LET	ALTERATION	DATE	BY
K	TRACED. NO WT. CHG.	9-20-43	WATERS

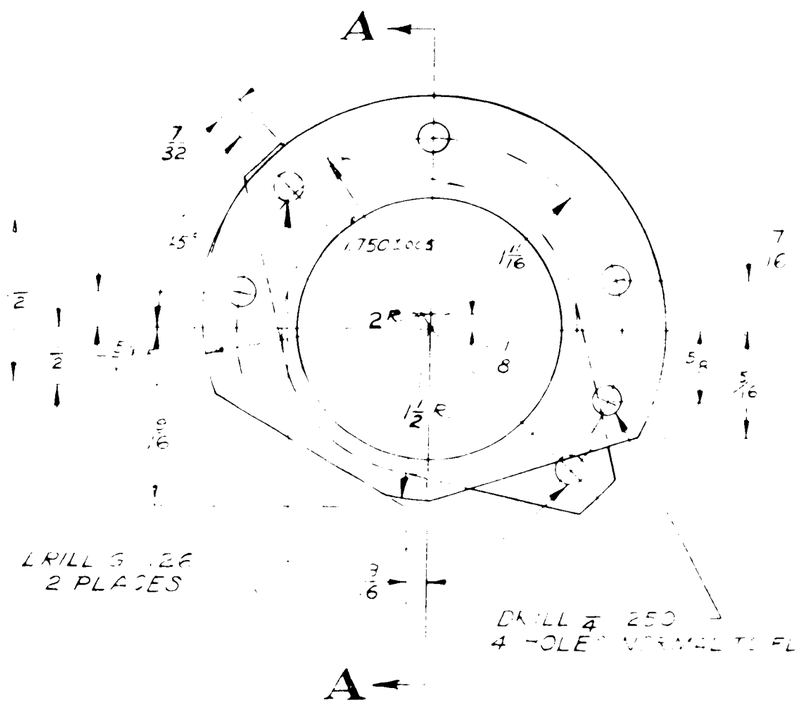

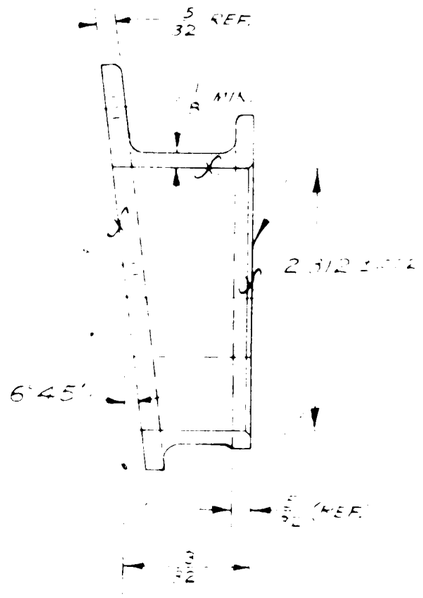

SECTION A-A

NOTES:

1. TRIM PART ON RADIUS WITH AT LEAST 3/16 BETWEEN EDGE OF PART & HOLE.
2. [illegible]

ASSY DASH NO.	MODEL	NEXT ASSY	REQ.
R	28-5AVN	28B5551	1
L	28-5AMN	28B5551	1
R	28-5AMC	28B5551	1
L	28-5AMC	28B5551	1
R	PBY-5A	28B5551	1
L	PBY-5A	28B5551	1

REQUIREMENTS PER AIRPLANE

REPLACES 10-11-40 28B5584 — .05 CALC. WT. — REPLACED BY — ACT. WT.

LIMIT DIMENSIONS UNLESS OTHERWISE SPECIFIED ± .010 — SCALE 12" : 1'0

STAMP PART NUMBER WHERE SHOWN

PART NO	STOCK	MATERIAL	SPEC	LH REQ. -0	RH REQ. -2	LH REQ. -3	RH REQ. -4	LH REQ. -5	RH
-R	MAKE FROM 28B5601R								
-L	MAKE FROM 28B5601L								

PARTS LIST PER ASSY.

A.C.				10-11-40	10-31-40		11-5-40	H.P.Z.	J.W.L.
NAVY 29,000 #/0	ZP-AP			E.H. ROBBINS	ROHM	GREEN	S.B.R.	11-6-40	
HEAT TREAT	FINISH			DRAFT	CHECK	STRUCT	MAT	APPROV	ENG

NAME HOUSING-TORQUE SHAFT-NOSE WHEEL DOOR-STA. #1

OPP. HAND -L

DWG SIZE D — 28B5584

CONSOLIDATED VULTEE AIRCRAFT CORP. SAN DIEGO DIVISION . . SAN DIEGO, CALIF.

FINISH CODE	
A	ALUMINIZED PRIMER

28B5584

E.O. A-11426

D	MISC. CHGS. PER -9 MAT. & SPEC. "Material" to read "PLEXIGLAS; COMM." To read "ADDED MFR'S. NOTE "B." PER T. BRG. ASP. TO DATE.	WT. CHG. NEG. 7-2-51

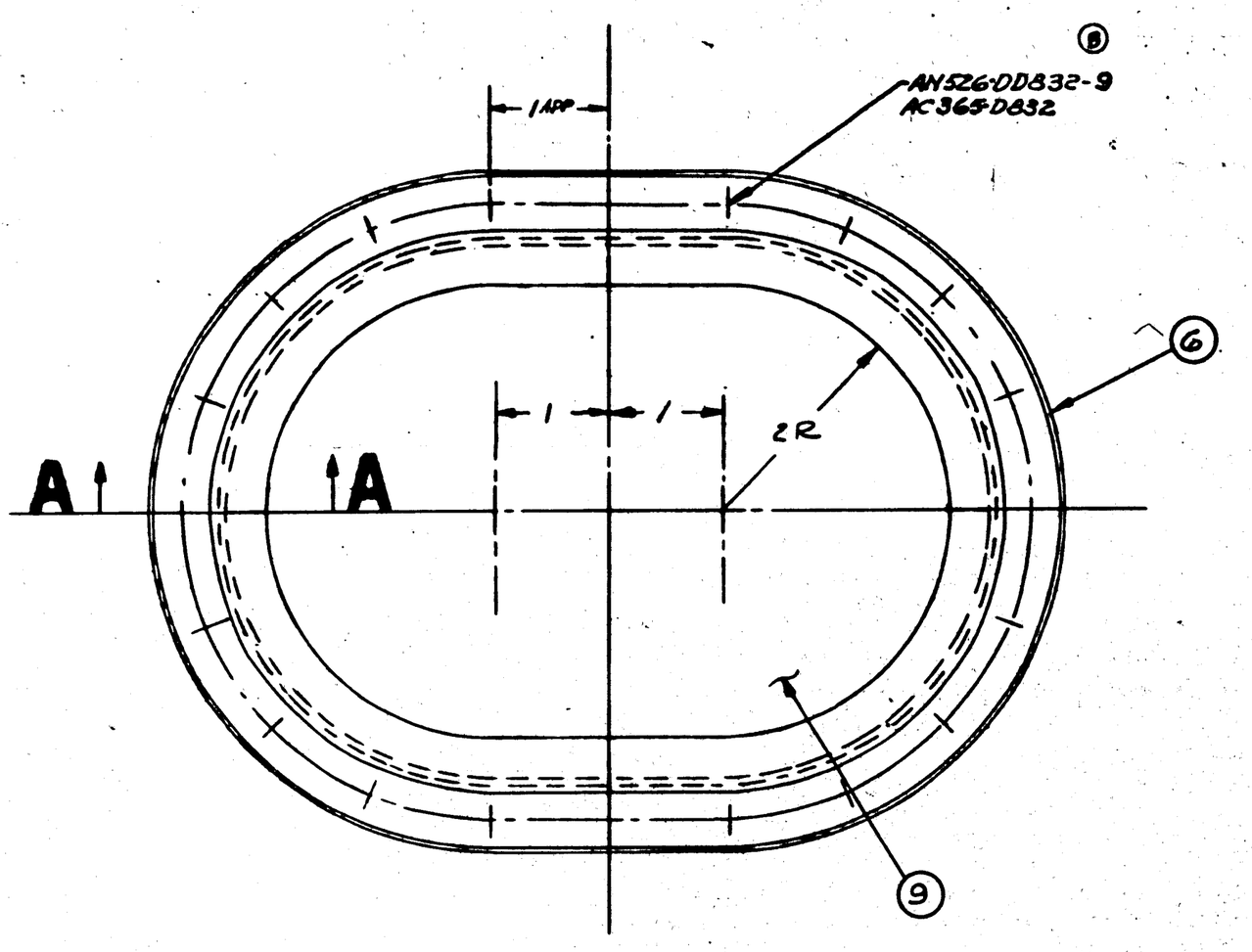

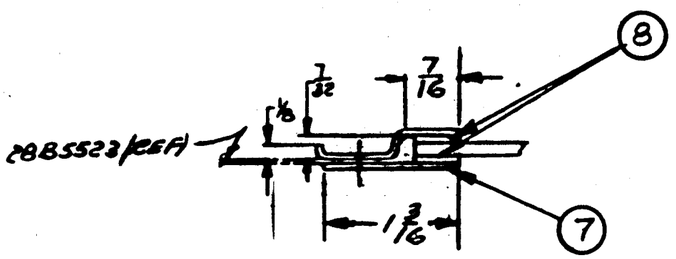

SECTION **A-A**

3-MAT'L. FOR -9 MAY BE-
(A) PLEXIGLAS, SPEC. P-41, GR. A, OR
(B) CELLULOSE ACETATE, SPEC. P-41, GR. B.

(B) — # NOTE — MATERIAL FOR -8
1.- ARMSTRONG CORK CO. CORRARENE #DC124, C.A.C. #CORR-1 SPEC. 316B.
2.- ATTACH WITH SYNTHETIC RESIN CEMENT (H. & F. EVERFAST OR EQUIV.) REF. CEMENT #3 MAT'L. MEMO #15.
(C)

NOTE!
HEAT TREAT COND. A MAT'L PER SPEC. SR597
FOR LOCATION SEE 28B5523

FINISH CODE

Z	[illegible]
P	P-17 Primer
AP	[illegible]
C	Cadmium Plate

AN526-DD832-9
AC365-D832

ASSY. DASH NO.	MODEL	NEXT ASSY.	REQ.
	28-SAMN	28B5523	2
	28-FAMC	28B5523	2
	PBY5A	28B5523	2

REQUIREMENTS PER AIRPLANE

REPLACED — .60 CALC. WT.
REPLACED BY — ASY. WT.

SCALE 12"=1.0"
+ 1/32
STAMP PART NUMBER WHERE SHOWN

PART NO.	SYSTEM	MATERIAL	SPEC.
-9	[illegible]	NOTED #	NOTED #
-8	[illegible]	[illegible]	STAR T
-7	[illegible]	[illegible]	STAR A
-6	051-10 x 13	ALCLAD	2024

PARTS LIST FOR ASSY.

LIT. DWG.	-0	-8	-9	-4	-6
DWG.					
DWG.					
LIT. DWG.					
DWG.					
LIT. DWG.					
DWG.					

AC
NAVY NOTED
HEAT TREAT
2-P-AP
FINISH

NAME WINDOW - HULL MAIN WHEEL WELL
CONSOLIDATED AIRCRAFT CORP. San Diego, Calif.

DRAFT: Frank
ENGR:
STRUCT:
SAY:
APPROV:
DWG:

OPP. HAND —
SIZE D
28B5531

LET	ALTERATION	DATE	BY

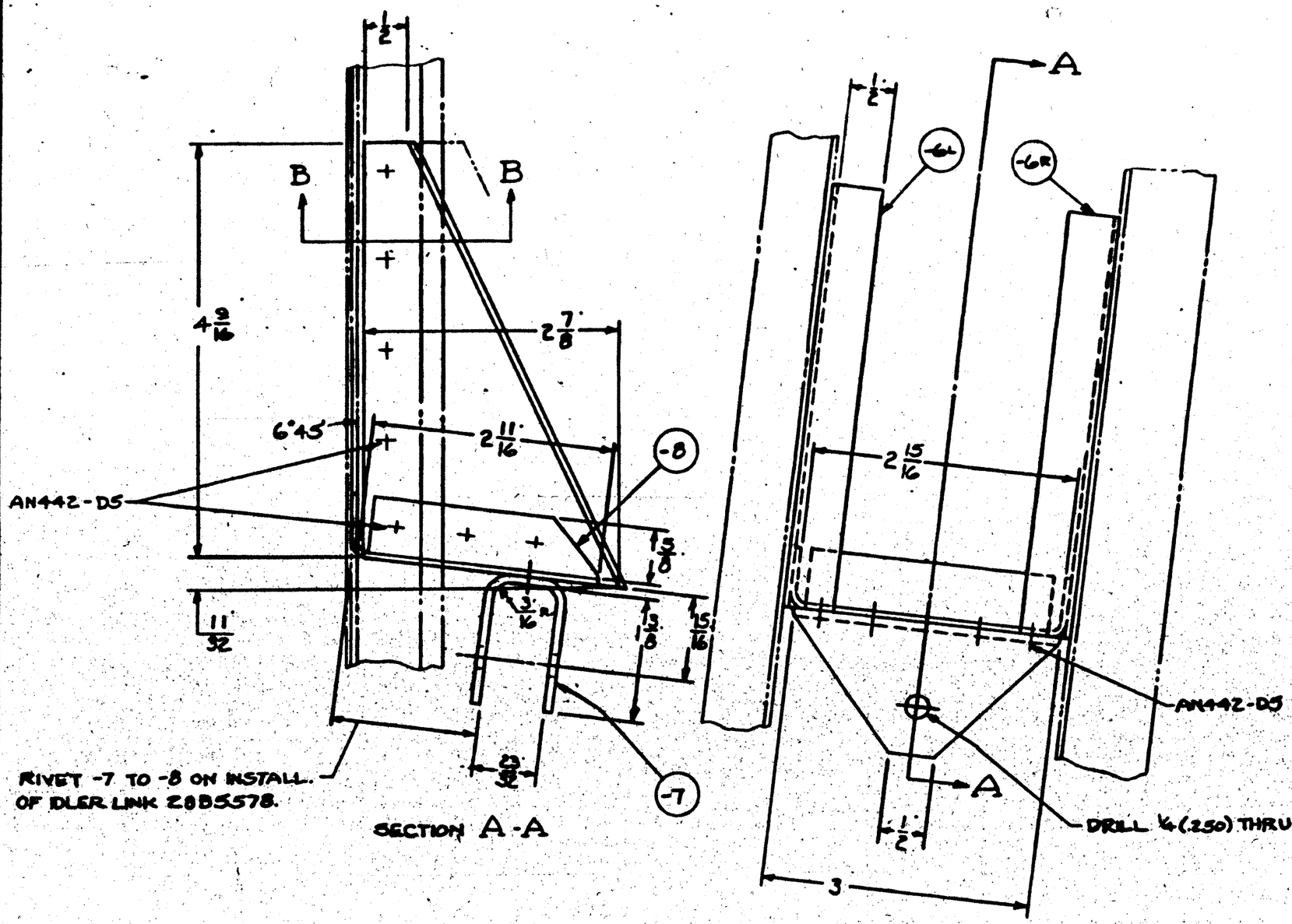

SECTION A-A

1/2 BEND RADII ON -6 L-R

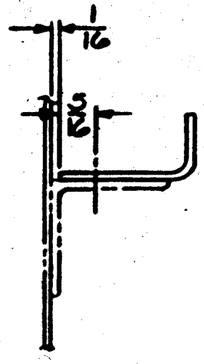

SECTION B-B

-7	PBY-5A	28B5578	2	
	OAV-1	28B5502	2	
	SB-SAMC	28B5502	2	
	PBY-5A	28B5520	2	
ASSY. DASH NO.	MODEL	NEXT ASSY.	QUAN.	

REQUIREMENTS PER AIRPLANE

REPLACES — 30 GRS WT.

REPLACED BY — ACT. WT.

UNLESS OTHERWISE SPECIFIED DIMENSIONS ARE ± 1/32 ANGLES ± 1/2° — SCALE 12"=1'0" — STAMP PART NUMBER WHERE SHOWN

AN442-D5

PART No.	STOCK	MATERIAL	SPEC.	LH REQ'D	RH REQ'D	LH REQ'D	RH REQ'D	LH REQ'D	RH REQ'D	LH REQ'D	RH REQ'D	LH REQ'D	RH REQ'D
PARTS LIST PER ASSY.				-0		-2		-3		-4		-5	
-8	.064 x 3 1/4 x 4 3/8	ALCLAD	24S-T	1									
-7	.051 x 3 1/2 x 3 3/4	ALCLAD	24S-T	1									
-6L	.064 x 3 x 4	ALCLAD	24S-T	1									
-6R	.064 x 3 x 4	ALCLAD	24S-T		1								

AC — NAVY SR-83 — HEAT TREAT — FINISH — DRAFT — CHECK — STRUCT. — MAT — APPROV. — ENG.

NAME SUPPORT IDLER LINK - STA. 1 - NOSE WHEEL DOORS

CONSOLIDATED AIRCRAFT CORP. SAN DIEGO, CALIF.

OPP. HAND

SIZE B — 28B5592

LET	ALTERATION	DATE	BY

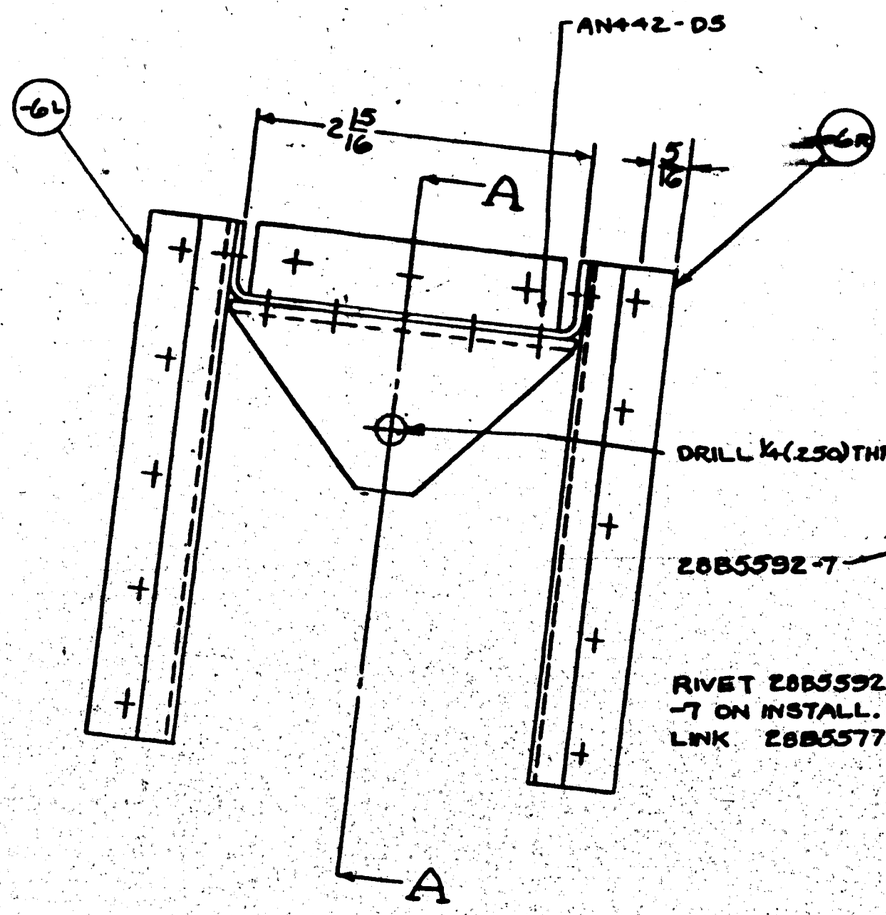

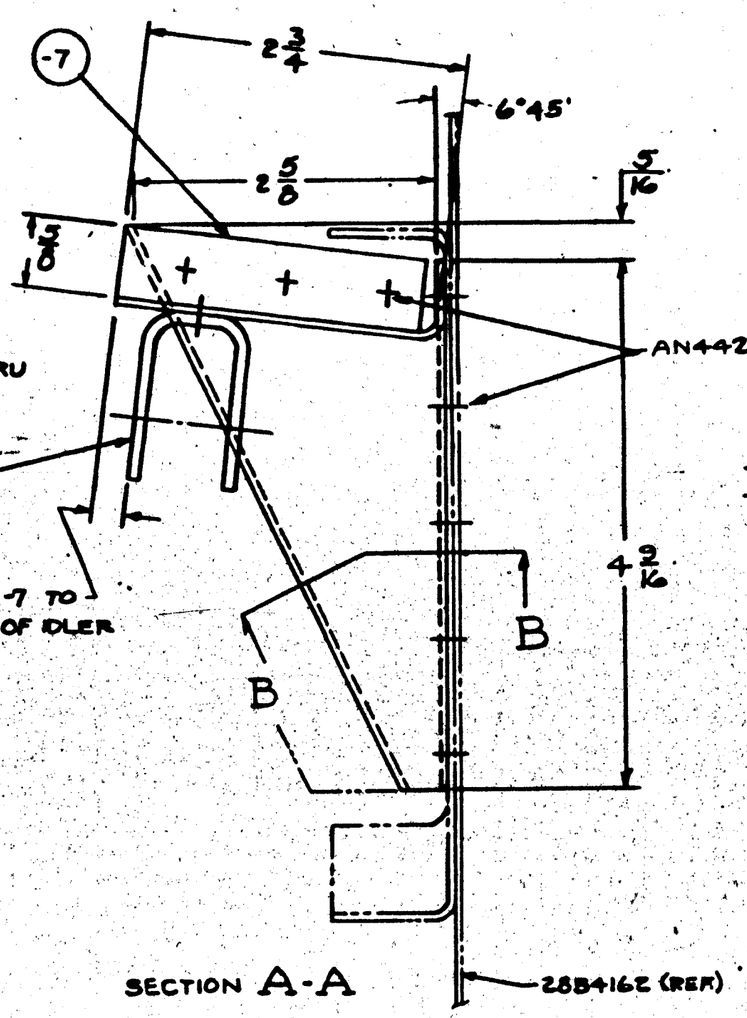

⅛" BEND RADII

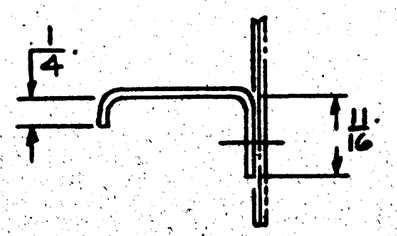

SECTION B-B

FINISH CODE	
Z	ANODIC TREATMENT
P	R-27 PRIMER
AP	ALUMINIZED PRIMER
C	CADMIUM PLATE

GP-GREEN PRIME

ASSY. DASH NO.	MODEL	PART ASSY.	REQ.
	OAU-1	28B5592	2
	88-GAMIC	28B5592	2
	PBY-5A	28B5592	2

REQUIREMENTS PER AIRPLANE

REPLACES — .30 GALS. WT.

REPLACED BY — ACT. WT.

SCALE 12" = 1'-0"

AN442-D5

28B5592-7

PART No.	STOCK	MATERIAL	SPEC.	LH REQ.	RH REQ.	LH REQ.	RH REQ.	LH REQ.	RH REQ.	LH REQ.	RH REQ.
PARTS LIST PER ASSY.				-0		-2		-3		-4	-5
-7	.064 × 3½ × 4½	ALCLAD	47A8	A		1					
-6R	.064 × 4½ × 5½	ALCLAD	47A8	A		1					
-6L	.064 × 4½ × 5½	ALCLAD	47A8	A		1					

AC		10-17-40					
NAVY 3R-93	Z-P-2GP	W. H.					
HEAT TREAT	FINISH	DRAFT	CHECK	STRUCT.	MAT	APPROV.	ENG.

NAME SUPPORT
IDLER LINK-STA. "2 - NOSE WHEEL DOORS

OPP. HAND

CONSOLIDATED AIRCRAFT CORP. San Diego, Calif.

DWG. D SIZE — 28B5593

LET	ALTERATION	DATE	BY

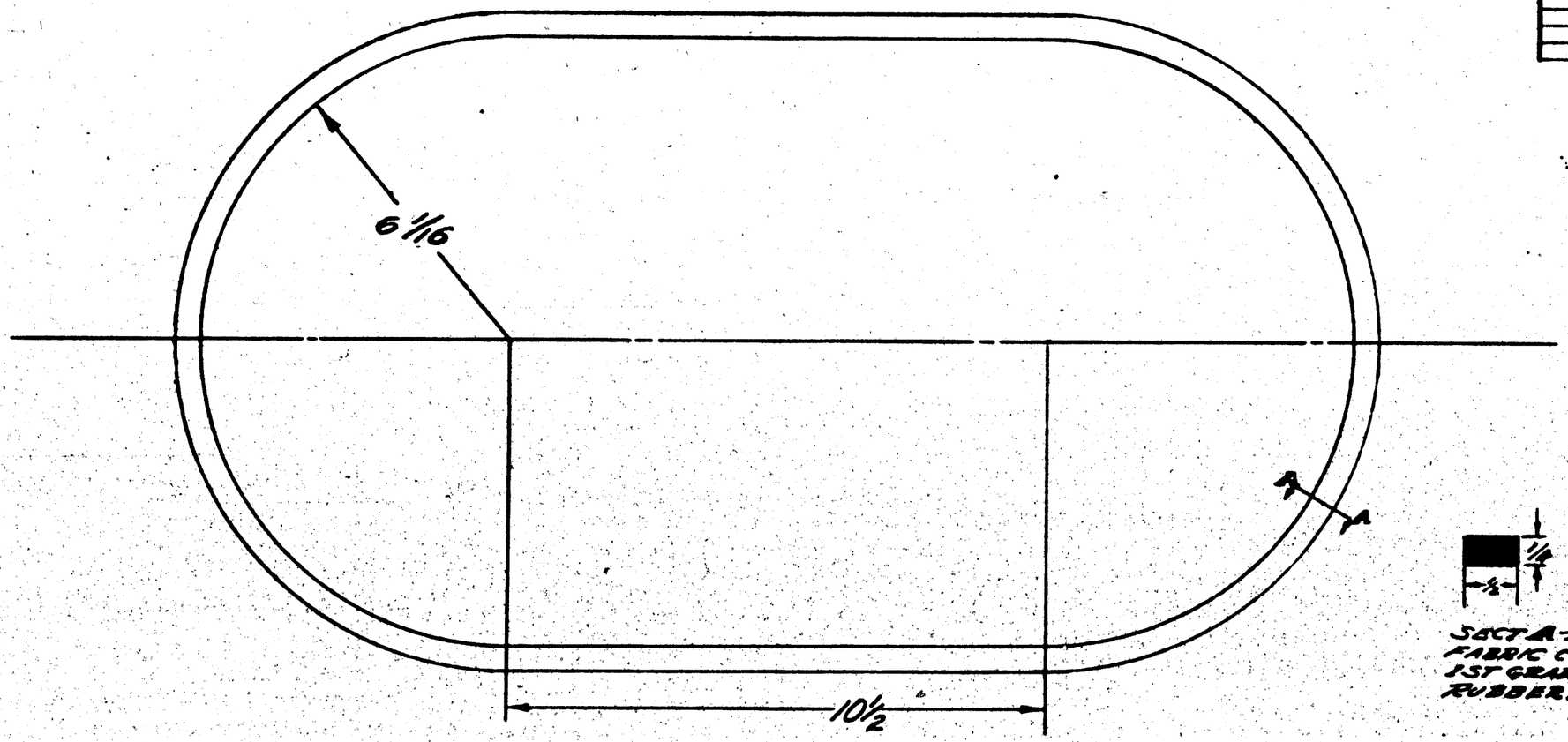

SECT A-A
FABRIC COVERED PALE CREPE
1ST GRADE-3-V BLOW STRONG
RUBBER. COVERED TO CAC SPEC.

NOTE:
TO BE USED ON SHIPS
#2486, 2487 & 2488 ONLY.

ASSY. DASH No.	MODEL	NEXT ASSY.	QUAN.
	PBY-5A	PBY-5A/L	

REQUIREMENTS PER AIRPLANE

REPLACES — CALC WT. 12

REPLACED BY — ACT. WT.

SCALE 6"=1'0"

+ 1/32

STAMP PART NUMBER WHERE SHOWN

PART No.	STOCK	MATERIAL	SPEC.	LH RH REQ. -0	LH RH REQ. -2	LH RH REQ. -3	LH RH REQ. -4	LH RH REQ. -5
		Neoprene						

PARTS LIST PER ASSY.

A.C.		MATERIAL	A-D					
NAVY None								
HEAT TREAT	FINISH	DRAFT	CHECK	STRUCT.	MAT	APPROV.	ENG.	

NAME GASKET-VERTICAL CAMERA DOOR-WATER TIGHT

OPP. HAND NONE

CONSOLIDATED AIRCRAFT CORP. SAN DIEGO, CALIF.

SIZE D

28B5594

LET	ALTERATION	DATE	BY

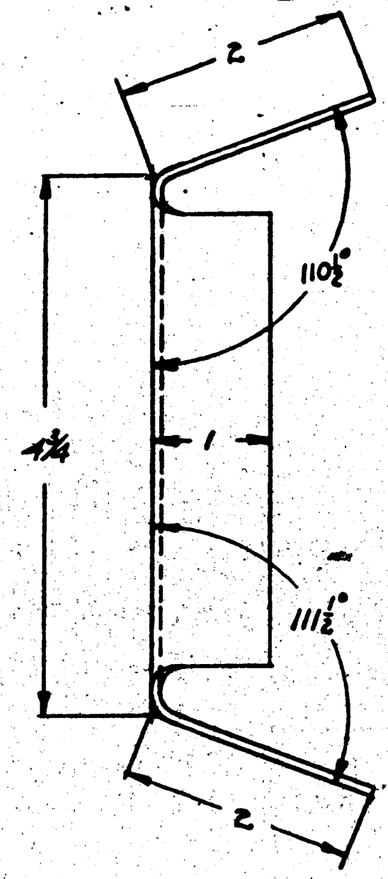

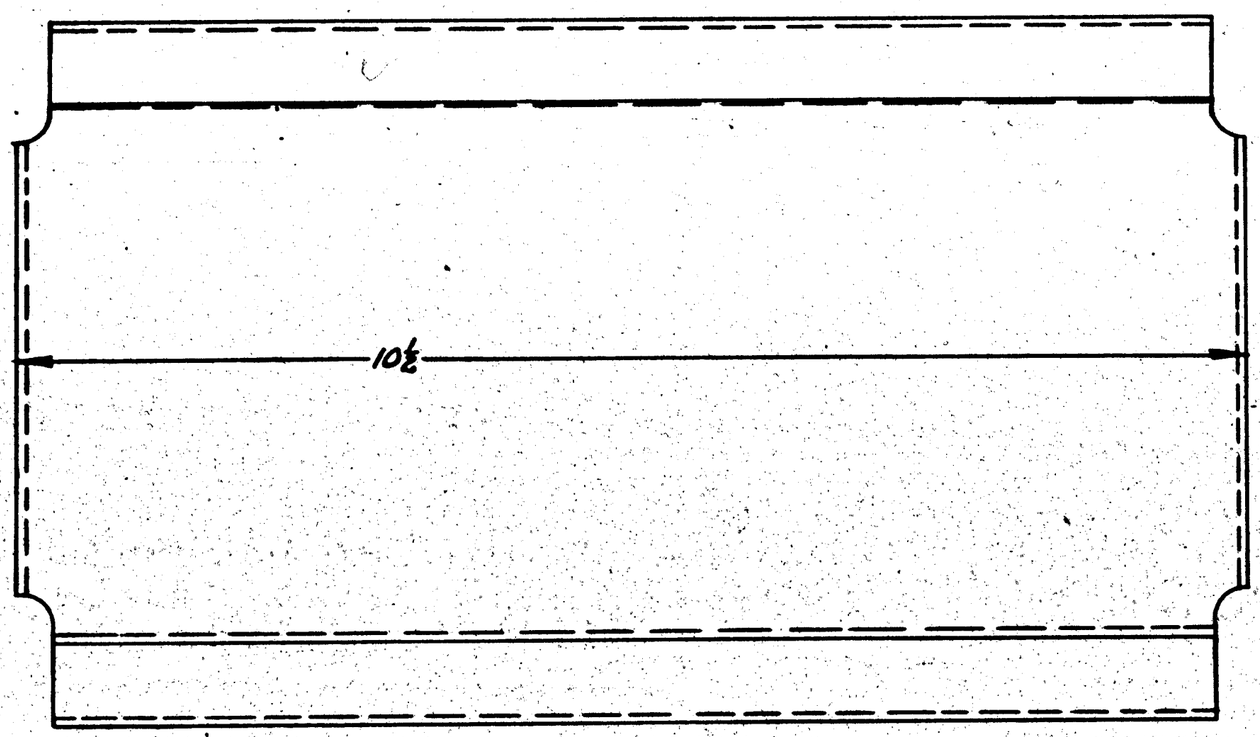

ALL BEND RADII 3/16

FINISH CODE	
Z	ANODIC TREATMENT
P	P-27 PRIMER
AP	ALUMINIZED PRIMER
C	CADMIUM PLATE

ASSY. SUBASSY. No.	MODEL	NEXT ASSY.	REQ.
	OAU-1	28A55231	1
	OAU-1	28A5523	1
	28-SANC	28A55230	1
	28-SANC	[illegible]	1
	PBY-5A	[illegible]	1
	PBY-5A	[illegible]	1

REQUIREMENTS PER AIRPLANE

REPLACES	.76 Grams Wt.
REPLACED BY	Assy. Wt.
CUT TO DIMENSIONS SHOWN	SCALE 12" = 1'0"

PART No.	STOCK	MATERIAL	SPEC.		LH REQ.	RH REQ.	LH REQ.	RH REQ.	LH REQ.	RH REQ.	LH REQ.	RH REQ.	LH REQ.	RH REQ.
PARTS LIST PER ASSY.					-0		-2		-3		-4		-5	
-1	.040X9 X 15	ALCLAD	4248 T	1										

AC				APPROVED	M V	GREEN						JAM
NAVY NONE	2 - P-AP			CHECKED	LOC							
HEAT TREAT	FINISH			DRAFT	GREEN	STREET	DAY	APPROVED	DWG.			

NAME STIFFENER - NULL - MAIN WHEEL WELL

CONSOLIDATED AIRCRAFT CORP. SAN DIEGO, CALIF.

OPP. NAME NONE

DWG. D 28B5595

R

LET	ALTERATION	DATE	BY
H	TRACED NO WT. CHG.	10-6-43	ADEER

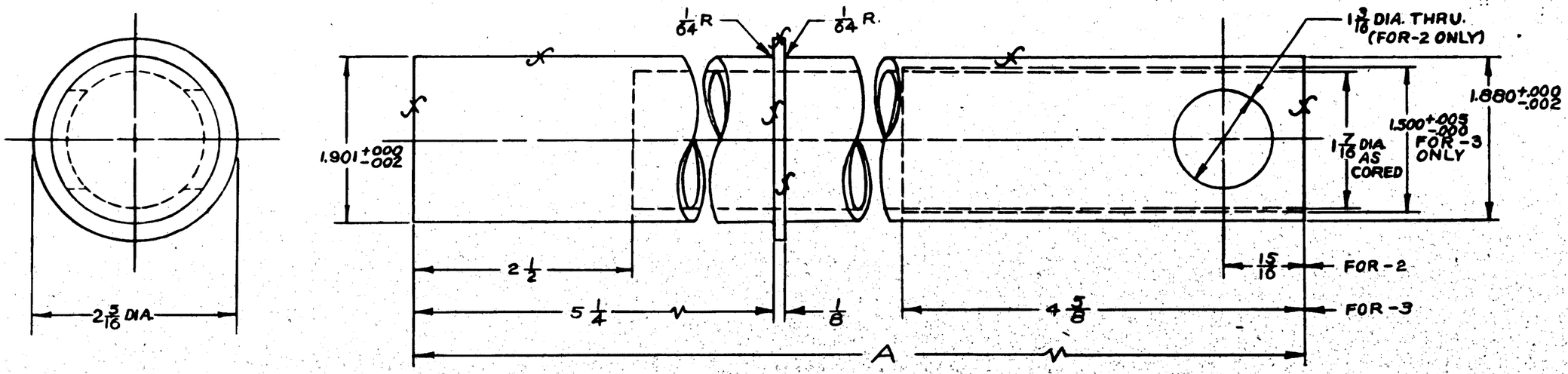

	-0	-2	-3
A	13 1/2	13 5/16	13 1/2

NOTE:
1. TOLERANCE ON ROUGH CASTING ±1/32 MACHINED SURFACES ±.010 UNLESS OTHERWISE SPECIFIED
2. FINISH
   POLISH OUTSIDE
   CADIUM PLATE

DASH NO.	WT.
-0	578
-2	545
-3	578

FINISH CODE	
Z	ANODIC TREATMENT
P	P-27 PRIMER
GP	GREEN PRIMER
C	CADMIUM PLATE

C# NOA(S) 464
MCR 148-5
C70496, 77713 & 88476 ONLY

THIS DWG. RUSH
RELEASED CHANGE
A 9-23-41

ASSY. DASH NO.	MODEL	NEXT ASSY.	REQ.
-3	PBY-5A	28B5520	1
-2	PBY-5A	28B5520	1
-0	PBY-5A	28B5520	1
-2	28-5AMC	28B5520	1
-0	28-5AMC	28B5520	1
-2	28-5AMN	28B5520	1
-0	28-5AMN	28B5520	1

REQUIREMENTS PER AIRPLANE

REPLACES 28B5600 9-22-43 — CALC. WT. NOTED
REPLACED BY — ADV. WT.
SCALE 12"=1'-0"
NOTED
STAMP PART NUMBER WHERE SHOWN

PART No.	STOCK	MATERIAL	SPEC.	LH REQ.	RH REQ.	LH REQ.	RH REQ.	LH REQ.	RH REQ.	LH REQ.	RH REQ.	LH REQ.	RH REQ.
-3	CASTING	LUMEN 20											
-2	CASTING	LUMEN 20											
-0	CASTING	LUMEN 20											

PARTS LIST PER ASSY.

AC / NAVY		10-21-42	LUG	BMW 2.11-28		
	NOTED	R.H. ROBERTS	ROHN J.F.R.	GREEN JFR		GLE
HEAT TREAT	FINISH	DRAFT	CHECK	STRUCT. MAT	APPROV	ENG.

NAME SHAFT TORQUE TUBE EXT.-NOSE WHEEL DOORS
OPP. HAND
CONSOLIDATED VULTEE AIRCRAFT CORP. SAN DIEGO DIVISION . . SAN DIEGO, CALIF.
DWG. SIZE D — 28B5600

28B5600 R

LET	ALTERATION	DATE	BY
A	[illegible]		
	[illegible]	12-1943	[illegible]

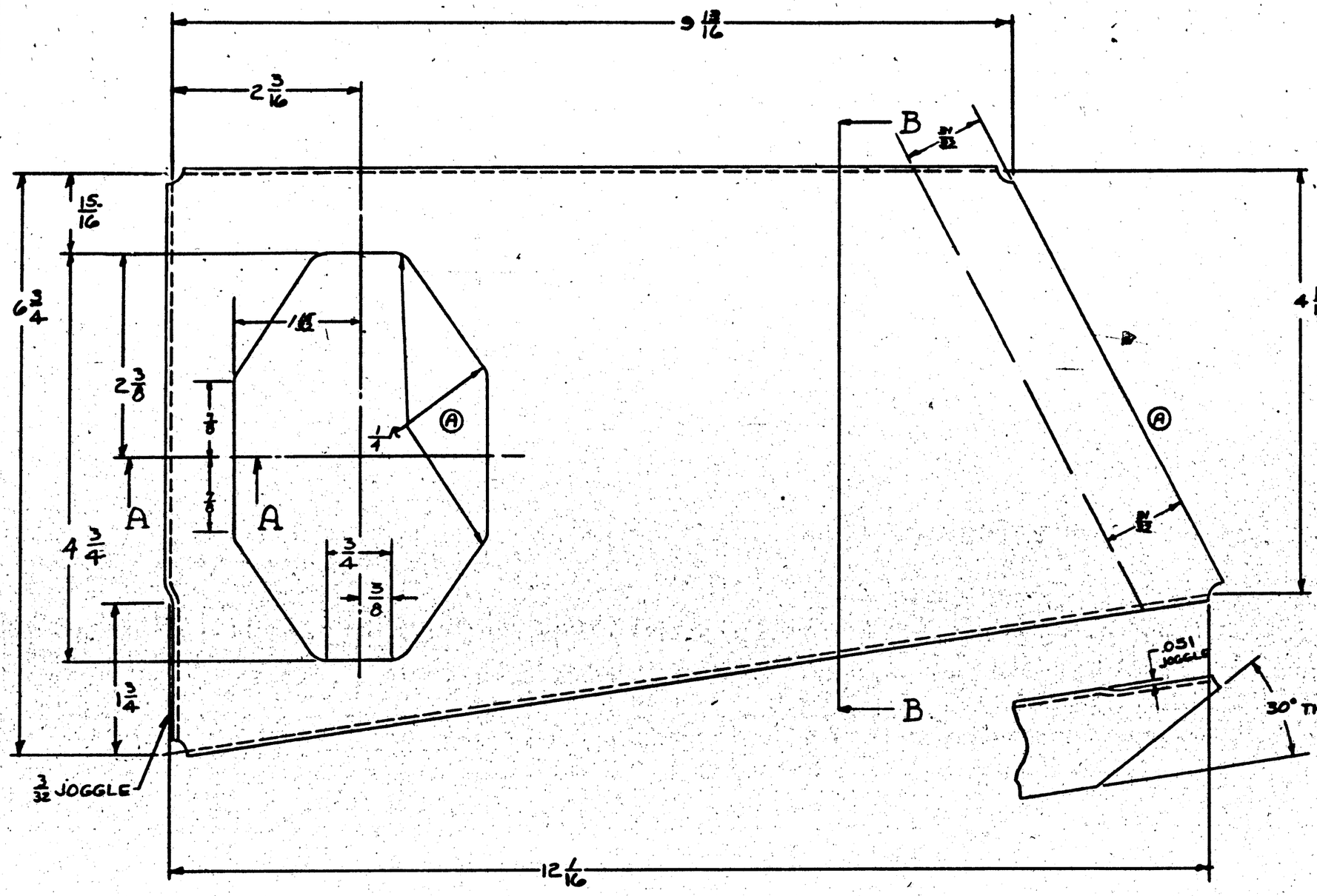

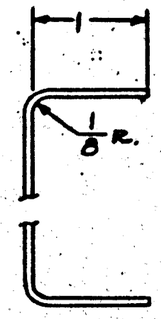

SECTION B-B

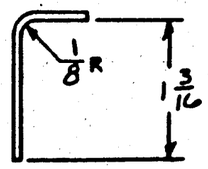

SECTION A-A

FINISH CODE

Z	ANODIC TREATMENT
P	P-37 PRIMER
AP	ALUMINIZED PRIMER
C	CHROMIUM PLATE

R	OAU-1	28B4103-303	1
L	OAU-1	28B4103-304	1
R	28-5AN/C	28B4103-305	1
L	28-5AN/C	28B4103-306	1
R	PBY-5A	28B4103-	1
L	PBY-5A	28B4103-	1

ASSY. DASH NO.	MODEL	NEXT ASSY.	REQ
REQUIREMENTS PER AIRPLANE			

REPLACED .45 CALC. WT.

REPLACED BY ACT. WT.

SCALE 12" = 1'0"

± V32

(CHECK PART NUMBER WHERE SHOWN)

PART NO.	STOCK	MATERIAL	SPEC.	LH REQ.	RH REQ.	LH REQ.	RH REQ.	LH REQ.	RH REQ.	LH REQ.	RH REQ.	LH REQ.	RH REQ.
	.064 x 9 x 13 3/4	ALCLAD	2788 A										
PARTS LIST PER ASSY.				-0		-2		-3		-4		-5	

AC								
NAVY SR-53	Z-P		LOFT	CHECK	STRUCT.	MAT	GROUP	ENGR.
HEAT TREAT	FINISH	DRAFT						

NAME GUSSET
BULKHEAD-STA #2-BOTTOM

OPP. HAND -R

CONSOLIDATED AIRCRAFT CORP. SAN DIEGO, CALIF.

DWG. D

28B5602

LET	ALTERATION	DATE	BY

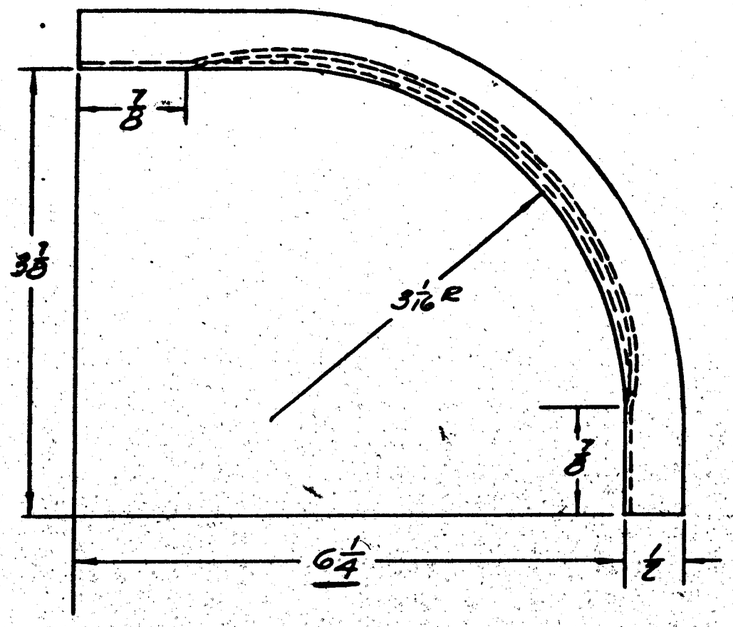

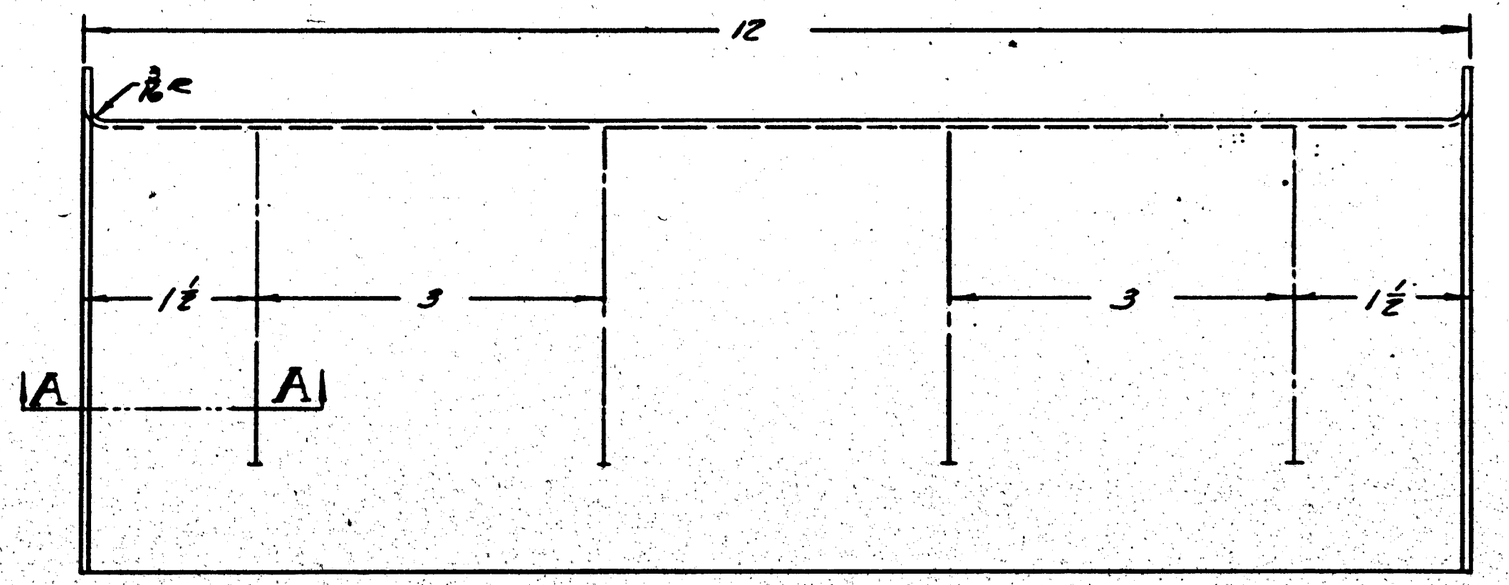

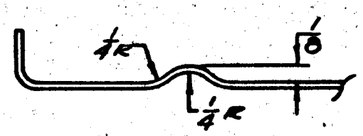

SECTION A-A

NOTE:-
FOR HOLES SEE 2885603

FINISH CODE

Z	ANODIC TREATMENT
P	P-27 PRIMER
AP	ALUMINIZED PRIMER
C	CADMIUM PLATE

ASSY. DASH NO.	MODEL	NEXT ASSY	REQ
	OAC-1	2885603	1
	28-SAME	2885603	1
	PBY-5A	2885603	1

REQUIREMENTS PER AIRPLANE

REPLACES — CMD. WT. .48#

REPLACED BY — ACT. WT.

SCALE 18"=1'-0"

UNLESS OTHERWISE SPECIFIED ± 1/32

STAMP PART NUMBER WHERE SHOWN

PART No.	STOCK	MATERIAL	SPEC.	LH REQ. -0	RH REQ. -2	LH REQ. -3	RH REQ. -4	LH REQ. -5	RH REQ. -6
	.051 X 24 X 31/2	ALCLAD	4430-CONDA						

PARTS LIST PER ASSY.

A C		HARDEN	COVERED
NAVY 3R53	Z-P-ZAP	10-24-41	L.S. 5 Jan
HEAT TREAT	FINISH	DRAFT	CHECK / STRUCT. / MAT / APPROV / ENG.

NAME COVER - HULL - NOSE WHEEL DOOR JACK MECH

CONSOLIDATED AIRCRAFT CORP. San Diego, Calif.

OPP. HAND

ENG. D DWG. R

2885604

E.O. 28632
F.O 30856

LET	ALTERATION	CHK	BY
A	5/16 (WAS 3/8)		

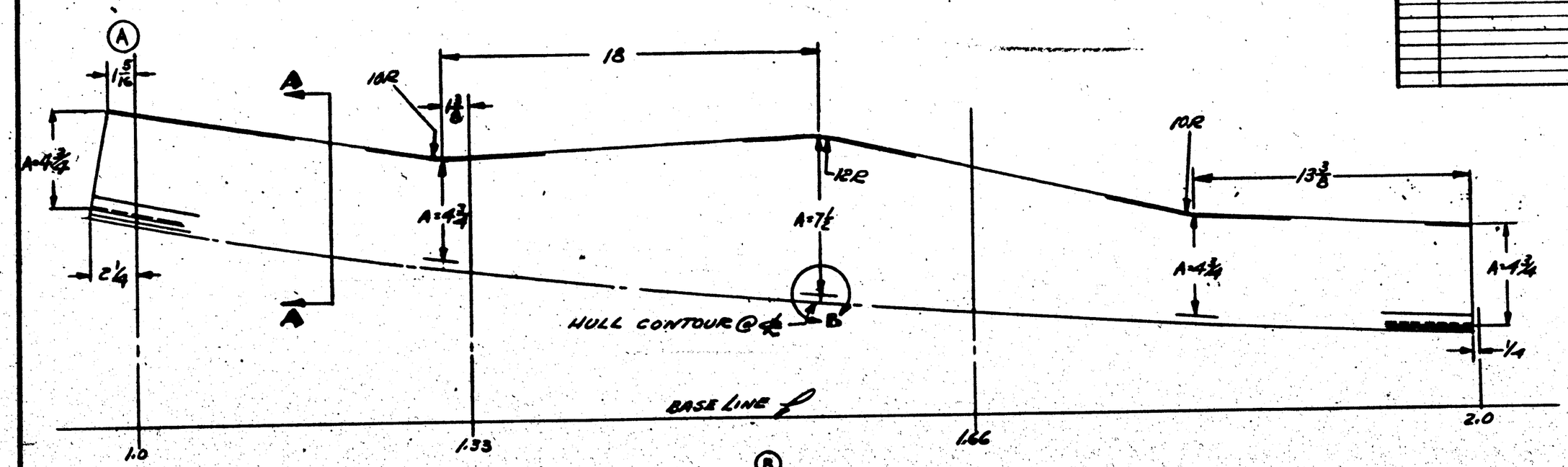

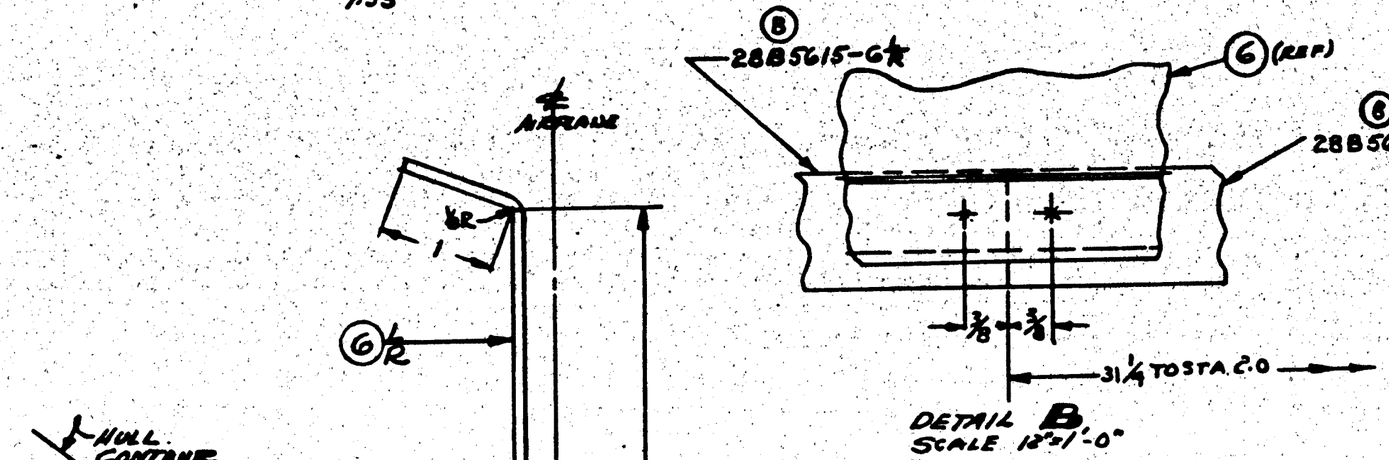

DETAIL B
SCALE 12"=1'-0"

SECTION A-A
TYPICAL
SCALE 12"=1'-0"

FINISH CODE	
Z	ANODIC TREATMENT
P	P-27 PRIMER
AP	ALUMINIZED PRIMER
C	CADMIUM PLATE

ASSY. DASH NO.	MODEL	NEXT ASSY.	REQ.
OR	OAU-1	28B5606R	1
OL	OAU-1	28B5606L	1
OR	28-SAMC	28B5606R	1
OL	28-SAMC	28B5606L	1
OR	PBY5A	28B5606R	1
OL	PBY5A	28B5606L	1

REQUIREMENTS PER AIRPLANE

REPLACES — REPLACED BY — SCALE 3"=1'-0" 12"=1'-0" — 54 CALC. WT. — ACT. WT.

+ 1/32

OTHER PART NUMBER WHERE SHOWN

04303-DG
28B5615-6
-7

PART NO.	STOCK	MATERIAL	SPEC.	LH REQ.	RH REQ.	LH REQ.	RH REQ.	LH REQ.	RH REQ.	LH REQ.	RH REQ.
-6	.090 x 10 x 68	ALCLAD	17ABA								
-7	.071 x 10 x 68	ALCLAD	17ABA								
	PARTS LIST PER ASSY.			-0	-2	-3	-4	-5			

A C
NAVY SAE 537
HEAT TREAT

E-P
FINISH

Bond 4/23/40
DRAFT

4/23/40
CHECK | STRUCT. | MAT | APPROV | ENG.

NAME INBOARD BEAM - HULL - NOSE WHEEL DOOR

OPP. HAND 28B5607-R

CONSOLIDATED AIRCRAFT CORP. SAN DIEGO, CALIF.

SIZE D

28B5607

R

LET	ALTERATION	DATE	BY

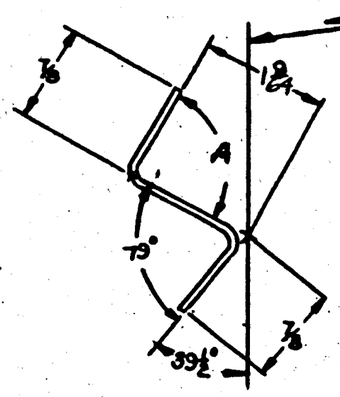

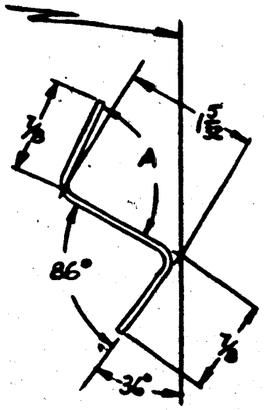

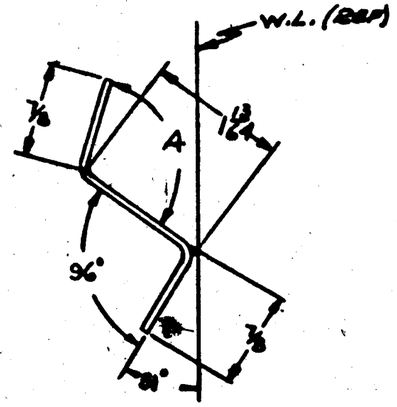

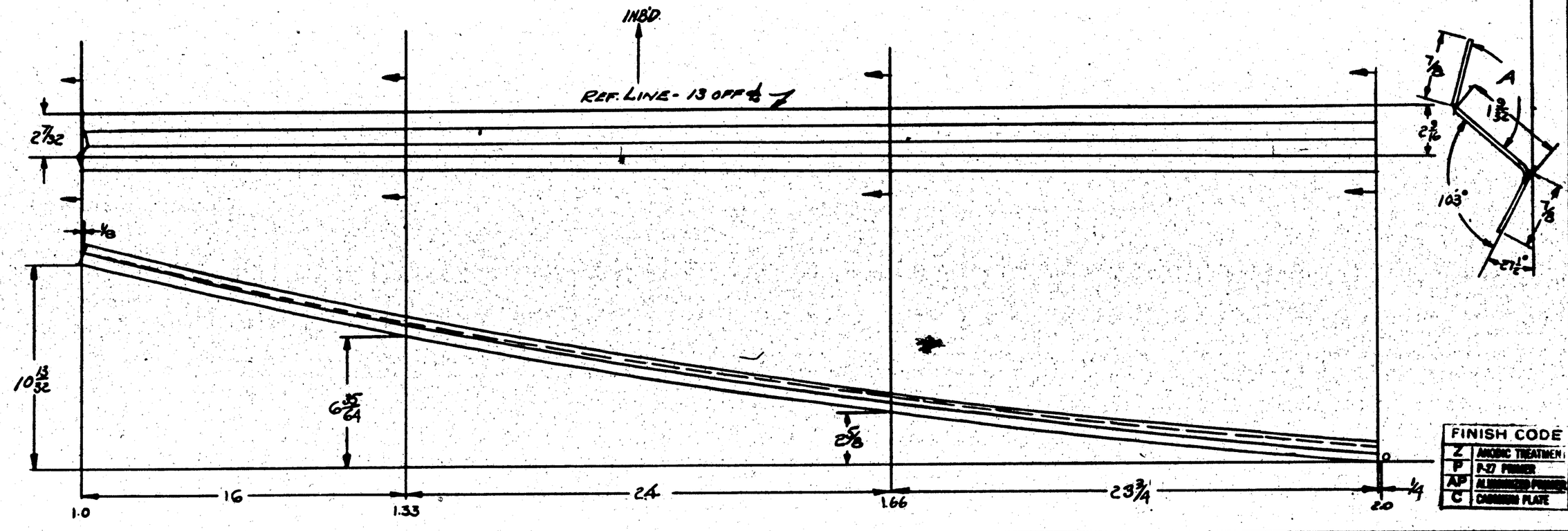

FINISH CODE	
Z	ANODIC TREATMENT
P	P-17 PRIMER
AP	ALUMINIZED PRIMER
C	CADMIUM PLATE

ALL BEND RADII 1/8
ANGLE MARKED "A" TO SUIT INBOARD SURFACE OF DOOR.

ASSY. DASH NO.	MODEL	NEXT ASSY.	REQ.
R	OAU-1	28B5606R	1
L	OAU-1	28B5606L	1
R	28-3AMC	28B5606R	1
L	28-3AMC	28B5606L	1
R	P8Y3A	28B5606R	1
L	P8Y3A	28B5606L	1

REQUIREMENTS PER AIRPLANE

REPLACES — CHG. WT. 1.2

REPLACED BY — ADV. WT.

SCALE 3"/1'0" 1/8"=1'0"

STAMP PART NUMBER WHERE SHOWN

PART No.	STOCK	MATERIAL	SPEC.	LH REQ.	RH REQ.	LH REQ.	RH REQ.	LH REQ.	RH REQ.	LH REQ.	RH REQ.	LH REQ.	RH REQ.
	.064x3/8 x66	ALCLAD	47A8 A	1									
PARTS LIST PER ASSY.				-0		-2		-3		-4		-5	

A C		Tweed	
NAVY SR53T	Z - P	10/13/40	LOC
HEAT TREAT	FINISH	DRAFT	CHECK

STRUCT.	MAT	APPROV.	ENG.

NAME OUTBOARD BEAM - HULL - NOSE WHEEL DOOR

OPP. HAND 28B5608-R

CONSOLIDATED AIRCRAFT CORP. SAN DIEGO, CALIF.

SIZE D — DWG. NO. 28B5608

R

LET	ALTERATION	DATE	BY
A	ADDED 1/16 RAD. TO -6 & -8.	12-2-42	[illegible]
B	REVISED -6 & -8. ADDED NOTE, "ALL--- NOTED." NO WT. CHG.	6-21-43	[illegible]

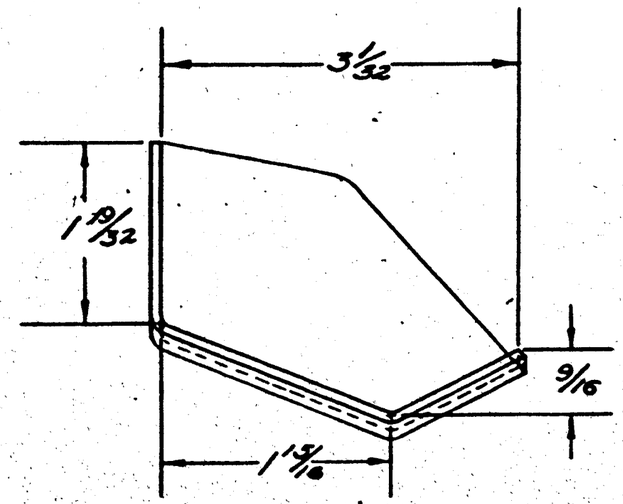

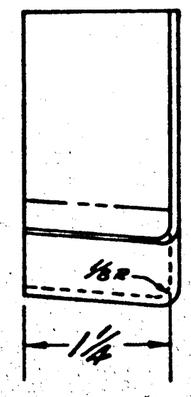

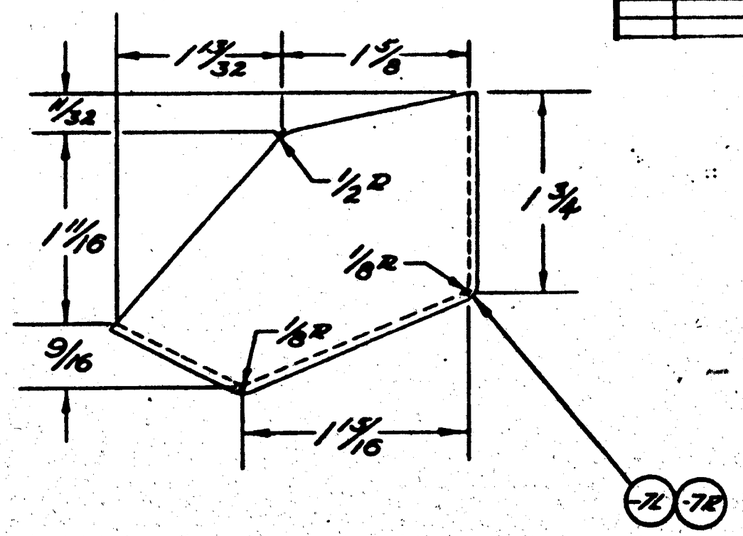

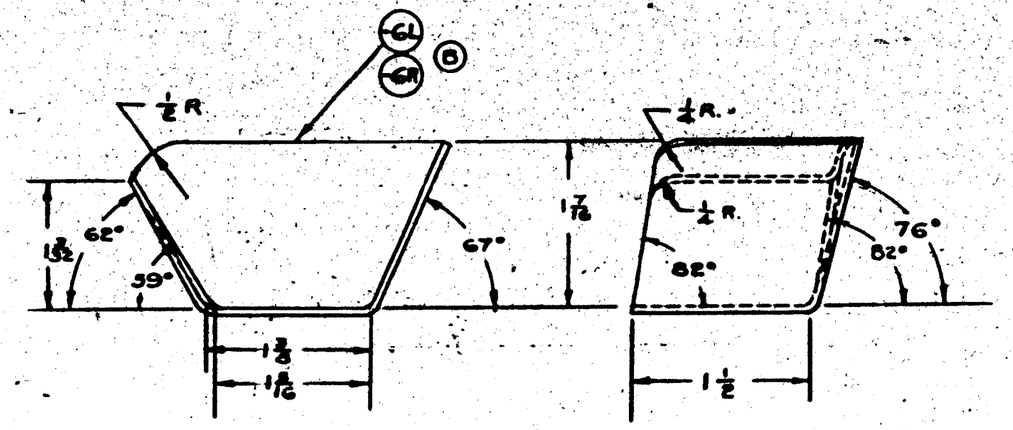

NOTE:
ALL BEND RADII 1/8 UNLESS NOTED.

ABBY. DASH NO.	MODEL	NEXT ASSY.	REQ.
-7R	28-3AMN	28B5522	1
-7L	28-3AMN	28B5522	1
-6R	28-3AMN	28B5522	1
-6L	28-3AMN	28B5522	1
-7R	28-4AMC	28B5611	1
-7L	28-4AMC	28B5611	1
-7R	ONU-1	28B5611	1
-7L	ONU-1	28B5611	1
-7R	PBY-5A	28B5611	1
-7L	PBY-5A	28B5611	1
-6R	28-3AMO	28B5611	1
-6L	28-3AMC	28B5611	1
-6R	ONU-1	28B5611	1
-6L	ONU-1	28B5611	1
-6R	PBY-5A	28B5611	1
-6L	PBY-5A	28B5611	1

REQUIREMENTS PER AIRPLANE

REPLACES: -6 - 33; -7 - 67 Cons. Div.

REPLACED BY: Adv. Wt.

UNLESS OTHERWISE SPECIFIED ± 1/32

SCALE 12" = 1'0"

STAMP PART NUMBER WHERE SHOWN

PART No.	STOCK	MATERIAL	SPEC.		LH REQ.	RH REQ.	LH REQ.	RH REQ.	LH REQ.	RH REQ.	LH REQ.	RH REQ.	LH REQ.	RH REQ.
					-0		-2		-3		-4		-5	
-7L	.064 x B&S	ALCLAD	2024	A										
-7R	.064 x B&S	ALCLAD	2024	A										
-6R	.064 x 787	ALCLAD	2024	A										
-6L	.064 x 787	ALCLAD	2024	A										

PARTS LIST PER ASSY.

FINISH CODE	
Z	ANODIC TREATMENT
P	A-27 PRIMER
AP	[illegible] PRIMER
C	CHROMIUM PLATE

AC

NAVY SP.S2 — Z.R

HEAT TREAT — FINISH — DRAFT — LOC — STRUCT. — SHEET — ASSEM. — DWG.

NAME WATER TIGHT CUPS -HULL-BULK."E2

OPP. HAND Noted

CONSOLIDATED AIRCRAFT CORP. San Diego, Calif.

DWG. D 28B5611

PBY5A, 28-5AMC, OA-10 E.O. 31705
E.O. A31255

LET	ALTERATION	DATE	BY
A	CHANGE [illegible]	[illegible]	[illegible]
	[illegible] WAS [illegible]		
B	DRILL 5/16 (.177) C'SK 82° A .312 WAS DRILL 9/64 (.177) C'SK 82° A .312		
	MS WT CHG 4-11-45		

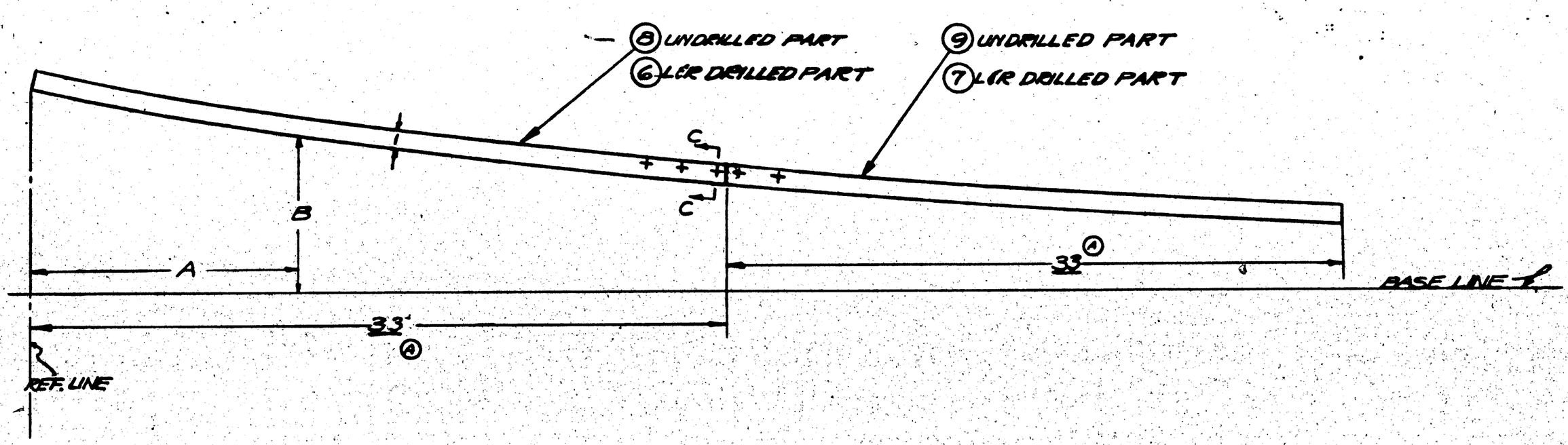

CONTOUR COORDINATES	
A	B
2 1/4	9 3/16
6 1/4	9 1/32
10 1/4	8 1/2
14 1/4	7 3/32
18 1/4	7 3/32
24 1/4	6 3/32
30 1/4	6 1/32
36 1/4	5 1/4
42 1/4	5 3/32
50 1/4	4 1/32
58 1/4	4 3/16
66	3 3/32

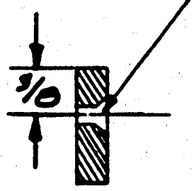

SECTION: CC
FULL SIZE

B DRILL 5/16 (.177) C'SK 82° x .312
THESE HOLES TO BE LOCATED BY TEMPLATE - REF 28B5606

PURCHASE TO DWG.

MODEL	NEXT ASSY.
REQUIREMENTS PER AIRPLANE	
REPLACES 28B5607-7 & 28B5607-8	.95 GRAD. WT.
REPLACED BY	ADV. WT.
SCALE 3" = 1'0"	

PART No.	STOCK	MATERIAL	SPEC.	LIS	LIS	LIS	LIS	LIS
PARTS LIST PER ASSY.				-0	-2	-3	-4	
-9	1/4 THICK	[illegible]	[illegible]					
-8	1/4 THICK	[illegible]	[illegible]					
-7	MAKE FROM -9							
-6	MAKE FROM -8							

A C
NAVY NONE
HEAT TREAT | FINISH | DRAFT

NAME RUBBING STRIP - HULL - M&B BEAM NOSE WHEEL DOOR
CONSOLIDATED AIRCRAFT CORP. San Diego, Calif.

OPP. HAND NOTED
SIZE D
28B5615

LET	ALTERATION	DATE	BY

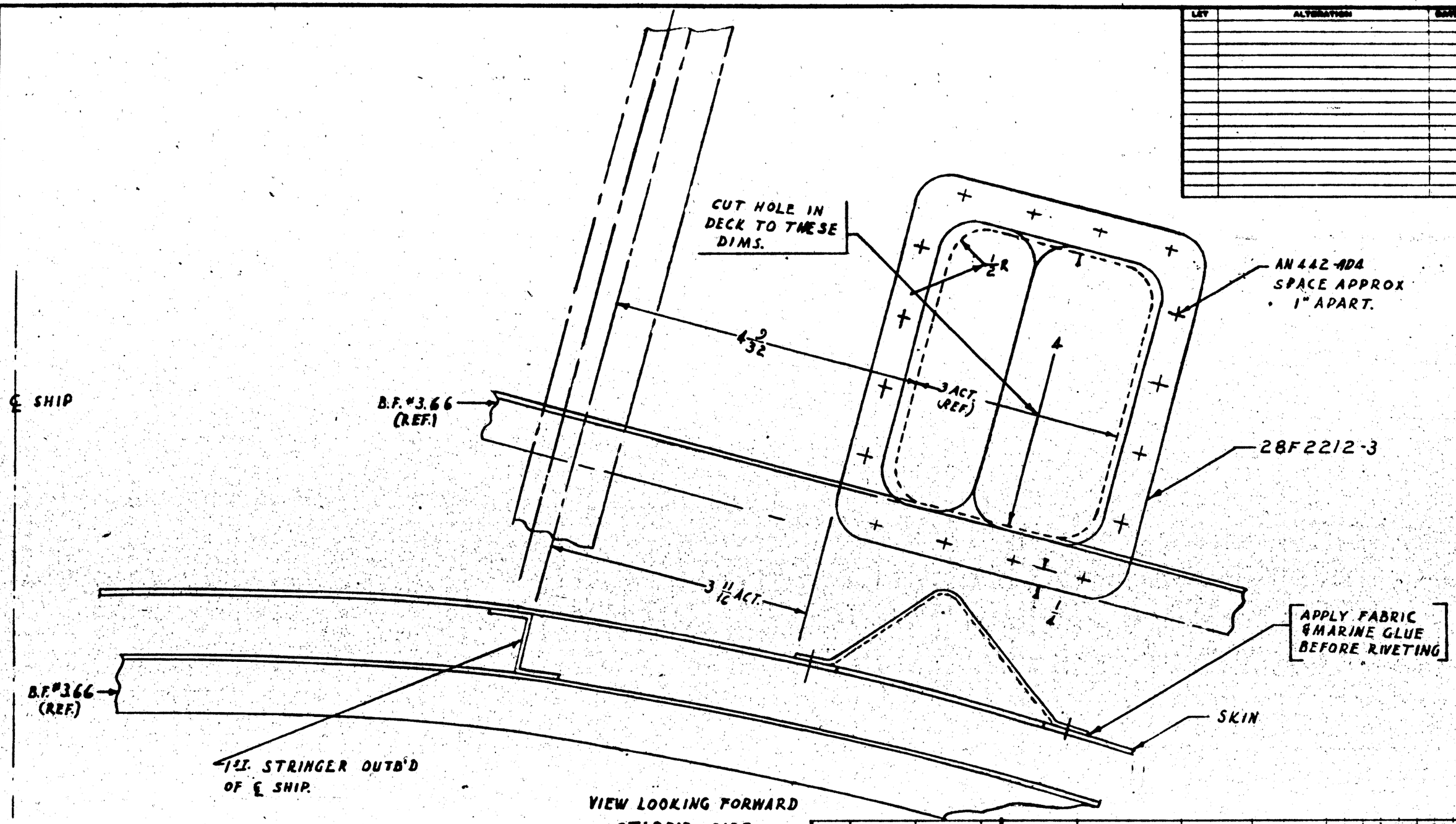

VIEW LOOKING FORWARD
STARB'D SIDE

ASSY. BASIC NO.	MODEL	NEXT ASSY.	REQ'D
	28-10	28B5508	1
	28-5AMC	C	1
	PBY-5A	B	1

REQUIREMENTS PER AIRPLANE

REPLACES — CHG. QTY. .10

REPLACED BY — ADV. QTY.

SCALE 12" = 1'0"

PART NO.	STOCK	MATERIAL	SPEC.	LH 2ND REQ.	LH 2ND REQ.	LH 2ND REQ.	LH 2ND REQ.	LH 2ND REQ.
PARTS LIST PER ASSY.				-0	-2	-3	-4	-5
ANA442AD4								
28FB212-3				1				
-5								

A.C.		1-2441 Grinding Burr	SIZE
NAVY —	—	Burrmaid	
HEAT TREAT	FINISH	DRAFT	CHECK STRUCT.	MAT	APPROV.	DWG.

NAME INSTALLATION-BRACKET FURN-VACUUM LINES BULKHEAD FITTING

CONSOLIDATED AIRCRAFT CORP. San Diego, Calif.

OPP. HAND

SIZE D

28B5623

PBY-5A, 28-5ANC AB 16766
OA-10

E.O. A14859
28-5ANC
PBY-5A
OA-10

LET	REVISION	DATE	BY
A.	ADDED NOTE "FOR SHOP USAGE" —	7-2-42	
	CORRECTED DIM HAND HOLDER.		
	REMOVED PORTION OF FLANGE		
	FROM -12		
B.	MADE FOR R.H. & LH CUT-OUT. ETC.		
	TRIMMED FLANGE OF -6 &		
	ADDED NOTE "-6 R.H. EXT. ETC."		
	REMOVED "A" CHG'S PER REMOVAL &		
	NOTE.	5-11-42	
C.	MADE FOR -7L & -7R REQUIRED "X" DIM.		
	G.R.A. EXT. MADE CONF. TO NOTE		
	"Y-2-A17RT X 5" ADDED REQ'TS		
	FOR 28-5ANC (SEE CHG NO. 1)	6-2-42	
D	DIM. FOR -7L & -7R REPLACED		
	"Y-2-A2TRT X 5" WITH "NOTED" &		
	ADDED NOTE "D" MATERIALS &		
	SPEC. ADDED MATERIAL NOTE		
	FOR -7 L/R. NO WT. CHG.	9-8-42	

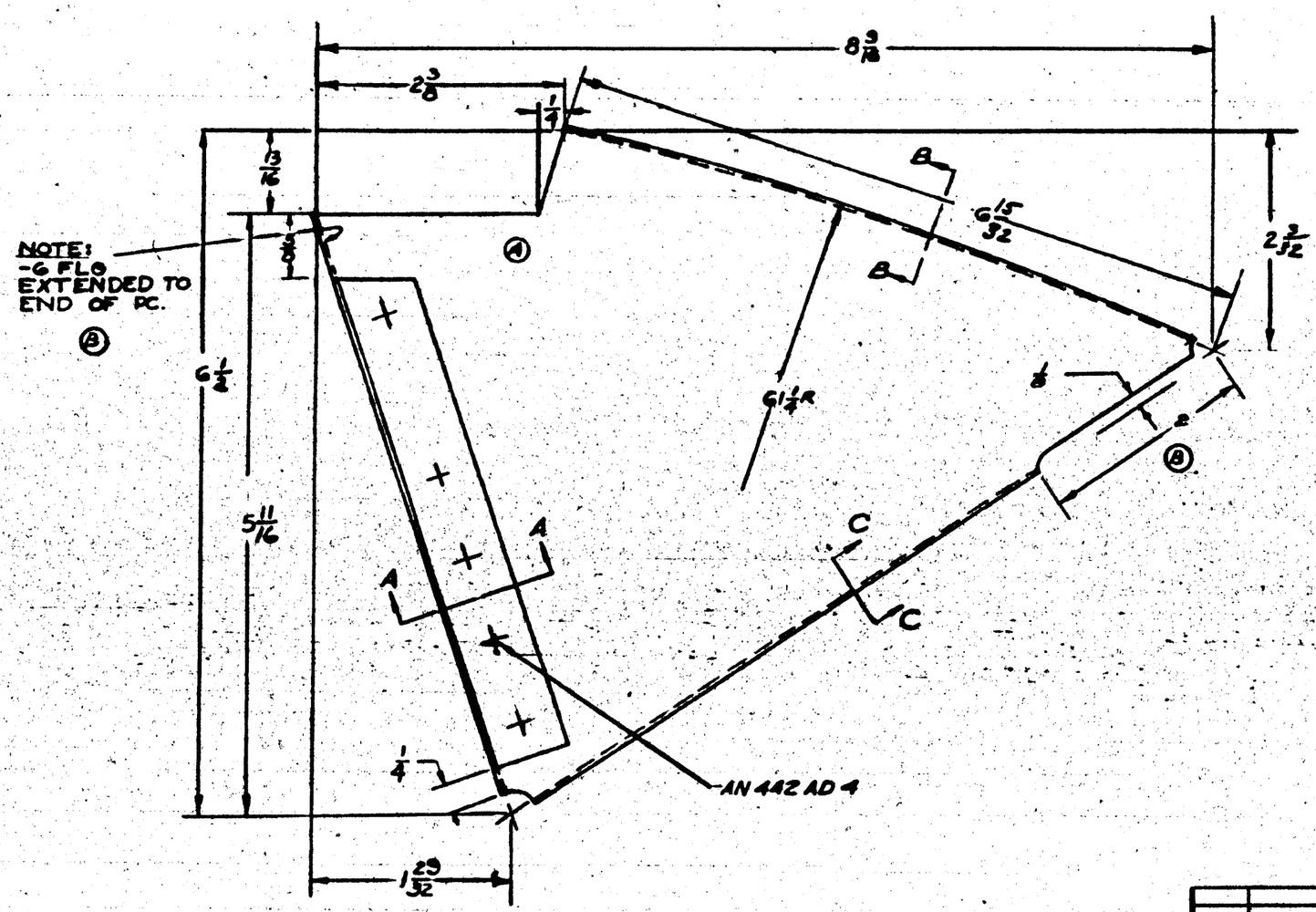

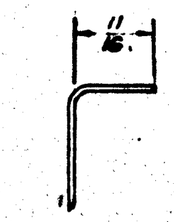

SECTION B-B

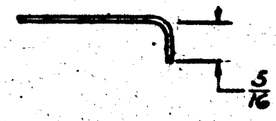

SECTION C-C

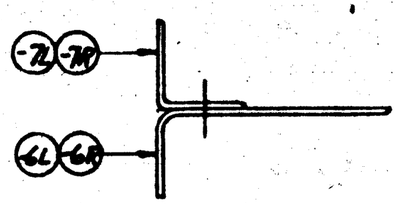

SECTION A-A

NOTE:-
(A) 1- R.H. PART SHOWN
L.H. PART OPPOSITE
(D) 2- MATERIAL FOR -7L & -7R MAY BE:
(A) Y-2-A2TRT X 5, OR
(D) K5401 X 5, AL. AL. EXTR, SPEC. QQ-A-354-T.

FINISH CODE	
Z	ANODIC TREATMENT
P	P-37 PRIMER
AP	ALUMINIZED PRIMER
C	CADMIUM PLATE

ALL BEND RADII 1/8
ALL RELIEF RADII 1/16

ASSY. DASH No.	MODEL	NAVY ASSY.	QTY.
-R	28-5ANC	28-5	1
-L	28-5ANC	28-5	1
-R	PBY-5A	PBY-5A	1
-L	PBY-5A	PBY-5A	1
-R	PBY-5A	PBY-5A	1
-L	PBY-5A	PBY-5A	1

AN 442 AD 4

REQUIREMENTS PER AIRPLANE

REPLACES — .23 GALC. WT.

REPLACED BY — ADV. WT.

SCALE 12" = 1'-0"

PART No.	STOCK	MATERIAL	SPEC.	PARTS LIST PER ASSY. -0	-2	-3	-4	-5
-7R	NOTED	NOTED	NOTED					
-7L	NOTED	NOTED	NOTED					
6R	.081 X 6 1/4 X 9 3/16	AL. ALC.						
6L	.081 X 6 1/4 X 9 3/16	AL. ALC.						

AC			
NAVY NONE	Z-P-2AP	9/16	
HEAT TREAT	FINISH	DRAFT	CHECK STRUCT MAT PROD ENGR

NAME REINF. GUSSET - NULL MECH SEAT SUPPORT STA 28 1/2

CONSOLIDATED AIRCRAFT CORP. San Diego, Calif.

OPP. HAND 28B5624-1

DWG. NO. D 28B5624

LTR	DESCRIPTION	ZONE	APP'D
A	[illegible]	[illegible]	[illegible]
B	CHG'D SIZE ARMS FROM [illegible]	[illegible]	[illegible]
C	ADDED CUTOUT (MFG'S REQ)	[illegible]	[illegible]

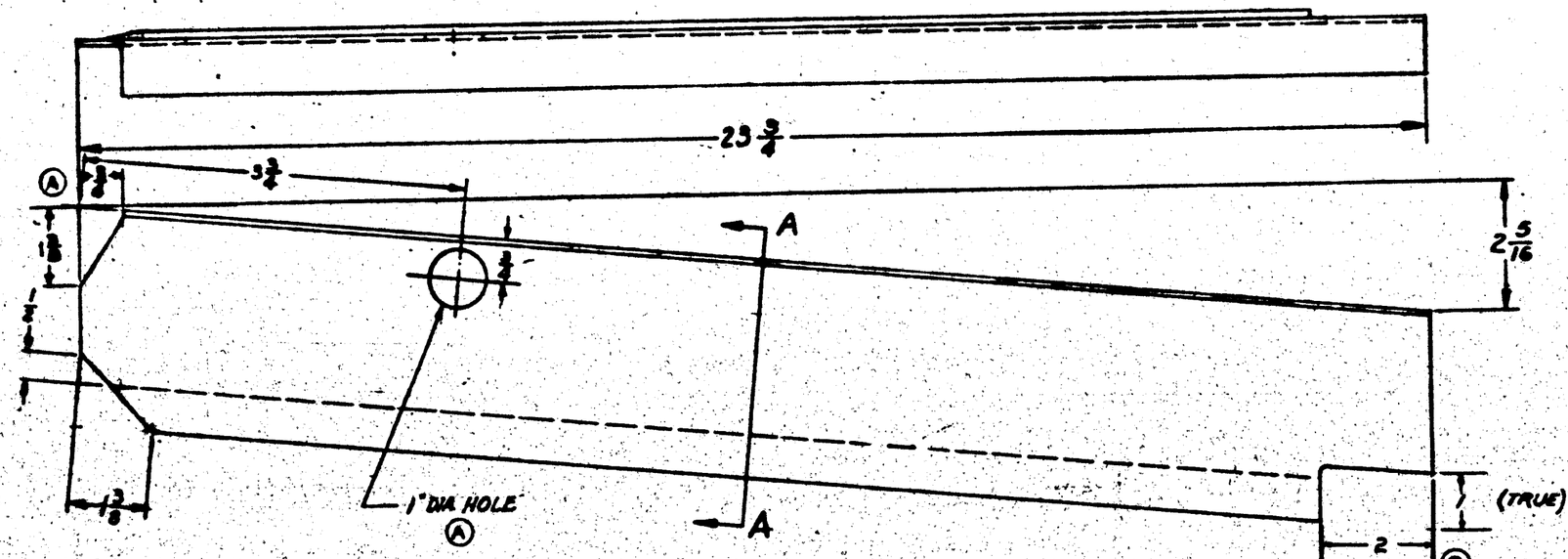

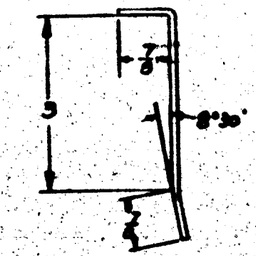

SECTION A-A

FINISH CODE	
Z	ANODIC TREATMENT
P	9-27 PRIMER
AP	ALUMINIZED PRIMER
C	CADMIUM PLATE

THIS DWG HAS BEEN RUSH RELEASED
9-17-41

ASSY. Group No.	MODEL	NEXT ASSY.	REQ.
	CO-SAMN	28B5520	1
	CO-SAMC	28B5520	1
	PBY-5A	28B5520	1

REQUIREMENTS PER AIRPLANE

REPLACES	.70 # Grass Wt.
REPLACED BY	Adv. Wt.
UNLESS OTHERWISE STATED: +1/32 ± 1/16°	SCALE 6"-1'0"

PART NO.	STOCK	MATERIAL	SPEC.	LH REQ.	RH REQ.	LH REQ.	RH REQ.	LH REQ.	RH REQ.	LH REQ.	RH REQ.	LH REQ.	RH REQ.
		.064 X 2.5 X 47/8	Al Cr [illegible]	47A8-T									
PARTS LIST PER ASSY.					-0	-2	-3	-4	-5				

AC			9-10-41			
NAVY NONE	ZP					
HEAT TREAT	FINISH	DRAFT	CHECK	STRUCT	MAT	APPROV.	ENG

NAME BEAM-HULL-NOSE WHEEL DOOR MECH. - END

OPP. HAND

CONSOLIDATED AIRCRAFT CORP. San Diego, Calif.

SIZE D. DWG. 28B5635

E ON 7934

LTR	REVISION	DATE	BY
A	[illegible]		
	[illegible]		
	2.92a. WEIGHT CHANGE [illegible]	1-15-42	[illegible]

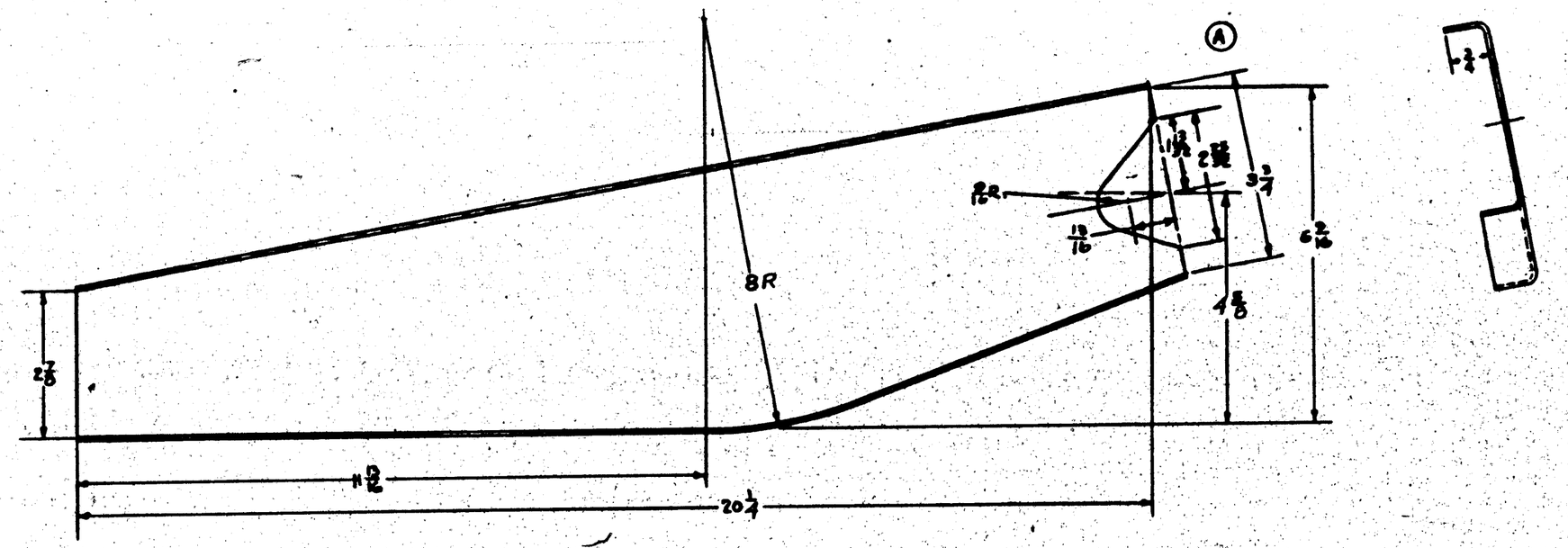

THIS DWG HAS BEEN RUSH RELEASED
9-17-41

FINISH CODE	
Z	[illegible]
P	[illegible]
AP	[illegible]
C	[illegible]

PART NO.	MODEL	Next Assy.	QTY.
	28-SAMN	28B5637	1
	28-SAMC	28B5637	1
	PBY-5A	28B5637	1

REQUIREMENTS PER AIRPLANE

REPLACES	.76 Next Assy.
REPLACED BY	Assy. Qty.
SCALE	6" = 1'-0"

PART No.	STOCK	MATERIAL	SPEC.	LH REQ.	RH REQ.	LH REQ.	RH REQ.	LH REQ.	RH REQ.	LH REQ.	RH REQ.	LH REQ.	RH REQ.
	.091 x 7 1/2 x 21	24ST	47AB-A	-1	-2	-3	-4	-5					

PARTS LIST PER ASSY.

AC		9-4-41						
NAVY SR 53	Z-P	PAIG				9-19-41		
HEAT TREAT	FINISH	DRAFT	CHECK	STRUCT	MAT	APPROV	ENG.	

NAME BEAM - HULL - NOSE WHEEL DOOR - TORQUE TUBE STIFFENER

OPP. HAND

CONSOLIDATED AIRCRAFT CORP. San Diego, Calif.

DWG. SIZE D

28B5638

R

E.O. AM880

[illegible]	[illegible]		
C	[illegible] ALLOY [illegible] ADDED [illegible] NOTES [illegible]		
D	[illegible] 6 5/16 was 6 3/8, 1 11/16 was 1 3/4, 1 3/8 was 1 7/16, [illegible]		
E	[illegible] R.H. HOLE [illegible] DIM. 1 7/8, RELOCATED [illegible] 2 HOLES & ADDED DIMS. 2 5/16 & 3 5/16, ADDED NOTE "2 HOLES .316 DIA." NOTE "7 HOLES .261 DIA." WAS "10 HOLES .261 DIA." MFG. WT. CHG.	10-13-[illegible]	[illegible]

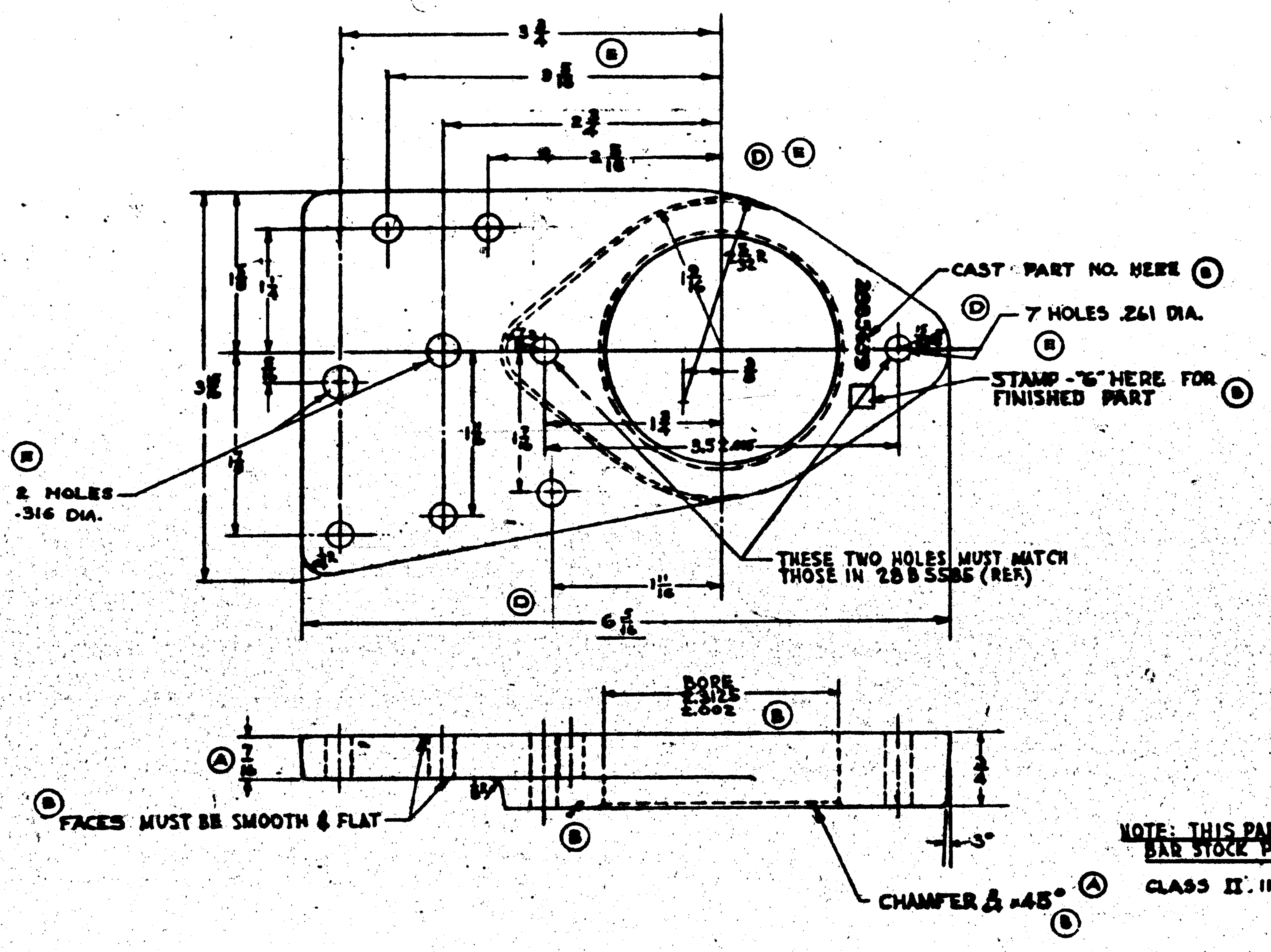

NOTES:

1- MATERIAL MAY BE:
- (A) AL. ALLOY 195T4, SPEC. AN-QQ-A390 CL I, T.S. 28,000 P.S.I., OR
- (B) AL. ALLOY S-195-T6, SPEC. AN-A5 CL II, T.S. 32,000 P.S.I.

NOTE: THIS PART MAY BE MACHINED FROM BAR STOCK PENDING RECEIPT OF CASTINGS.

CLASS II. INSPECTION

BREAK ALL SHARP EDGES
ALL UNSPECIFIED RADII 1/16

THIS DWG HAS BEEN RUSH RELEASED
9-17-41

FINISH CODE	
Z	[illegible]
P	P-27 PRIMER
AP	ALUMINIZED PRIMER
C	CADMIUM PLATE

-6	28-[illegible]	28B5[illegible]	1
-[illegible]	[illegible]	[illegible]	1
-[illegible]	[illegible]	[illegible]	1
[illegible]	MODEL	NEXT ASSY.	[illegible]

-6 MADE FROM CASTING

PART No.	STOCK	MATERIAL	SPEC.
	CASTING	NOTED	NOTED

PARTS LIST PER ASSY.

-0 -2 -4 -6 -8

AG 9-16-41
HEAT TREAT: NOTED
FINISH: Z-P-AP

NAME: HOUSING - BULL-NOSE WHEEL DOOR TORQUE TUBE STIFFENER BEARING

CONSOLIDATED AIRCRAFT CORP. San Diego, Calif.

D 28B5[illegible]

[illegible]

LET	ALTERATION	DATE	BY
A	REVISED PER ENGR. ORDER 523 [illegible]		
	[illegible]		

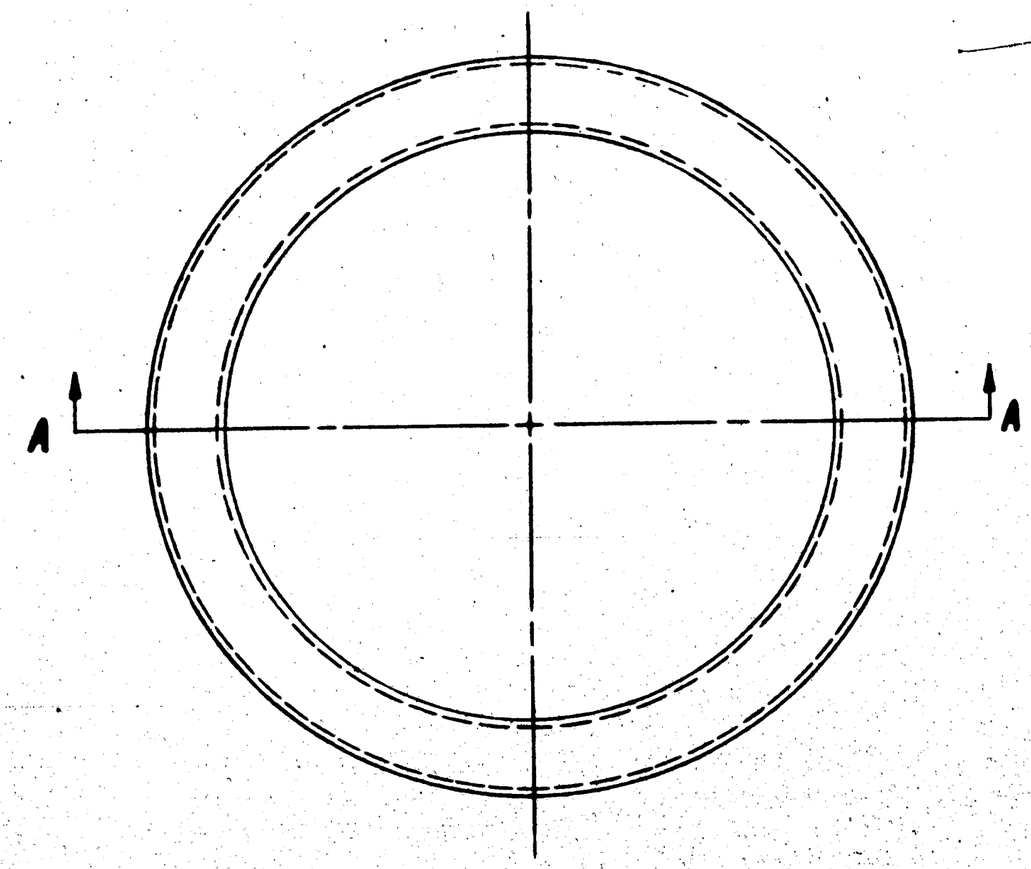

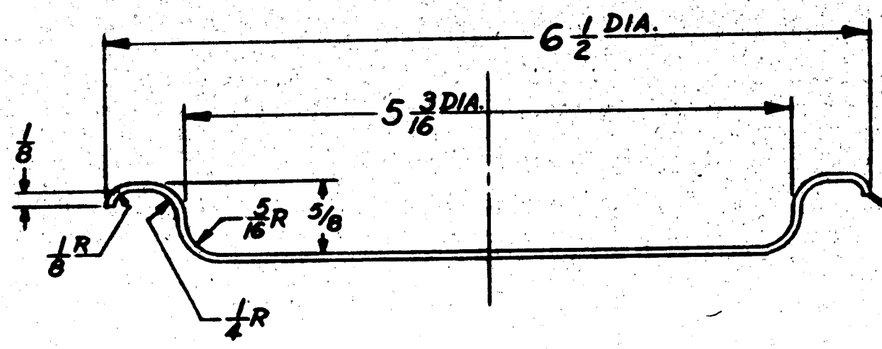

NOTE: THIS EDGE SHALL BE SMOOTH AND EVEN ALL AROUND

SECTION A-A

FINISH CODE	
Z	[illegible]
F	[illegible]
AP	[illegible] PRIMER
C	[illegible] PLATE

RUSH RELEASED 1-13-42

CONT. #77713 (#72716CM)
CONT. #88476

MODEL	MOD. ASSY.	SER.
PBY-5A	28B5033	

REQUIREMENTS PER AIRPLANE

REPLACED	.34# ONE WT.
REPLACED BY	ASY. WT.
SCALE 12"-1'0"	

PART No.	STOCK	MATERIAL	SPEC.
	.064 X 7 1/2 X 7 1/2	ALCLAD	24S-A

PARTS LIST FOR ASSY.

LH REQ.	RH REQ.	LH REQ.	RH REQ.	LH REQ.	RH REQ.	LH REQ.	RH REQ.	LH REQ.	RH REQ.
-0		-2		-3		-4		-5	

A.C.		ALTERNATE						
NAVY SR53	Z-F-AP	1-84	DRAFT	CHECK	STRUCT	WT.	APPROV.	ENG.
HEAT TREAT	FINISH							

NAME FRAME - HULL - BOMBER WINDOW - HAND HOLE COVER

OPP. HAND NONE

CONSOLIDATED AIRCRAFT CORP. San Diego, Calif.

DWG. D 28B5647

R

LET	ALTERATION	DATE	BY
A	REMOVED REQ. FOR PARTS LIST [illegible]		

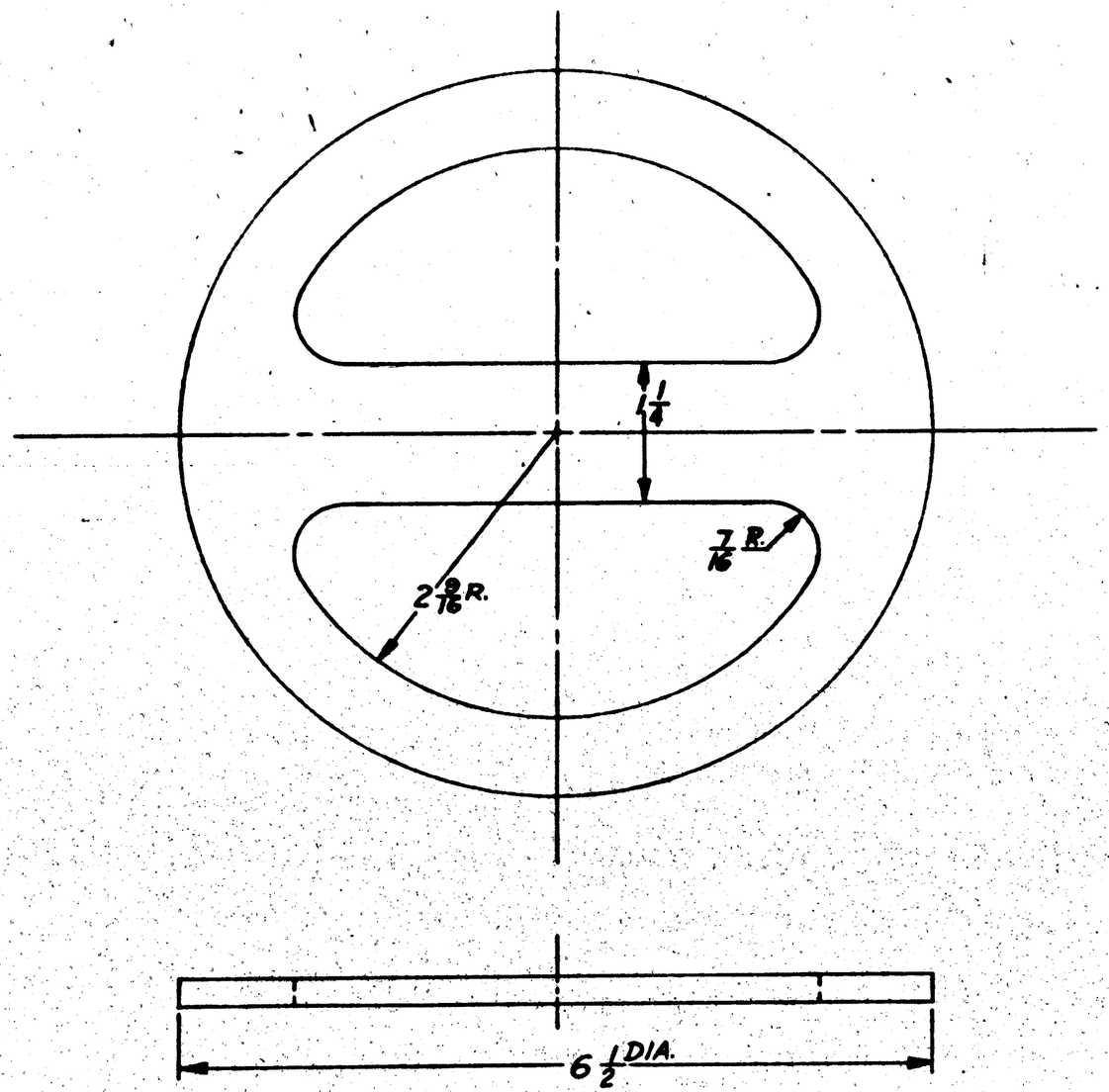

FINISH CODE	
Z	ANODIC TREATMENT
P	P-27 PRIMER
AP	ALUMINIZED PRIMER
C	CADMIUM PLATE

RUSH RELEASED 1-13-42

CONT. #77713 (#72714 ON)
CONT. #88476

ASSY. GRP. No.	MODEL	NEXT ASSY.	QTY.
	PBY-5A	28B5039	1

REQUIREMENTS PER AIRPLANE

REPLACES	1.04 Cu. Ft.
REPLACED BY	Assy. Wt.
SCALE	12"-1'0"
1/32	

STAMP PART NUMBER WHERE SHOWN

PART No.	STOCK	MATERIAL	SPEC.	LH REQ.	RH REQ.	LH REQ.	RH REQ.	LH REQ.	RH REQ.	LH REQ.	RH REQ.	LH REQ.	RH REQ.
	.250 X 6 3/4 X 6 3/4	ALCLAD	61ST-T										
PARTS LIST PER ASSY.				-0		-2		-3		-4		-5	

AC		LETTER	2-4				
NAVY NOTED	Z-P-AP	1-9-42	4		TEG	1-17-42	
HEAT TREAT	FINISH	DRAFT	CHECK	STRUCT		APPROV	ENGR.

NAME: HANDLE-HULL-HAND HOLE COVER
OPP. HAND: NONE

CONSOLIDATED AIRCRAFT CORP. SAN DIEGO, CALIF.

DWG. SIZE: D
28B5648

R

LET	ALTERATION	DATE	BY
A	REVISED PER ENGR. DEPT. ORDER		
	CHANGED TO MEET [illegible]		
B	ALUMINUM CASTING SPEC. 35S-T-6		
	ADDED 1/32 R & 1/4 RADIUS SHEET		
	97AR-T. ADDED STAMP MFG. INSP. MK. 1-17-42		

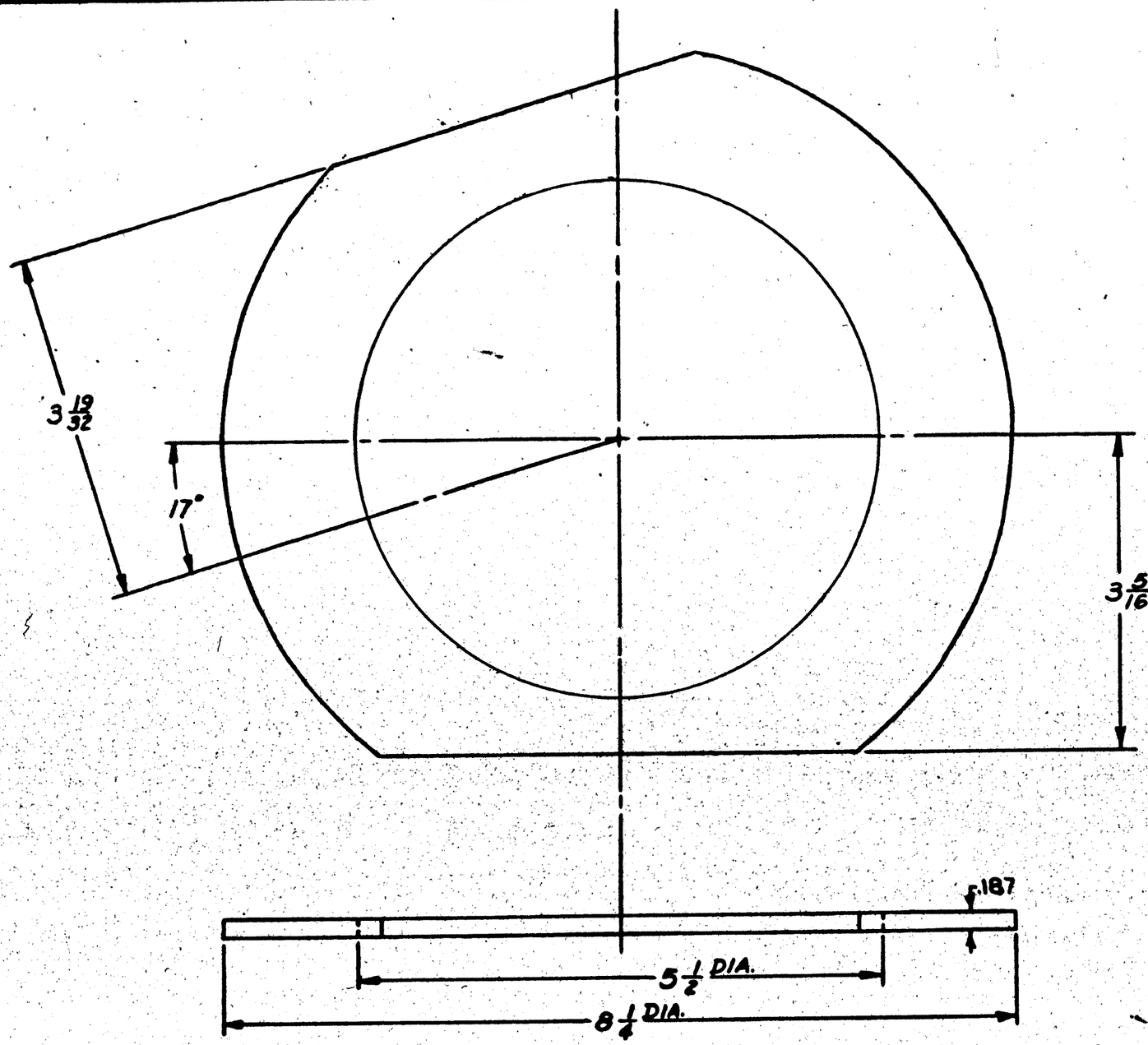

FINISH CODE	
Z	ANODIC TREATMENT
P	A-17 PRIMER
AP	ALUMINIZED PRIMER
C	CADMIUM PLATE

4P-GREEN PRIME

RUSH RELEASED 1-13-42

CONT. #77713 (#7271 Assy.) c-3187c
CONT. #88416

REV. Ltr.	MODEL	NEXT ASSY.	QTY.
	28-5AHN	28B5013	1
	PBY-5	28B5031	1
	PBY-5A	28B5033	1

REQUIREMENTS PER AIRPLANE

REPLACES	.72 Quan. Req.
REPLACED BY	Asy. Qty.
SCALE 1/32	SCALE 12"=1'0"

PART No.	STOCK	MATERIAL	SPEC.	LH RH REQ. -0	LH RH REQ. -2	LH RH REQ. -3	LH RH REQ. -4	LH RH REQ. -5
		ALUM. ALLOY CASTING	35S-T-6					

PARTS LIST PER ASSY.

NOTE: DIMENSIONS WITH ASTERISK (*) DO NOT NEED MACHINING IF CASTING IS PERMANENT MOLD, ANTIOCH OR OSBORN PROCESS CASTING.

AC		LETTER						
NAVY	Z-P-ZAP	1-13-42						
HEAT TREAT	FINISH	DRAFT	CHECK	STRESS		APPROV.	ENGR.	

NAME: OUTER FRAME-HUL-HAND HOLE COVER

OPP. HAND NONE

CONSOLIDATED AIRCRAFT CORP. San Diego, Calif.

SIZE D

28B5651

R

LET	ALTERATION	DATE	BY

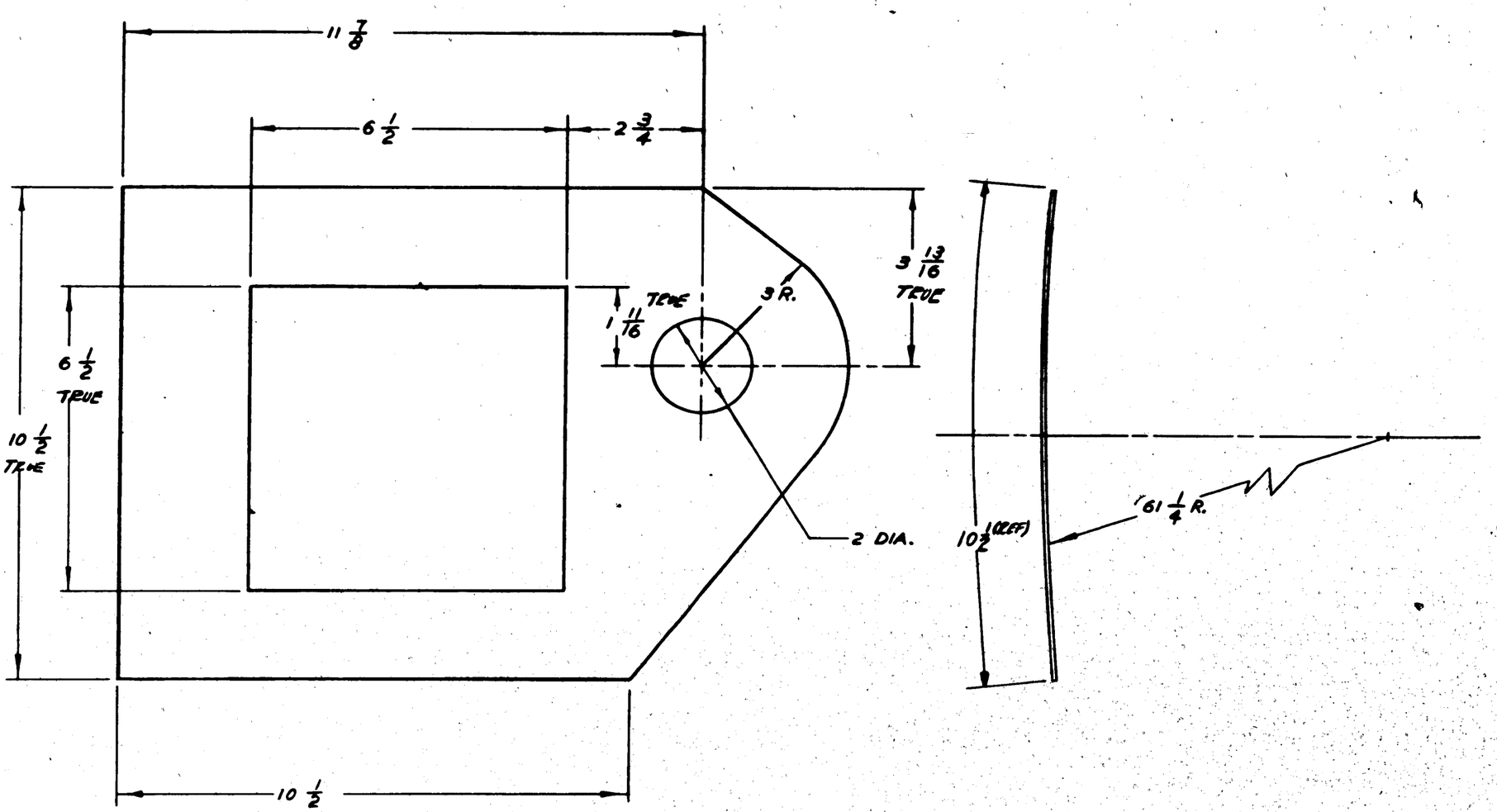

MCR 2218-2-2

APPROVED FOR TOOLING BY
J. Howard
6/17/43

ASSY. DASH NO.	MODEL	NEXT ASSY.	QUAN.
	PBY-5A	28B5681	1

REQUIREMENTS PER AIRPLANE

REPLACES	.70 CALC. WT.
REPLACED BY	ACT. WT.
UNLESS OTHERWISE SPECIFIED ± 1/32	SCALE 6" = 1'0"

STAMP PART NUMBER WHERE SHOWN

PART NO.	STOCK	MATERIAL	SPEC.	LH REQ. -0	RH REQ. -0	LH REQ. -2	RH REQ. -2	LH REQ. -3	RH REQ. -3	LH REQ. -4	RH REQ. -4	LH REQ. -5	RH REQ. -5
	.064 X 15 1/2 X 10 1/2	ALCLAD 24ST	QQA362-T										

PARTS LIST PER ASSY.

AC									
NAVY NONE	Z-P-GP	7-29-43	5-14-43						
HEAT TREAT	FINISH	DRAFT	CHECK	STRUCT	MAT'L	APPROV	ENG.		

NAME PLATE-CENTRAL HEATING SYSTEM REINFORCING

OPP. HAND NONE

CONSOLIDATED VULTEE AIRCRAFT CORP. SAN DIEGO DIVISION . . SAN DIEGO, CALIF.

SHEET D

28B5688

R 28B5688

LET	ALTERATIONS	CHKD	BY
A	ADDED [illegible]		

HOLE TO BE LOCATED IN ASS'Y.

GUIDE PIN HOLES

ALL RADII TO BE 1/8 UNLESS OTHERWISE SPECIFIED

SECTION A-A

SECTION B-B
C-C

NOTE! THIS CURVE TO MATCH CUT-OUT IN 28B5557

GUIDE PIN HOLE

Q4905-ADS

GUIDE PIN HOLE

7 L&R TO BE PERPENDICULAR TO REFERENCE LINE

1/2 SPHERICAL RADIUS AT CORNERS TO BLEND TO 1/8 RADIUS AT THIS POINT

STA. *8.

REF. LINE

CHINE REF.

3/8 FLANGE EXTEND FOR THIS DISTANCE

VIEW IN DIRECTION ARROW ~ D

NOTE! 1/2 SPHERICAL RADII AT CORNERS OF DOOR

FINISH CODE	
Z	ANODIC TREATMENT
P	ZnCr PRIMER
AP	ALUMINIZED PRIMER
C	CADMIUM PLATE

ASSY. GROUP No.	MODEL	NEXT ASSY.	QTY.
[illegible]	[illegible]	[illegible]	[illegible]

REQUIREMENTS PER AIRPLANE

REPLACES ____ .32# CALC. WT.

REPLACED BY ____ ADV. WT.

SCALE 6" = 1'

1/32 SCALE 12" = 1'

STAMP PART NUMBER WHERE SHOWN

PART No.	STOCK	MATERIAL	SPEC.	LH REQ.	RH REQ.	LH REQ.	RH REQ.	LH REQ.	RH REQ.	LH REQ.	RH REQ.	LH REQ.	RH REQ.
	PARTS LIST PER ASSY.			-0	-2	-3	-4	-5					
-74	.064 x 11 3/8 = 6 3/8	ALCLAD	47AB-(T)	1	1								
-74	.064 x 11 3/8 = 6 3/8	ALCLAD	47AB-(T)	1	1								
-44	.064 x 15 = 15	ALCLAD	47AB-(A)		1								
-44	.064 x 15 = 15	ALCLAD	47AB-(A)	1									

A C		UNLESS OTHERWISE SPECIFIED						
NAVY 3R53-T	Z-P-AP	12/19/42	1-6-43		2-6			
HEAT TREAT	FINISH	DRAFT	DESIGN	STRUCT.	MAT.	APPROV.	ENG.	

NAME DOOR - HULL - MAIN WHEEL WELL

CONSOLIDATED AIRCRAFT CORP. San Diego, Calif.

OPP. HAND 28B5692R

SIZE D

28B5691

R

LET	ALTERATION	DATE	BY
A	[illegible]		
	[illegible]		
	[illegible]		
	[illegible]	9-15-41	[illegible]

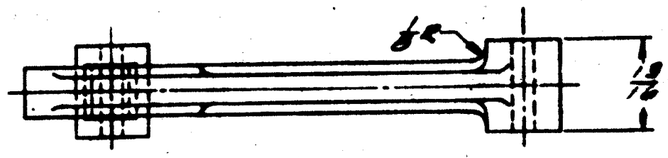

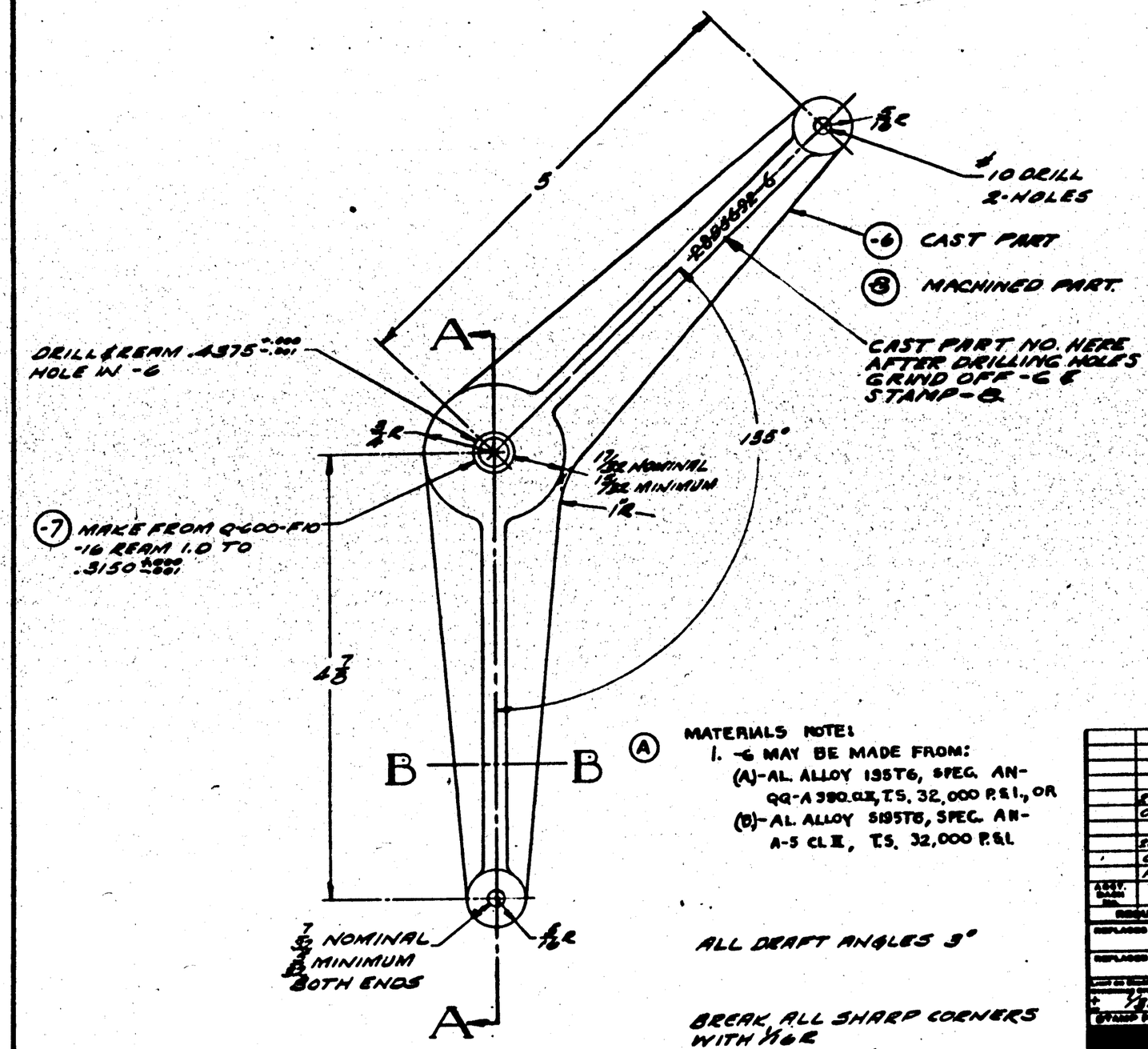

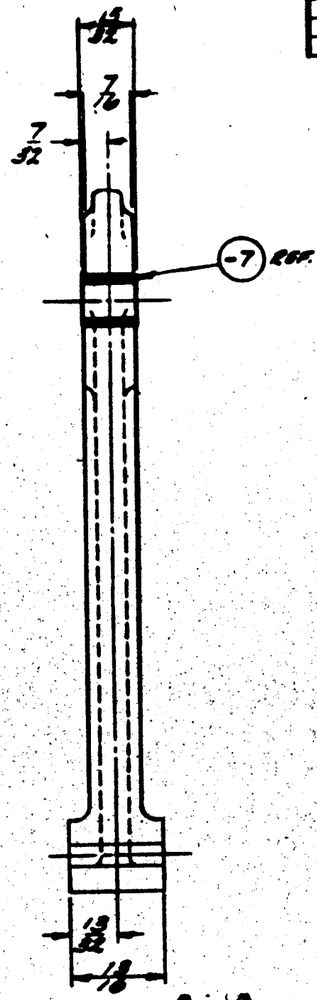

SECTION A-A

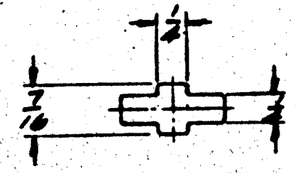

SECTION BB

NOTE! 1/8 RADII ON FILLETS UNLESS OTHERWISE SPECIFIED

FINISH CODE	
Z	ANODIC [illegible]
P	P-27 PRIMER
AP	ALUMINIZED PRIMER
C	CADMIUM PLATE

(A) MATERIALS NOTE:
1. -6 MAY BE MADE FROM:
(A)-AL. ALLOY 195T6, SPEC. AN-QQ-A 350 CL II, T.S. 32,000 P.S.I., OR
(B)-AL. ALLOY 195T6, SPEC. AN-A-5 CL II, T.S. 32,000 P.S.I.

ALL DRAFT ANGLES 9°

BREAK ALL SHARP CORNERS WITH 1/16 R

ASSY. DASH NO.	MODEL	NEXT ASSY.	REQ.
	28-SAMC	2885600	1
	OA-10	2885600	1
	28-SAMC	2885600	1
	OA-10	2885600	1
	PBY-5A	2885600	2

REQUIREMENTS PER AIRPLANE

REPLACES [illegible] Quan. Per.

REPLACED BY [illegible] Asy. Per.

SCALE 12"=1'0"

PART No.	STOCK	MATERIAL	SPEC.	LH REQ.	RH REQ.	LH REQ.	RH REQ.	LH REQ.	RH REQ.
								1/2	
-8	MAKE FROM -6							1/2	
-7									
-6	CORR. CASTING	NOTED	NOTED						

PARTS LIST PER ASSY. -0 -2 -3 -4 -5

AC		AWKE	HW	J.F.S.		
NAVY NOTED	2-P-AP	9/6/41	LOC			
HEAT TREAT	FINISH	DRAFT	CHECK	STRUCT.	MAT	APPROV. ENG.

NAME BELLCRANK-HULL-MAIN WHEEL WELL DOOR CONTROL

OPP. HAND NONE

CONSOLIDATED AIRCRAFT CORP. San Diego, Calif.

DWG. SIZE D

2885692

2885692

PBY-5. 2B-5AMC EO 38991
PBY-5A. 2B-5AMC

LTR	DESCRIPTION	DATE	APPD
A	[illegible]		
B	[illegible]		
	[illegible]		
C	[illegible]		
	[illegible]		
D	[illegible]		

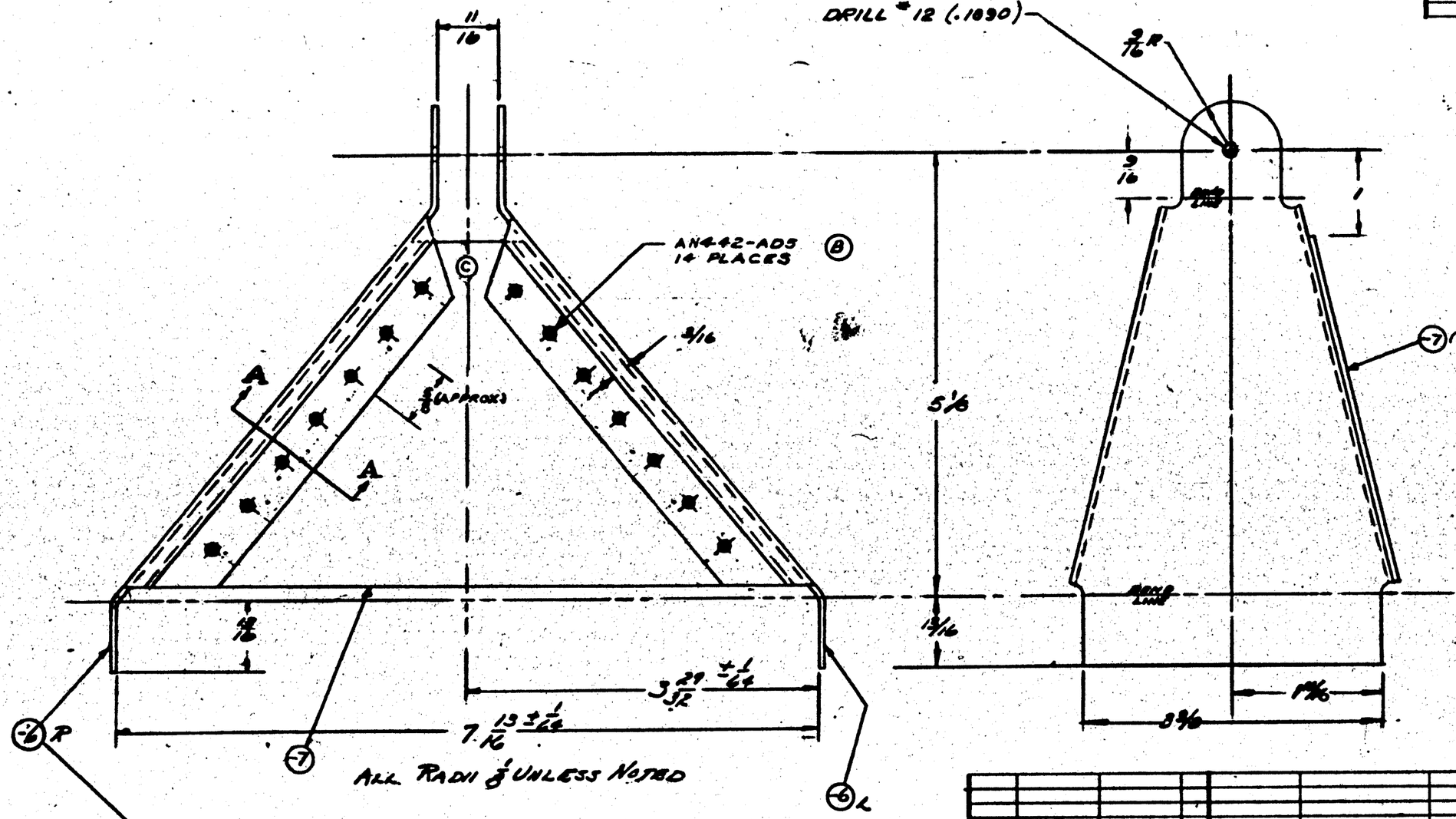

FINISH CODE

Z	ANODIC TREATMENT
P	P-17 PRIMER
AP	ALUMINIZED PRIMER
C	CADMIUM PLATE

ASSY. CLASS NO.	MODEL	NEXT ASSY.	QTY.
	[illegible]		
	[illegible]		
	A07-5A	[illegible]	1

REQUIREMENTS PER AIRPLANE

REPLACES	QTY.
REPLACED BY	ASS. QTY.
LAST AC SERIAL NO. USED	GRIP 12"-10"
STAMP ASSY. NO.	[illegible]

PART NO.	STOCK	MATERIAL	SPEC.	-0	-2	-3	-4	-5
B	AN442-AD5							
-7	[illegible]	ALCLAD	[illegible]	1				
-6	[illegible]	ALCLAD	[illegible]	1				
-11	[illegible]	ALCLAD	[illegible]	1				

PARTS LIST PER ASSY.

AC						
NAVY 3R-52 T	Z-P-AP					
HEAT TREAT	FINISH	DRAFT	CHECK	STRESS	DAT	APPROV

NAME SUPPORT-NULL-MAIN WHEEL WELL BELL CRANK

CONSOLIDATED AIRCRAFT CORP. San Diego, Calif.

DWG. NO. D 28B5623

LET	ALTERATION	DATE	BY

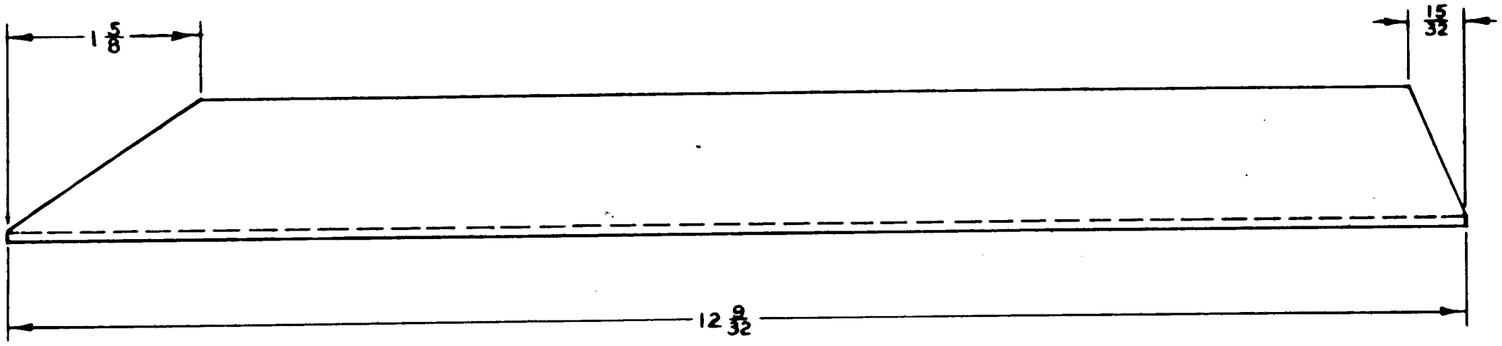

M.C.R# 299

ASSY. DASH No.	MODEL	NEXT ASSY.	QUAN.
-R	PBY-5A	28B5708	
-L	PBY-5A	28B5708	

REQUIREMENTS PER AIRPLANE

REPLACES

REPLACED BY

.30 Calc. Wt.

Act. Wt.

UNLESS OTHERWISE SPECIFIED ON ENGINEERING DRAWINGS ± 1/32

SCALE 12" = 1' 0"

STAMP PART NUMBER WHERE SHOWN

PART No.	STOCK	MATERIAL	SPEC.	LH REQ. -0	RH REQ. -0	LH REQ. -2	RH REQ. -2	LH REQ. -3	RH REQ. -3	LH REQ. -4	RH REQ. -4	LH REQ. -5	RH REQ. -5
	K78Y X 12 7/16	AL AL EXT.	4SA-O COND'T										

PARTS LIST PER ASSY.

AC		LEADS					
NAVY NONE	Z-P-GP	7-21-43			9-1-43		
HEAT TREAT	FINISH	DRAFT	CHECK	STRUCT.	MAT	APPROV	ENG.

NAME REINFORCEMENT HULL BULK-HEAD STA. 50 LOWER FWD. ANGLE

OPP. HAND 28B5712R

CONSOLIDATED VULTEE AIRCRAFT CORP. SAN DIEGO DIVISION . . SAN DIEGO, CALIF.

DWG. SIZE D

28B5712

APPROVED FOR TOOLING BY Gene 9/5-43

R 28B5712

LET	ALTERATION	DATE	BY

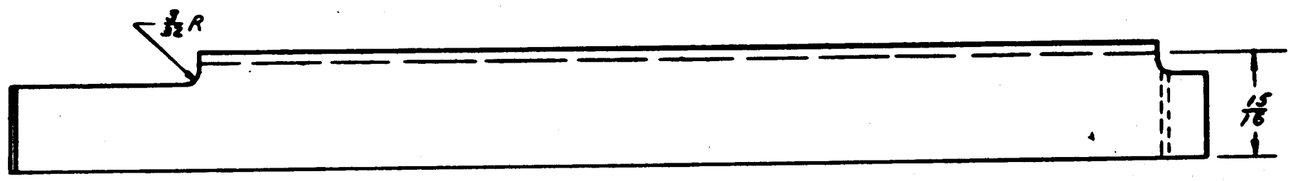

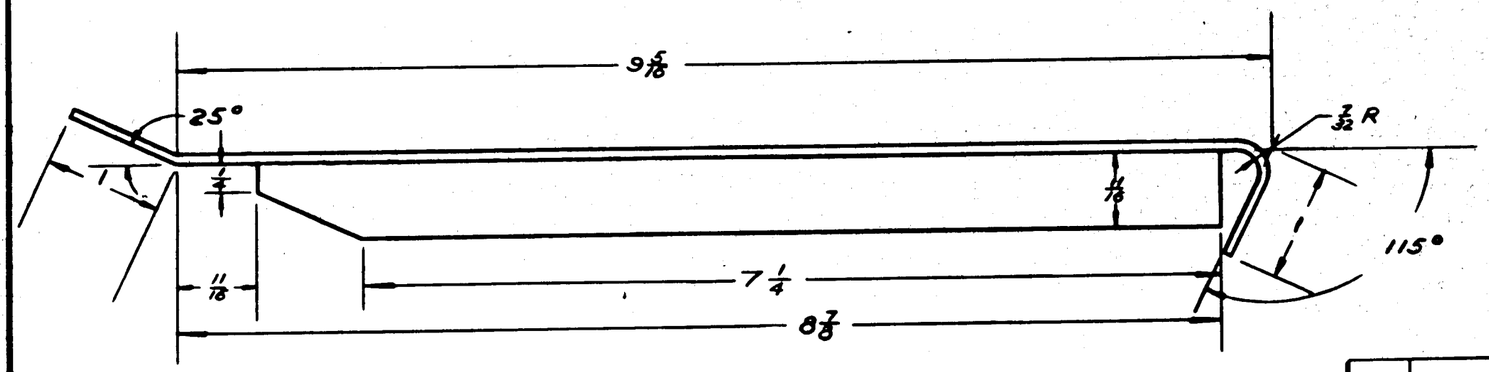

MOR 2218-4 & ON

3/32 BEND RADIUS.

APPROVED FOR TOOLING BY
C.S. Wills 9-23-43

ASSY. DASH NO.	MODEL	NEXT ASSY.	REQ.
	A8Y-5A	28B5866	1

REQUIREMENTS PER AIRPLANE

REPLACES	.14 CALC. WT.
REPLACED BY	ASY. WT.
UNLESS OTHERWISE SPECIFIED ± 1/32	SCALE 12" = 1'0"

STAMP PART NUMBER WHERE SHOWN

PART NO.	STOCK	MATERIAL	SPEC.	LH REQ.	RH REQ.	LH REQ.	RH REQ.	LH REQ.	RH REQ.	LH REQ.	RH REQ.	LH REQ.	RH REQ.
	.072 X 1 1/8 X 11 1/2	ALCLAD	QQA-362 T	-0		-2		-3		-4		-5	

PARTS LIST PER ASSY.

AC		8-18-43	Arnold Franz				
NAVY NONE	ZP-GP	SCHLICHTER	8-20-43	O.K.			
HEAT TREAT	FINISH	DRAFT	CHECK	STRUCT	MAT	APPROV	ENG.

NAME BRACE - BELTFRAME STATION 366

OPP. HAND NONE

CONSOLIDATED VULTEE AIRCRAFT CORP. SAN DIEGO DIVISION . . SAN DIEGO, CALIF.

DWG. D SIZE 28B5716

R 91582

LET	ALTERATION	DATE	BY

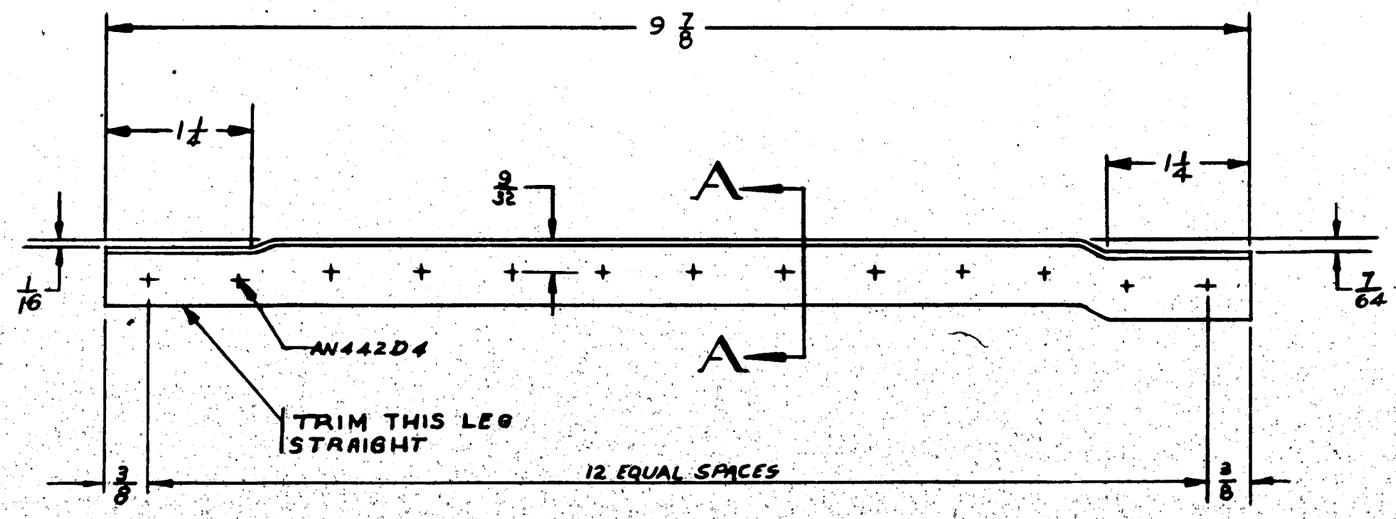

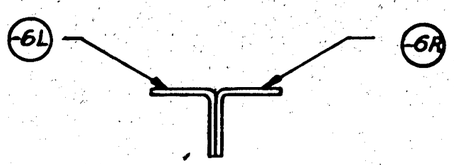

SECTION A-A

MCR # 272A-1

NOTE:
USE OF "AD" TYPE
RIVETS IS OPTIONAL.

APPROVED FOR
TOOLING BY
F. HOWARSH 9-10-43

ASSY. DASH No.	MODEL	NEXT ASSY.	REV.
	PBY-5A	28B3920	1

REQUIREMENTS PER AIRPLANE

REPLACES .09 CALC. WT.

REPLACED BY AGY. WT.

LIMIT OR TOLERANCE UNLESS OTHERWISE SPECIFIED: ± 7/32 SCALE 12" = 1'0"

STAMP PART NUMBER WHERE SHOWN

AN442D4

PART No.	STOCK	MATERIAL	SPEC.	LH REQ.	RH REQ.	LH REQ.	RH REQ.	LH REQ.	RH REQ.	LH REQ.	RH REQ.	LH REQ.	RH REQ.
PARTS LIST PER ASSY.				-0		-2		-3		-4		-5	
-6R	Y2A11T X 10 1/4			1									
-6L	Y2A11T X 10 1/4				1								

A C
NAVY NONE
HEAT TREAT

Z - P-2GP
FINISH

DRAFT	CHECK	STRUCT	MAT	APPROV	ENG.
9-2-43					

NAME LONGERON ASSY: BOMBER'S WINDOW SHUTTER HOUSING CENTER

OPP. HAND NONE

CONSOLIDATED VULTEE AIRCRAFT CORP. SAN DIEGO DIVISION . . SAN DIEGO, CALIF.

DWG. SIZE D

28B5809

R 6005892

LET	ALTERATION	DATE	BY

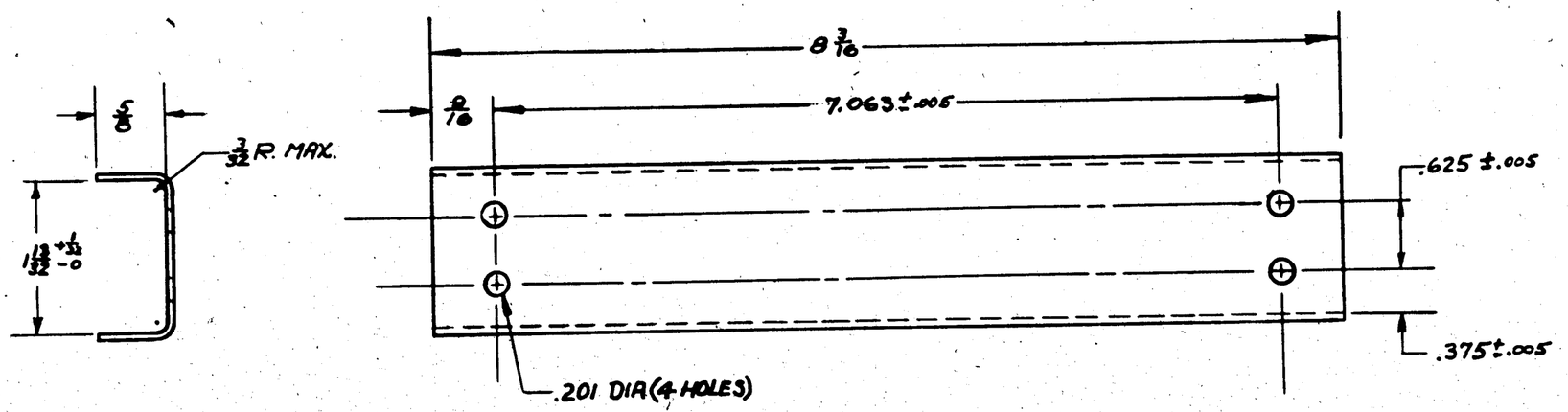

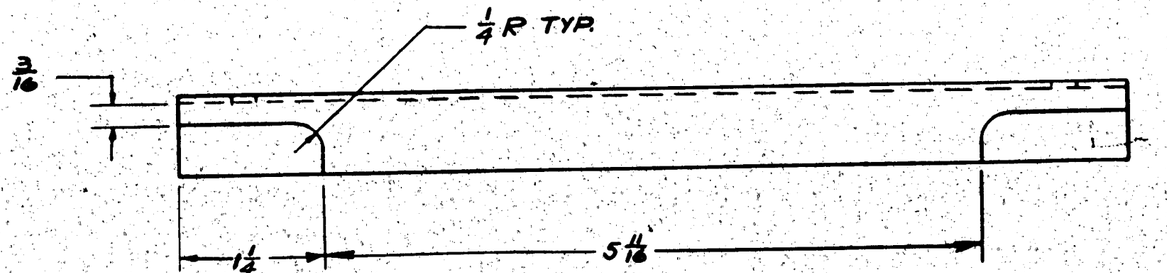

MCR 272A-1

APPROVED FOR TOOLING BY
J Howarth
9/10/43

MCR 272A

ASSY. DASH No.	PBY-5A	28B5811	1
	MODEL	NEXT ASSY.	REQ.

REQUIREMENTS PER AIRPLANE

REPLACES		.11 CALC WT.
REPLACED BY		ACT. WT.
± 1/32	SCALE 12" = 1'0	

STAMP PART NUMBER WHERE SHOWN

PART NO	STOCK	MATERIAL	SPEC	LH REQ. -0	RH REQ. -0	LH REQ. -2	RH REQ. -2	LH REQ. -3	RH REQ. -3	LH REQ. -4	RH REQ. -4	LH REQ. -5	RH REQ. -5
	.051 A 2 3/8 x 8 3/16	ALC. SHT.	QQ-A-362T										

PARTS LIST PER ASSY

AC				Burnett		Peverly
NAVY NONE	Z-P		DRAFT	CHECK	STRUCT	MAT	APPROV	ENG.
HEAT TREAT	FINISH			Howarth	Peverly			

NAME SUPPORT-BOMBERS WINDOW COVER UPPER LOCK'G. ROD LATCH BLK.

OPP HAND NONE

CONSOLIDATED VULTEE AIRCRAFT CORP. SAN DIEGO DIVISION . . SAN DIEGO, CALIF.

DWG SIZE D

28B5814

RD185982

LET	ALTERATION	DATE	BY

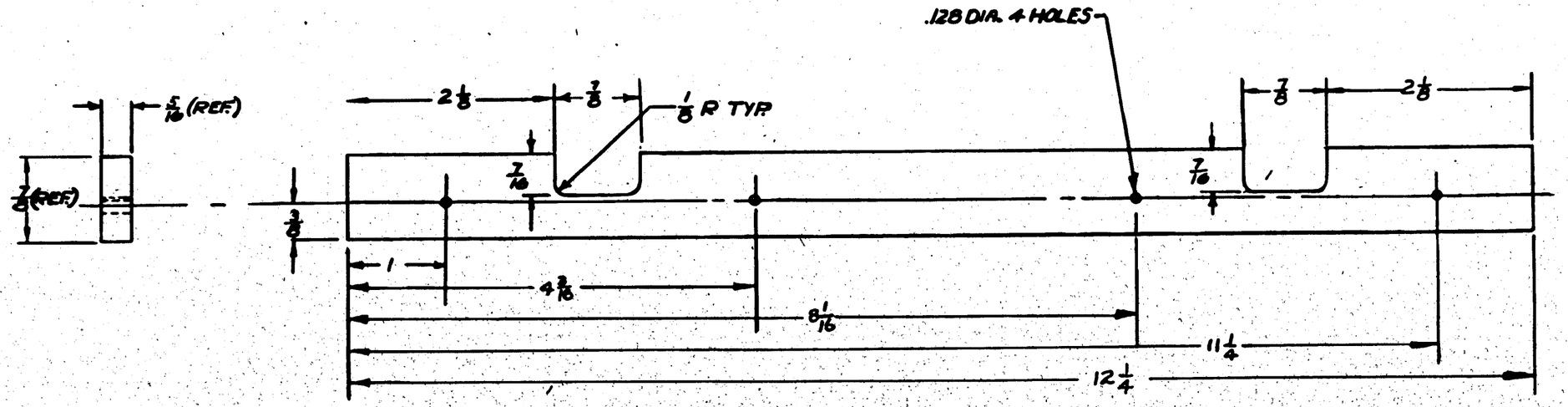

MCR #272A-1

APPROVED FOR TOOLING BY

F. HOWARTH
9-10-43

ASSY. BASIN No.	MODEL	NEXT ASSY.	REQ.
	PBY-5A	28B5903	1

REQUIREMENTS PER AIRPLANE

REPLACES	.315 CALC. WT.
REPLACED BY	ACT. WT.
SCALE 12" = 1'0"	

STAMP PART NUMBER WHERE SHOWN

PART No.	STOCK	MATERIAL	SPEC.	LH REQ.	RH REQ.	LH REQ.	RH REQ.	LH REQ.	RH REQ.	LH REQ.	RH REQ.	LH REQ.	RH REQ.
	5/16 x 3 7/8 x 12 1/2	AL. AL. BAR	QQ-A-354T										

PARTS LIST PER ASSY.

				-0	-2	-3	-4	-5			

AC		9-30-43							
NAVY NONE	Z-P-2GP								
HEAT TREAT	FINISH	DRAFT	CHECK	STRUCT	MAT	APPROV	ENG.		

NAME STRIP-BOMBERS WINDOW SHUTTER OPER. MECH. TAPPING

OPP. HAND NONE

CONSOLIDATED VULTEE AIRCRAFT CORP. SAN DIEGO DIVISION . . SAN DIEGO, CALIF.

SIZE D — 28B5815

R 4182181

LET	ALTERATION	DATE	BY

28B5816

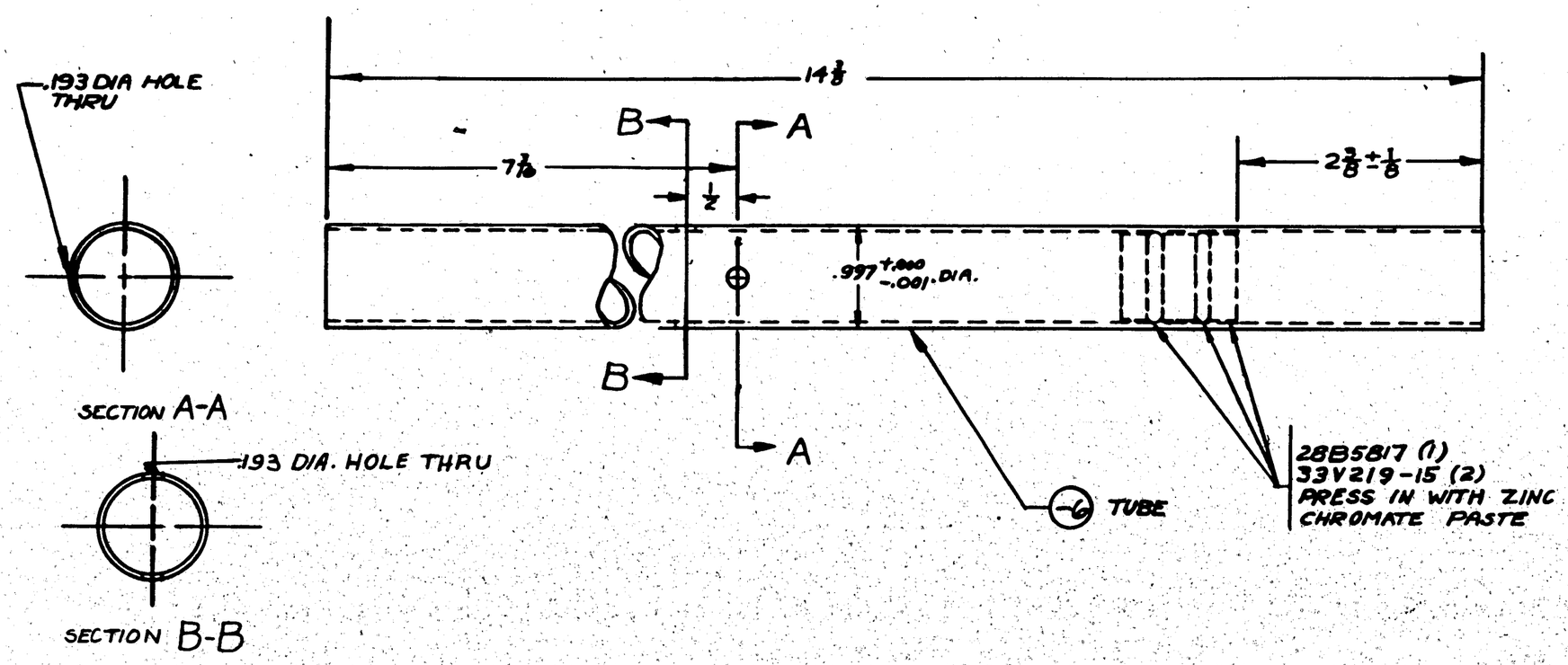

MCR# 272A-1

APPROVED FOR TOOLING BY
F. HOWARTH
9-10-43

-0 ASSY. DASH NO.	PBY-5A MODEL	28B5811 NEXT ASSY.	1 REQ.

REQUIREMENTS PER AIRPLANE

REPLACES 28B1805	.32 GALC. WT.
REPLACED BY	ADV. WT.
UNLESS OTHERWISE SPECIFIED ± 1/32	SCALE 12" = 1'0"

STAMP PART NUMBER WHERE SHOWN

PART No.	STOCK	MATERIAL	SPEC.		LH REQ.	RH REQ.	LH REQ.	RH REQ.	LH REQ.	RH REQ.	LH REQ.	RH REQ.	LH REQ.	RH REQ.
					-0		-2		-3		-4		-5	
33V219-15				2										
28B5817				1										
-3	10 D X .065 X 14 1/2 AL. AL. TUBE 24ST3 T			1										

PARTS LIST PER ASSY.

AC		3-31-43						
NAVY NONE	Z-P	BOWERS						
HEAT TREAT	FINISH	DRAFT	CHECK	STRUCT	MAT	APPROV	ENG.	

NAME SHAFT ASSY-BOMBERS WINDOW SHUTTER OPERATING MECHANISM

OPP. HAND NONE

CONSOLIDATED VULTEE AIRCRAFT CORP. SAN DIEGO DIVISION . . SAN DIEGO, CALIF.

SIZE D DWG. 28B5816

R

LET	ALTERATION	DATE	BY

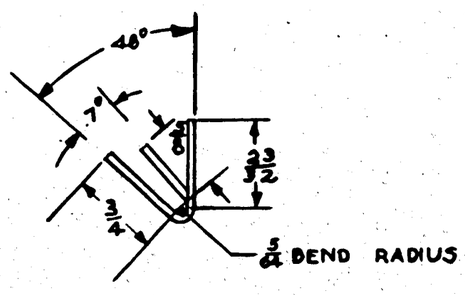

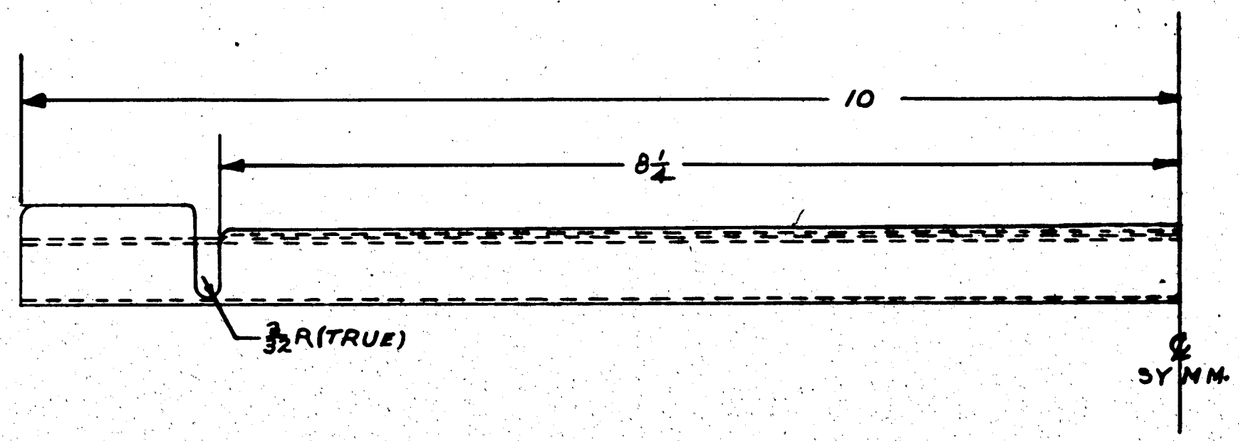

ALL CORNER RADII $\frac{1}{8}$

MCR #272A-1

APPROVED FOR TOOLING BY
F. Howard
9/10/43

ASSY. DASH NO.	MODEL	NEXT ASSY.	QTY.
	P8Y-3A	PBA5A0A	1

REQUIREMENTS PER AIRPLANE

REPLACES	.117 CALC. WT.
REPLACED BY	ACT. WT.

SCALE 12"=1'-0"

STAMP PART NUMBER WHERE SHOWN

PART No.	STOCK	MATERIAL	SPEC.	LH REQ.	RH REQ.	LH REQ.	RH REQ.	LH REQ.	RH REQ.	LH REQ.	RH REQ.	LH REQ.	RH REQ.
PARTS LIST PER ASSY.	040x1 7/8x20 1/2	ALCLAD	QQ-A362-T	-0		-2		-3		-4		-5	

AC									
NAVY NONE	Z-P-2GP	9/9/43							
HEAT TREAT	FINISH	DRAFT	CHECK	STRUCT	MAT	APPROV	ENG.		

NAME EDGING-NOSE BUMPER

OPP. HAND NONE

CONSOLIDATED VULTEE AIRCRAFT CORP. SAN DIEGO DIVISION . . . SAN DIEGO, CALIF.

DEPT. D DWG. 28B5823

R

E205882

LET	ALTERATION	DATE	BY

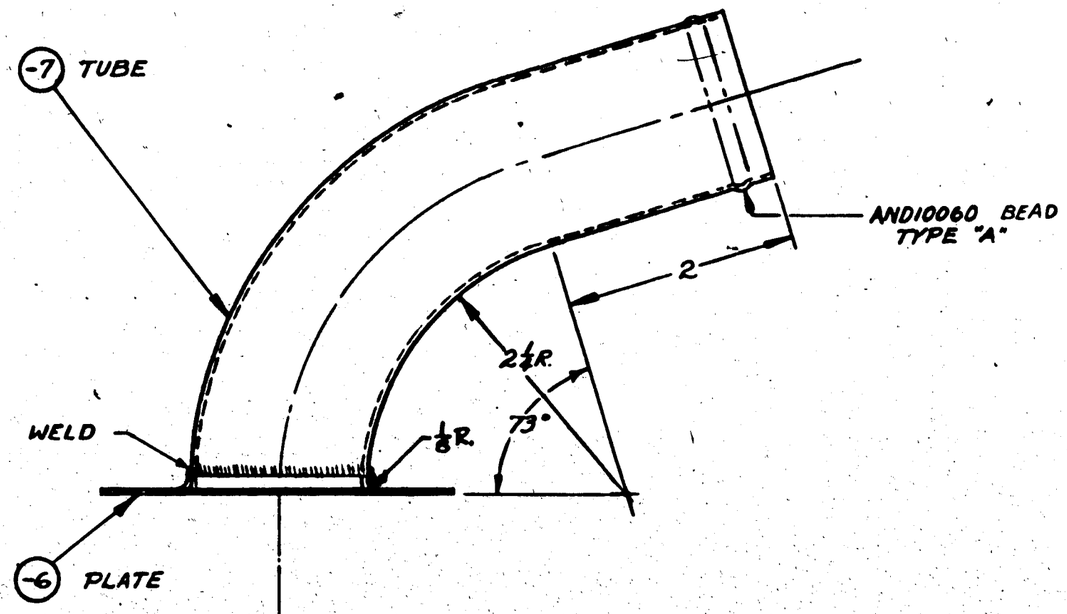

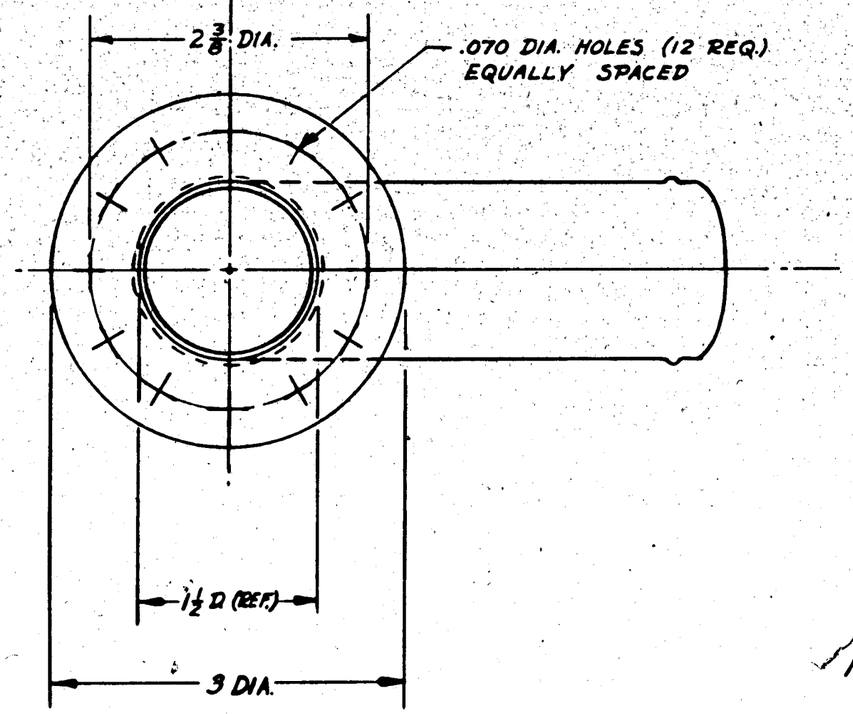

N.C.R.# 272A-1

APPROVED FOR TOOLING BY
June 9/11 - 43

ASSY. DASH NO.	MODEL	NEXT ASSY.	QTY.
	P-61-A	28B5820	1

REQUIREMENTS PER AIRPLANE

REPLACES	.17# CALC. WT.
REPLACED BY	ASY. WT.
PART OR ENGINEERING UNLESS OTHERWISE SPECIFIED	SCALE 12" = 1'-0"

STAMP PART NUMBER WHERE SHOWN

PART No.	STOCK	MATERIAL	SPEC.	LH REQ.	RH REQ.	LH REQ.	RH REQ.	LH REQ.	RH REQ.	LH REQ.	RH REQ.	LH REQ.	RH REQ.
-7	.049 x 4.00 x R	ALAL TUBE	WW-T-787										
-6	.051 x 3⅛ x 3⅛	ALAL SHEET	47A11-A										
PARTS LIST PER ASSY.				-0		-2		-3		-4		-5	

AC		MATERIAL	
NAVY NONE	E-P-2GP	03-40	
HEAT TREAT	FINISH	DRAFT	CHECK / STRUCT / WT. / APPROV. / ENG.

NAME OUTLET - BOMBER'S WINDOW SHUTTER HOUSING DRAIN

OPP. HAND NONE

CONSOLIDATED VULTEE AIRCRAFT CORP. SAN DIEGO DIVISION . . SAN DIEGO, CALIF.

SIZE D — 28B5824

DRAWING APPLIES ON:				DETAIL PARTS PER ASSEMBLY:			
AIRPLANE MODEL	ASSEMBLY NUMBER	SPARE PER A/P	NO. PER AIRPLANE	STANDARD PARTS	NO. REQ'D	PART NUMBER	NO. REQ'D
PBY-5A	28C004		2				
PBY-5	28C004		2				
28-5MA			2				
28-5MC			2				
28-5MB			2				
28-5AMV			2				
28-5AMG			2				
28-5AMW	28C004		2				

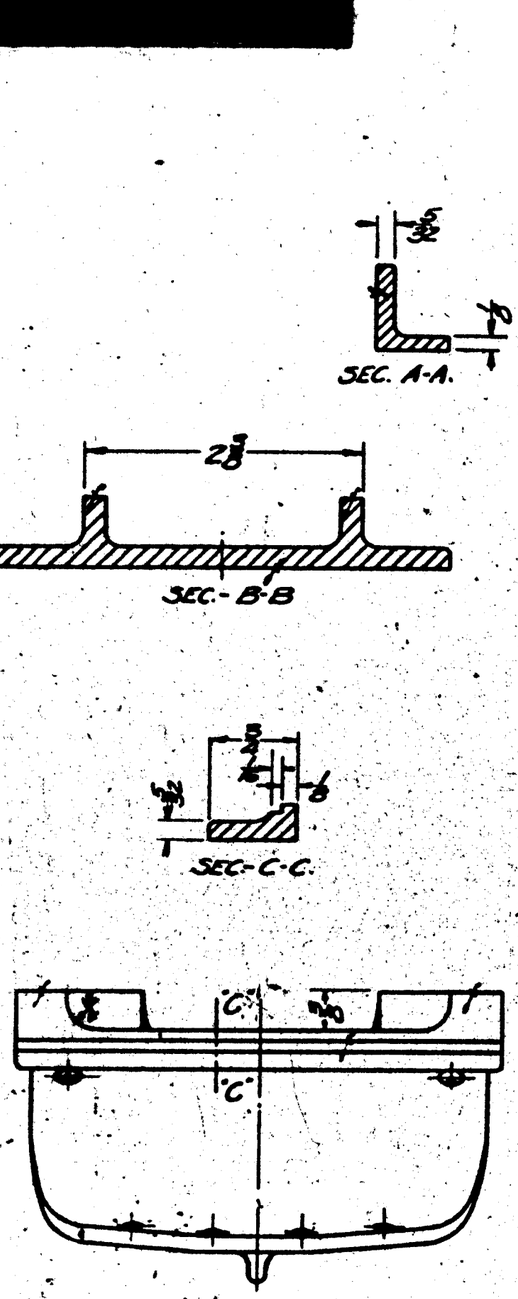

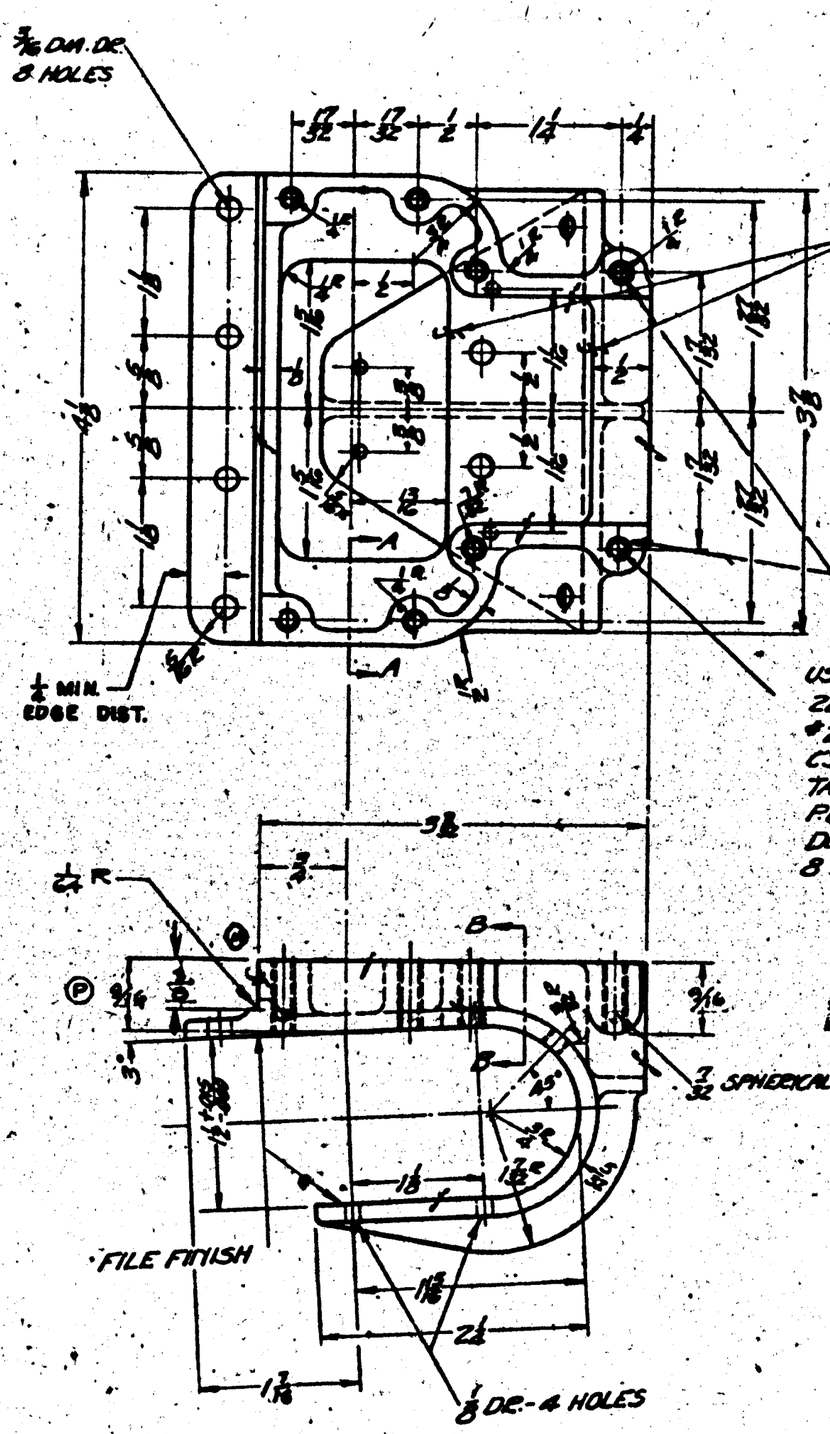

NOTE- MACHINE IN PAIRS WITH 22C033
RAD. OF FILLETS 1/8 UNLESS OTHERWISE SPECIFIED

PBY-5	28C004	2	2					
PBY-5	28C004							
PBY-5	28C004							
PBY-4	28C004							
PBY-1	28C004							
XPBY-1	28C004	2	2					
PBY-5	22C029	2	2					
PBY-5	22C029	2	2					

NAVY APPROVED								
LCW								
CALC. WT. 48	ACT. WT. 52	AIRPLANE MODEL	ASSEMBLY NUMBER	NO. PER A/P	NO. PER AIRPLANE	STANDARD PARTS	NO. REQ'D	PART NUMBER	NO. REQ'D
SCALE 12"=1'0"		DRAWING APPLIES ON:				DETAIL PARTS PER ASSEMBLY:			

MATERIAL	ALUM. ALLOY CASTING	DRAFTSMAN	BOI
SPEC'S. NO.:	46A1 CL.4	STRENGTH & WT. EXAM.	
HEAT TREAT	MF SA-8A-CL4	CHECKED	
FINISH	Z-GA	APPROV. & REL'SD.	

BRACKET - CUTTING - YOKE ASSY. - RECEIVING

CONSOLIDATED AIRCRAFT CORPN. DRWG. No. 22C033

OPPOSITE HAND 22C033-L								
DRAWING APPLIES ON:				DETAIL PARTS PER ASSEMBLY:				
AIRPLANE MODEL	ASSEMBLY NUMBER	DIA. PER ASSY	DIA. PER AIRPLANE	STANDARD PARTS	DIA. REQ'D	PART NUMBER	DIA. REQ'D
PBY-2	22C033	1	1				1
PBY-3	22C033	1	1				1
XPBY-1	22C033	1	1				1
PBY-4	22C033						1
PBY-5	22C033						1

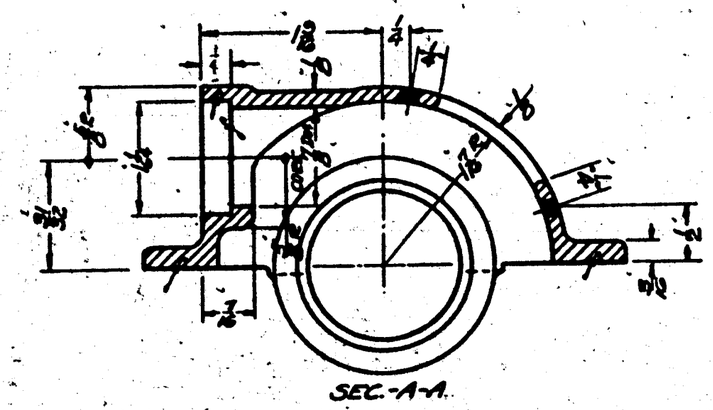

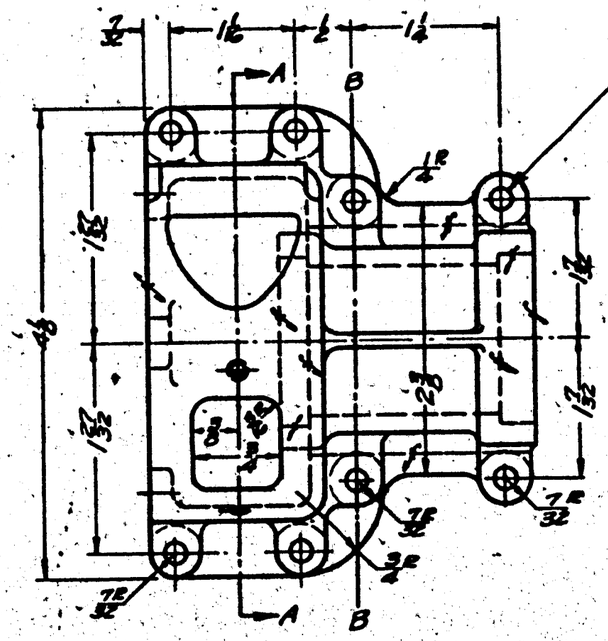

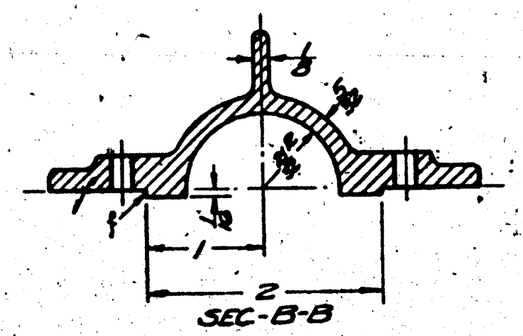

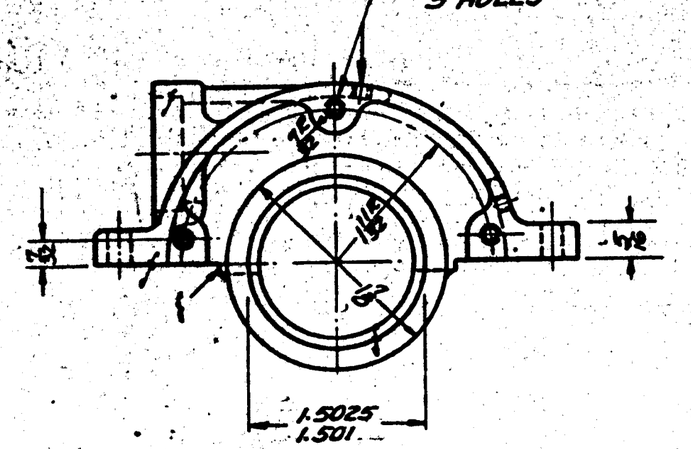

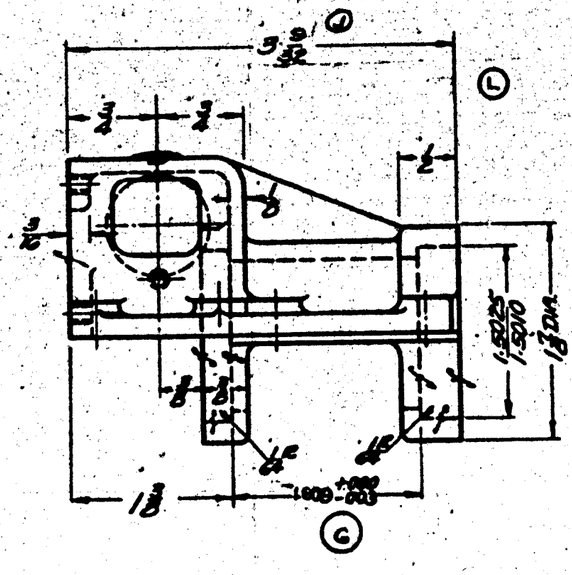

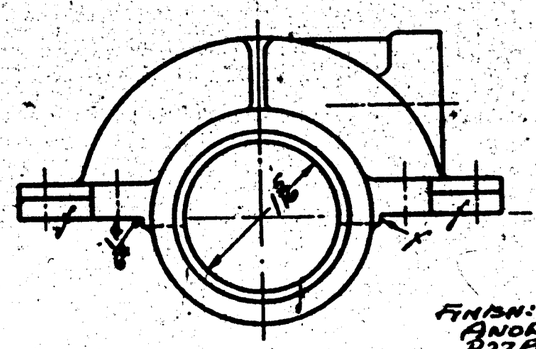

FINISH:
ANODIZE
P27 PRIMER
2 FLAT BLACK ENAMEL

RAD. OF FILLETS ⅛

22C033-L.H.-AS SHOWN

MACHINE IN PAIRS WITH 22C012

L	REMOVED 2 PLACES DIM. NO WT. CHG.	10-20-42	ROSS
K	ADDED SPOT FACE NOTE	6-18-40	BLUM
J	3 3/16 WAS 3 5/16	4-29-37	LARSEN
H	FINISH WAS 2-BAKV	4-29-37	[illegible]
G	[illegible]	7-14-36	[illegible]
F	PBY-1 ADDED	10-4-35	CLARK
E	TRACED UP TO DATE	8-22-35	[illegible]
LTR	CHANGED	DATE	APPR. BY

B.O. 31836
NOTE (ALL)
C.O. 4089

	PBY-5	22C003	1 EA
	PBY-4	22C003	1 EA
	PBY-5	22C003	1 EA
	PBY-3	22C003	
	PBY-3	22C003	
	PBY-2	22C003	
	PBY-4	22C003	
	XPBY-1	22C003	1 1
	PBY-2	22C003	1 1
	PBY-4	22C033	1 1

SAW APPROVED							
CALC. WT. .40	ACT. WT. .40	AIRPLANE MODEL	ASSEMBLY NUMBER	DIA. PER ASSY	DIA. PER AIRPLANE	STANDARD PARTS	DIA. REQ'D

SCALE 4/1 DRAWING APPLIES ON: DETAIL PARTS PER ASSEMBLY:

MATERIAL ALUM ALLOY C57S DRAFTSMAN BOY 8-4-35

SPEC'S. AN NO. 4[illegible]C STRENGTH & WT. EXAM.

HEAT TREAT AMS [illegible]A-CL4 CHECKED

FINISH [illegible] APPRVD. & REL'D.

BEARING-CASTLOCK-TAIL WHEEL

CONSOLIDATED AIRCRAFT CORPN. DRWG. No. [illegible]

[redacted]

[redacted]

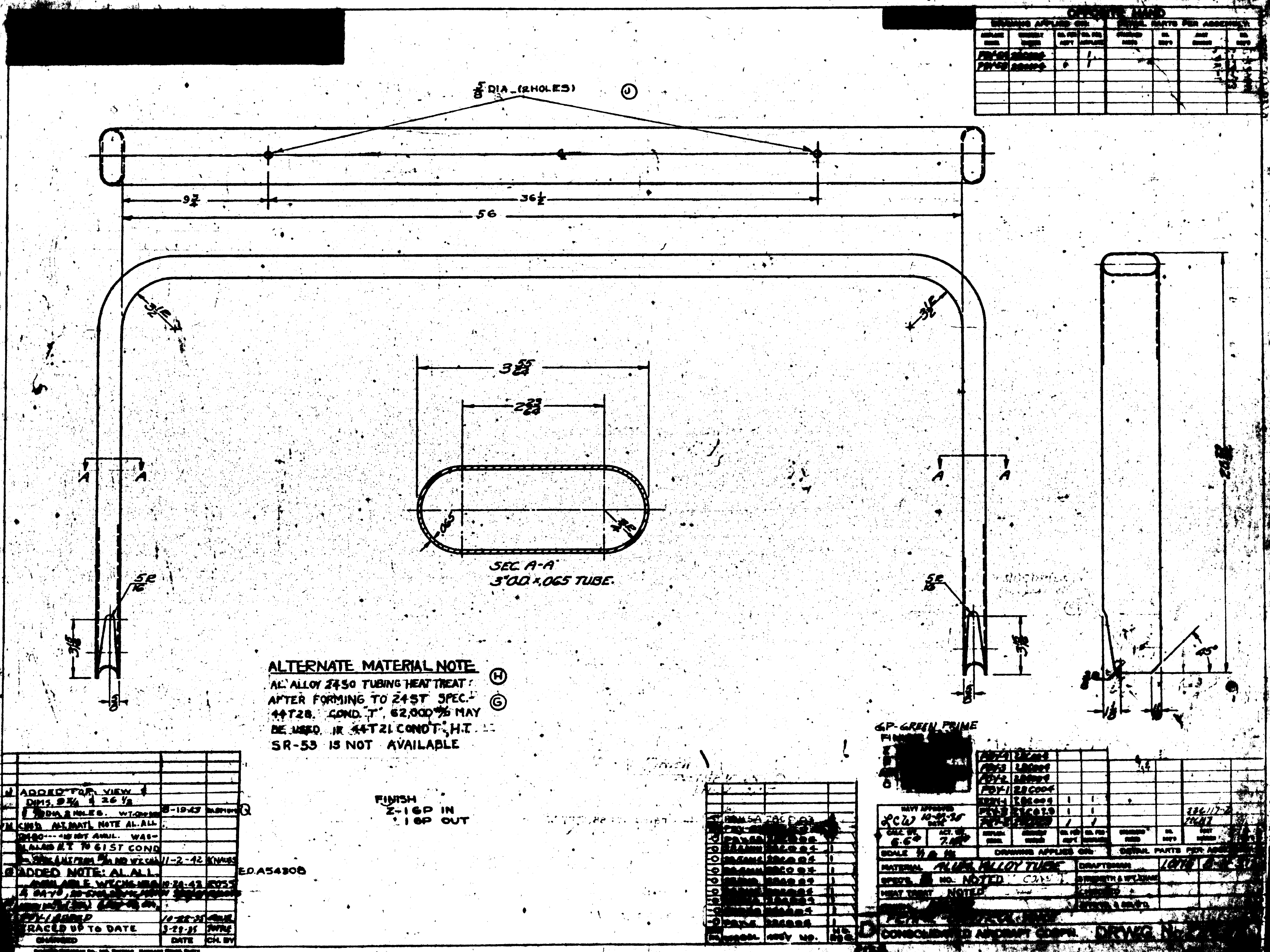

SUPPLIES & EQUIPMENT CLASSIFICATION			
LET	ALTERATION	DATE	BY
E	TRACED UP TO DATE	3-18-37	V.L.B.
F	AN8-D36 No. to AN8-D37	9/12/38	[illegible]
G	REMOVED NOTE CHANGE #" DRILLED	6-22-38	[illegible]
	IN-6 PLUS		
H	AN960A16 ALL CLAD WAS AN	10-30-40	
	960-816		
J	AN4-7 WAS AN4-10		
	AN410 WAS AN4-11		
K	11 9/16 DIM. WAS. 11 3/4	10-30-41	[illegible]

NOTE DO NOT DRILL FOR THESE RIVETS UNTIL OPPOSITE END IS FITTED AND IN PLACE

AN442-D6

REAM TUBE IF NECESSARY

(BELL AIR CORP) E.O. 1636

(BREWSTER) E.O. 140

(BREWSTER) E.O. 191

⅛ DRILL AS SHOWN. FOR DRAIN BOTTOM TUBES ONLY (BREWSTER) E.O. 137

DETAIL "A"

LOCATION OF BOLT HOLE

DETAIL OF -2 SCALE 12"-1'-0"

AN4-10 (J) AN310-4 AN380 B2-2 AN960-416

28C1024-2

AN4-7 (J) AN310-4 AN380 B2-2 AN960-416

28C1024-2

(-3) AL. ALLOY TUBE ⅞ O.D. x.049 x 12 11/16 COND. T ALLOY 24T FINISH Z-3 GP INSIDE - 1 GP

(-2) AL. ALLOY SH. SPACER .064 GA. (SEE DETAIL MAT'L. COND. T ALLOY 24T SPEC. 47A10 FINISH Z-3 GP 1 REQ. EACH FACE OF SPAR

(-5) AL. ALLOY TUBE ⅞ O.D. x.049 x 11 7/16 COND. T ALLOY 24T FINISH - OUTSIDE Z-3 GP INSIDE 1 GP

INBOARD

(-4) AL. ALLOY TUBE ⅞ O.D. x.049 x 11 5/8 (K) COND. T ALLOY 24T FINISH Z-3AKV INSIDE - 1 6P

28C1024-4

28C1024-4

AN4-7 (J) AN310-4 AN380 B2-2 AN960-416

AN8D36 (M) AN310 D8 AN380-3-3 AN960A816 (N)

STA. 210 3/16

20

10

SEE DETAIL "A" FOR HOLE

SEE DETAIL "A" FOR HOLE

12 3/8

AN442-D6

7/16 DRILL ⅞ DEEP

28C023 L.H. INSTALL. SHOWN
28C023-1 R.H. INSTALL. SHOWN

(-6) AL. ALLOY BAR 25/32 DIA. x 2 1/4

SEE B/M FOR PBY-5A & PBY-5B

FINISH 7-1 GP

AN4-7 (J) AN310-4 AN380 B2-2 AN960-416

METHOD OF ATTACHING TUBES TO 28C1023-2 & -4 SCALE 12"-1'-0"

28C1023-2 FOR L.H. & R.H. SUPPORT

LINE REAM .502 .500

6 3/64

10 3/16

9 15/16 REF.

10° REF.

1/16 OUTBOARD
1/8 INBOARD

8 7/64 REF.

28C058

28C1023-4 FOR L.H. & R.H. SUPPORT

FINISH: 6P = GREEN PRIMER Z = ANODIZE

1/16

9 21/32

REAR SHIP

-1	PBY-4	28C2030		AN960A816	1	1	28C1024-4	2	2		
	PBY-4	28C2000		AN960-416	4	4	28C1024-2	2	2		
-1	PBY-3	28C2000		AN380-3-3	1	1	28C1023-4	1	1		
	PBY-3	28C2000		AN380-B2-2	4	4	28C1023-2	1	1		
-1	PBY-2	28C2000		AN310-D8	1	1	28C058	1	1		
	PBY-2	28C2000		AN310-4	1	1	28C023-4	4	4		
-1	PBY-1	28C1000		AN8D36	1	1	28C023-3	1	1		
	PBY-1	28C1000		AN4-10	1	1	28C023-4	1			
-1	XP3Y-1	28C001		AN4-7	3	3	28C023-2	2	2		
	XP3Y-1	28C001									
O.H.	MODEL	NEXT ASS'Y	REQ.	STD PARTS	L.H. REQ.	R.H. REQ.	PART NO.	L.H. REQ.	R.H. REQ.		
REQUIREMENTS PER AIRPLANE				MAT.	PARTS LIST PER ASS'Y						
							MILLER				
NOTED		NONE		TOUCH UP	6-27-38	9-23-37					
MATERIAL		HEAT TREAT		FINISH	DRAFT	CHECK	EXAM	ENG.			

REPLACES	
REPLACED BY	
LIMIT ON DIMENSIONS UNLESS OTHERWISE SPECIFIED	+ −
APPROVED	12-27-35 DATE
CALC. WT. 3.81	ACT. WT.
SCALE 6"=1'-0"	
AC	
NAVY NOTED	
MATERIAL	
CONSOLIDATED AIRCRAFT CORP. BUFFALO, N.Y.	
STAMP PT. No. WHERE SHOWN	

OPRHAND 28C023-1

BELLCRANK INSTALL.-CONTROL AIELERON OUTER PANEL OUTBOARD

CODE D SIZE

28C023

R

28C023

SUPPLIES & EQUIPMENT CLASSIFICATION			
LET	ALTERATION	DATE	BY
B	TRACED TO DATE	3-18-37	GDMK
C	CHANGED DIM. FROM .377 TO .375 & ADDED RING STAKE TO NOTE	7-31-41	[illegible]
D	(1) REQ'D IR. BLOCK LIMITED PBY-5 & PBY-5A TO NOS 1 & 2 (2) ADD WT. CHG	6/18/43	JWM

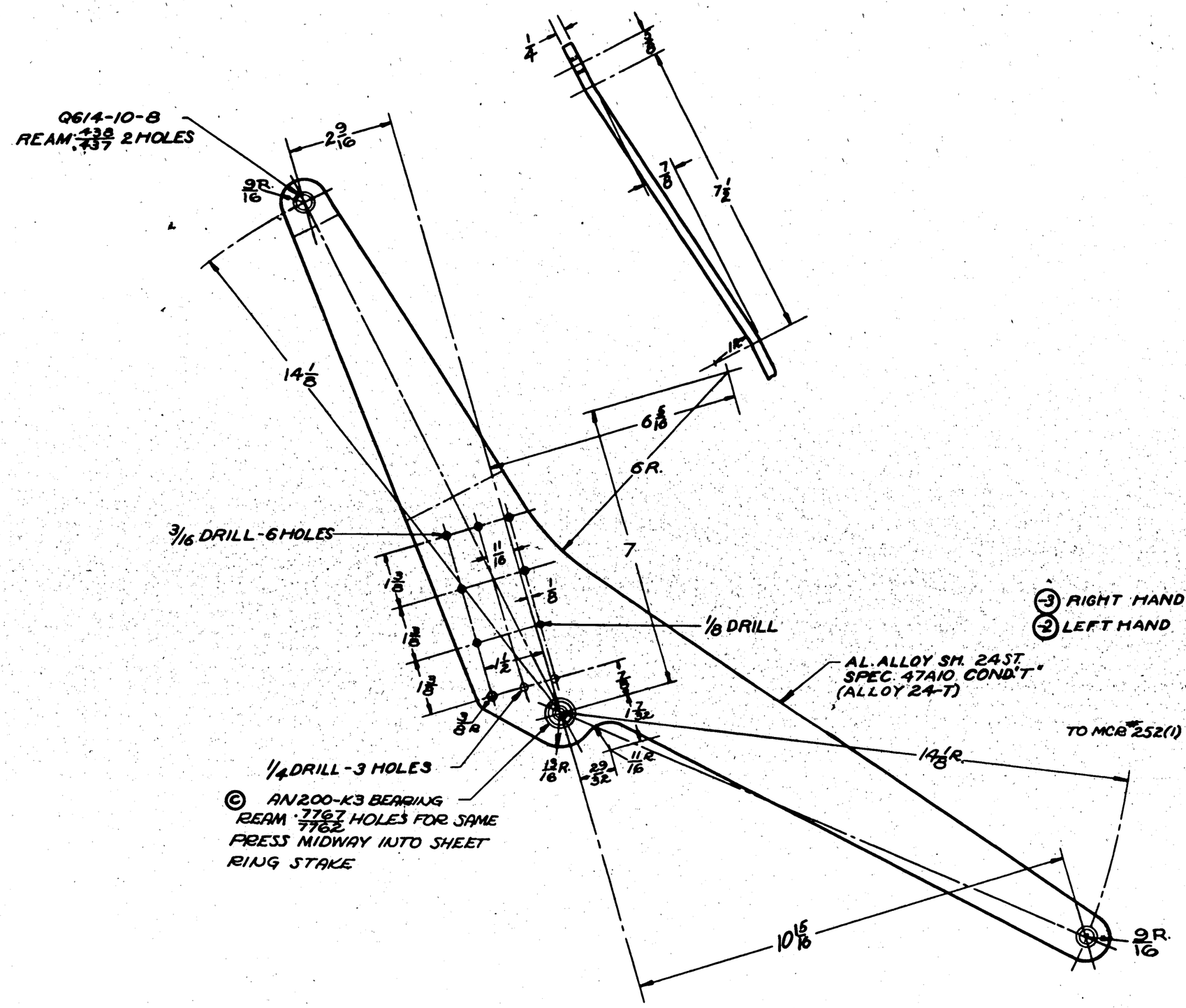

-3 RIGHT HAND
-2 LEFT HAND

FINISH CODE	
Z	ANODIC TREATMENT
P	R-27 PRIMER
AP	ALUMINIZED PRIMER
C	CADMIUM PLATE
GP	GREEN PRIME

-1	PBY-5A	28C004	1								
-0	PBY-5A	28C004	1								
-1	PBY-5	28C004	1								
-0	PBY-5	28C004	1								
-R	PBY-5A	28C004	1								
-L	PBY-5A	28C004	1								
4/R	28-5MN	28C004	1								
4/R	28-5ME	28C004	1								
4/R	28-5MC	28C004	1								
4/R	28-5MA	28C004	1								
4/R	28-5AMN	28C004	1								
4/R	28-5AMC	28C004	1								
-1	PBY-4	28C004									
	PBY-4	28C004									
-1	PBY-3	28C004									
	PBY-3	28C004									
-1	PBY-2	28C004									
	PBY-2	28C004									
-1	PBY-1	28C004								Q614-10-8	2	2
	PBY-1	28C004										
-1	XPBY-1	28C004	1							28C026-3		1
	XPBY-1	28C004	1	AN200-K3	1	1				28C026-2	1	
MODEL		NEXT ASSY.	REQ.	ST'D PARTS	LH REQ.	RH REQ.		PART NO.			LH REQ.	RH REQ.

REPLACES			
REPLACED BY			
LIMIT ON DIMENSIONS UNLESS ± OTHERWISE SPECIFIED			
APPROVED 10-22-35 DATE			
CALC. WT. 1.65 ACT. WT.			
SCALE 6" 1'-0"			
AQ			
NAVY NOTED.	NOTED	NONE	
MATERIAL	SPEC.	HEAT TREAT	FINISH
REQUIREMENTS PER AIRPLANE		MAT.	PARTS LIST PER ASSY.
		Z-GP OW-28-3	9-17-34
		BEFORE ASSEM.	3-8-37 HRR
			DRAFT CHECK EXAM. ENG.

CONSOLIDATED AIRCRAFT CORP BUFFALO, N.Y.
STAMP PT. NO. WHERE SHOWN

NAME ARM ASSEM.- CONTROL YOKE

OPP. HAND 28C026-1

Size D 28C026

R 920582

28C026 LEFT HAND AS SHOWN
28C026-1 RIGHT HAND OPPOSITE

SUPPLIES & EQUIPMENT CLASSIFICATION			
LET	ALTERATION	DATE	BY
Ø	TRACED UP TO DATE	5-18-[illegible]	[illegible]

.081 X 3 X 6 AL ALLOY SHEET ④
.051 X 3 X 6 AL ALLOY SH'T
2430 SPEC: 47A10 COND A
ALLOY (24A)
FINISH: Z-P-2 GP
H.T.: SR-53 COND'T

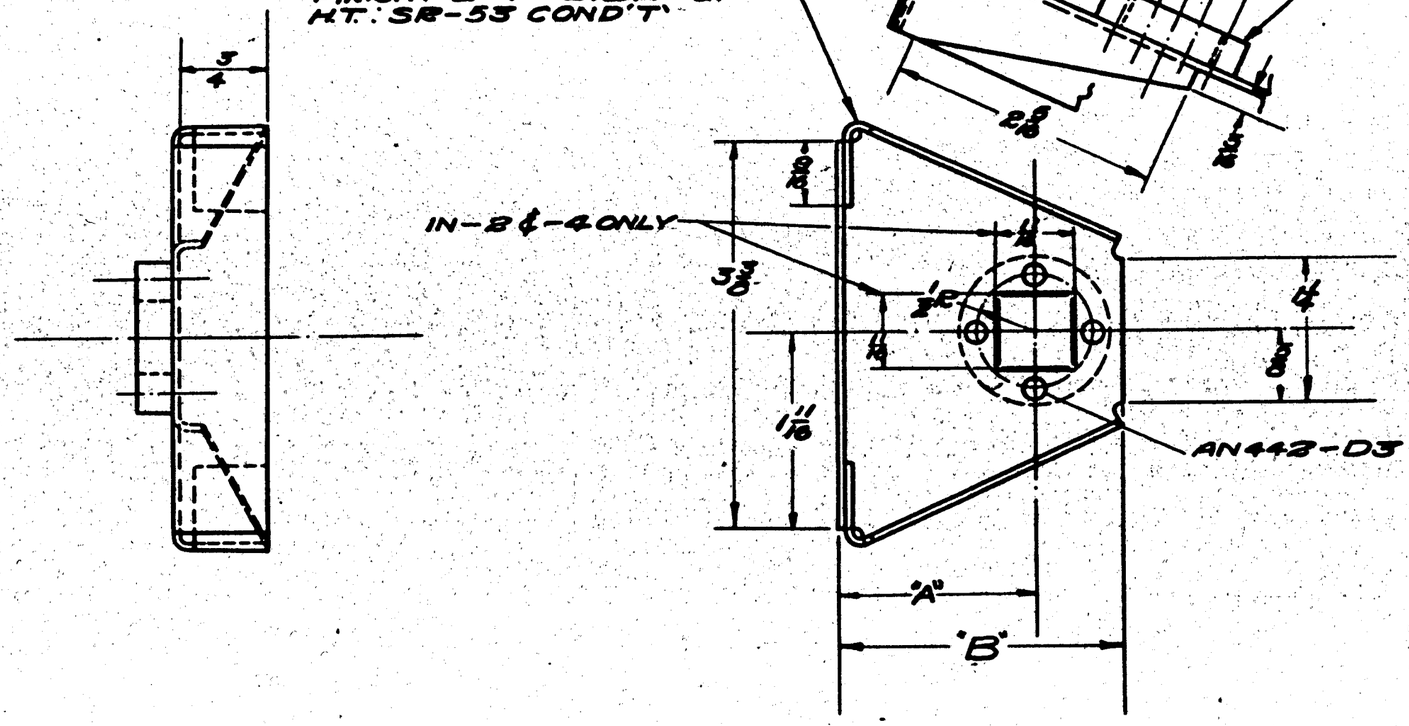

CP-GREEN PRIME
FINISH [illegible]

BEND RADII - 1/16

	PBY-5A	28T2029	2												
	PBY-5B	28T2029	2												
-5	PBY-4	28B1006													
	PBY-4	28T2029													
-5	PBY-3	28B1006													
	PBY-3	28T2029											28C2057	1	1
-5	PBY-2	28B1006													
	PBY-2	28T2029													
-3	PBY-1	28B1006													
	PBY-1	28T1006											-4	1	1
	PBY-1	28T2028										AN442-D3-4	-5	1	1
	O.H.	MODEL		NEXT ASSY.		REQ.		ST'D PARTS		LH	RH	PART NO.			
	REQUIREMENTS PER AIRPLANE							MAT.		PARTS LIST PER ASSY.					
	NOTED			NOTED		NOTED									
	MATERIAL			SPEC.		HEAT TREAT		FINISH		DRAFT		CHECK		ENGR.	ENG.

28C073-4	1 7/8	2 5/16	28C073-5
28C073-2	1 11/16	2 1/16	28C073
PART NO.	"A"	"B"	NEXT ASS'Y

REPLACES
REPLACED BY
UNLESS OTHERWISE SPECIFIED DIMENSIONS ARE ± / TOLERANCES

AMD-22-39 DATE
DRAWN [illegible] ACT. WT.
SCALE 8" = 1'-0"
AC
NAVY

CONSOLIDATED AIRCRAFT CORP. BUFFALO, N. Y.
STAMP PT. No. WHERE SHOWN

NAME SUPPORT STAB.-FLAP OPER-ATG. SCREW
OPP. HAND 28C027
D 28C0[illegible]

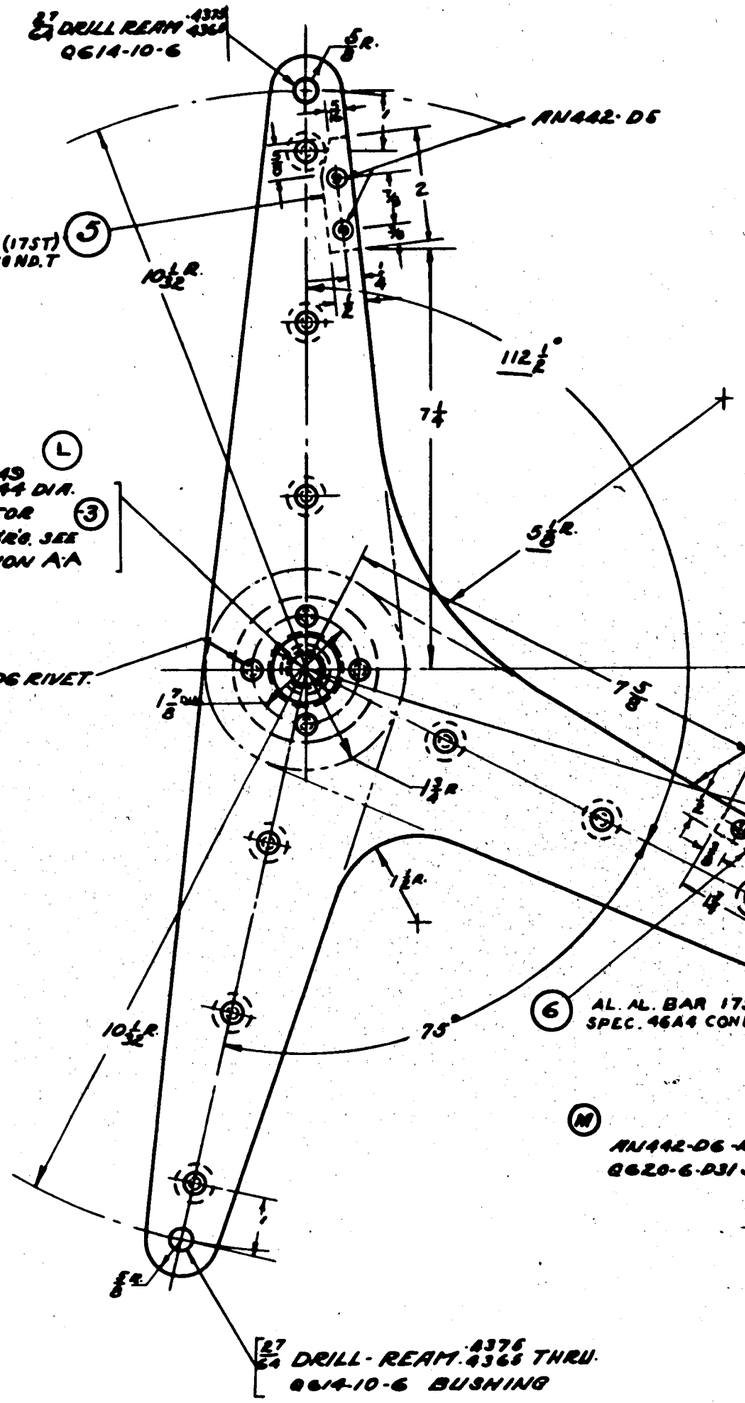

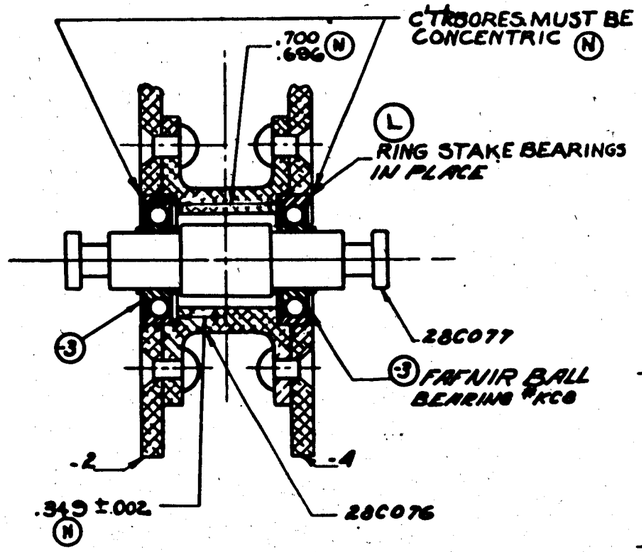

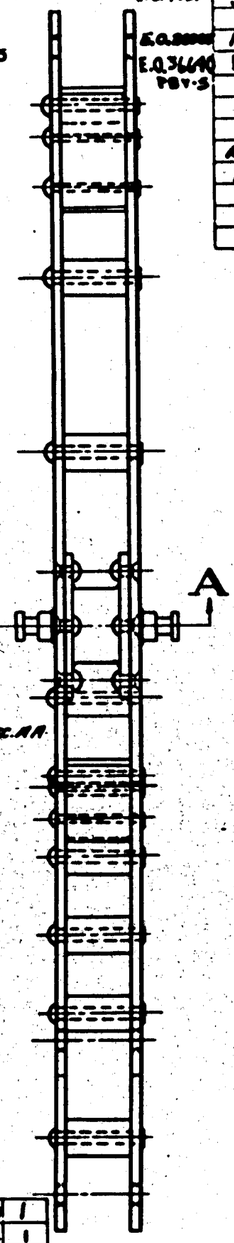

SUPPLIES & EQUIPMENT CLASSIFICATION			
LET	ALTERATION	DATE	BY
G	TRACED TO DATE	9-16-37	
H	1 3/16 DIM. WAS 1 1/8	1-20-38	
	PBY-2-3 NELF ASSY WAS 28C1000	"	"
J	ADDED DIM. SHOWING AMOUNT OF BUSHING	4-4-38	
K	1 3/16 WAS 1 1/8	4/14/40	
L	1.1249 WAS 1.124 1.244 WAS 1.235	4-21-41	
	3" ± 1/8 WAS 2", IN SEC. A-A.		
	RING STAKE BEARINGS WAS STAKE DIE.		
	ON PC DWG.		
M	REMOVED NOTE "4 HOLES DRILL THRU"	12-26-41	
N	REM'D DIM 31/32 & "5/16 DEEP. ADDED DIM. .343 ± .002 & 15/32 TO SECT'N A-A		
	ADDED NOTE: "C'TBORES MUST BE CONCENTRIC"	4-3-42	

FINISH CODE	
Z	ANODIC TREATMENT
P	P-27 PRIMER
AP	ALUMINIZED PRIMER
C	CADMIUM PLATE
GP	GREEN PRIME

	PBY-5B	28C5500	1
CONT'D 28476 —	PBY-5A	28C5504	1
CONT'D 70496 & 77713 —	PBY-5A	28C5700	1
CONT'D 81878 —	PBY-5	28C5504	1
CONT'D 70496 —	PBY-5	28C5000	1
	28-5AMC	28C5750	1
	28-5AMC	28C5780	1
	28-5MN	28C5800	1
	28-5MC		1
	28-5MA		1
	28-5MB	28C5300	1
O.H.	MODEL	NEXT ASSY	REQ.

	PBY-5B	28C5500				
	PBY-4	28C2000				
	PBY-3	28C2000				
	PBY-2	28C2000	AN442-D4	4		
	PBY-1	28C1000	AN442-D6	N		
	XPBY-1	28C001	AC425-D6	8		
O.H.	MODEL	NEXT ASSY.	REQ.	ST'D PARTS	LH REQ.	RH REQ.

PART NO.	LH REQ.	RH REQ.
28C078-6	1	
28C078-5	1	
28C078-4		1
QC12-8-6	2	
QCBD-6-D31	11	
QC14-10-6	4	
28C078-3	2	
28C078-2	1	
28C077	1	
28C076	1	

REPLACES

REPLACED BY

LIMIT ON DIMENSIONS UNLESS OTHERWISE SPECIFIED ±

APPROVED 10-22-38 DATE

CALC. WT. 3.87 ACT. WT.

SCALE 6" = 1'-0"

AC

NAVY NOTED

MATERIAL

REQUIREMENTS PER AIRPLANE			MAT.	PARTS LIST PER ASSY.
				3-16-37
NOTED	NOTED	2 GP		3-18-37
SPEC.	HEAT TREAT	FINISH		DRAFT CHECK EXAM. ENG.

CONSOLIDATED AIRCRAFT CORP. BUFFALO, N.Y.

STAMP PT. No. WHERE SHOWN

NAME BELLCRANK-ELEVATOR CONTROL - ASSEMBLY

OPP. HAND NONE

SIZE D DWG. 28C078

ALL AL. ALLOY SHEET SPEC. 47A10 (CONDITION T) ALLOY 24T EXCEPT AS NOTED
ALL AL. ALLOY EXTRUSIONS SPEC. (CONDITION T) ALLOY 24T EXCEPT AS NOTED
HEAT TREAT ALL CONDITION A MATERIAL PER. SPEC. 5R53
RIVET AL. ALLOY EXCEPT AS NOTED

R 8/10/382

LET	ALTERATION	DATE	BY

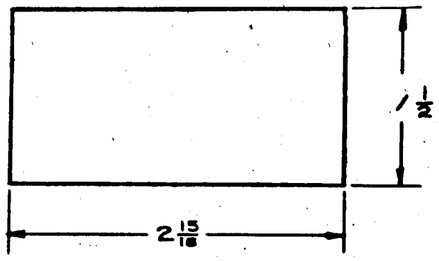

DETAIL -2

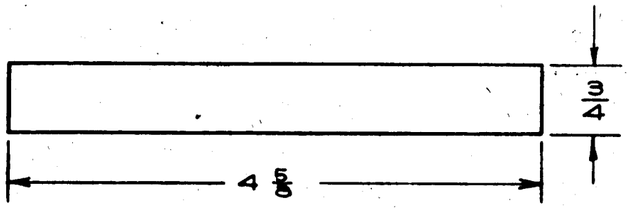

DETAIL -3

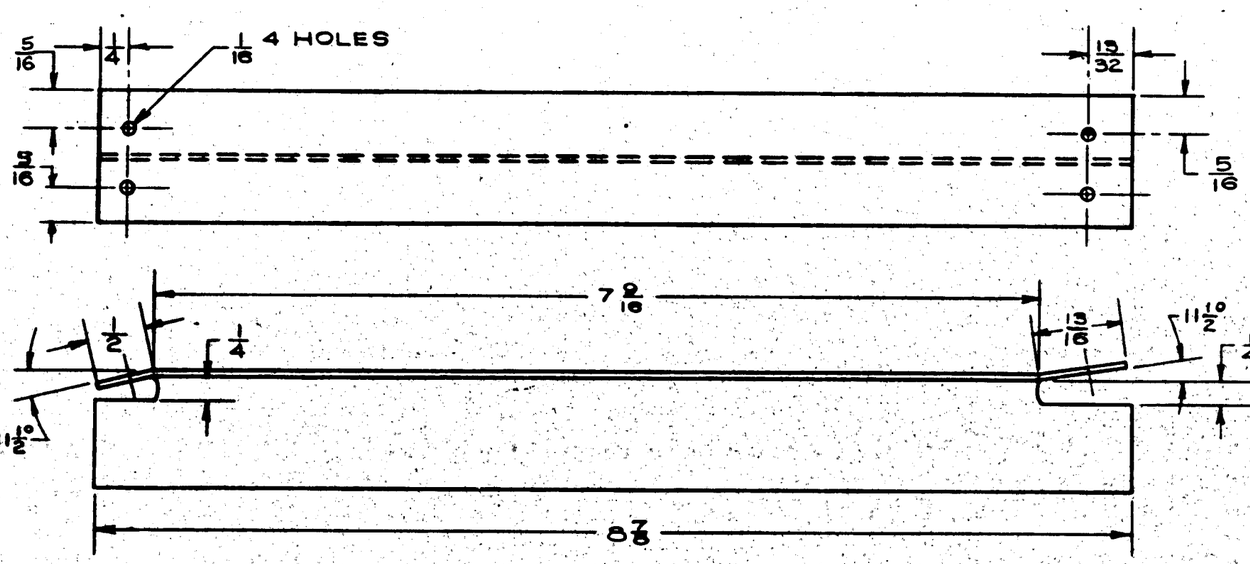

DETAIL -5

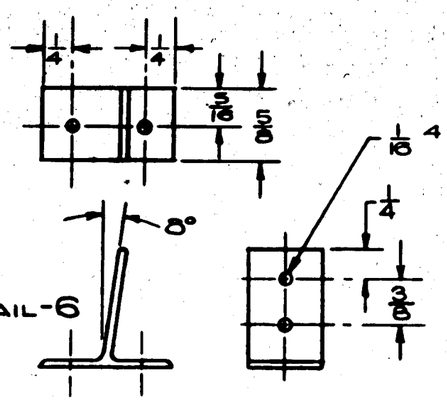

DETAIL-6

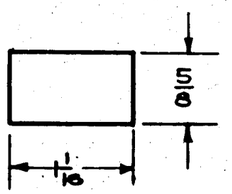

DETAIL -4

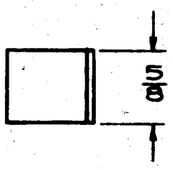

DETAIL -8

DETAIL -7

SECTION AA
TYPICAL

SEE SHEET #1
FOR B/M

ASSY. DASH No.	MODEL	NEXT ASSY.	REQ'D
REQUIREMENTS PER AIRPLANE			
REPLACES		CALC. WT.	
REPLACED BY		ACT. WT.	
UNLESS OTHERWISE DIMENSIONS SPECIFIED ± 1/32		SCALE 12"=1'0"	
STAMP PART NUMBER WHERE SHOWN			

PART No.	STOCK	MATERIAL	SPEC.	LH REQ.	RH REQ.	LH REQ.	RH REQ.	LH REQ.	RH REQ.	LH REQ.	RH REQ.	LH REQ.	RH REQ.
PARTS LIST PER ASSY.				-0		-2		-3		-4		-5	

A C		JOHNSON					
NAVY		6/17/43					
HEAT TREAT	FINISH	DRAFT	CHECK	STRUCT	MAT	APPROV	ENG.

NAME INSTALLATION-AILERON PULLEY BR'K'T - B'LKH'D #5

OPP. HAND

SIZE D DWG. 28C1015

SHEET 2 OF 2

CONSOLIDATED AIRCRAFT CORP. SAN DIEGO, CALIF.

R 5101282

SUPPLIES & EQUIPMENT CLASSIFICATION			
LET	ALTERATION	DATE	BY
A	TRACED UP TO DATE		
B	IN B/M REPLACED "AL. ALLOY C-ST'D" "M-186, T 42,000 PSI/SQ. IN." WITH "NOTED." ADDED MATERIAL NOTE. NO WT. CHG.	9-27-43	LACHY

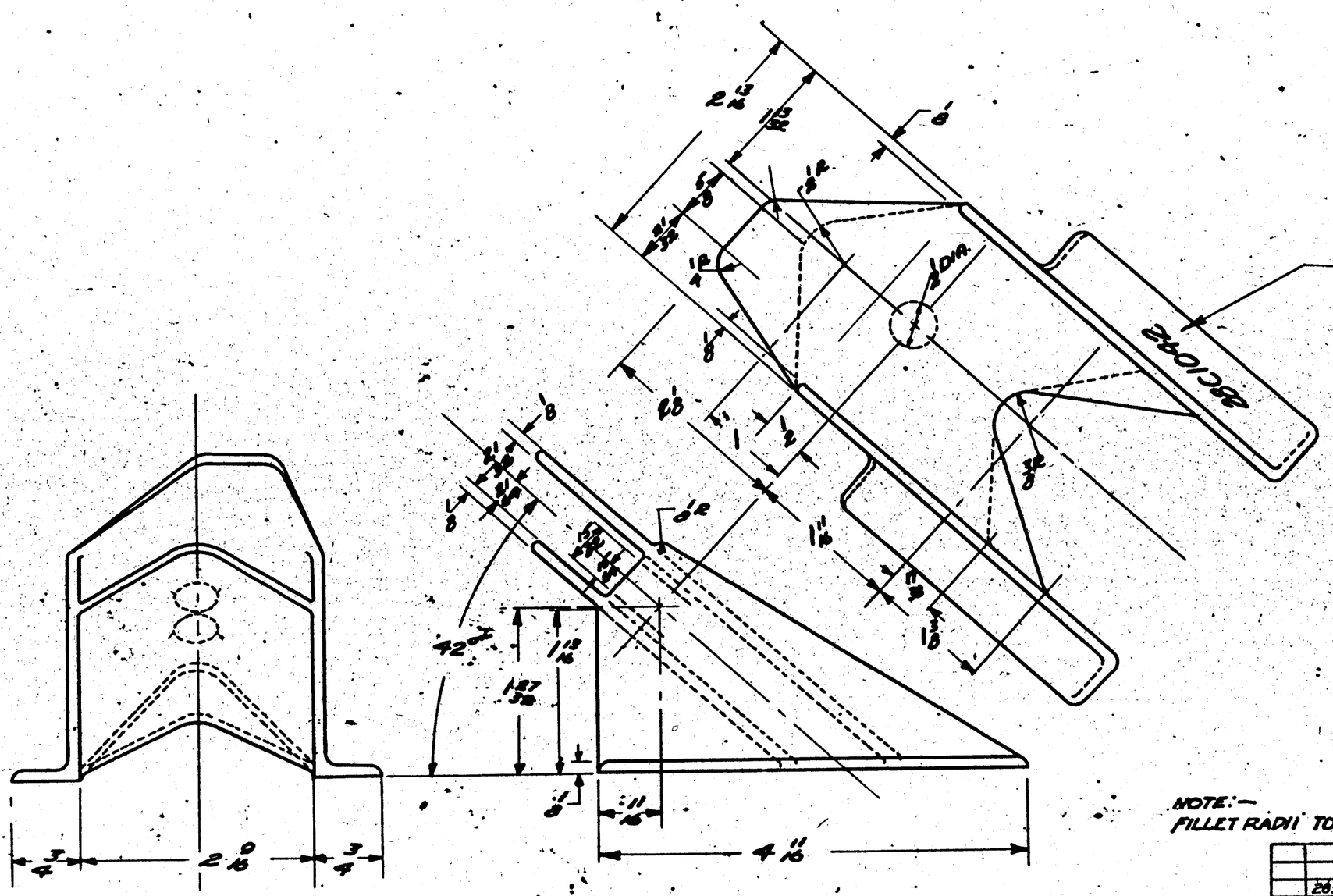

NOTE:—
FILLET RADII TO BE 1/8

NOTE:—
(8) 1- MATERIAL MAY BE:
(A) AL. ALLOY CASTING, 220T4, SPEC. AN-QQ-A-392, T.S. 42,000 P.S.I. OR
(B) AL. ALLOY CASTING, 195T6, SPEC. AN-QQ-A-390, CL. II, T.S. 32,000 P.S.I.

											LH REQ.	RH REQ.
	28SAMN	28C1043	1									
	28SAMC	28C1043	1									
	28-SMEMN	28C1043	1EA									
	28-SMAMC	28C1043	1EA									
	PBY-5	28C1043	1									
	PBY-5A	28C1043	1EA									
	PBY-4	28C1043										
	PBY-3	28C1043										
	PBY-2	28C1043										
	PBY-1	28C1043										

REPLACES	APP. [redacted] 9-19-38 DATE						
REPLACED BY	DES. CALC'D.	ACT. WT.	O.H.	MODEL	NEXT ASSY.	REQ.	ST'D PARTS
LIMIT OR DIMENSIONS UNLESS OTHERWISE SPECIFIED ±	SCALE 48" = 1'0"		REQUIREMENTS PER AIRPLANE			MAT.	PARTS LIST PER ASSY.
	ENG.						
	NAVY NOTED		NOTED	NOTED		NONE	
	MATERIAL		SPEC.	HEAT TREAT		FINISH	
CONSOLIDATED AIRCRAFT CORP. BUFFALO, N. Y.	GRAIN PT. NO. WHERE SHOWN		NAME BRACKET - (CASTING) FLAP CONTROL - STAB. PULLEY				

PART NO. [redacted]
9-9-38 DRAFT
CHECK
ENGR.
ORIG.
OFF. USED

SUPPLIES & EQUIPMENT CLASSIFICATION			
LET	ALTERATION	DATE	BY
B	TRACED UP TO DATE	[illegible]	[illegible]
C	ARROW WAS TO BOTTOM SURFACE	4-10-41	SALS
	NOTES ADDED. SPOTFACE 5/8 DIA.	"	"
	ADDED.	"	"
D	CHANGED NOTE TO READ SPOT FACE 9-9-41		
	5/8 DIA. 2 PLACES TO MAINTAIN 13/32 DIM. AT REAMED HOLE. WAS		
	SPOT FACE 9/16 DIA. 2 PLACES TO OBTAIN .125 THICKNESS AT BOSSES FOR SPACER.		

E.O. 3079 A
PBY-5 & 5A-5

NORTHROP E.O. 2816

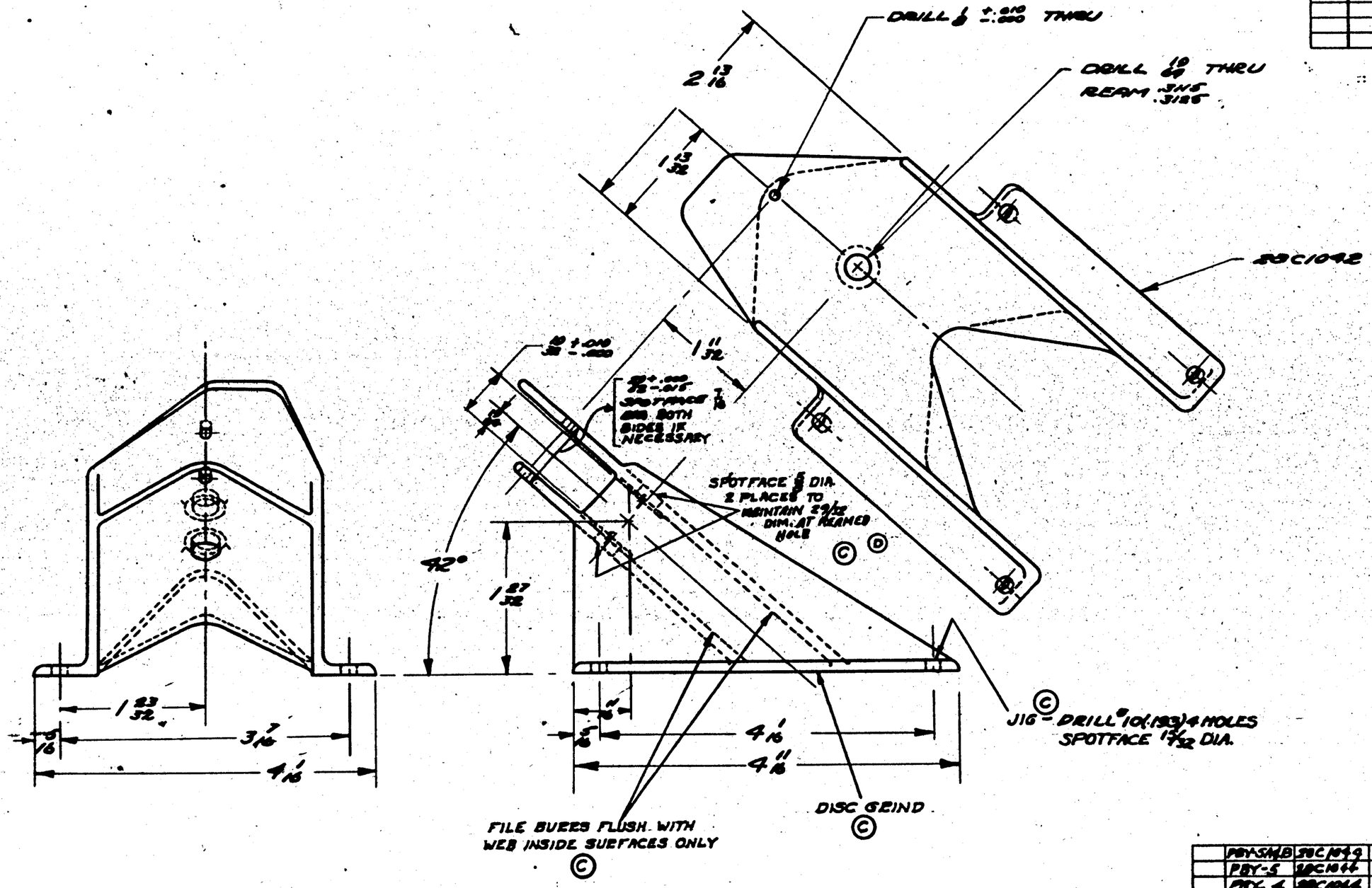

GP-GREEN PRIME
F[redacted]

	PBY-5A/B	SPC1042	IER
	PBY-5	SPC1044	
	PBY-4	SPC1044	
	PBY-3	SPC1044	
	PBY-2	SPC1044	
	PBY-1	SPC1044	

O.H.	MODEL	NEXT ASSY.	REQ.	ST'D PARTS	LH REQ.	RH REQ.	PART NO.	LH REQ.	RH REQ.
							SPC1042	1	

REQUIREMENTS PER AIRPLANE

REPLACES

REPLACED BY

LIMIT OR DIMENSIONS UNLESS OTHERWISE SPECIFIED ± [redacted]

APP. [redacted]-10-39 DATE

CALC. WT. [redacted] ACT. WT.

SCALE 12" = 1'0"

MAT. -

NAVY NOTED	NOTED	NONE	GP	PARTS LIST PER ASSY.
MATERIAL	SPEC.	HEAT TREAT	FINISH	DRAFT [illegible] CHECK EXAM. ENG.

CONSOLIDATED AIRCRAFT CORP. BUFFALO, N. Y.

STAMP PT. No. WHERE SHOWN

NAME BRACKET - FLAP CONTROL TROL STAB. - PULLEY

OPP. HAND

DRAWING SPC1042

SUPPLIES & EQUIPMENT CLASSIFICATION			
LET	ALTERATION	DATE	BY
C	TRACED TO DATE	3-17-37	ORIG.
D.	AN392-31 WAS AN392-29	9-24-40	DIST

E.O.360

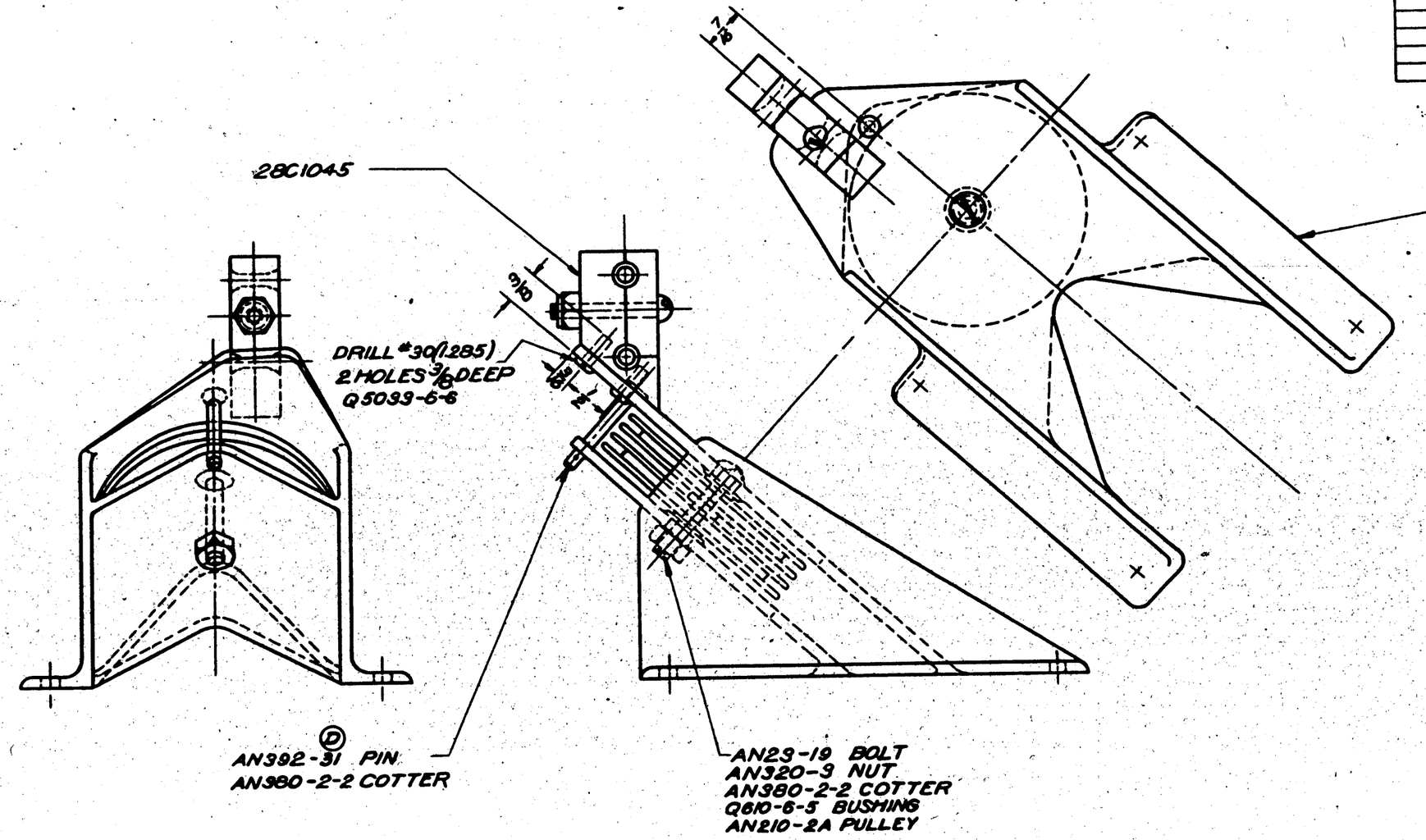

	PBY-5B	28T2029	1							
	PBY-3&5A	28T2029	1 FA	AN392-31	1					
	PBY-4	28T2029		AN380-2-2	2		Q5033-6-6	2		
	PBY-3	28T2029	1	AN320-3	1		Q610-6-5	2		
	PBY-2	28T2029	1	AN210-2A	2		28C1046	1		
	PBY-1	28T1009	1	AN23-19	1		28C1043	1		
O.H.	MODEL	NEXT ASSY.	REQ.	STD PARTS	LH REQ.	RH REQ.	PART NO.	LH REQ.	RH REQ.	

REPLACES	APPR. [redacted] 8-36 DATE				
REPLACED BY	CAL. WT. .68	ACT. WT.			
LIMIT ON DIMENSIONS UNLESS OTHERWISE SPECIFIED ± −	SCALE 12"=1'-0"	REQUIREMENTS PER AIRPLANE		MAT.	PARTS LIST PER ASSY.
[redacted]	AC				3-6-36 3-17-36
	NAVY NOTED	NOTED	NONE	NONE	Gaulke 3-17-37 Greco
	MATERIAL	SPEC.	HEAT TREAT	FINISH	DRAFT CHECK EXAM. ENG.

CONSOLIDATED AIRCRAFT CORP. BUFFALO, N. Y.

STAMP PT. No. WHERE SHOWN

NAME BRACKET ASSEMBLY-FLAP CONTROL STAB.-PULLEY

OPP. HAND

SIZE D SCALE 28C1044

SUPPLIES & EQUIPMENT CLASSIFICATION			
LET	ALTERATION	DATE	BY
B	TRACED UP DAYS	3-14-42	V.I.B.
C	MAT'L WAS CODE "T" NOW M-TB.	3-19-42	
D	ON FACE OF BND, REMOVED [illegible] DIM. CHG [illegible] DIM. WAS [illegible] DIM., 28° DIM. WAS 25°.		
E	ON [illegible] WAS [illegible] ADDED DRILL NOTE.	5-29-42	
F	ADDED -11 [illegible] I.D. RIVALE (AN 425-D4 TO -12 (WT. CHG. NEG.)	6-6-42	
G	REMOVED DIMS. [illegible]	3-14-42	
H	DIMS. 1/2 WERE 7/16, 1 5/8 WAS 1 1/4. NOTE "C'SINKETC" WAS ON END VIEW; AN425BSWAS AN 425 D4) ADDED AC 366-F428 NO WT CHG.	3-27-42	
		6-9-42	

A3466 P

PBY-5A, 28-5, 28-5A E.O. A5736

E.O. A21900 R

E.O. A41641

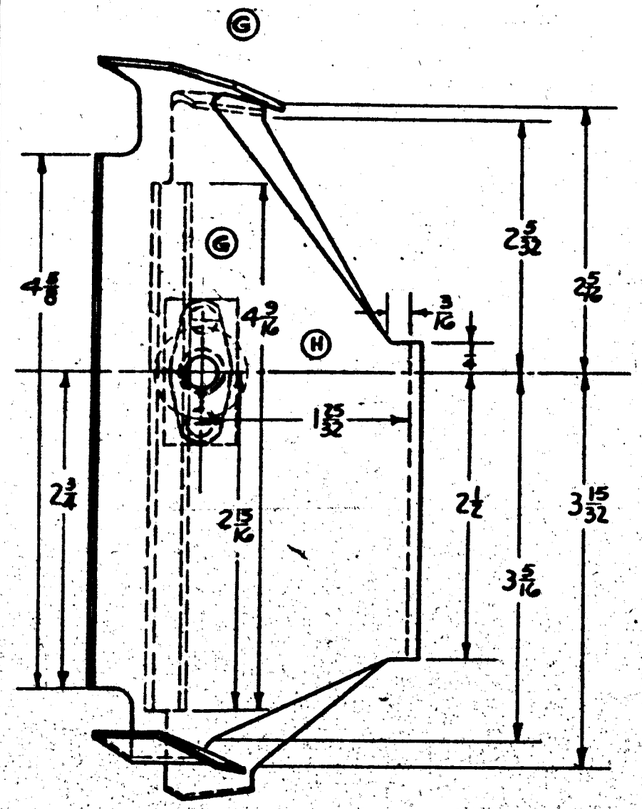

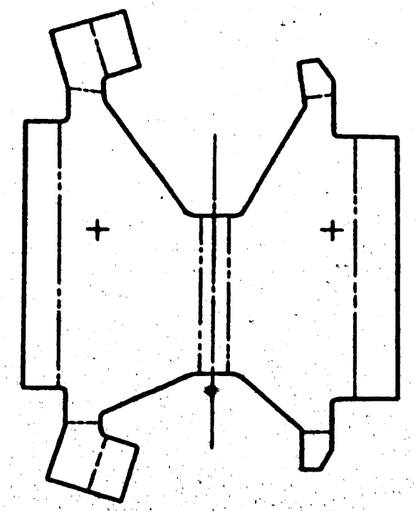

FLAT PATTERN OF -12
NO SCALE

28C1049 L.H. AS SHOWN
28C1049 R.H. OPPOSITE

ALL RADII TO BE 5/64

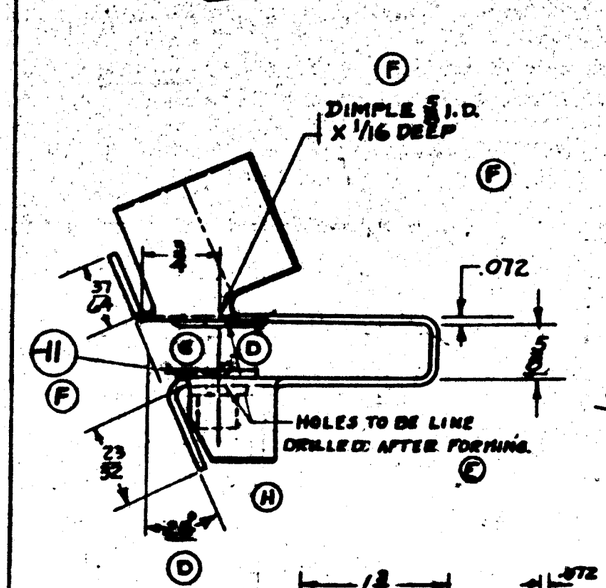

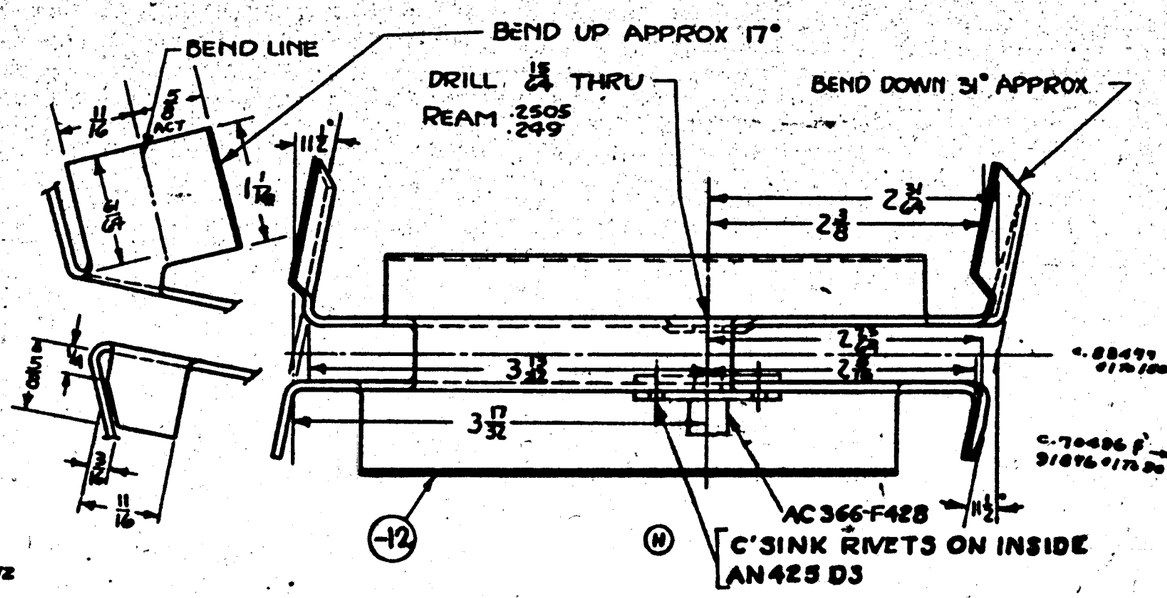

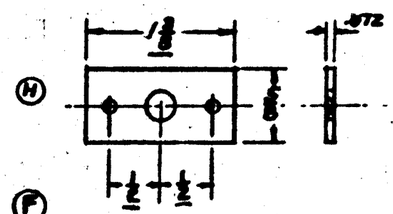

DETAIL -11 (2 REQ'D)
.072 AL AL 24 ST.

-L	28-5AMN	28B1093	1				
R	28-5AMN		1				
-L	28-5AMC		1				
R	28-5AMC		1				
-L	28-5MN		1				
R	28-5MN		1				
-L	28-5ME		1				
R	28-5ME		1				
-L	28-5MC		1				
R	28-5MC		1				
-L	28-5MA		1				
R	28-5MA		1				
-L	PBY-5B		1				
R	PBY-5B		1				
-L	PBY-5A	28B1093	1				
R	PBY-5A	28B1093	1				
-L	PBY-5	28B1093	1				
R	PBY-5	28B1093	1				
-L	PBY-4	28B1093	1				
R	PBY-4	28B1093	1				
-L	PBY-3	28B1093	1	AN425-D3			
R	PBY-3	28B1093	1	AC366-F428			
-L	PBY-2	28B1093	1				
R	PBY-2	28B1093	1				
-L	PBY-1	28B1093	1				
R	PBY-1	28B1093	1				

.88491 .87500

.70496 .69676

REPLACES	APPR. [redacted] 2-21-36 DATE							
REPLACED BY	CALC. WT. 25	ACT. WT.	G.N.	MODEL	NEXT ASSY.	REQ.	SYS. PARTS	SPEC. NO. REQ.	PART NO.
LIGHT ON [redacted]	SCALE 3/4" = 1'-0"		REQUIREMENTS PER AIRPLANE				MAT.	PARTS SUPPLIED ASSY.	
[redacted]									
[redacted]	[redacted] FACTORY ORDER [redacted]		[redacted]				Z-P-Z	[redacted]	
MATERIAL	SPEC.	HEAT TREAT	FINISH						

CONSOLIDATED AIRCRAFT CORP. BUFFALO, N.Y.

NAME
BRACKET-RUDDER CONT.
FIN-FULLET

[redacted]

SUPPLIES & EQUIPMENT CLASSIFICATION			
LET	ALTERATION	DATE	BY
C	TRACED UP TO DATE	[illegible]	[illegible]
D	REVERSED NOTES; PRICK PUNCH SMALL FLANGE & DRILL LARGE FLANGE	6-5-37	V.I.B

NOTES:-
ALL WEBS ARE TO BE $\frac{1}{8}$.
ALL FILLETS AND RADII NOT NOTED TO BE $\frac{1}{8}$ R.

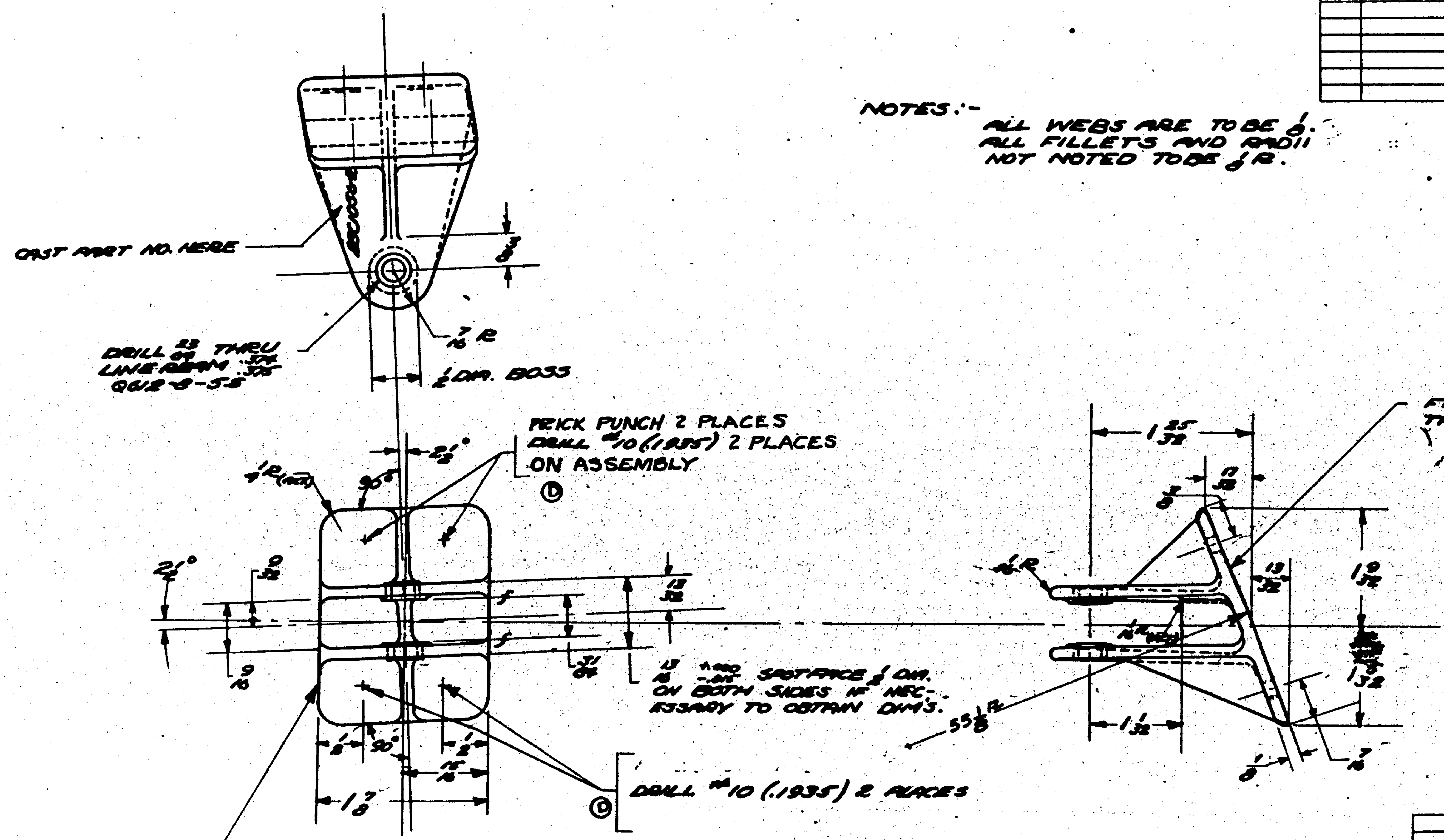

[redacted]

REPLACES	
REPLACED BY	
LIMIT ON DIMENSIONS UNLESS OTHERWISE SPECIFIED	+ −

[redacted]

	MODEL	NEXT ASSY.	REQ.
	PBY-5B	28C1013	1
	PBY-5A	28C1013	1
	PBY-4	28C1013	
	PBY-3	[illegible]	
	PBY-2	[illegible]	
	PBY-1	[illegible]	
O.H.	MODEL	NEXT ASSY.	REQ.

APPROVED [redacted]-4-36 DATE					
CALC. WT. .18	ACT. WT.				
SCALE 12" = 1' 0"	REQUIREMENTS PER AIRPLANE		MAT.	PARTS LIST PER ASSY.	
			GP	[illegible]	CN
NOTED	NOTED	NOTED	Z-F-[illegible]	[illegible]	3-12-37
MATERIAL	SPEC.	HEAT TREAT	FINISH	DRAFT	CHECK / EXAM.

ST'D PARTS	REQ. LH	REQ. RH	PART NO.	REQ. LH	REQ. RH
			[redacted]-2		
			-2		

CONSOLIDATED AIRCRAFT CORP. BUFFALO, N.Y.

STAMP PT. No. WHERE SHOWN

NAME PULLEY HOUSING
RUDDER CONTROL - BLKHD 4-3

OPP. HAND

D 28C10[illegible]

SULLIVAN-McKEEGAN CO., INC. BUFFALO
IMPERIAL TRACING CLOTH

SUPPLIES & EQUIPMENT CLASSIFICATION			
LET	ALTERATION	DATE	BY
C	TRACED UP TO DATE	3-19-37	V.I.B.
D	REVERSED NOTES; DRILL LARGE FLANGE & PRICK PUNCH SMALL FLANGE	3-19-37	V.I.B.

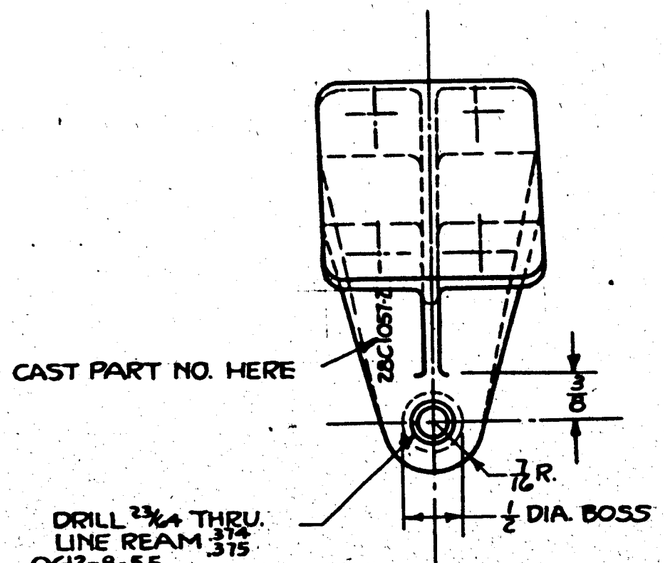

NOTES:

ALL WEBS ARE TO BE 1/8
ALL RADII AND FILLETS
NOT NOTED TO BE 1/8 R.

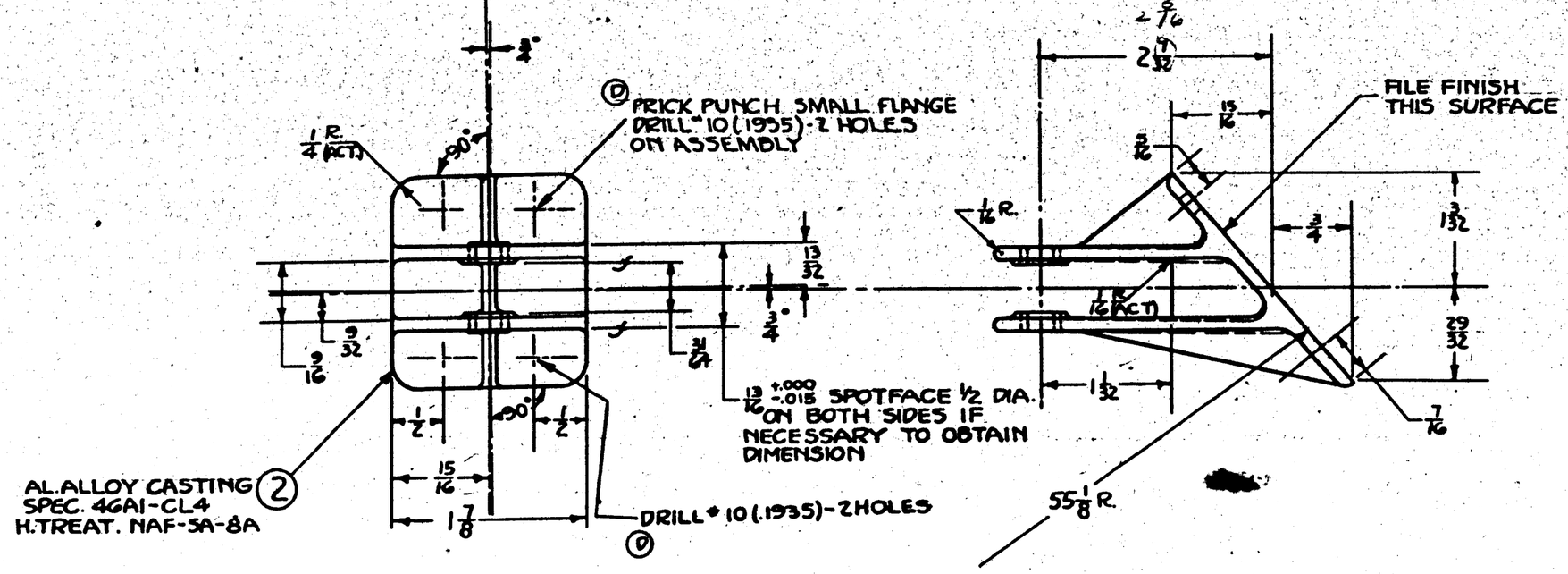

C.P.-CHROM PRIME CODE [redacted]

	PBY-5B	28C1013	1								
	PBY-5A	28C1013	1								
	PBY-4	28C1013									
	PBY-3	28C1013									
	PBY-2	28C1013									
	PBY-1	28C1013									
O.H.	MODEL	NEXT ASSY.	REQ.	ST'D PARTS	LH REQ.	RH REQ.	PART NO.	LH REQ.	RH REQ.		
	REQUIREMENTS PER AIRPLANE			MAT.	PARTS LIST PER ASSY.						

REPLACES	[redacted] 5-11-36 DATE						
REPLACED BY	.17 CALC. WT.	ACT. WT.					
LIGHT ON DIMENSIONS UNLESS OTHERWISE INDICATED ±	SCALE 12" = 1'-0"						
[redacted]	AC						
	NAVY NOTED	NOTED	NOTED	Z-P-2 [redacted] GP	WHER [redacted]	GREEN	
	MATERIAL	SPEC.	HEAT TREAT	FINISH	4-4-36 DRAFT	5-19-37 CHECK	5-8-36 ENGR.
	CONSOLIDATED AIRCRAFT CORP. BUFFALO, N.Y.	NAME PULLEY HOUSING - AILERON CONTROL - BLKHD. #3					
	UNLESS OTHERWISE SPECIFIED						OPP. HAND
							D 28C1013

SUPPLIES & EQUIPMENT CLASSIFICATION			
LET	ALTERATION	DATE	BY
B	TRACED UP TO DATE	3-19-37	V.I.B
C	MACHINED GROOVE ADDED	3-7-38	[redacted]

C.O. 7020

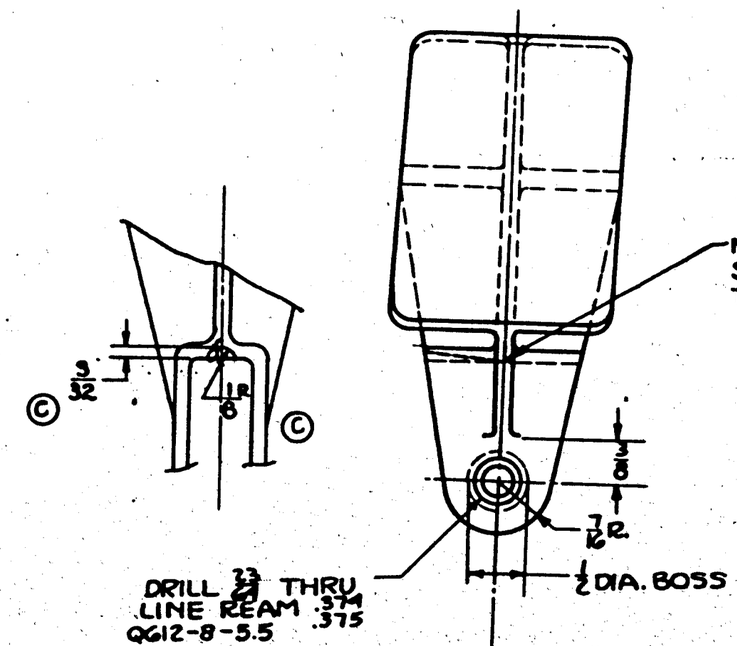

NOTES:-
ALL WEBS TO BE 1/8
ALL FILLETS AND RADII NOT NOTED TO BE 1/8 R.

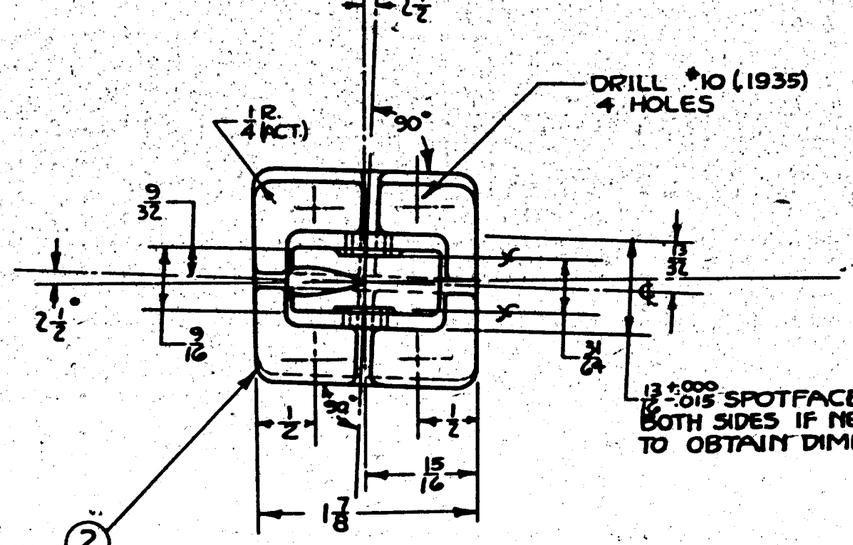

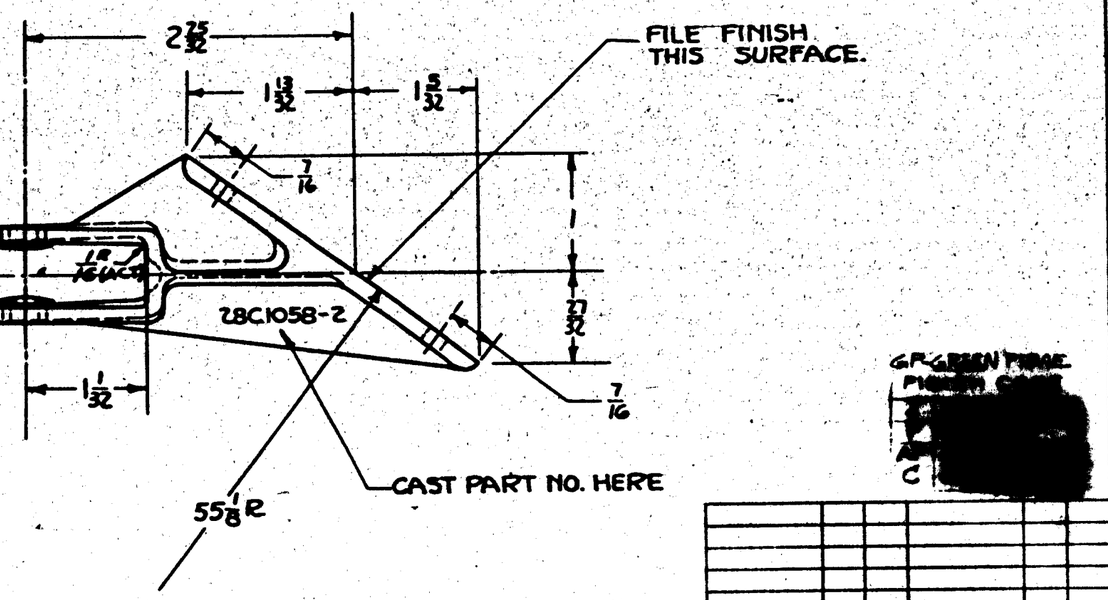

GP GREEN TREE PRESS
[redacted]

LIMITS:- ± 1/32 ON CASTING
± .010 ON MACHINING

	PBY-5A	28C1013	1								
	PBY-5B	28C1013	1								
	PBY-4	28C1013									
	PBY-3	28C1013									
	PBY-2	28C1013								QG12-8-5.5	2
	PBY-1	28C1013								-2	1
O.H.	MODEL	NEXT ASSY.	REQ.	STD PARTS	LH REQ.	RH REQ.	PART NO.	LH REQ.	RH REQ.		

REQUIREMENTS PER AIRPLANE | MAT. | PARTS LIST PER ASSY.

REPLACES	AP [redacted] 5-11-36 DATE					
REPLACED BY	.10 CALC. WT. - ACT. WT.					
LIMIT ON DIMENSIONS UNLESS OTHERWISE SPECIFIED ± NOTED	SCALE 12" = 1'-0"	AC			GP	WIER CN
[redacted]	NAVY NOTED	NOTED	NOTED	Z-P-Z [redacted]	3-17-38 3-21-38	
	[redacted]	SPEC.	HEAT TREAT	FINISH	DRAFT	CHECK EXAM. ENG.

CONSOLIDATED AIRCRAFT CORP. BUFFALO, N. Y.
STAMP PT. No. WHERE SHOWN

NAME: PULLEY HOUSING - UP ELEV. CONTROL - BKHD #3

OPP. HAND

DWG. NO. 28C105

SUPPLIES & EQUIPMENT CLASSIFICATION			
LET	ALTERATION	DATE	BY
H	TRACED TO DATE	5-14-37	[illegible]
J	.3125 +.001 -.001 WAS .3125 +.005 -.010	7-12-37	[illegible]
K	.4370 +.005 -.005 WAS .4375 ON -4 & -9	10-6-37	[illegible]
L	ADDED "SHAFT ENDS" NOTE	3-17-40	[illegible]
M	3.375 +.005 -.005 WAS 3.375 +.010 -.010 REVISED.		
	.3745 +.005 -.010 RELIEF IN -4 & -5	7-12-40	[illegible]
	.3747/.3737 WAS .3747/.3742	"	"
N	.3753 WAS .3747 - .3748 WAS .3370 - .3365	6-2-43	[illegible]
P	.3125 WAS .3127	6-2-43	[illegible]
Q	.1864 WAS .1865 - 3/64R WAS 3/16 DIA.	6-2-43	[illegible]
R	.375 WAS .3745 - .3755	6-2-43	[illegible]
S	CHANGED THREAD NOTES		
	TO READ NC2. NO WT. CHG.	7-19-43	[illegible]
T	FROM PIECE FOR -4, -5, -6, & -9 REMOVED		
	"ST'L. BAR, SPEC. 46S18a, GR. 7E"		
	ADDED TO FACE MAT. NOTE #1	9-13-43	[illegible]
	H.T. "NOTED" WAS "NONE." (NO WT. CHG.)		

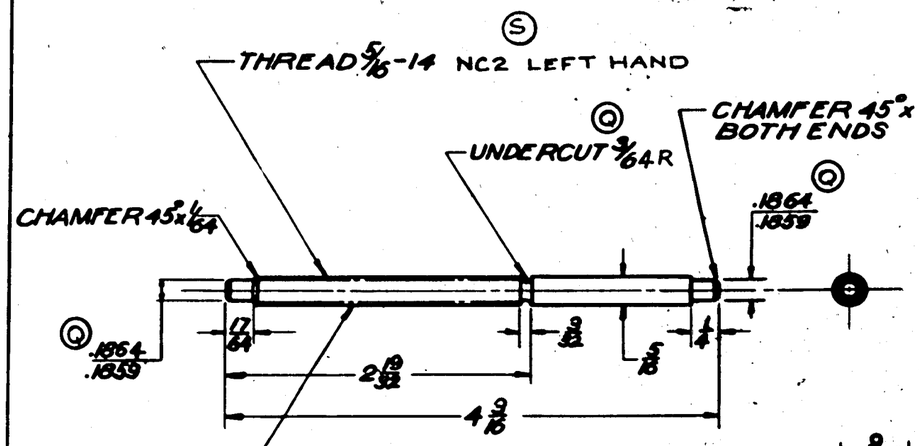

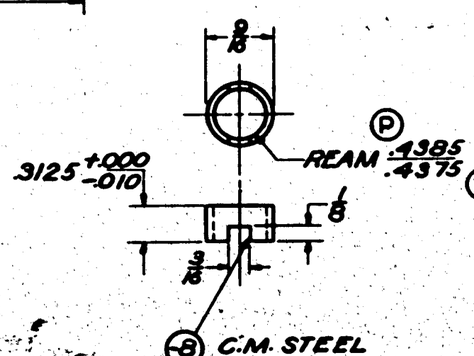

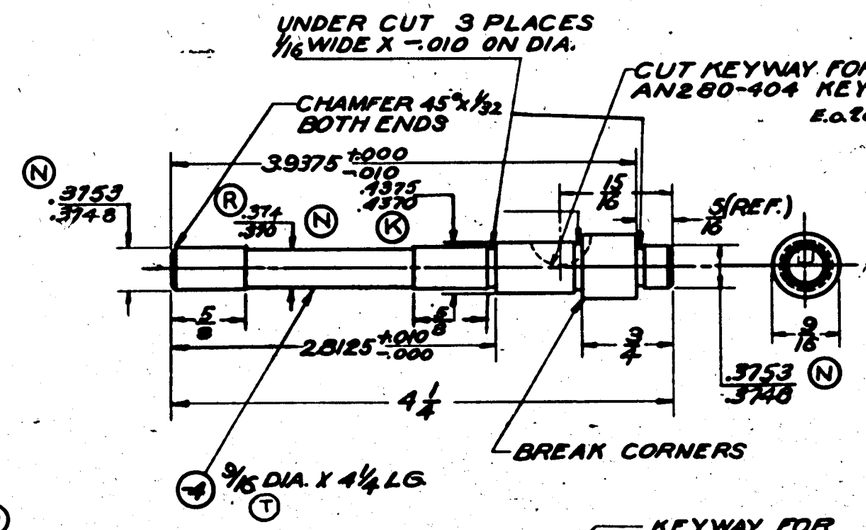

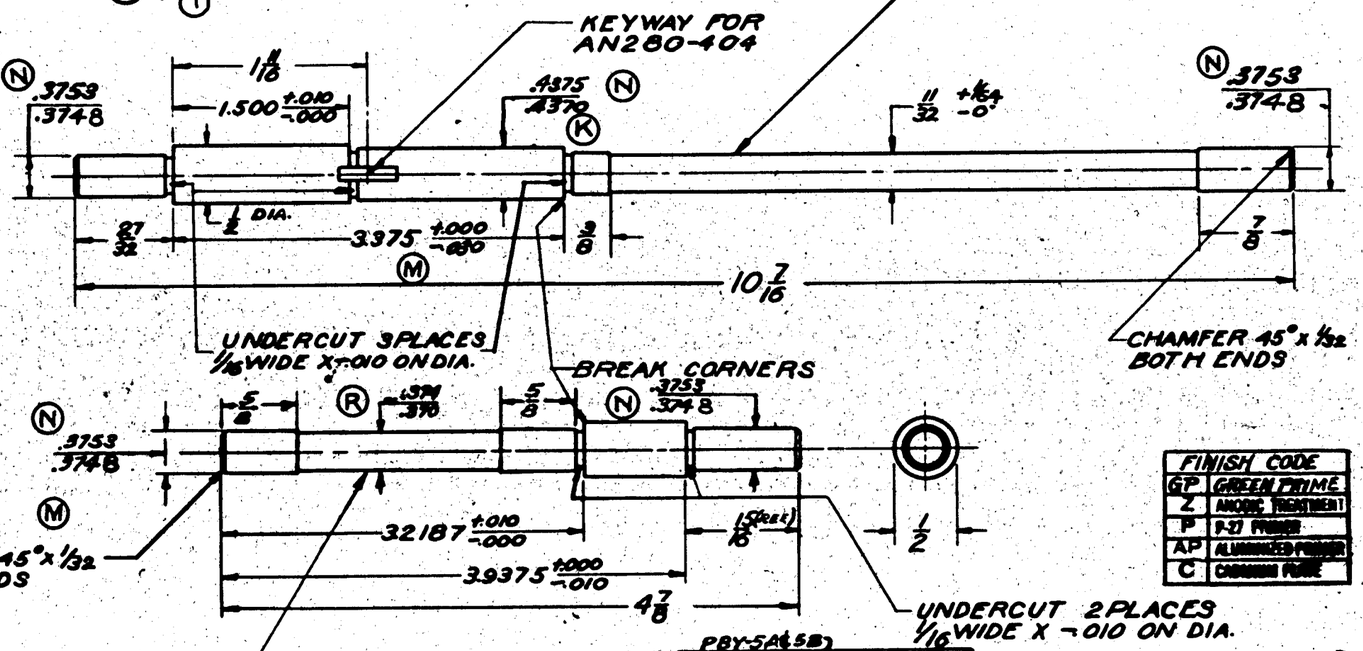

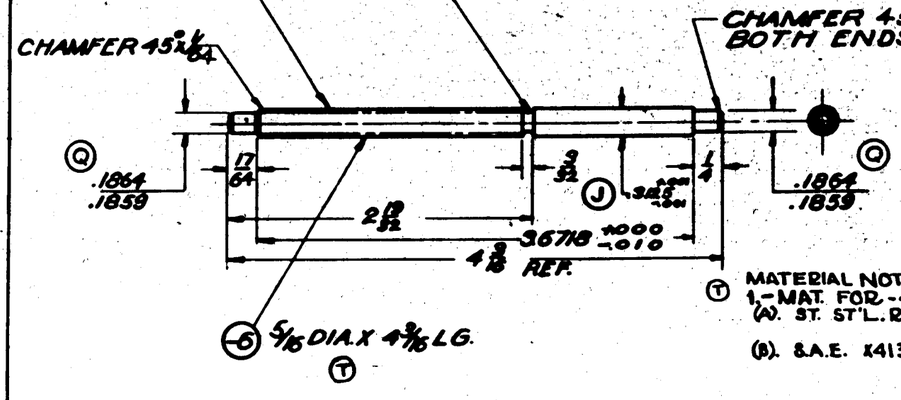

T MATERIAL NOTE:
1,- MAT. FOR -4, -5, -6, & -9 MAY BE -
(A). ST. ST'L. ROD, SPEC. AN-QQ-S-771, COMP. F.M., COND. B, OR
(B). S.A.E. X4130, C.M. ST'L. ROD, SPEC. AN-QQ-S-684, T.S. 120,000 - 145,000 #/sq

FINISH - CAD. PLATE - PER SPEC. AN-QQ-P-421.

FINISH CODE	
GP	GREEN PRIME
Z	ANODIC TREATMENT
P	P-27 PRIMER
AP	ALUMINIZED PRIMER
C	CADMIUM PLATE

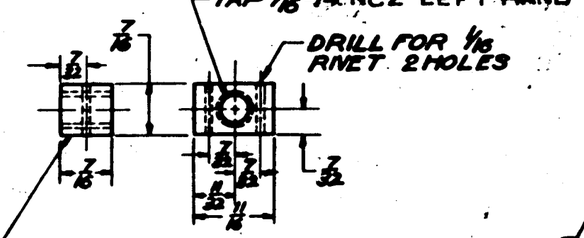

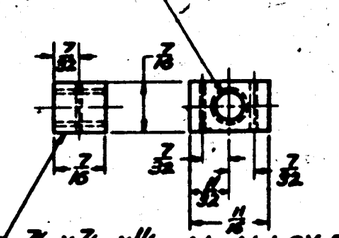

NOTE:
CENTER HOLES PERMISSIBLE IN SHAFT ENDS. L

NOTE: FINISH -3 & -7 Z-P-20T

PBY-5A(5B)		
	PBY-5	SEE RELEASE
	PBY-4	SEE RELEASE
	PBY-3	SEE RELEASE
	PBY-2	SEE RELEASE
-9	PBY-1	28C1070
-8	PBY-1	28C1070
-7	PBY-1	28C1070
-6	PBY-1	28C1070
-5	PBY-1	28C1070
-4	PBY-1	28C1070
-9	XP3Y-1	28C1070
-8	XP3Y-1	28C1070
-7	XP3Y-1	28C1070
-6	XP3Y-1	28C1070
-5	XP3Y-1	28C1070
-4	XP3Y-1	28C1070
-3	XP3Y-1	28C1070
-2	XP3Y-1	28C1070

PT. NO.	CALC. WT.	ACT. WT.
-9	.35	
-8	.009	
-7	.01	
-6	.08	
-5	.17	
-4	.16	
-3	.01	
-2	.08	

REPLACES

REPLACED BY

LIMIT OR DIMENSIONS UNLESS OTHERWISE SPECIFIED ± .010

APPROVED LCO 1-8-36 DATE

CALC. WT. NOTED ACT. WT.

SCALE 12" = 1'-0"

AC

NAVY NOTED

MATERIAL NOTED

SPEC. NOTED

HEAT TREAT NOTED

FINISH C & NOTED

O.H.	MODEL	NEXT ASSY.	REQ.	STD PARTS	LH REQ.	RH REQ.	PART NO.	LH REQ.	RH REQ.
REQUIREMENTS PER AIRPLANE				MAT.	PARTS LIST PER ASSY.				

	DRAFT	CHECK	EXAM.	ENG.
[illegible]	12-8-36	[illegible]	3-24-37	
[illegible]	Wiley 3-11-37	Green		

CONSOLIDATED AIRCRAFT CORP. BUFFALO, N.Y.

STAMP PT. No. WHERE SHOWN

NAME MECHANISM DETAILS - FLAP CONTROL - GEAR BOX

OPP. HAND

DWG. SIZE D

28C1068

R 8901382

SUPPLIES & EQUIPMENT CLASSIFICATION			
LET	ALTERATION	DATE	BY
B	TRACED UP TO DATE	3-13-3	V.I.B.
C	MATERIAL 356-T6 WAS 195T6 HEAT TREAT 30000 WAS 29000 PER AN-QQ-A-596 WAS 66 A1-C1-B WT CHG NEG.	7-31-42	[illegible]
D	ADDED: 1/8 R & REMOVED: 5/16 DIA. WT CHG NEG.		

E.O. A45141

E.O. A98943

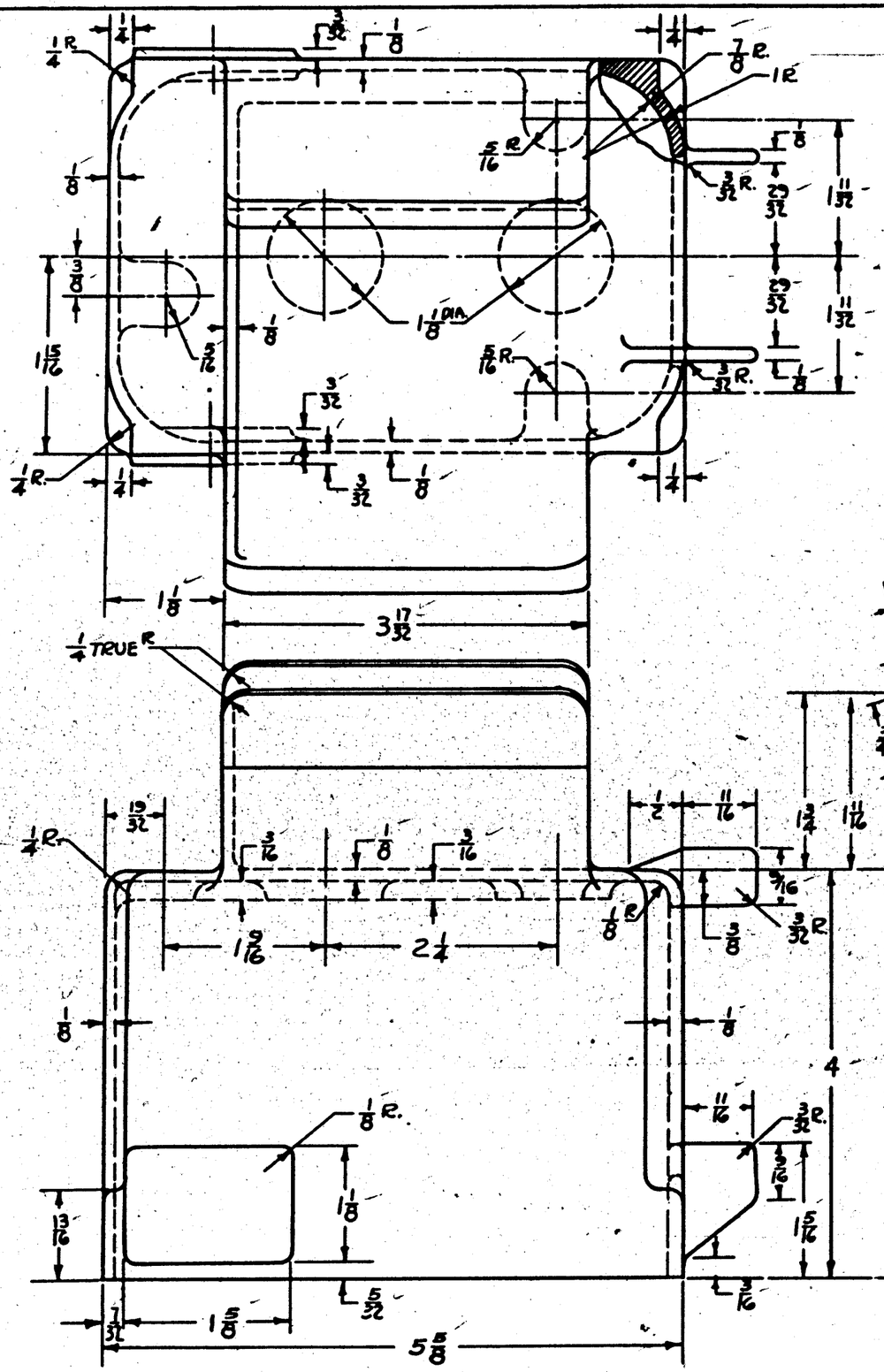

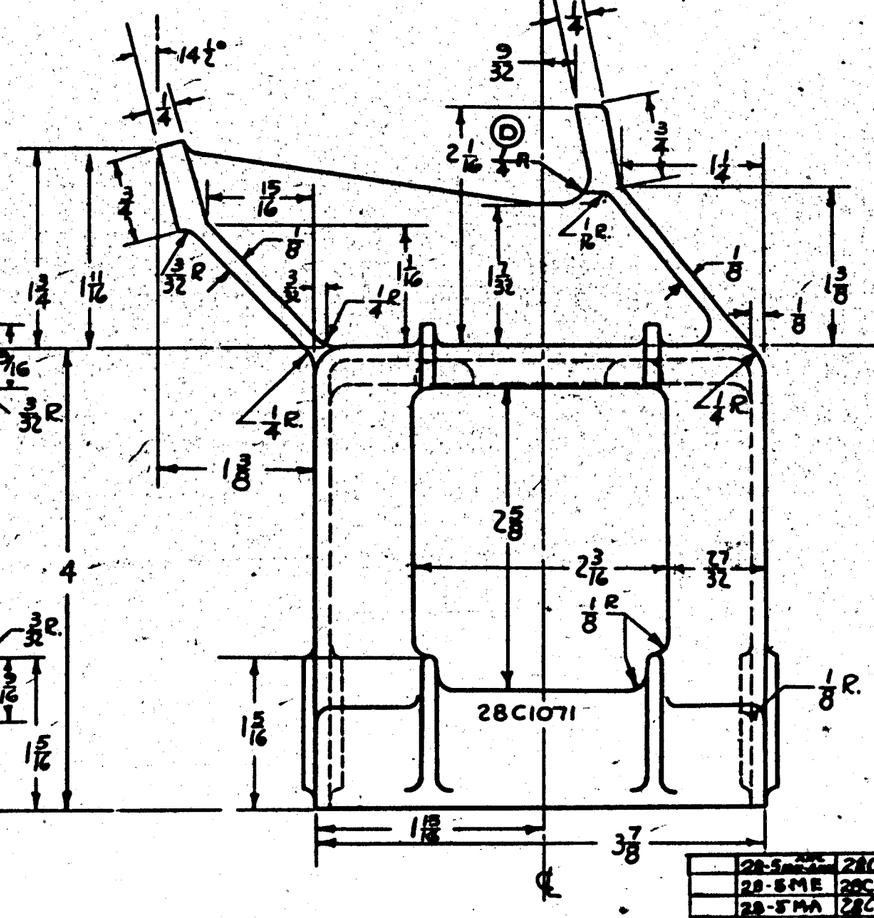

NOTE:- ALL SMALL UNMARKED RADII ARE 1/8 R.

	28-5 [illegible]	28C1072	1 [illegible]						
	28-5ME	28C1072	1						
	28-5MA	28C1072	1						
	28-5MC	28C1072	1						
	PBY-5A	28C1072	1						
	PBY-5A	28C1072	1						
	XPBY-5	28C1072	1						

O.H.	MODEL	NEXT ASSY.	REQ.	ST'D PARTS	LH REQ.	RH REQ.	PART NO.	LH REQ.	RH REQ.
REQUIREMENTS PER AIRPLANE				MAT.	PARTS LIST PER ASSY.				

REPLACES	APPR. [redacted] DATE 1-8-36								
REPLACED BY	CALC. WT. 1.6	ACT. WT.							
LIMIT ON DIMENSIONS UNLESS OTHERWISE SPECIFIED ± 1/32	SCALE 12" = 1'-0"								
[redacted]	AC								
	NAVY CASTING ALCOA 355-T6	AN-QQ-A-596	30000 #/□"	NONE					
	MATERIAL	SPEC.	HEAT TREAT	FINISH					

	WEIR	[illegible]	[illegible]
	12-11-35	2-18-36	2-3-36
	DRAFT	CHECK	ENGR.

CONSOLIDATED AIRCRAFT CORP. BUFFALO, N. Y.

STAMP PT. No. WHERE SHOWN

NAME: BOX-CASTING-FLAP CONTROL-GEAR

OPP. HAND

D 28C1071

SUPPLIES & EQUIPMENT CLASSIFICATION			
LET.	ALTERATION	DATE	BY
C	TRACED	9-19-41	[redacted]
D	ADDED DRILL NOTES & PBY-4 & 5 DIM.	1-21-42	[redacted]
E	REMOVED 10° & 5° FROM 37° ANGLE ADDED 3.687±.010	1-29-43	[redacted]
F	REPLACED 3" DIA. CBM WITH 3 1/16"-12 AND ADDED 1 1/2" ACCESS HOLE AND PBY-5/1545 WAS 8745/8755	7-13-43	[redacted]
G	1/16" WAS 1/8" NO WT. CHG. E.A. NO. 105300	2-9-45	[redacted]

1.344 +.003

9/16

.375 +.003

9/16

1.344 +.003

1 15/16

JIG DRILL 55 DRILL AND REAM .8745 .8755 TO MATCH 28C1073 PRESS IN -2 BEARING STAKE IN PLACE

C DRILL 1/8 (.125) 4 HOLES

THIS SURFACE 1/8 & 1/2 TO BE SMOOTH. FILE IF NECESSARY.

DRILL #10 (.1935) 4 HOLES

2 13/32

1/2

NOTE:- THESE SLOTS THRU BOTH SIDES

1.562 +.003

1.125 +.003

1/4 (REF.)

9/32

17/32

5/16

1/4

2 3/16

2 3/16

3

3.687 +.010 -.000

E

2 3/16

13/32

5/16

5/16

21/32

1 13/32

D DRILL & TAP THRU FOR #6-32 SCR. 8 PLACES

9/16

9/16

1 1/2

DRILL 55 64 LINE REAM .8755 .8745 F

DRILL #28 (.1405) 4 HOLES D

DRILL #29 (.136) 5/8 DEEP TAP #8-32 NC-2 1/2 DEEP JIG DRILL TO MATCH 28C1073 4 PLACES.

NOTE:- FINISH Z.P. BEFORE PRESSING IN BEARINGS AND BUSHINGS

F

14 1/2°

10°

5/16

3 1/2 +1/32 -.000

3/16

3/16

5/16

1.49 REF. 64

2 5/8 REF. 64

-2 FAFNIR. KC-6 BALL BEARING

JIG DRILL 12 64 AND REAM .3125 .3115 TO MATCH 28C1073 PRESS IN QC 10-6-8 BUSHING 3 PLACES

EN-ENAMEL [redacted]

2 1/2

5/16

1 1/2 DIA. 2 1/16 ACCESS HOLE F

3 15/16

3 15/16 +.010 -.000

1/2

						PBY-5&5A	28C1070	1 EA					
						PBY-4	28C1070						
						PBY-3	28C1070						
						PBY-2	28C1070						
						PBY-1	28C1070						
						XPBY-1	28C1070						
												28C1071	1
												QC10-6-8	3
												28C1072-2	2
28B5AMN	28C1070	1											
PBY-5B	28C1070	1											

LH REQ.	RH REQ.	PART NO.	LH REQ.	RH REQ.

REPLACES

REPLACED BY

LIMIT ON DIMENSIONS UNLESS OTHERWISE SPECIFIED ±.010 UNLESS NOTED

APPR. [redacted] DATE 9-35

A&C CALC WT. ACT. WT.

SCALE 12" = 1'-0"

A.C.

NAVY NOTED

MATERIAL

CONSOLIDATED AIRCRAFT CORP. BUFFALO, N.Y.

STAMP PT. No. WHERE SHOWN

O.H.	MODEL	NEXT ASSY.	REQ.	STD PARTS
REQUIREMENTS PER AIRPLANE				
NOTED	NONE			
NOTED		NONE		
SPEC.		HEAT TREAT		FINISH

MAT. SEE NOTE

PARTS LIST PER ASSY.

2 BALL BLACK ENAM.

LABOR	MATERIAL
10-15-36	9-6-37

DRAFT	CHECK	ENGR.	ENGR.
3-2-36			

NAME BOX - FLAP CONTROL - GEAR

OPP. HAND

D 28C1072

LET	ALTERATION	DATE	BY
G	PHOTO-TRACED	4-14-38	LINN
H	CORRECTED MATERIAL SPEC. & REQ. PER AIRPLANE COLUMN	4-14-38	LINN
J	ADDED VIEW FOR 28-SMN, 28-SMN. NO WEIGHT CHANGE	4-19-38	LINN

DIVIDE INTO FIFTEEN EQUAL SPACES FOR ELEVATOR CONTROL. THE INDICATOR LINES AT 5 SPACE INTERVALS TO BE HEAVIER THAN THE INTERMEDIATE LINES AS SHOWN.

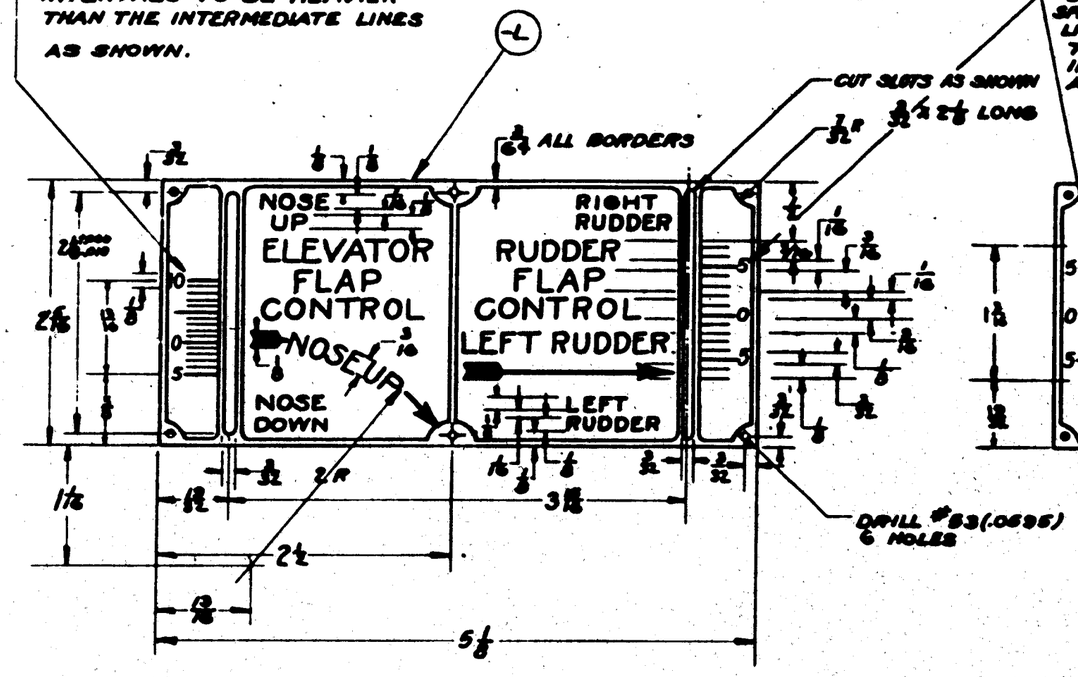

DIVIDE INTO 14 EQUAL SPACES. THE INDICATOR LINES AT 5 SPACE INTERVALS TO BE HEAVIER THAN INTERMEDIATE LINES AS SHOWN.

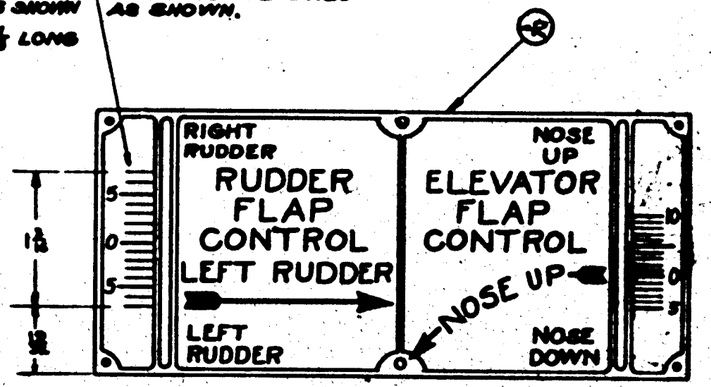

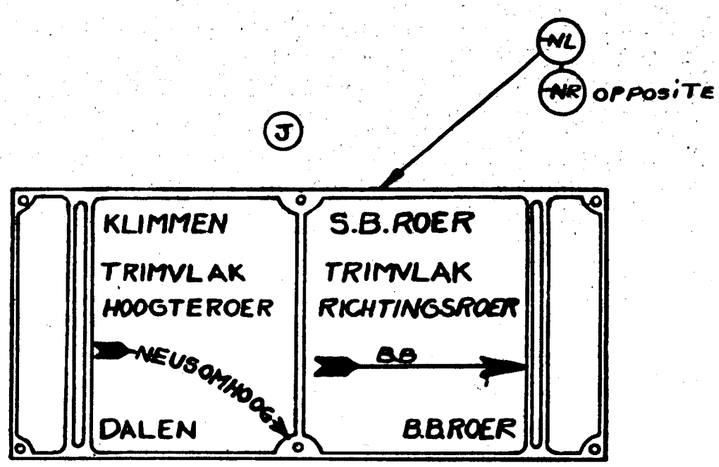

FINISH:
- BACKGROUND TO BE ETCHED AND PAINTED BLACK. RAISED LETTERS, BORDER & GRADUATIONS ARE TO BE POLISHED.

H

QR	PBY-5B	28C1077	1
QL	PBY-5B		1
NR	28-SMN		1
NL	28-SMN		1
QR	28-SMC		1
QL	28-SMC		1
NR	28-SMN		1
NL	28-SMN		1
QR	28-SMC		1
QL	28-SMC		1
QR	28-SMC		1
QL	28-SMC		1
QR	28-SMA		1
QL	28-SMA		1
QR	QA-10		1
QL	QA-10		1
QR	PBY-5A		1
QL	PBY-5A		1
QR	PBY-5		1
QL	PBY-5	28C1077	1
4 ASSY. EACH SHIP	MODEL	NEXT ASSY.	REQ.

REQUIREMENTS PER AIRPLANE

REPLACED 28C1077 "B" SIZE — 035 ORIG. WT.

REPLACED BY — ADV. WT.

UNLESS OTHERWISE SPECIFIED ± 1/64 — SCALE 12"=1'-0"

STAMP PART NUMBER WHERE SHOWN

PART No.	STOCK	MATERIAL	SPEC.	LH REQ.	RH REQ.	LH REQ.	RH REQ.	LH REQ.	RH REQ.	LH REQ.	RH REQ.	LH REQ.	RH REQ.
PARTS LIST PER ASSY.				-0	-N								

A C		WEIR	STHR	GREEN			
NAVY NONE	NOTED	1-9-36	1-17-36	2-2-36			R
HEAT TREAT	FINISH	DRAFT	CHECK	STRUCT	MAT	APPROV	ENG.

NAME PLATE - ELEVATOR & RUDDER FLAP CONTROL GEAR BOX-NAME

OPP. HAND 28C1077-R

CONSOLIDATED AIRCRAFT CORP. SAN DIEGO, CALIF.

SIZE D — 28C1077

28C1077

SUPPLIES & EQUIPMENT CLASSIFICATION			
LET.	ALTERATION	DATE	BY
A	TRACED	9-18-37	[redacted]
B	TAPPED HOLES ADDED	11-2-37	Wem
C	1½ WAS 1⅞; WAS 2 TAPPED	1-18-38	Wem
"	HOLES NOW 1	" "	" "
D	REMOVED FROM FACE OF DWG.		
	"AL ALLOY CASTING, SPEC M-186,		
	42,000 #/sq. in." ADDED NOTE		
	#2. NO WT. CHG.	9-27-43	LARSEN

C.O. 5956

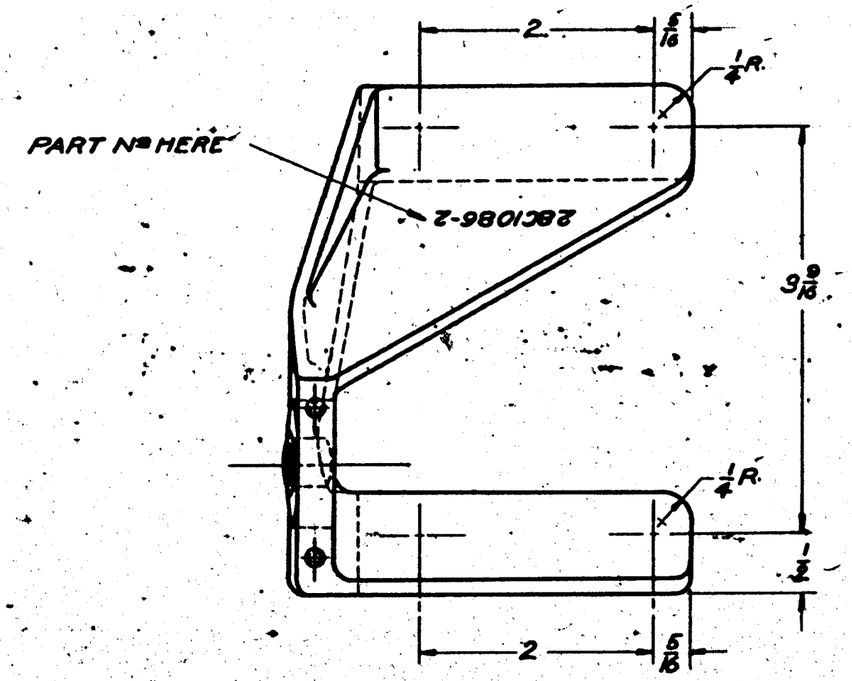

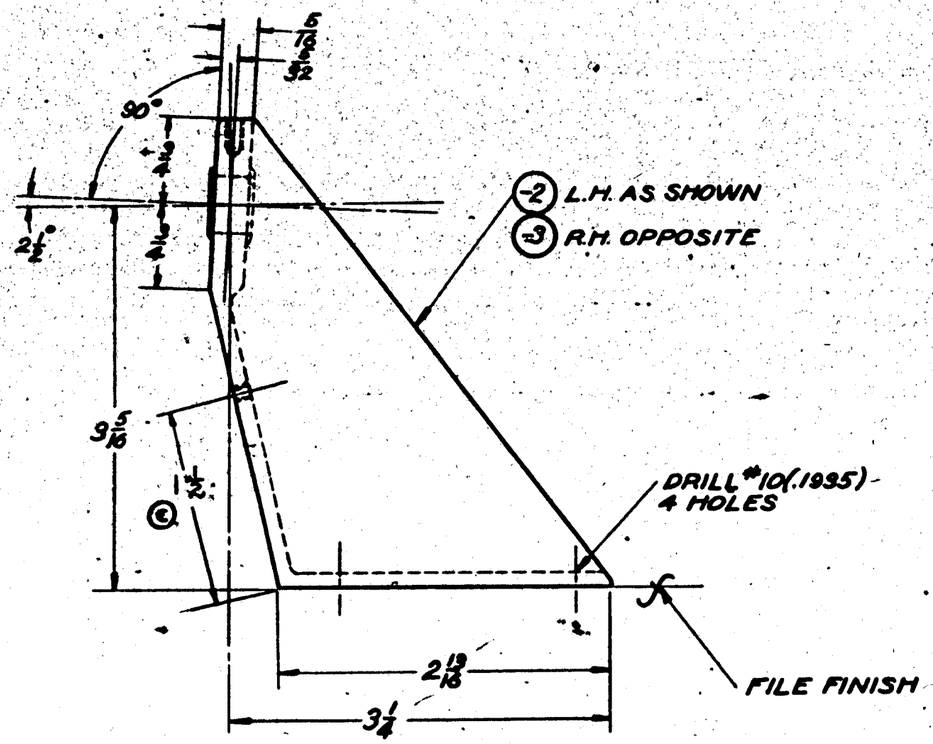

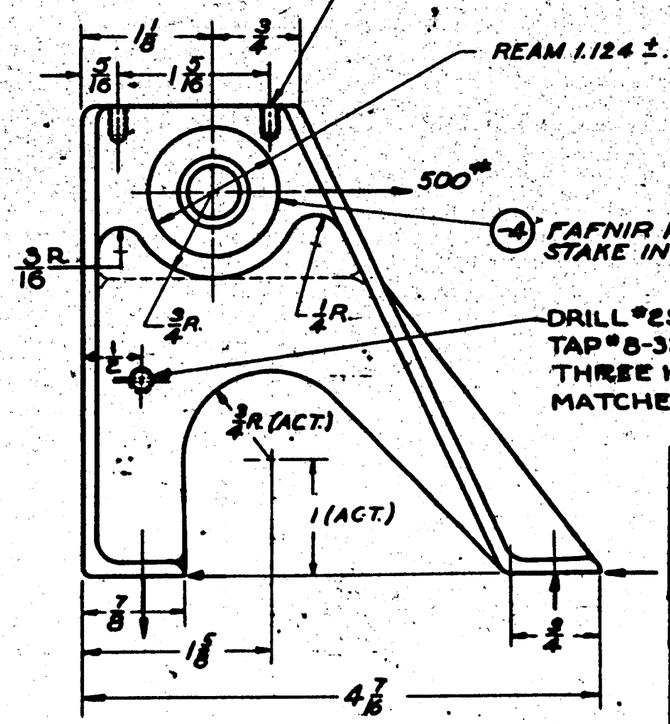

NOTES:-

1- ALL FILLETS AND RADII NOT NOTED TO BE 1/8 R.
ALL WEBS TO BE 1/8

D 2- MATERIAL FOR -2 & -3 MAY BE:
(A) AL ALLOY CASTING, 220T4, SPEC AN-QQ-A-382, T.S. 42,000 P.S.I. OR
(B) AL ALLOY CASTING, 195T6, SPEC AN-QQ-A-390, CL II, T.S. 52,000 P.S.I.

-R	28S-SHIM-AR	28T2029	1 EA										
-L	28S-SHIM-AR	28T2029	1 EA										
-R	28S-SHIM-AR	28T2029	1 EA										
-L	28S-SHIM-AR	28T2029	1 EA										
-R	PBY-5	28T2029	1										
-L	PBY-6	28T2029	1										
R	PBY-SHIM	28T2029	1 EA										
L	PBY-SHIM	28T2029	1 EA										
-1	PBY-4	28T2029											
	PBY-4	28T2029											
-1	PBY-3	28T2029											
	PBY-3	28T2029											
-1	PBY-2	28T2029											
	PBY-2	28T2029											
-1	PBY-1	28T1009										-4	1
	PBY-1	28T1009										-3	1
												-2	1
												LH REQ.	RH REQ.

REPLACES

REPLACED BY

LIMIT ON DIMENSIONS UNLESS OTHERWISE SPECIFIED ± −

APP. [redacted] 9-36 DATE

CALC. WT. ACT. WT.

SCALE 12" = 1'-0"

O.H.	MODEL	NEXT ASSY.	REQ.	ST'D PARTS	MAT.	PART NO.
REQUIREMENTS PER AIRPLANE					PARTS LIST PER ASSY.	
AC		"		-2 & -3	9-6-36	9-9-36
NAVY NOTED	NOTED	NOTED		Z-P-26P	Wier 9-21-37	C.N.
MATERIAL	SPEC.	HEAT TREAT		FINISH	DRAFT	CHECK

CONSOLIDATED AIRCRAFT CORP. BUFFALO, N. Y.

STAMP PT. No. WHERE SHOWN

NAME BRACKET - SPROCKET SUPPORT - STAB-ELEV. FLAP

OPP. HAND 28C1088-1

SIZE D DWG. 28C1088

[redacted] CODE

[redacted]

SUPPLIES & EQUIPMENT CLASSIFICATION			
LET	ALTERATION	DATE	BY
C	TRACED UP TO DATE	3-15-37	V.I.B
D	1¼ WAS 1⅝ – 1½ WAS 1 – ⅞ RE WAS		
	5/32 – 1/4 WAS 1/8	9-7-37	
E	CHANGE AFTER ASSY TO INSTALL		
F	MACHINED GAUGE WEB THICKNESS		
	TO 3/16 FROM 1/8		
G	ADDED RIVET SPACING		
H	REMOVED RIVET & ADDED	4-6-41	
	NEW SPACING DIM'S.		
J	DIM. 1 1/32 WAS 7/8	1-27-42	
K	DIM. 1⅛ WAS 1¼, 1¼ OPENING WAS		
	1⅛ REMOVED FROM D'W'G 3/16		
	DIM. & 1/16 DIM. ADDED 1/64 & 5/64		
	DIMS. & 1/8 R. WT. CNG NEG.	6/20/42	

E.O. 30826 A
E.O. 30926 B
E.O. A46722
PBY-5 E.O. 30826 C

UPPER FLANGE

LOWER FLANGE

1/8 R.

2 3/16 — 2 3/16 — 3 3/8 — 1 11/16 — 1/8 — 11/16

7/8 DIA.

DRILL 23/64 DIA THRU
REAM .374 – .375 THRU
9612-8-8 SPACER

1/8 SPOTFACE ON THIS SIDE

2 3/16 R.

1 5/8 DIA. HOLE

1 1/8 OPENING

1 1/8 R.

5 9/16

28C1107-2

NUMBER HERE

SYMMETRICAL ABOUT ℄

NOTE:
SPOTFACE IF NECESSARY TO HOLD LUG THICKNESS DIM.

3 5/16

1 3/32

1 5/64 +.010 −.000

1 3/64 (K)

5/8

1/4

1/16

1/2

FILE FIN.

(-2) ALUM. ALLOY CASTING
SPEC. M-186-H.TREAT. 42000 #/□"
FINISH: 2-P-2AMM-CP
AFTER MACH:

5/8 SPOTFACE ON THIS SIDE.

7/8

11/16

2 5/16

6 5/8

1 DIA HOLE

3/4 R.

3/4 R. (MIN.)

7/32 (D)

1 DIA HOLE

3 EQUAL SPACES

3

2

2 3/4

3 1/4

2 1/16

1/8

1R.

2

1 3/16

3/16

3/8

NOTE: FILLET RADII TO BE 1/8

-0	PBY-5A	28C1019	1	
-0	PBY-5	28C1019	1	
-0	PBY-5	[illegible]	1	
	PBY-4	[illegible]		
	PBY-3	28C1019		
	PBY-2	28C1019		
	PBY-1	28C1019		

28C1107-2

O.H.	MODEL	NEXT ASSY.	REQ.	ST'D PARTS	LH RH REQ.	PART NO.	LH RH REQ.

REPLACES
REPLACED BY
LIMIT OR DIMENSIONS UNLESS OTHERWISE SPECIFIED ± 1/32

APP. [redacted] 13-36 DATE
97 CALC WT. ACT. WT.
SCALE 12" = 1'-0"

REQUIREMENTS PER AIRPLANE | MAT. | PARTS LIST REF ASSY.

MATERIAL	SPEC.	HEAT TREAT	FINISH
NOTED	NOTED	NOTED	NOTED

DRAFT | CHECK | ENGR.

CONSOLIDATED AIRCRAFT CORP. BUFFALO, N.Y.

NAME
BRACKET-CENTER SECTION REAR SPAR AILERON PULLEY

DWG. NO. D 28C1[illegible]

SUPPLIES & EQUIPMENT CLASSIFICATION			
LET	ALTERATION	DATE	BY
C	TRACED UP TO DATE	9-15-XVI	
D	CREATED - TO AGREE WITH [illegible]	12-43	EMS
E	REARRANGED NOTE FOR -34-4 [illegible]		
	"[illegible] X .060 EXT. ANGLE [illegible]		
	3 REQ. CLEARANCED NUTS.		
	NOTE FOR -34-4, [illegible]		
		[illegible] Root	

STRINGER #3 (REF)

AN 442-D4 (2 PLCS)

(2) REF.

DETAIL-A
FOR -10 ASSY ONLY

℄ SHIP

AN 442-D4
5 PLACES

3 1/16

28C1080

16°

DECK LINE

STRINGER # 3.

AN 442-D4.
5 PLACES

5/8

5/8

5/16

15°

5/16

1/2

3/8

AN 520-10-7
AB 365-1032
4 PLACES

1 7/16

60 3/8 R.

A

(-3)

(-4)

(-2) 2 1/8 x 3/16 x .060 x 8 1/2 BULB ANGLE
ALCOA DIE # K-1559
SPEC: 4GA9 COND "T"
FINISH: Z-P-2AGV. GP

VIEW ON PORT SIDE LOOKING AFT.

TRIM - 2 TO THIS DIMEN.

AN 23-17
AN 1960-10
AN 320-3
AN 380-82-2
2 PLACES

AN 210-1A

1/2

℄ STA # 525

3 3/8

FORWARD

FINISH CODE	
Z	ANODIC TREATMENT
P	P-27 PRIMER
AP	ALUMINIZED PRIMER
C	CADMIUM PLATE

GP - GREEN PRIME

PILOT DRILL
1/16 4 HOLES

1/16

1/4

3/16

1/2

1 5/16

3/16

5/16

3/16

3/16

SHOWN (-3)

OPPOSITE (-4)

MATERIAL NOTE:
1. MATERIAL FOR -34-4 MAY BE:
A. Y-2-A11T X 1 3/4, OR
B. K6240 X 1 3/4, [illegible] AL. AL:
[illegible] SPEC 4GA9-T.
FINISH Z-P-2GP.

(E)

-10	PBY-5B	28C5500	1								
	28-5M1	28C5500	1								
	28-5ME	28C5500	1								
	28-5MC	28C5500	1	AD365-1032	4	4					
	28-5MA	28C5500	1	AN442-D4							
	PBY-5	28C5086	1	AN520-10-7	4	4					
	PBY-5	28C5000	1	AN210-1A	4	4					
	PBY-4	28C2000		AN380-B2-2	2	2	28C1080	2	2		
	PBY-3	28C3000		AN320-5	2	2	-4	1			
	PBY-2	28C3000		AN960-10	2	2	-3	1	1		
	PBY-1	28C1000		AN23-17	2	2	-2	1	1		
					G.M.	MODEL	NEXT ASSY.	REQ.	STD PARTS	REQ.	PART NO.

C.10470
C.10496

REPLACES [redacted]
REPLACED BY
LIMIT ON DIMENSIONS UNLESS OTHERWISE SPECIFIED + −
[redacted]

[redacted] DATE [redacted]
26 CALC. WT. ACT. WT.
SCALE 12"-1'-0"
AC
NAVY NOTED
MATERIAL

REQUIREMENTS PER AIRPLANE: NOTED | NONE | NOTED
MAT. | SPEC. | HEAT TREAT | FINISH

PARTS LIST PER ASSY.
WIER 4-1-36 3-11-36 3-24-36
DRAFT | CHECK | ENGR. | SUP.

CONSOLIDATED AIRCRAFT CORP. BUFFALO, N.Y.
GROUP PT. No. WHERE SHOWN

NAME: INSTALLN - FLAP CONT. PULLEY BRKT. - STA. # 525

SUP. NUMBER: 28C1111

SULLIVAN-HOFFMANN CO., INC. BUFFALO
IMPERIAL TRACING CLOTH

PART NO	LOCATION	A	B	L	CALC. WEIGHT	ACTUAL WEIGHT
-2	OUTBOARD	94 1/16			.85	
-3	INBOARD	50 1/16			.85	
-12	OUTBOARD		501 1/16			
-14	INBOARD		515 5/16			
-16	INBOARD		494 3/8			
-18	OUTBOARD		504 1/8			
-19	INBOARD			597 5/8		

PART NO	LOCATION	A	B	L	CALC. WEIGHT	ACTUAL WEIGHT
-15	OUTBOARD			604 1/4		
-17	INBOARD			590 5/16		
-19	OUTBOARD			596 13/16		
-20	INBOARD			*		
-21	OUTBOARD			*		
-26	INBOARD		507			
-27	OUTBOARD		491 1/2			

LET	ALTERATION	DATE	BY
V	TRACER. NO WT. CHG.	6-6-42	MCELEY

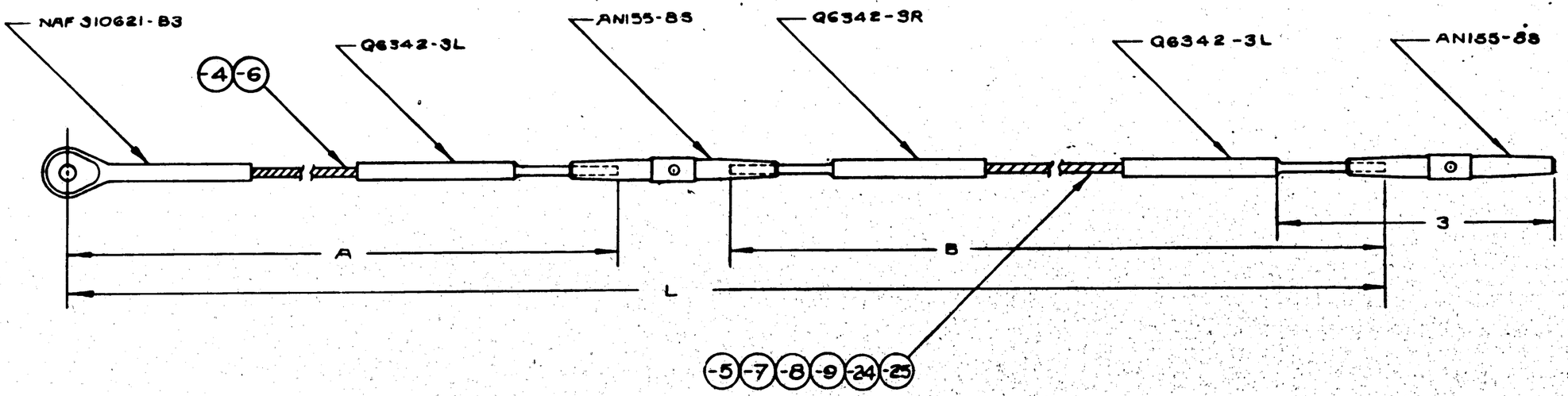

NOTES:
1. PRE-STRETCH CABLE ASSY. TO 442# WHICH IS 60% OF RATED STRENGTH.
2. CABLE TO BE COATED WITH PARALKATONE SPEC. RMGI TYPE B AS PER SPEC. 3R15C.
3. SWAGE IN ACCORDANCE WITH SPEC. T-46.
*. DETERMINE LENGTHS ON FIRST INSTALLATION & NOTIFY ENGINEERING.

C# 70496 C# 77713	-20	28-5-AMC	28C5750	1
	-21	PBY-5A	28C5700	1
	-20	PBY-5A	28C5700	1
C# 70496	-15	PBY-5	28C5000	1
	-13	PBY-5	28C5000	1
	-19	XPBY-5	28C4025	
	-17	XPBY-5	28C4025	
	-15	PBY-4	28C2000	
	-13	PBY-4	28C2000	1
	-18	PBY-3	28C2000	
	-16	PBY-3	28C2000	
	-15	PBY-2	28C2000	
	-13	PBY-2	28C2000	
	-15	PBY-1	28C1000	
	-13	PBY-1	28C1000	
ASSY. DASH NO.	MODEL	NEXT ASSY.	REQ.	

REQUIREMENTS PER AIRPLANE

C# 88476	-21	PBY-5A	28C5564	1
	-20	PBY-5A	28C5564	1
C# 91876	-15	PBY-5	28C5086	1
	-13	PBY-5	28C5082	1
	-15	PBY-5A	28C5500	1
	-13	PBY-5A	28C5500	1
	-21	28-5AMN	28C5750	
	-20	28-5AMN	28C5750	
	-15	28-5MB	28C5500	
	-13	28-5MB	28C5500	
	-15	28-5MN	28C5500	
	-13	28-5MN	28C5500	
	-15	28-5MC	28C5500	
	-13	28-5MC	28C5500	
	-15	28-5MA	28C5500	
	-13	28-5MA	28C5500	
	-21	28-5-AMC	28C5750	
ASSY. DASH NO.	MODEL	NEXT ASSY.	REQ.	

REQUIREMENTS PER AIRPLANE

NAF 310621-B3					1	1											
Q6342-3R							1	1	1	1	1	1	1				
Q6342-3L					1	1	1	1	1	1	1	1					
-25	3/32 DIA.	STEEL CABLE	AN-RR-C-43														
-24	3/32 DIA.	STEEL CABLE	AN-RR-C-43										1				
-9	3/32 DIA.	STEEL CABLE	AN-RR-C-43								1						
-8	3/32 DIA.	STEEL CABLE	AN-RR-C-43						1								
-7	3/32 DIA.	STEEL CABLE	AN-RR-C-43					1									
-6	3/32 DIA.	STEEL CABLE	AN-RR-C-43		1					1							
-5	3/32 DIA.	STEEL CABLE	AN-RR-C-43			1											
-4	3/32 DIA.	STEEL CABLE	AN-RR-C-43	1													
	SUB ASSYS.			-2	-3	-12	-14	-16	-18	-26	-27						
AN155-85				2	2	2	2	2	2								
SUB ASSYS.	-27								1								
	-26							1									
	-18						1										
	-16					1											
	-14				1												
	-12			1													
	-3				1		1		1								
	-2			1		1		1									
PART No.	STOCK	MATERIAL	SPEC.	REQ. -13	REQ. -15	REQ. -17	REQ. -19	REQ. -20	REQ. -21								

PARTS LIST PER ASSY.

AC		M^c DOUGAL	ANDERSON	CARLSON		L.C.W. RING
NAVY NONE	NOTED	10-17-39				9-18-37
HEAT TREAT	FINISH	DRAFT	CHECK	STRUCT	MAT	APPROV ENG.

NAME ASSY. ELEV. FLAP CONTROL-AFT CABLE

OPP. HAND

SIZE D 28C1124

CONSOLIDATED VULTEE AIRCRAFT CORP. SAN DIEGO DIVISION . . SAN DIEGO, CALIF.

R 28C1124

SUPPLIES & EQUIPMENT CLASSIFICATION			
LET	ALTERATION	DATE	BY
B	TRACED AND TO CONF.		
C	17 1/16 DIM. WAS 17 1/8		

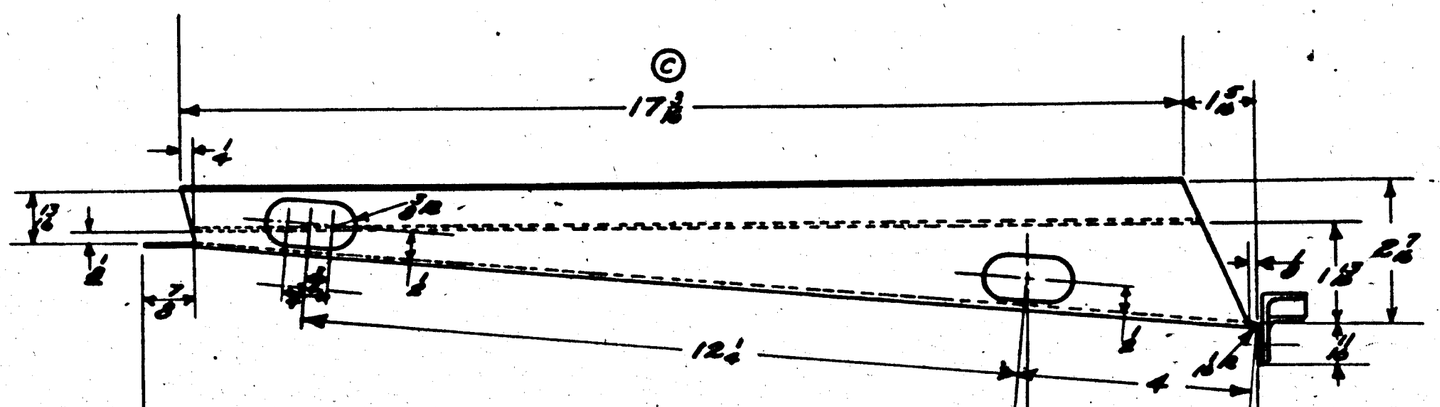

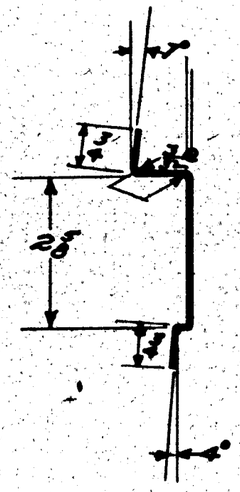

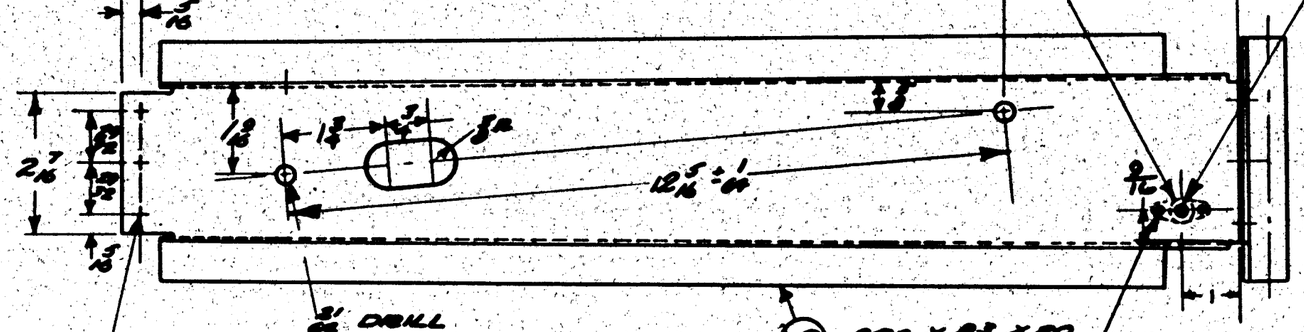

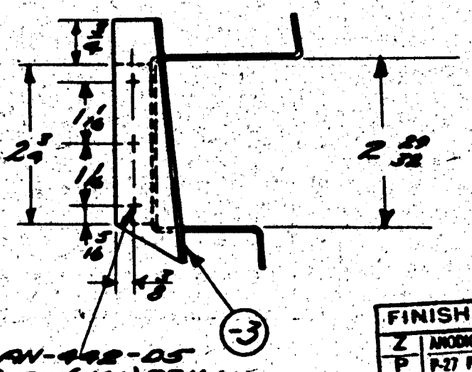

#6 (.199) DRILL

AC-386-01032

3/16 DRILL
2 HOLES
JIG DRILL WITH SERVO UNIT

3/16 DRILL
3 PILOT HOLES

-2 .050 x 6 3/4 x 60
AC. ALLOY SH.

AC-485-03
#40 (.098) DRILL - 2 HOLES
C'S'K - OUTSIDE.

AN-426-05
#30 (.161) DRILL
3 - HOLES

-3

FINISH CODE	
Z	ANODIC TREATMENT
P	P-27 PRIMER
AP	ALUMINIZED PRIMER
C	CADMIUM PLATE

GP-GREEN PRIME

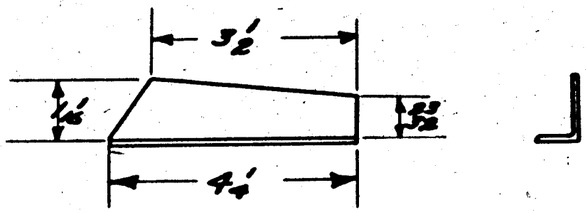

-3 3/4 x 1 1/4 x 3/32
ALCOA #734 FF

	PBY-5B	28C1001	1	AC-386-01032	1						
	PBY-5A	28C1001	1	AC-386-03		-3	1				
	PBY-4	28C1001		AN-426-04		-2		1			
O.H.	MODEL	NEXT ASSY.	REQ.	STD PARTS	LH REQ.	RH REQ.	PART NO.	LH REQ.	RH REQ.		

REPLACES C-86476

REPLACED BY

LIMIT ON DIMENSIONS UNLESS OTHERWISE SPECIFIED ± 1/32

APP. [redacted] DATE 3-23-38

CALC.WT. ACT.WT.

SCALE 6" = 1'0"

REQUIREMENTS PER AIRPLANE | MAT. | PARTS LIST PER ASSY.

NAVY NOTED | NOTED | NOTED | P-D-2 | MFGR 3-23-38

MATERIAL | SPEC. | HEAT TREAT | FINISH GP | DRAFT | CHECK | EXAM. | ENG.

CONSOLIDATED AIRCRAFT CORP. BUFFALO, N. Y.

STAMP PT. No. WHERE SHOWN

NAME CHANNEL - UPPER SERVO UNIT - SUPPORT.

DWG. NO. D-36CIA

ALL AL. ALLOY SHEET SPEC. 47310 (CONDITION 3) ALLOY 24A EXCEPT AS NOTED
ALL AL. ALLOY EXTRUSIONS SPEC. (CONDITION T) ALLOY 24T EXCEPT AS NOTED
HEAT TREAT ALL CONDITION A MATERIAL PER SPEC. 8000.
REMOVE ALL ALLOY SHEET AS NOTED

BELLANCA-HOCHGRAF CO., INC. BUFFALO

SUPPLIES & EQUIPMENT CLASSIFICATION			
LET	ALTERATION	DATE	BY
A	TRACED UP TO DATE	[illegible]	[illegible]

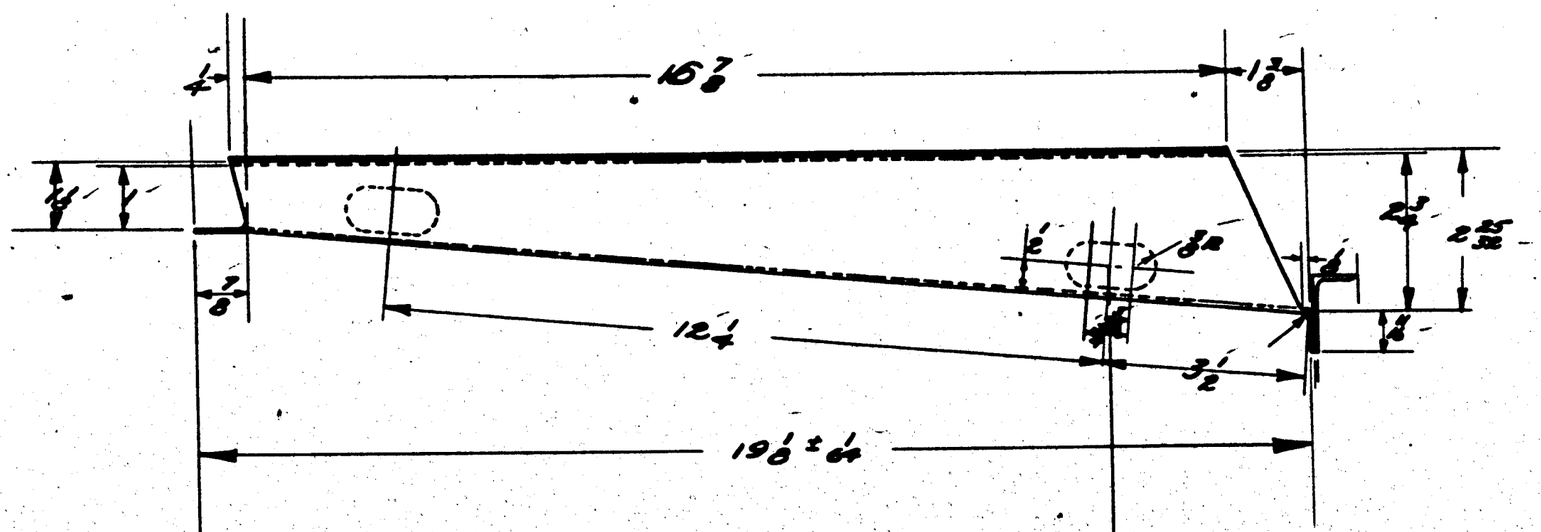

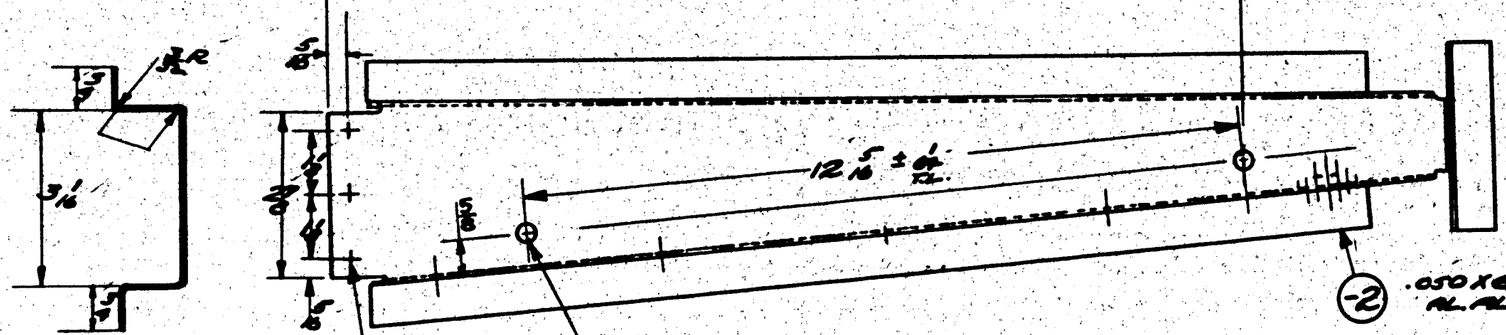

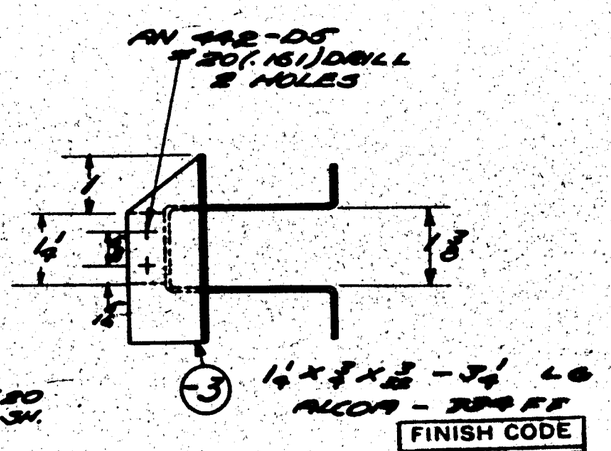

FINISH CODE	
Z	ANODIC TREATMENT
P	P-27 PRIMER
AP	ALUMINIZED PRIMER
C	CADMIUM PLATE

GP-GREEN PRIME

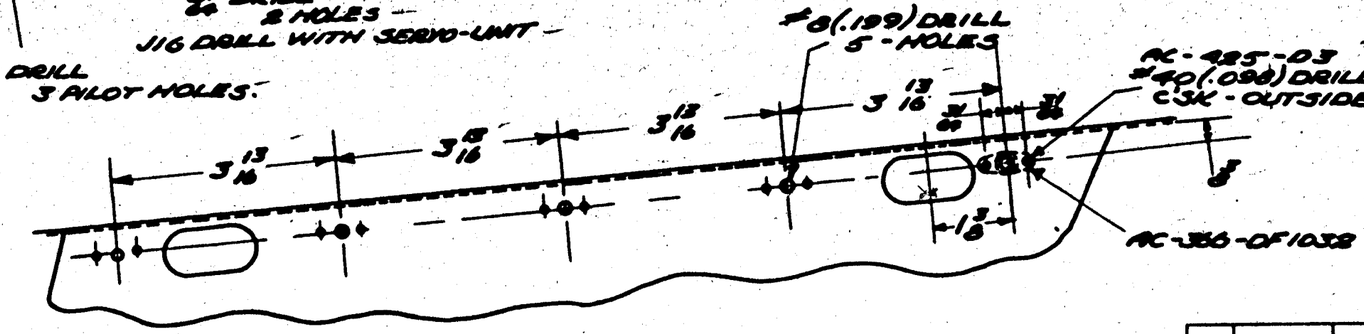

										LH	RH
PBY-5B	2BC1001	1	[illegible]								
PBY-5A	2BC1002	1	[illegible]					-3	1		
PBY-1	2BC1001	[illegible]						-2	1		
O.H.	MODEL	NEXT ASSY.	REQ.	ST'D PARTS	LH REQ.	RH REQ.	PART NO.			LH REQ.	RH REQ.

REQUIREMENTS PER AIRPLANE	MAT.	PARTS LIST PER ASSY.	
NAVY NOTED	NOTED	NOTED	[illegible]
MATERIAL	SPEC.	HEAT TREAT	FINISH GP

DRAFT	CHECK	ENGR.	ENG.	
[illegible]	[illegible]	[illegible]	[illegible]	

REPLACES

REPLACED BY

LIMIT ON DIMENSIONS UNLESS OTHERWISE SPECIFIED ± 1/32

APP. [illegible] DATE [illegible]

CALC. WT. ACT. WT.

SCALE 6" = 1'-0"

[redacted]

CONSOLIDATED AIRCRAFT CORP. BUFFALO, N. Y.

STRIP PT. No. WHERE SHOWN

NAME CHANNEL - LOWER SERVO UNIT - SUPPORT

DWG. NAME

D 2BC1130

ALL AL. ALLOY SHEET SPEC. 47A10 (CONDITION B) ALLOY 24-A EXCEPT AS NOTED
ALL AL. ALLOY EXTRUSIONS SPEC. 46A6 (CONDITION T) ALLOY 24-T EXCEPT AS NOTED
HEAT TREAT ALL CONDITION A MATERIAL PER SPEC. 3033 - CONO.T.
RIVETS AL. ALLOY EXCEPT AS NOTED

FRANKLIN-GRIFFITH CO., INC. BUFFALO
Industrial Finishing Chart

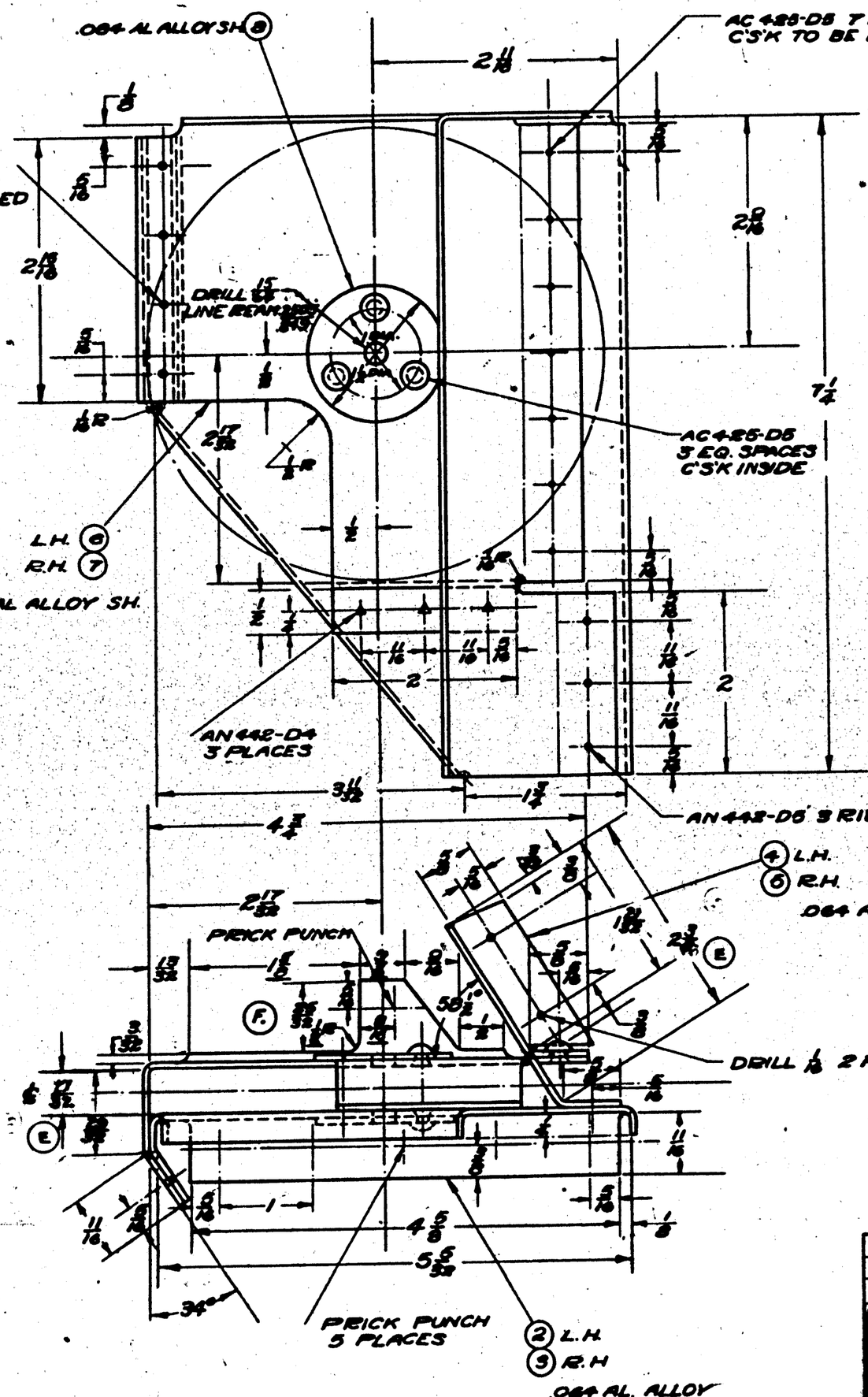

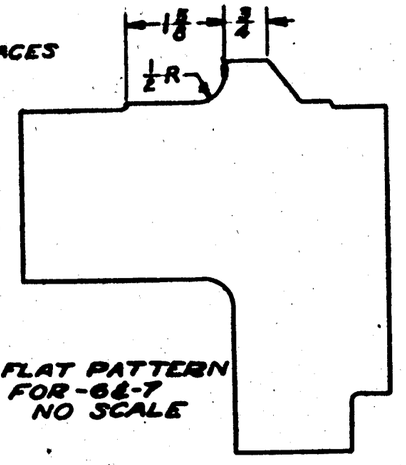

P.O. 69T1A
P.O. A2806

SUPPLIES & EQUIPMENT CLASSIFICATION			
LET	ALTERATION	DATE	BY
D	TRACED UP TO DATE		
E	[illegible]		
F	[illegible]		

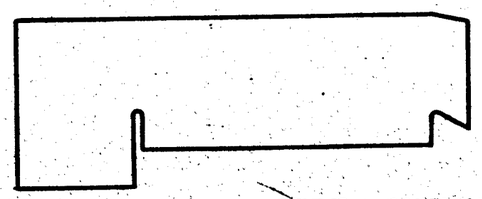

NOTE: ALL BEND RADII TO BE 1/16 R

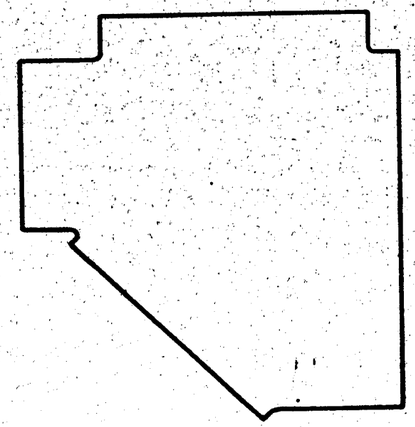

-1	2B-5	28C1015											
	2B-5	28C1015											
-1	PBY-5	28C1015											
	PBY-5	28C1015											
-1	PBY-4	28C1015										-8	B B
	PBY-4	28C1015										-7	1 1
-1	PBY-3	28C1015										-6	1 1
	PBY-3	28C1015										-5	1 1
-1	PBY-2	28C1015	AN442-D8	3	3							-4	1 1
	PBY-2	28C1015	AN442-D6	3	3							-3	1 1
-1	PBY-1	28C1015	AN442-D6	13	13							-2	1 1
	PBY-1	28C1015											

REPLACES													
REPLACED BY													
LIMIT ON DECIMALS UNLESS OTHERWISE SPECIFIED	± 1/64												
SCALE 12" = 1'-0"													
MATERIAL													
CONSOLIDATED AIRCRAFT CORP. BUFFALO, N. Y.													

O.H.	MODEL	NEXT ASSY.	REQ.	ST'D PARTS	LH REQ.	RH REQ.	PART NO.	LH REQ.	RH REQ.
REQUIREMENTS PER AIRPLANE							PARTS LIST PER ASSY.		

MAT.	SPEC.	HEAT TREAT	FINISH
	47A10	SEE 85 Cond T	Z-P-8AKV

DRAFT	CHECK	ENGR.	ENGR.
CW			

NAME BRACKET-AILERON CONT. PULLEY-BLKH'D #5 OUTER

DWG. NO. D28C1015

E.O. 22292

LET	ALTERATION	DATE	BY
B	TRACED	2-1-38	WEIR
C.	PARTIAL DETAIL ADDED SHOW- ENLARGED OPENING DIM.	10-31-40	DUST
D	FOR -50 ASS'Y. CHGD PATTERN OF OPENING TO 7/8 DEEP X 2 3/4 REAMED DIA 5/16 WT. CHG IN EO.	9-15-42	[illegible]
E	REMOVED FROM FAIR OR DWG. MAT. FOR (a) AL. ALL. CASTS, ALCOA 195-T-4, SPEC. 46A1-CL-4. H.T. 29,000 #/IN. REPLACED WITH NOTE: "PER 6 (a)(c)(c) (WT. CHG. INC.)	12-1-42	[illegible]

SUPPLIES & EQUIPMENT CLASSIFICATION

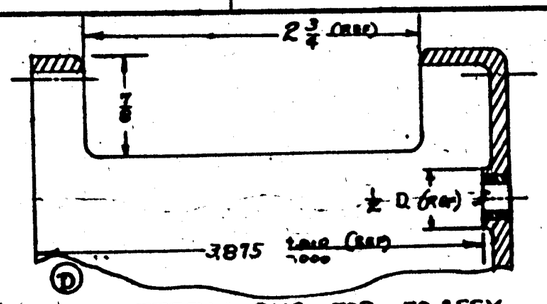

PATTERN CHG FOR -50 ASSY.

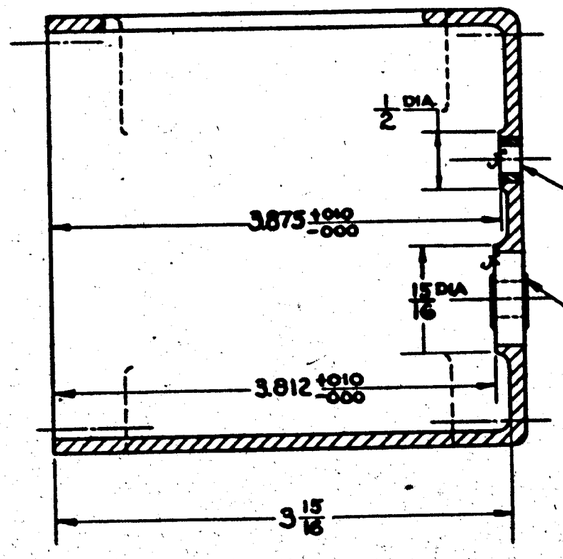

SECTION A-A

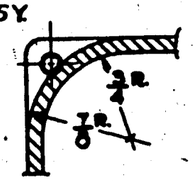

SECTION B-B

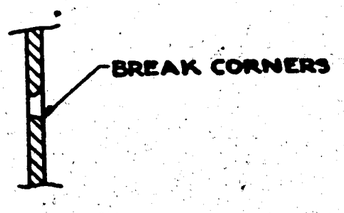

SECTION C-C

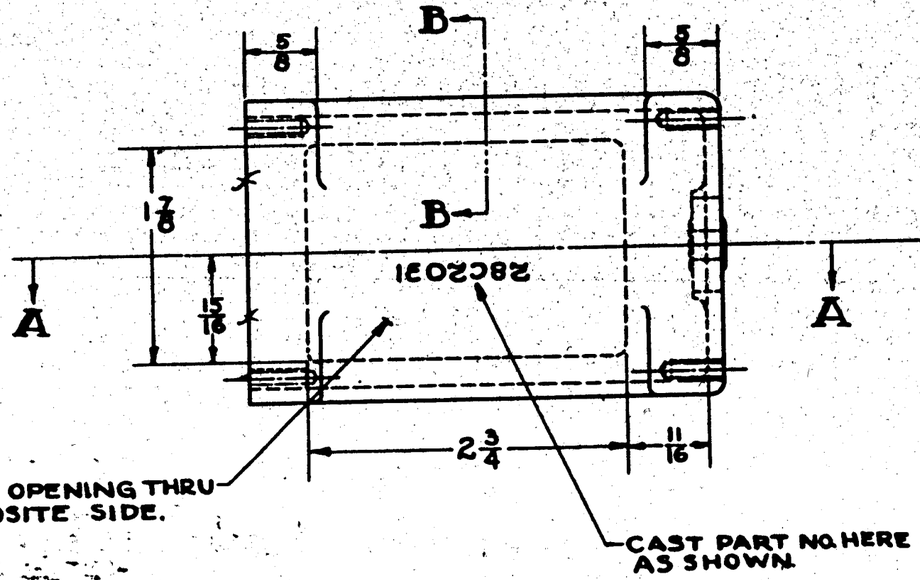

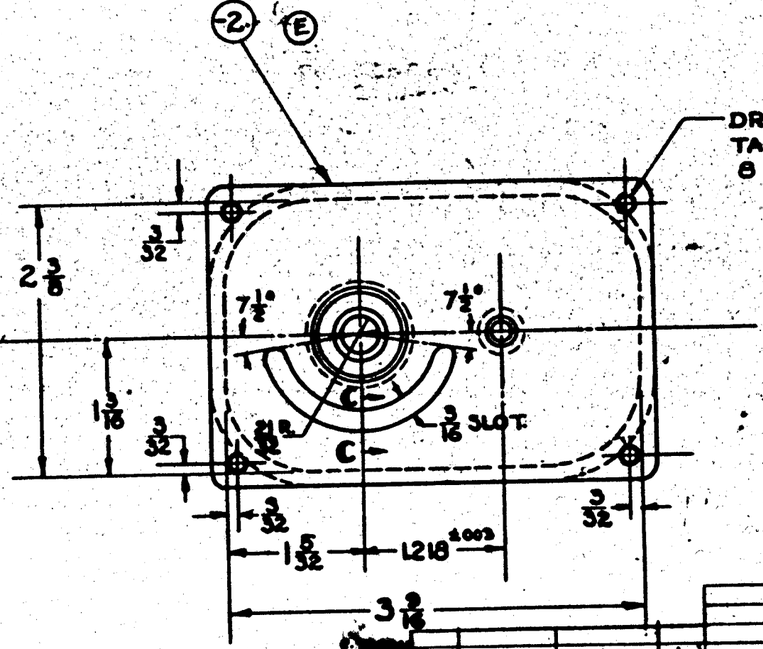

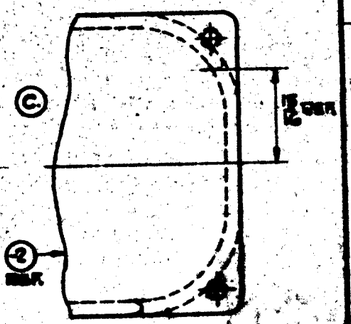

-50 ASSY.
USED ONLY ON MODEL PBY-5 SERIAL [illegible] #2 AIRPLANE U-[illegible].

NOTES:-

1. ALL WEBS TO BE 1/8 THICK.
2. ALL RADII AND FILLETS NOT NOTED TO BE 1/8 R.
3. INSIDE DIMENSIONS OF BOX MUST BE HELD.
4. FINISH: "Z-P" BEFORE PRESSING IN BEARINGS. PAINT 2 COATS DULL BLACK ENAMEL AFTER.
5. MATERIAL: FOR -2

(E) (a) AL. ALL. 356 T6, SPEC. AN-QQ-A-394, H.T. 30,000 #/□ IN.
(b) AL. ALL. 3195 T6, SPEC. AN-A-5, CL II, H.T. 32,000 #/□ IN.
(c) AL. ALL. 195 T4, SPEC. AN-QQ-A-390, CL. I, H.T. 29,000 #/□ IN.

[redacted]

O. H.	MODEL	NEXT ASSY.	REQ.	STD PARTS	LH	RH	PART NO.	LH	RH	LH	RH	LH	RH	LH	RH
					REQ.			REQ.		REQ.		REQ.		REQ.	
-50	PBY-5A	28C2030	1				FAFNIR KSA 8512-S-8	1							
-0	PBY-5	28C2030	1				-2	1							
-0	[illegible]	28C2030	1												
-0	[illegible]	28C2030	1												
-50	PBY-5A	28C2030	1												
-50	USCG	28C2030	1												
-50	[illegible]	28C2030	1												
-50	PBY-5B	28C2030	1												
-50	PBY-5	28C2030	1												
	PBY-4	28C2030													
	PBY-3	28C2030													
	PBY-2	28C2030													

- REQUIREMENTS PER AIRPLANE | MAT. | PARTS LIST PER ASSY. | -50

A C NAVY	NOTED	NOTED	NOTED	NOTED
	MATERIAL	SPEC.	HEAT TREAT	FINISH

REPLACES	APPROVED	DATE
REPLACED BY	CALC. WT.	ACT. WT.
1/32 ± .010 UNLESS OTHERWISE SPECIFIED ±	12" = 1'-0" SCALE	

CONSOLIDATED AIRCRAFT CORP. SAN DIEGO, CALIF.

NAME: BOX - AILERON TAB CONTROL - GEAR

DEPT. NAME

DWG. P 28C2031

LET	ALTERATION	DATE	BY
S	TRACED NO WT. ENG.	2/14/38	[illegible]

ASSY.	"L"	
-0	40'-2"	482"
-4	30'-11 1/4"	371 1/4"
-10	39'-2 1/2"	458 1/2"
-11	29'-2 5/16"	350 5/16"
-16	31'-1 3/16"	373 3/16"
-50	38'-1 1/2"	457 1/2"
-52	29'-1 1/16"	349 1/16"

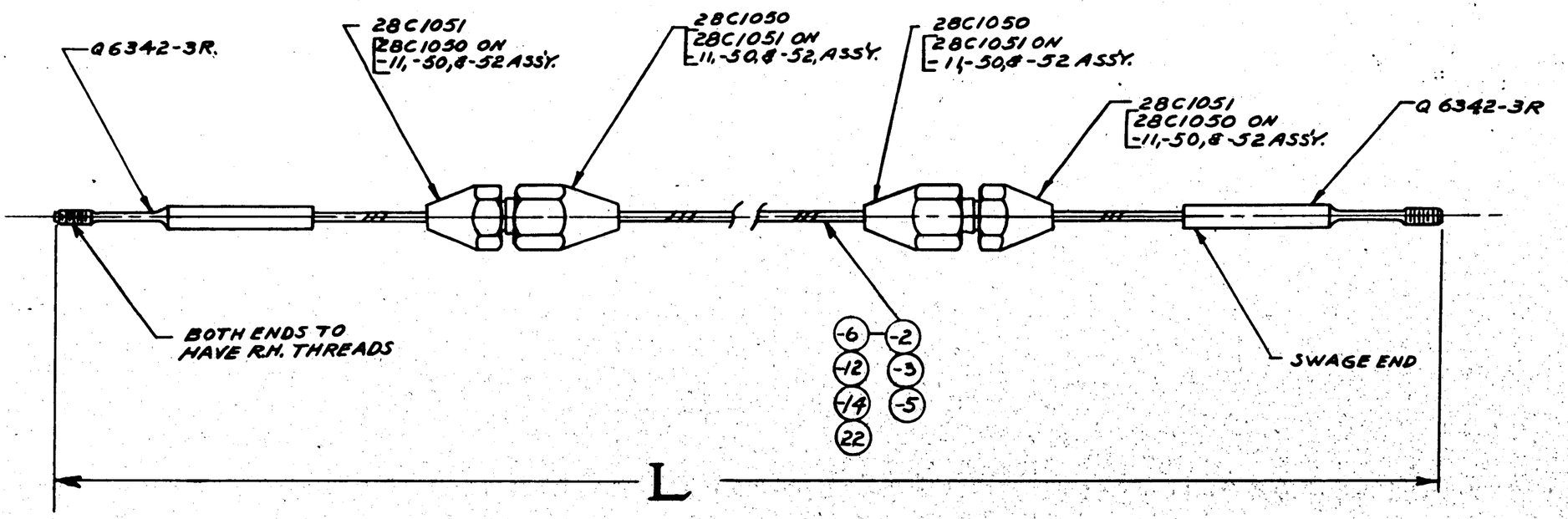

NOTES:
1. PRESTRETCH CABLE ASSY. TO 442 LBS. WHICH IS 60% OF RATED STRENGTH.
2. CABLE TO BE COATED WITH PARALKATONE SPEC. RM-61 TYPE B PER SPEC. SR15C.
3. SWAGE TERMINALS AS PER SPEC. T-46B

CONT.*88476	-52	PBY-5A	28C2030	1															
	-52	28-5AMN		1															
	-50	PBY-5B		1															
CONT.*91876	-50	PBY-5		1															
	-50	28-5MN		1															
CONT.*70496&77713	-16	PBY-5A		1															
	-11	28-5AMC		1															
	-10	28-5ME		1															
	-10	28-5MC		1	Q6342-3R					2		2		2		2	2	2	2
	-10	28-5MA		1															
CONT.*70496	-0	PBY-5		1	28C1051					2		2		2		2	2	2	2
	-4	XPBY-5		1	28C1050					2		2		2		2	2	2	2
	-0	PBY-4		1															
	-0	PBY-3		1															
	-0	PBY-2	28C2030	1	-22	3/32 x 7 x 7	carbon flexible cable	AN-RR-C-43											1
					-4	3/32 x 7 x 7		AN-RR-C-43										1	
					-12	3/32 x 7 x 7		AN-RR-C-43									1		
					-6	3/32 x 7 x 7		AN-RR-C-43										1	
					-3	3/32 x 7 x 7		AN-RR-C-43								1			
					-5	3/32 x 7 x 7		AN-RR-C-43											
					-2	3/32 x 7 x 7	carbon flexible cable	AN-RR-C-43		1									
ASSY. DASH NO.	MODEL	NEXT ASSY.	QTY.	PART NO.	STOCK	MATERIAL	SPEC.	LH REQ.	RH REQ.	LH REQ.	RH REQ.	LH REQ.	RH REQ.	LH REQ.	RH REQ.	LH REQ.	RH REQ.		
REQUIREMENTS PER AIRPLANE				PARTS LIST PER ASSY.				-0		4		-10		-11		-16		-50	-52

REPLACES 28C2036 OF 11-28-3 — .82 Shop Wt.
REPLACED BY — Adv. Wt.
± 1/8 — SCALE 12" = 1'-0"
STAMP PART NUMBER WHERE SHOWN

AC		WEAR	C.W.		R.E.R.	L.C.W.
NAVY NONE	SEE NOTE #2	11-28-3	MILLER			2-14-38
HEAT TREAT	FINISH	DRAFT	CHECK	STRUCT.	MAT.	APPROV.	ENG.

NAME ASSY.-AILERON - TAB CONTROL-FORWD. CABLE
OPP. HAND
SIZE D
28C2036
CONSOLIDATED VULTEE AIRCRAFT CORP. SAN DIEGO DIVISION . . SAN DIEGO, CALIF.

R

28C2036

BREWSTER E.O.# 316-9

LET	ALTERATION	DATE	BY
	SUPPLIES & EQUIPMENT CLASSIFICATION		
A	TRACED	1-31-38	
B	1.1243-1.1238 WAS 1.1240-1.1235		

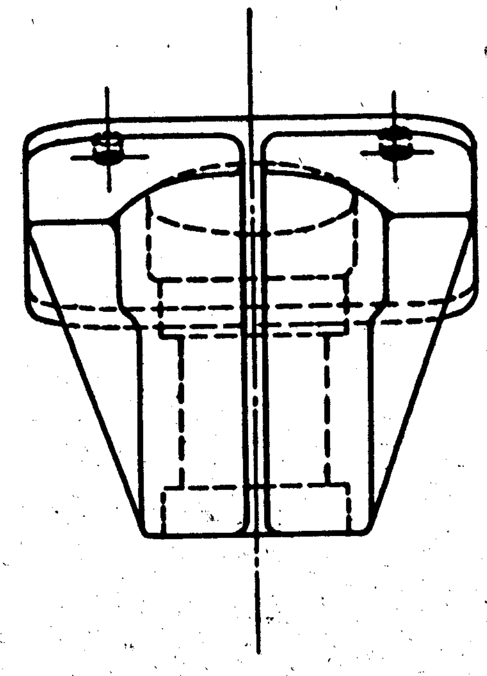

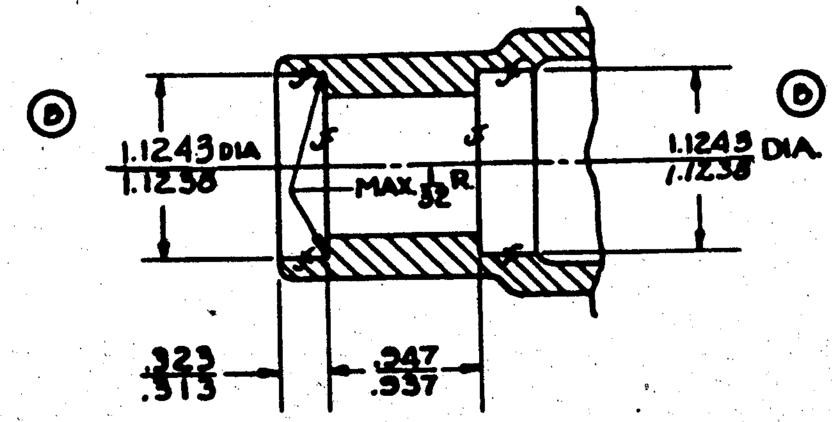

DETAIL B
SHOWING MACHINING

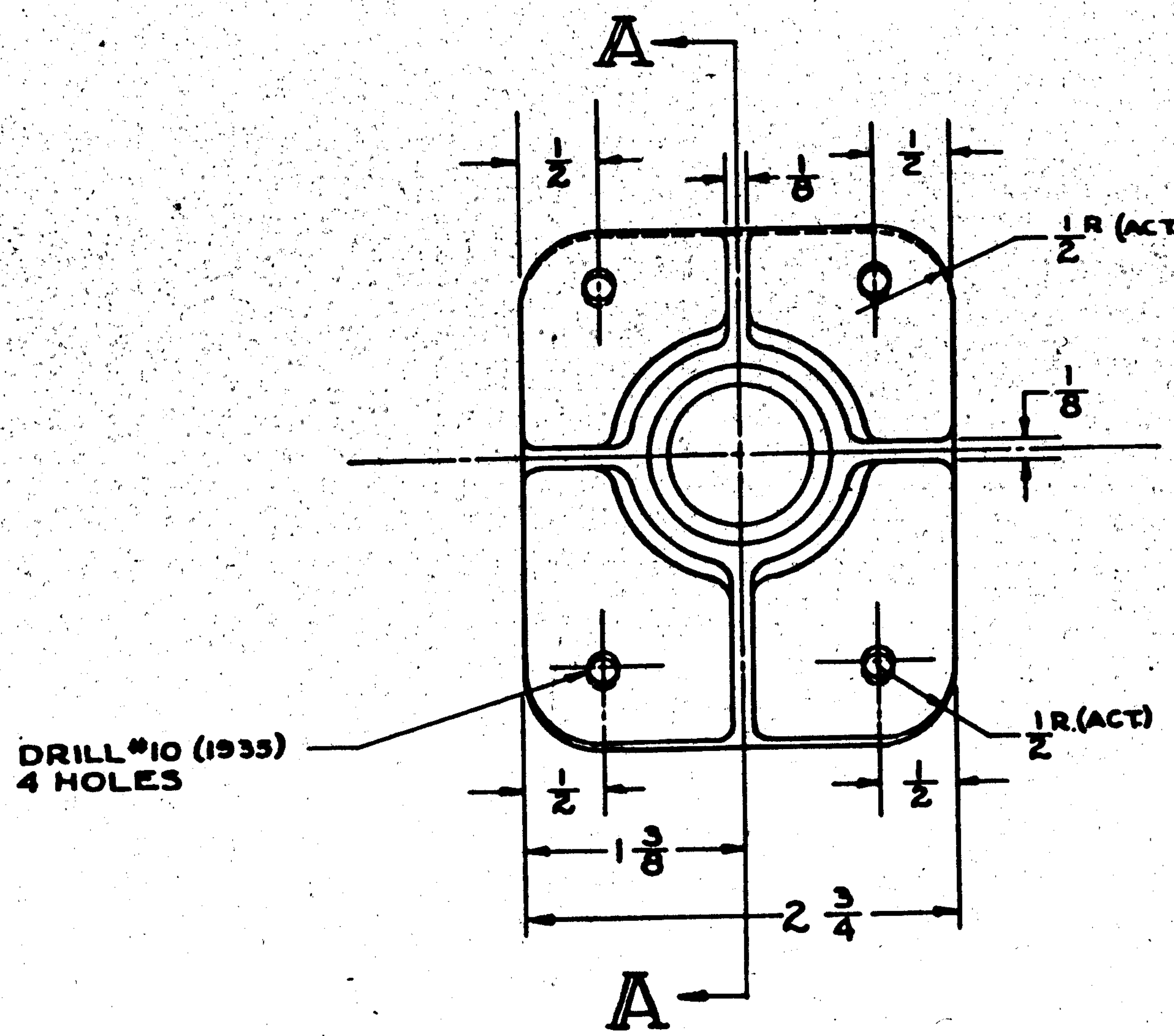

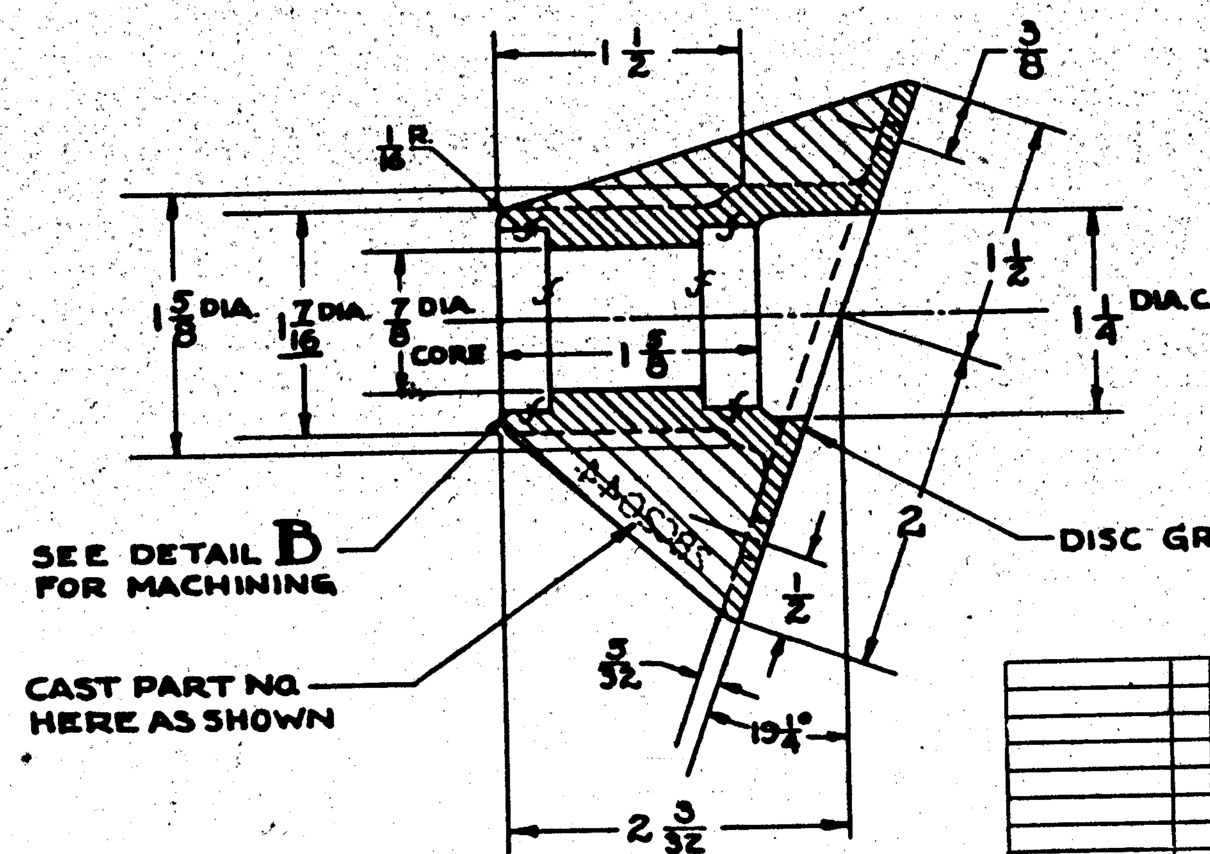

SECTION A-A

NOTE:-
ALL RADII AND FILLETS
NOT NOTED TO BE 1/4 R.

[redacted]

MODEL	NEXT ASSY.	REQ.
PBY-5A	28C2045	1EA
PBY-3	28C2045	1
PBY-5	28C2045	
PBY-4	28C2045	
PBY-3	28C2045	
PBY-2	28C2045	

G. H. | MODEL | NEXT ASSY. | REQ. | ST'D PARTS | LH RH REQ. | PART NO. | LH RH REQ. — REQUIREMENTS PER AIRPLANE | MAT. | PARTS LIST PER ASSY.

REPLACES	APPROVED [redacted] DATE 1-31-38
REPLACED BY	CALC. WT. .31 LBS. / ACT. WT.
± 1/32 ± .010 LIMIT ON DIMENSIONS UNLESS OTHERWISE SPECIFIED	SCALE 12" = 1'-0"

A C				
NAVY AL. ALLOY CAST.	46A1-CL-4	29,000#/SQ.IN.	Z-P-2[redacted]-GP	
MATERIAL	SPEC.	HEAT TREAT	FINISH	

DRAFT	CHECK	EXAM.	ENG.
WEIR		CN	R.
10-23-36		MASE	

CONSOLIDATED AIRCRAFT CORP.
SAN DIEGO, CALIF.
STAMP PT. NO. WHERE SHOWN

NAME SUPPORT-AILERON TAB CONTROL-MECHANISM

OPP. HAND

DWG. D 28C20

SUPPLIES & EQUIPMENT CLASSIFICATION			
LET	ALTERATION	DATE	BY
C	TRACED	2-4-38	Wm
D	REVISED RIVET SPACING PY-4 & PY-3	4-6-38	Wm

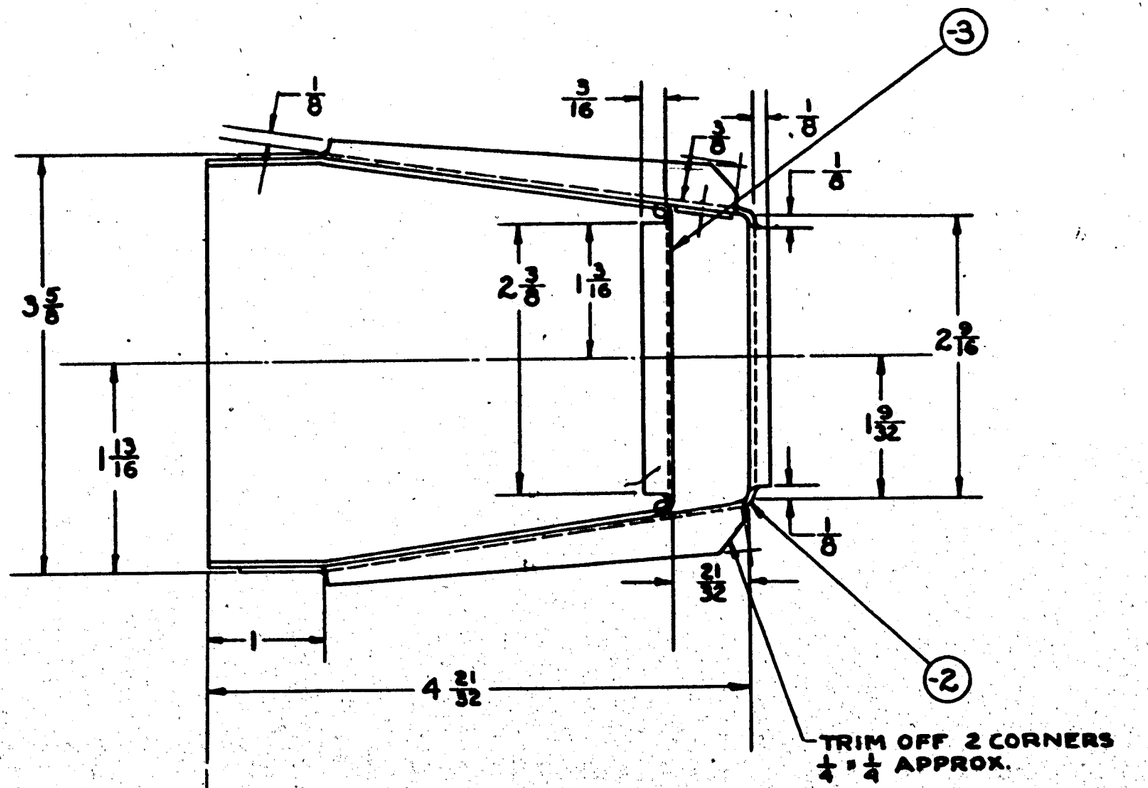

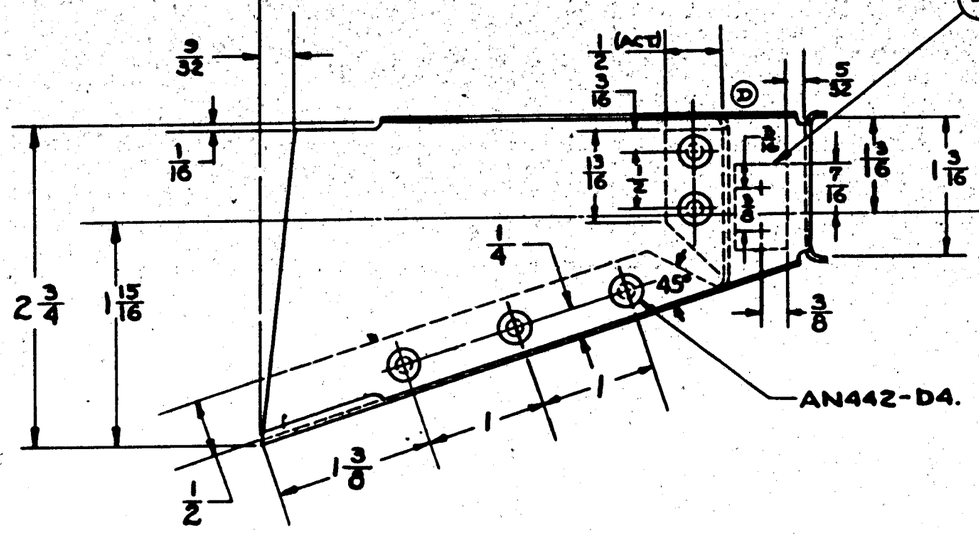

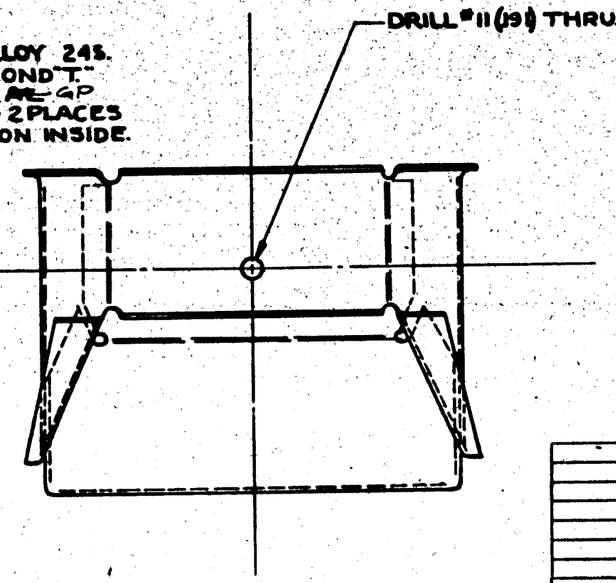

GP GREEN PRIME
[redacted]

-2 .040 ALUM. ALLOY SHT-24S
SPEC:- 47A10 COND. A H.T. SR53
3 FINISH:- Z-P-2 GP

NOTE:-
ALL BEND RADII TO BE 1/16 R.

O. H.	MODEL	NEXT ASSY.	REQ.	ST'D PARTS	LH REQ.	RH REQ.	PART NO.	-4	-3	-2
	PBY-5A	28C1019	1							
	PBY-5	28C1019	1							
	PBY-4	28C1019		AC423-D4	2					
	PBY-3	28C1019		AN442-D4		8				
	PBY-2	28C1019								

REQUIREMENTS PER AIRPLANE | MAT. | PARTS LIST PER ASSY.

REPLACES	[redacted] 2-4-38 APPROVED DATE		
REPLACED BY	.18 CALC. WT. S.H.A. ACT. WT.		
1/32 UNLESS OTHERWISE SPECIFIED ±	12" = 1'-0" SCALE		
[redacted]			

AC				Weber		Cox	
NAVY NOTED	NOTED	NOTED	NOTED	4-2-38		Mueller	R.
MATERIAL	SPEC.	HEAT TREAT	FINISH	DRAFT	CHECK	EXAM.	ENG.

CONSOLIDATED AIRCRAFT CORP. SAN DIEGO, CALIF.

NAME BRACKET-AILERON TAB CONTROL-CENTER SECTION

OPP. HAND

DWG. D 28C2052

F TRACED 2-1-38 WEIR
G ADDED VIEW-D & SECTION E-E. ADDED NOTE ÷ 28C2059-2 & -3 IDENTICAL 1-13-42 JONES

DIRECTION OF FIBRE

SECTION E-E
FOR -2 & -3 ASS'YS ONLY
SCALE - 12" = 1'-0"

SECTION A-A

SECTION C-C

SERRATE AS SHOWN

SECTION B-B

NOTE - 28C2059-2 & -3 IDENTICAL TO 28C2059-1 & -P RESP. EXCEPT FOR TRIMMING. ALL BEND BUTT PART WHICH MAY BE MADE COLD ARE 1-1 PARTS.

28C2059 L.H. SHOWN
28C2059 R.H. OPPOSITE

NOTE -
ALL FILLET RADII NOT GIVEN TO BE $\frac{1}{8}$R
DRAFT ANGLES TO BE 7°

HOLD THIS DIM ABOUT BUSH'G

2	PBY-5A	28C2005	2	-L	
2	PBY-5A	28C2005	2	-R	
2	28-5MA	28C2005	2	-L	
2	28-5MA	28C2005	2	-R	
2	PBY-5	28C2005	2	-L	
2	PBY-5	28C2005	2	-R	
1	PBY-4	28C2005		-L	
1	PBY-4	28C2005		-R	
1	PBY-3	28C2005		-L	
1	PBY-3	28C2005		-R	
1	PBY-2	28C2005		-L	
1	PBY-2	28C2005		-R	

Q610-6-G

1/32 IN. TOL. ON 2-PLACE DEC. ±.010

MACHINING ALUM ALLOY 42,000 PSI AS RECD NONE 10-22-38 GREEN CN Bessey 10-31-38 R

28C2059-1

LEVER-CONT-RUDDER PEDAL-TRIP

D 28C2059

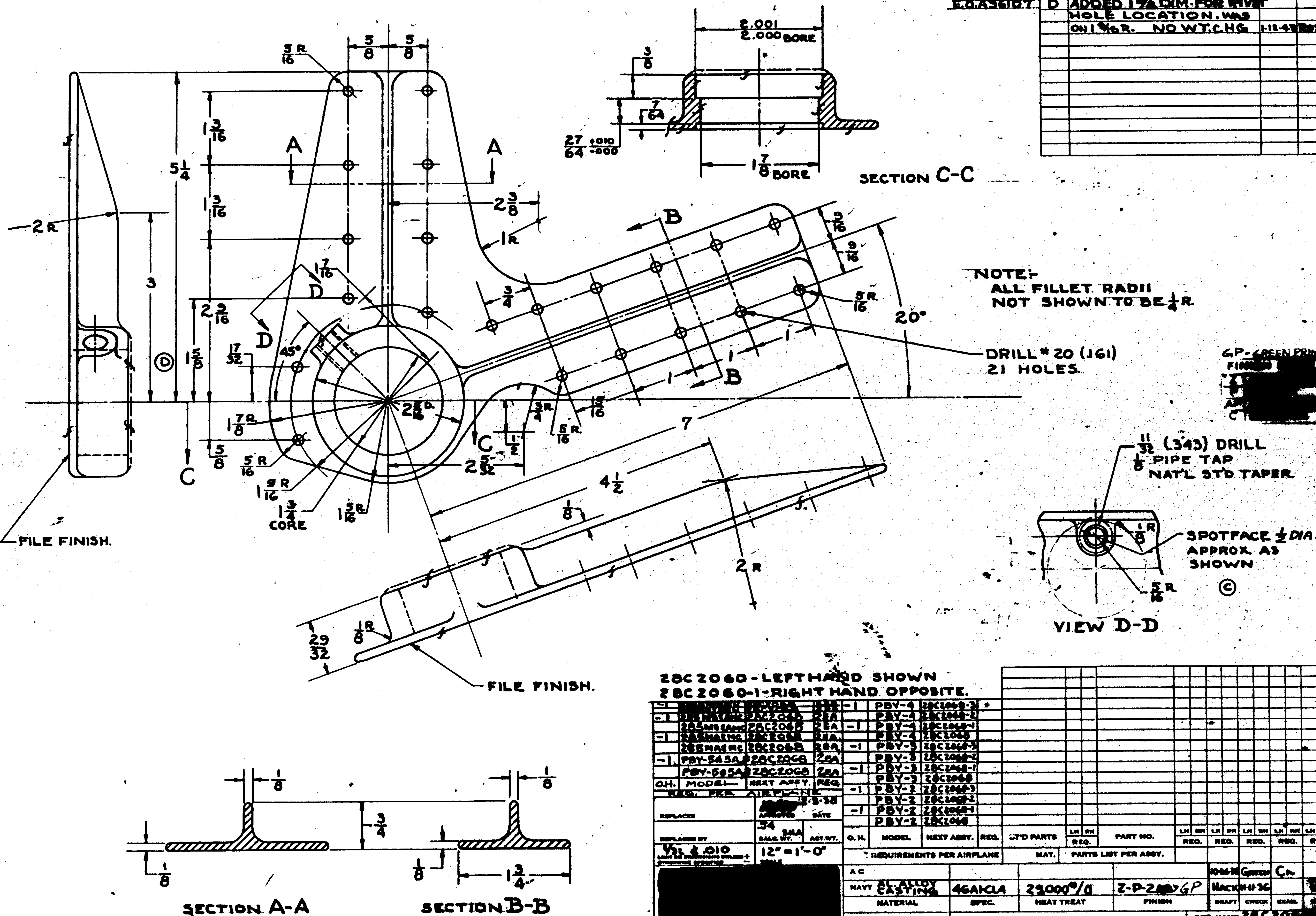

GP-GREEN PRIME FINISH [redacted]

LET	ALTERATION	DATE	BY
B	TRACED	2-3-38	[illegible]
C	SPOTFACE IN VIEW D-D WAS 1/4 R (PBY-5 ALL)	8-16-40	[illegible]
D	ADDED 1 5/8 DIM. FOR RIVET HOLE LOCATION. WAS ON 1 9/16 R. NO WT. CHG. (E.O. A36107)	1-12-43	[illegible]

SUPPLIES & EQUIPMENT CLASSIFICATION

28C2060 - LEFT HAND SHOWN
28C2060-1 - RIGHT HAND OPPOSITE.

O.H.	MODEL	NEXT ASSY.	REQ.
-1	[illegible]	[illegible]	[illegible]
-1	28-5 MA [illegible]	28C2068	2EA
	28-5 MB & AMC	28C2068	2EA
-1	28-5 MA & MC	28C2068	2EA
	28-5 MA & MC	28C2068	2EA
-1	PBY-5 & 5A	28C2068	2EA
	PBY-5 & 5A	28C2068	2EA

REQ. PER AIRPLANE

O.H.	MODEL	NEXT ASSY.	REQ.
-1	PBY-4	28C2068-3	*
	PBY-4	28C2068-2	
-1	PBY-4	28C2068-1	
	PBY-4	28C2068	
-1	PBY-3	28C2068-3	
	PBY-3	28C2068-2	
-1	PBY-3	28C2068-1	
	PBY-3	28C2068	
-1	PBY-2	28C2068-3	
	PBY-2	28C2068-2	
-1	PBY-2	28C2068-1	
	PBY-2	28C2068	

REQUIREMENTS PER AIRPLANE

STD PARTS	LH REQ.	RH REQ.	PART NO.	LH REQ.	RH REQ.	LH REQ.	RH REQ.	LH REQ.	RH REQ.	LH REQ.	RH REQ.	LH REQ.	RH REQ.

MAT. | PARTS LIST PER ASSY.

REPLACES	APPROVED [illegible]	DATE 2-3-38
REPLACED BY	CALC. WT. .54	ACT. WT. SMA
LIMIT ON DIMENSIONS UNLESS OTHERWISE SPECIFIED ±1/32 & .010	SCALE 12" = 1'-0"	

[redacted]

A C					DRAFT	CHECK	EXAM.
NAVY	AL. ALLOY CASTING	46A1CL4	29000#/□	Z-P-2 [illegible] GP	10-26-36 Green	Hack 11-11-36	Cn
	MATERIAL	SPEC.	HEAT TREAT	FINISH			

CONSOLIDATED AIRCRAFT CORP.
SAN DIEGO, CALIF.

NAME: ARM-CONTROLS-RUDDER PEDAL MAST-REINF.

OPP. HAND 28C20[illegible]

DWG. D 28C20[illegible]

SUPPLIES & EQUIPMENT CLASSIFICATION			
LET	ALTERATION	DATE	BY
D	TRACED	1-28-38	[illegible]
E	1/8 RAD. WAS 1/16. (INT. CORS. NEG.)	2-11-43	[illegible]
F	IN FRONT VIEW & IN END VIEW		
	REMOVED PORTION OF WEB. 1 PC.		
	DIM. WAS 5/8. (NEG. WT. CHG.)	6-24-43	STRAIGHTENED

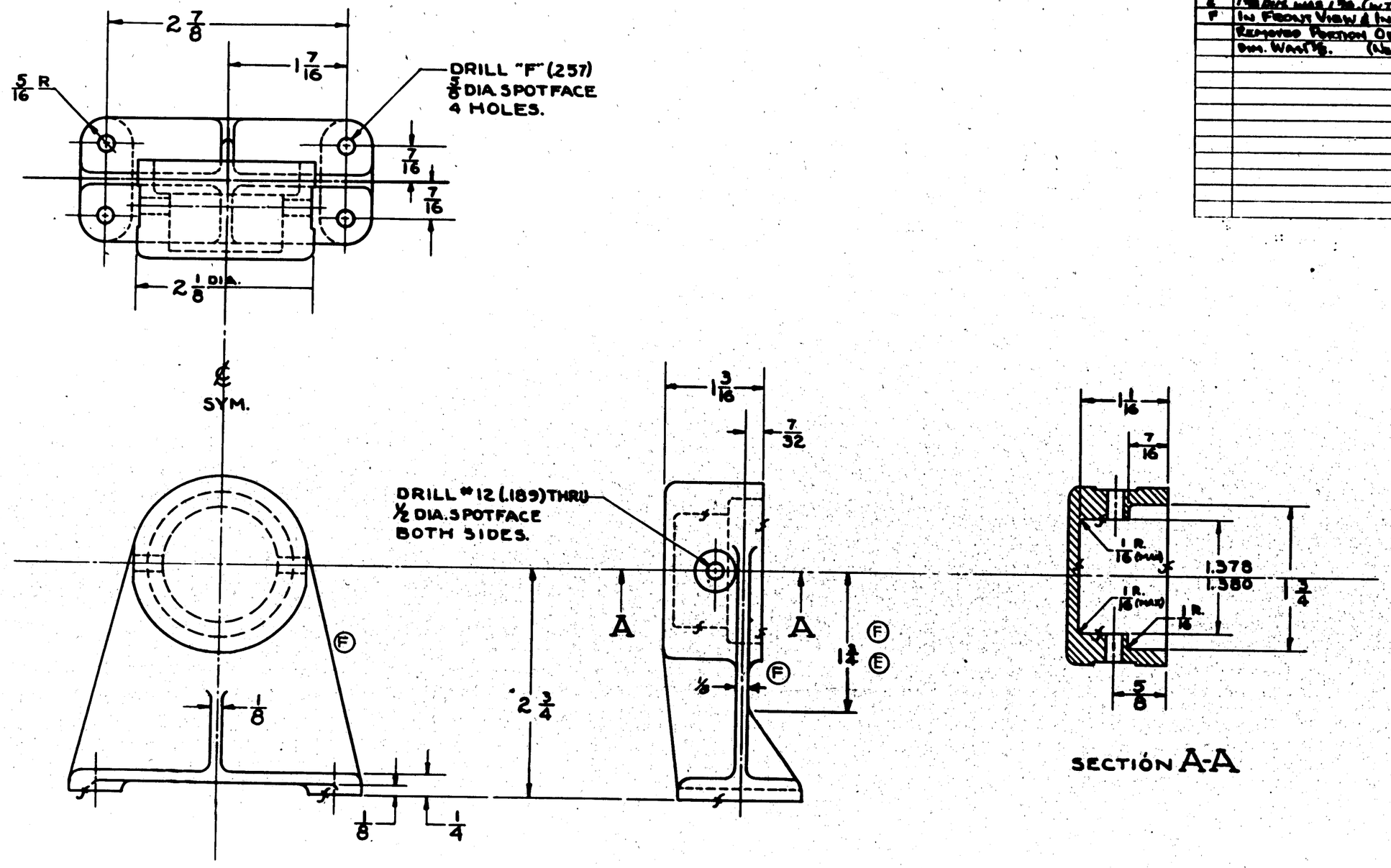

SECTION A-A

NOTE:-
ALL FILLETS 1/8 R.
EXCEPT AS
NOTED

O.H.	MODEL	NEXT ASSY.	REQ.	ST'D PARTS	LH REQ.	RH REQ.	PART NO.	LH REQ.	RH REQ.	LH REQ.	RH REQ.	LH REQ.	RH REQ.	LH REQ.	RH REQ.
	PBY-5	28C2005	4												
	28-5AK-AMH	28C3705	4 EA.												
	28-5AK-MH	28C2005	4 EA.												
	28-5AMH	28C2005	4 EA.												
	PBY-5B	28C2005	4												
	PBY-5A	28C3705	4												
	PBY-4	28C2005	4												
	PBY-3	28C2005	4												
	PBY-2	28C2005	4												

REQUIREMENTS PER AIRPLANE — MAT. — PARTS LIST PER ASSY.

REPLACES		APPROVED	DATE
	K Cui	1-28-38	
REPLACED BY	.38 SHA.	CALC. WT.	ACT. WT.
LIMIT ON DIMENSIONS UNLESS OTHERWISE SPECIFIED	1/64	SCALE	12" = 1'-0"

A C								
NAVY	AL. ALLOY CASTING	46A1-CL-4	29,000 #/□	Z-P-2AL	10-26-36	GREEN	CK.	
MATERIAL		SPEC.	HEAT TREAT	FINISH	HACK	10-30-36		R.
					DRAFT	CHECK	STAM.	ENG.

CONSOLIDATED AIRCRAFT CORP. SAN DIEGO, CALIF.
STAMP BY NO WHERE SHOWN

NAME: BEARING - CONTROLS RUDDER PEDAL - SHAFT

OPP. HAND

DWG. D 28C2061

Florence Palmer R

1902382

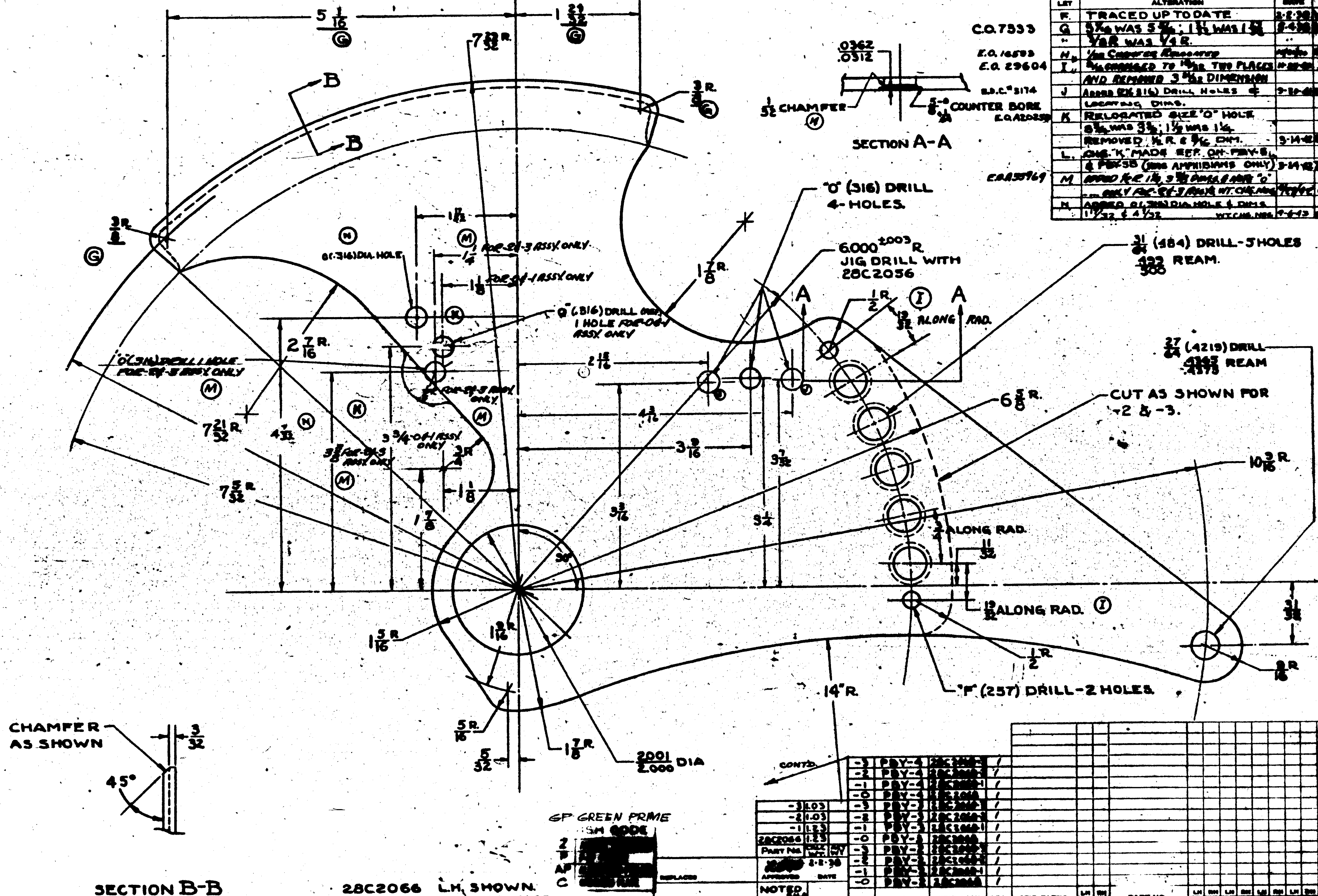

C.O.7333
E.O.16583
E.O.29604
E.D.C.#3174
E.O.A20259
E.O.A35969

SUPPLIES & EQUIPMENT CLASSIFICATION

LET	ALTERATION	DATE	BY
F.	TRACED UP TO DATE	2-2-38	[illegible]
G	5 1/16 WAS 5 ...; 1 21/32 WAS 1 ...	8-4-38	[illegible]
"	3/8 R WAS 1/4 R.	"	-
H	1/32 Chamfer Relocated	[illegible]	[illegible]
I	... CHANGED TO 19/32 TWO PLACES	[illegible]	[illegible]
	AND REMOVED 3 9/32 DIMENSION		
J	ADDED (2) (.316) DRILL HOLES &	9-30-41	[illegible]
	LOCATING DIMS.		
K	RELOCATED SIZE "O" HOLE		
	3 3/8 WAS 3 ...; 1 1/8 WAS 1 1/4		
	REMOVED 1/2 R. & ... DIM.	3-14-42	[illegible]
L.	CHG. "K" MADE EFF. ON PBY-5		
	& PBY-5B (... AMPHIBIANS ONLY)	3-14-42	[illegible]
M	ADDED REF 1 1/4, 3 3/8 DIMS & NOTE "O"		
	... ONLY FOR-24-3 ASSY. WT. CHG. NEG.	[illegible]	[illegible]
N	ADDED O (.316) DIA. HOLE & DIMS.		
	1 17/32 & 4 7/32 WT. CHG. NEG.	9-6-43	[illegible]

28C2066 L.H. SHOWN.
28C2066-1 R.H. OPPOSITE.
28C2066-2 L.H. SHOWN
28C2066-3 R.H. OPPOSITE

[illegible]	[illegible]	28C2068	1 EA.
[illegible]	[illegible]	28C2068	1
[illegible]	[illegible]	28C2068	1 EA.
[illegible]	[illegible]	[illegible]	1 EA.
[illegible]	[illegible]	[illegible]	1
[illegible]	[illegible]	[illegible]	1
[illegible]	[illegible]	[illegible]	1
[illegible]	[illegible]	[illegible]	1
[illegible]	[illegible]	[illegible]	1
[illegible]	[illegible]	[illegible]	1
[illegible]	[illegible]	[illegible]	1
[illegible]	[illegible]	[illegible]	1

-3	28-...	28C2068	1 EA.
-3	28-...	28C2068	1 EA.
-3	28-...	28C2068	1 EA.
-3	[illegible]	28C2068	1 EA.
-3	[illegible]	[illegible]	1 EA.
[illegible]	[illegible]	[illegible]	1 EA.
[illegible]	[illegible]	[illegible]	1 EA.
[illegible]	[illegible]	[illegible]	1 EA.

GP GREEN PRIME
FINISH CODE
2 [redacted]
P
AF
C

Part No.	Calc. Wt.	Act. Wt.
-3	1.03	
-2	1.03	
-1	1.23	
28C2066	1.23	

APPROVED [illegible] DATE 2-2-38
NOTED
REPLACES
REPLACED BY
LIMIT OF DIMENSIONS UNLESS NOTED ± 1/64
SCALE 12" = 1'-0"

[redacted]

D.H.	MODEL	NEXT ASSY.	REQ.
-3	PBY-4	28C2068-3	1
-2	PBY-4	28C2068-2	1
-1	PBY-4	28C2068-1	1
-0	PBY-4	28C2068	1
-3	PBY-3	28C2068-3	1
-2	PBY-3	28C2068-2	1
-1	PBY-3	28C2068-1	1
-0	PBY-3	28C2068	1
-3	PBY-2	28C2068-3	1
-2	PBY-2	28C2068-2	1
-1	PBY-2	28C2068-1	1
-0	PBY-2	28C2068	1

REQUIREMENTS PER AIRPLANE

ST'D PARTS | LH RH REQ. | PART NO. | LH RH REQ. | LH RH REQ. | LH RH REQ. | LH RH REQ.

MAT. | PARTS LIST PER ASSY.

AC 24S				
NAVY 24S AL. ALLOY	[illegible]	NONE	Z-P 2...	
MATERIAL	SPEC.	HEAT TREAT	FINISH	DRAFT / CHECK

CONSOLIDATED AIRCRAFT CORP. SAN DIEGO, CALIF.

NAME ARM - CONTROLS RUDDER PEDAL

D 28C2...

E.O. #A 90651

LET	ALTERATION	DATE	BY
K	REDRAWN AS REVISED AS PER E.O. A 90651. CHG'D. PART NO. -6 (WAS -5). AC365-1032-4 (4) WAS (2). AC365-1032-3 (3) WAS (1). AN3-4A (10) WAS (6). AN960-AL10 (10) WAS (6). -5 K1288 X 7/64 WAS K1288 X 6 1/2. ON FACE - SHORTENED -5 ADDED -6 (1 REQ'D) NEG. WT. CHG.	4-11-42	
L	IN 5/16 FOR -6 REPLACED "K1288 X 8 1/2, AL AL EXT. 24ST-T." WITH "Y-6-A17T X 8 1/2" FOR -5 REPLACE "K1288 X 7 3/64, AL AL EXTR. 24ST-T" WITH "Y-6-A17T X 7 3/64" FOR -6 REPLACED "K6401 X 3/8 AL AL EXT. 24ST-T" WITH "028 X 1 3/8 X 11 3/8, 24ST ALCLAD SHT. QQ-A-362 COND. T" ON FACE OF -6 REPLACED "OPEN" WITH "NOTED" AT -6 REPLACED "OPEN TO 102°" AND CHG. RAD.	4-14-42	
M	IN 5/16 AT -4 REPLACED "Y-6-A17T X 8 1/2" WITH "NOTED" AT -5 REPLACED "Y-6-A17T X 7 3/64" WITH "NOTED" AT -6 REPLACED "028 X 1 3/8 X 11 3/8, 24ST ALCLAD SHT. QQ-A-362 COND. T" WITH "NOTED" ON FACE, ADDED MATERIAL NOTES 1, 2, 3.	4-23-42	

1" DIA. HOLE THRU SKIN

1 13/16

℄ SHIP

AN3-4A (4)
AC365 F1032 (4)
AN960 AL10 (4)

USE WITH -4 & -5

SKIN (REF.)

(6) (M) AN210-2A

5/16

3/8 (REF.)

1 7/16

3/16

72°

(-4) AN3-4A
AC365-1032
AN960 AL10
10 PLACES

1 11/32 ± 1/32 (RADIAL)

3 5/8

(5) (L) 7 5/8 (TRUE) FOR -5 ONLY

8 3/8 (TRUE) FOR -4 ONLY

60 5/16 R

(M)

LINE DRILL #10 (.193)
AN3-12
AN960-10
AN310-3
AN380-2-2

LINE DRILL 1/8 DIA.
AN392-2?
AN380-2,2
Q7102-A4
LOCATE ON INSTALL.

AN442-D3 (2 PLACES) E'S'K TO BE IN 28C2053 AS SHOWN. LOCATE ON INSTALL. AFTER GUARD IS PROPERLY ALIGNED WITH CABLE.

-6 (REF.)

19/32

6 7/32

-6 (REF.)

-5 (REF.)

2/8

3/8

28C2053

-4 (REF.)

℄ BULKD #5

TO BE HELD

21/32

FINISH -
Z - ANODIZE
P-P-27 PRIMER
GP - GREEN PRIME

C.#91876
C.#70496

ASSY. DASH NO.	MODEL	NEXT ASSY.	REQ.
-5 MV	28C5000	AN392-2?	
-5 ME	28C5000	AN380-2,2	
-5 MC	28C5000	AC365-1032	
-5 MA	28C5000	AN310-3	
PBY-5B	28C5000	AN210-2A	
PBY-5	28C5000	AN3-12	
PBY-5	28C5000	AN3-4A	
PBY-4	28C2000		
PBY-3	28C2000	AC365-F1032	
PBY-2	28C2000	28C2053	

REQUIREMENTS PER AIRPLANE

REPLACES 28C2076 (3-2-42) for 11-23-42 .36 CALC WT.

REPLACED BY 28C2076 @ 5125 ACT. WT.

LAID OUT BY DRAFTING GROUP | SCALE 1 Y3 2 6 1/2° | 12"=1'-0"

STAMP PART NUMBER WHERE SHOWN

PART No.	STOCK	MATERIAL	SPEC.	-0	-2	-3
Q7102-A4				4		
AN960-AL10				4		
AN960-10				1	1	1
AN442-D3				2	2	2
AN392-2?				1	1	1
AN380-2,2				2	2	2
AC365-1032				4	4	4
AN310-3				1	1	1
AN210-2A				1	1	1
AN3-12				1	1	1
AN3-4A				4	4	4
AC365-F1032				4		
28C2053				1		
-6	NOTED	NOTED	NOTED	1		
-5	NOTED	NOTED	NOTED		1	
-4	NOTED	NOTED	NOTED			1

PARTS LIST PER ASSY.

AC		AN LAY					
NAVY DONE	3P 26P	11-23-42				LCW	R
HEAT TREAT	FINISH	DRAFT	CHECK	STRUCT	MAT	APPROV	ENG

NAME INSTALLATION - AILERON TAB CONT. - BLKH'D. #5 - UPPER BRACKET

CONSOLIDATED AIRCRAFT CORP. SAN DIEGO, CALIF.

OPP HAND

DWG D- 28C2076

SIZE

28C2076 R

102°
3/32 R
3/4
3/4
DETAIL OF -6

VIEW LOOKING FORWARD
INSTALL ON PORT SIDE ONLY

MATERIAL NOTES:

1.- MATERIAL FOR -4 MAY BE:
(A) Y-6-A17T x 8 1/2, OR
(B) K1288 x 8 1/2, AL. ALLOY EXTR, SPEC. QQ-A-354-T.

2.- MATERIAL FOR -5 MAY BE:
(A) Y-6-A17T x 7 3/64, OR
(B) K1288 x 7 3/64, AL. ALLOY EXTR, SPEC. QQ-A-354-T.

3.- MATERIAL FOR -6 MAY BE:
(A) .072 x 1 3/8 x 7/8, 24ST ALCLAD, SPEC. QQ-A-362-T, OR
(B) K5401 x 7/8, AL. ALLOY EXTR, SPEC. QQ-A-354-T.

LET	ALTERATION	DATE	BY
L	PATTERNED PART CHANGED TO NO.		
	DATE WITH CREATION OF -28 &		
	-27 -23 -24 ADDED AT REQ. OF ARMY.		
	AIRPLANE BROUGHT UP TO DATE		
M	ADDED DIMS. "B" FOR PARTS		
	-16 & -17. REPLACED -27 AND		
	ASS'Y FOR -11 ASS'Y WITH		
	-26 SUB ASS'Y. CANCELLED -27		
	SUB ASS'Y. ADDED NOTE.	9-26-44	
N	"5/32 DIA. ---- SPEC. ANRR-C-43" WAS		
	"3/32 DIA FLEX (7x7) STEEL CABLE SPEC.		
	REES. (PREFORMED)", IN NOTE 1 SEE		
	WAS 28# & ADDED TO NOTE: "WHICH IS		
	60% OF RATED STRENGTH." TO NOTE 2.		
	ADDED "SPEC. AMER. --- SPEC. SAE"	4-28-44	
P	IN NOTE (1) 442# WAS 552 (NOT CHG.)	2-3-47	
Q	CAC TE-65 (CAC TE-67 WAS Q6320-3 (SEE LETTER	11-26-47	
R	Q6320-3 WAS CAC TE-65 &		
	CAC TE-67 (NEG. VT. CHG.	2-20-48	

E.O. A14612
PBY-5A
28-5AMC
OA-10

E.O. #A33240

E.O. #41097

ADC 3385

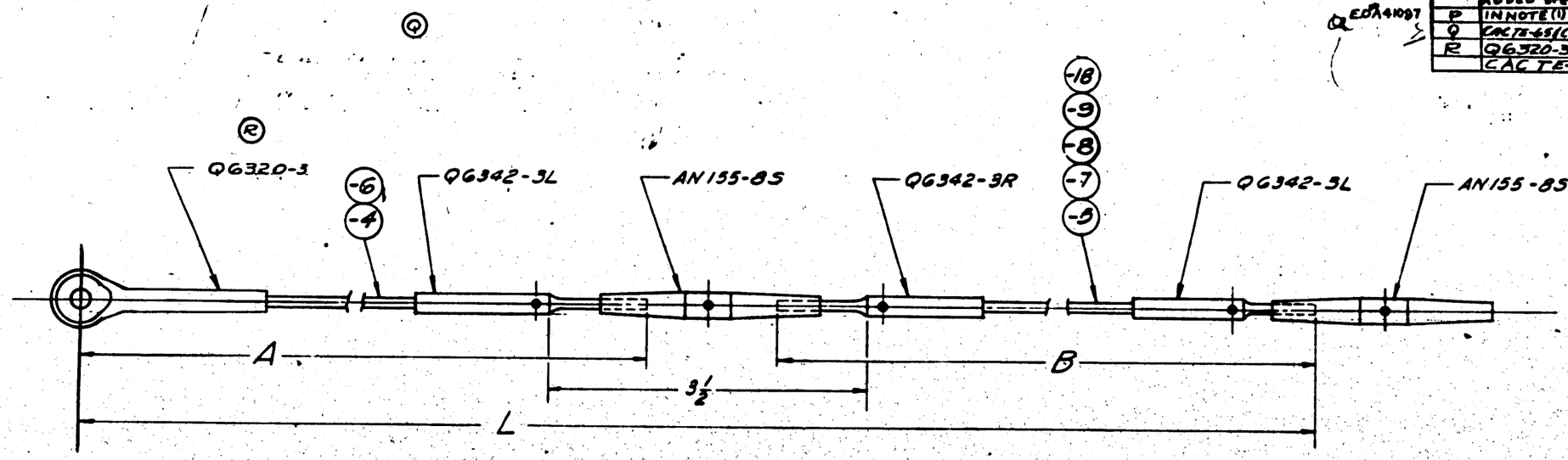

(18)(8)(4)(5) (9)(6)(7) (N) 5/32 DIA. CARBON TINNED (7×7) STEEL CABLE. SPEC. ANRR-C-43

NOTES:-

1. PRESTRETCH CABLE ASSY. TO ~~440~~ (N) 442# WHICH IS 60% OF RATED STRENGTH
2. CABLE TO BE COATED WITH PARALKETONE SPEC. RM61 TYPE B AS PER SPEC SR15C
3. # DETERMINE LENGTHS ON FIRST INSTALLATION & NOTIFY ENGINEERING
4. LENGTHS ARE GIVEN WITH 3 TH'DS. EXPOSED AT TURNBUCKLES.
5. SWAGE AS PER SPEC. T46B

PART NO.	LOCATION	A	B	L	
-17	OUTBOARD	58	305 1/4		(M)
-16	INBOARD	52	305 1/4		
-3	OUTBOARD	38	300 1/4	368 1/2	
-2	INBOARD	32	294 1/4	367	
-11	OUTBOARD	58	501 1/4		
-10	INBOARD	52	509 1/4		

-17	28SAMN	28C5750	1
-3	PBY-5B	28C5300	1
-3	PBY-5	28C6086	1
-2	PBY-5	28C5086	1
-17	PBY-5A	28C5564	1
-16	PBY-5A	28C5564	1
-17	PBY-5A	28C5700	1
-16	PBY-5A	28C5700	1
-16	XF-5AHN	28C5780	1
-2	PBY-5B	28C5300	1
-17	28-5AMC	28C6750	1
-16	28-5AMC	28C6750	1
-11	XPBY-5A	28C4025	1
-10	XPBY-5A	28C4025	1
-3	PBY-5	28C5000	1
-2	PBY-5	28C5000	1
-3	28-5MN	28C5300	1
-2	28-5MN	28C5300	1
-3	28-5ME	28C5300	1
-2	28-5ME	28C5300	1
-3	28-5MC	28C5800	1
-2	28-5MC	28C5800	1
-3	28-5MA	28C5800	1
-2	28-5MA	28C5800	1
-3	PBM-3A	28C8000	1
-2	PBM-3A	28C8000	1

c.91876
c.88476
c.70496
& c.77713
c.70496

ASSY. BASIC NO.	MODEL	NEXT ASSY.	QUAN.
REQUIREMENTS PER AIRPLANE			
REPLACES			CALC. WT.
REPLACED BY			ACT. WT.
+ 1/32	SCALE 12"=1'0"		
STAMP PART NUMBER WHERE SHOWN			

PART NO.	STOCK	MATERIAL	SPEC.	LH REQ.	RH REQ.	LH REQ.	RH REQ.	LH REQ.	RH REQ.	LH REQ.	RH REQ.	LH REQ.	RH REQ.
Q6320-3				1	1								
Q6342-3R						1	1						
Q6342-3L								1	1	1	1	1	1
-18												1	1
-9								1	1				
-8										1	1		
-7						1	1						
-6				1	1								
-5													
PARTS LISTED PER SUB-ASSY.				30	31	22	23	24	25	26			
AN155-8S				2	2	2	2	2	2				
-26 SUB ASSY.										1	1		
-25 SUB-ASSY.												1	1
-24 SUB-ASSY.								1	1				
-23 SUB-ASSY.						1	1						
-22 SUB-ASSY.				1	1								
-21 SUB-ASSY.						1	1						
-20 SUB-ASSY.				1	1			1	1	1	1		
PARTS LIST PER ASSY.				-8	-9	-10	-11	-12	-13	-14	-15		

A C		11-27-44	
NAVY	NOTE #2	A.H. LAU	
HEAT TREAT	FINISH	DRAFT	CHECK / STRUCT / MAT / APPROV / ENG.

NAME ASS'Y. - RUDDER FLAP CONTROL - AFT. CABLE

CONSOLIDATED AIRCRAFT CORP. SAN DIEGO, CALIF.

OPP. HAND —

DWG. D

DWG. 28C2079

28C2079

SUPPLIES & EQUIPMENT CLASSIFICATION			
LET	ALTERATION	DATE	BY
	[redacted]	2-6-38	[redacted]
	[redacted]	2-21-38	[redacted]

E.O. #A 50134

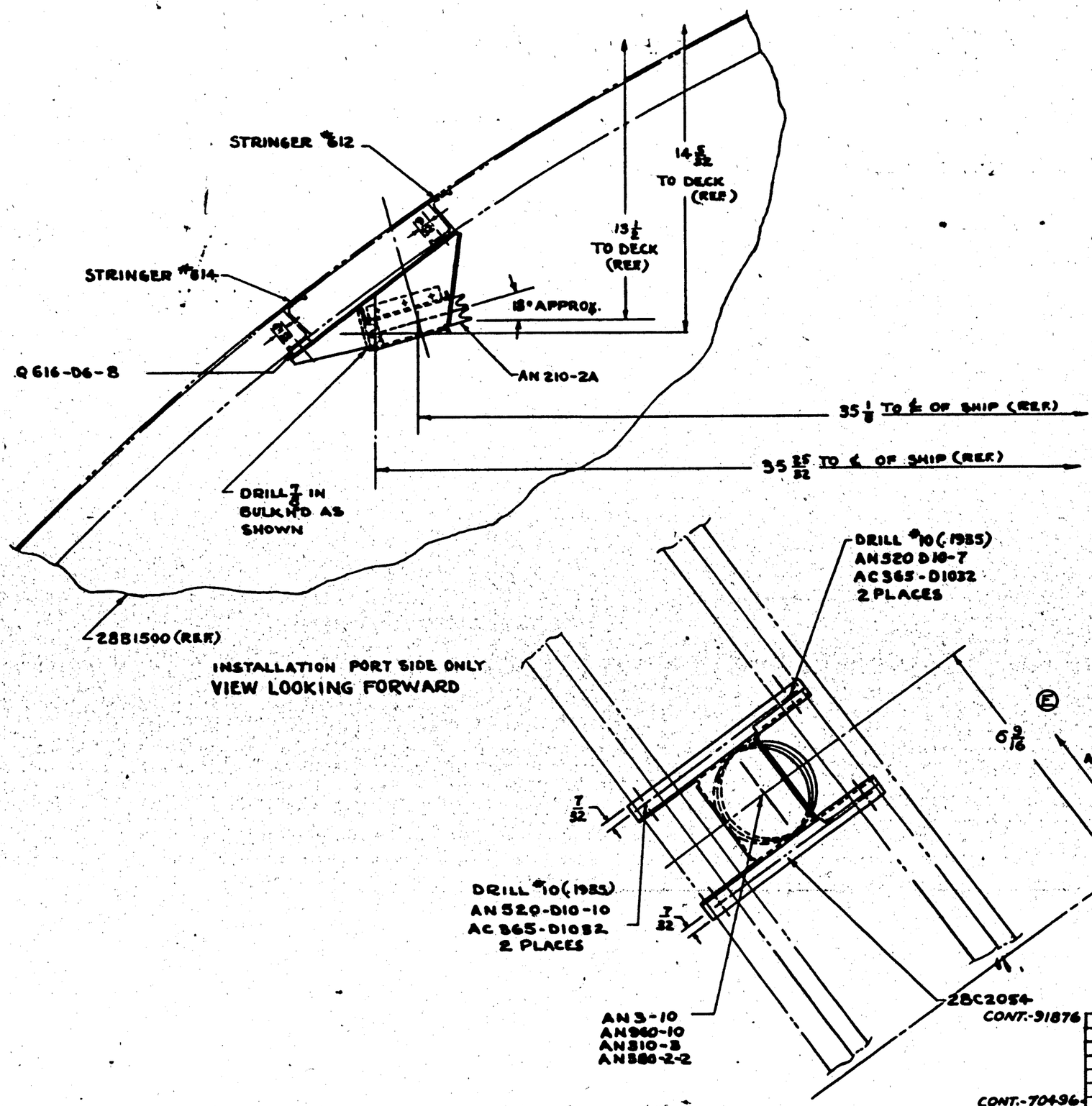

REPLACES	APPROVED	2-2-38 DATE
REPLACED BY	.25 GAGE WT.	ACT. WT.
1/32 LIMIT ON ENGINEERING UNLESS +	SCALE 6" = 1'-0"	

O. H.	MODEL	NEXT ASSY.	REQ.	ST'D PARTS	LH REQ.	RH REQ.	PART NO.	LH REQ.	RH REQ.	LH REQ.	RH REQ.	LH REQ.	RH REQ.	LH REQ.	RH REQ.
	PBY-5	28C5086	1												
	28-5MN	28C5500	1												
	28-5ME	28C5500	1	AN520-D10-10	2										
	28-5MC	28C5500	1	AN 380-2-2	1										
	28-5MA	28C5500	1	AN 960-10	1										
	PBY-5B	28C5500	1	AN 310-3	1										
	PBY-5	28C5000	1	AN 3-10	1		9816-D6-8	2							
	PBY-4	28C2000		AN 210-2A	2										
	PBY-3	28C2000		AN 520-D10-7	2										
	PBY-2	28C2000		AC 365-D1032	4		28C2054	1							

REQUIREMENTS PER AIRPLANE — MAT. — PARTS LIST PER ASSY.

A C				MILLS	CARLSON
NAVY NOTED	NONE	NONE	NONE	[redacted]	MAJOR R
MATERIAL	SPEC.	HEAT TREAT	FINISH	DRAFT	CHECK EXAM. ENG

CONSOLIDATED AIRCRAFT CORP. SAN DIEGO, CALIF.

NAME INSTALL. AILERON TAB CONT. LOW. PULLEY #5 B'KH'D

OPP. HAND

SIZE D 28C2080

(CONT'D)

K	WITH 50% LWR'S LEAD & 50% TALLOW SOLUTION* WT. CHG. NEG.	5-13-42	WILLIAMS	

LEV	ALTERATION	DATE	BY
M	RETRACED AND -10, -11, -12, -13, -14, -15 SUB ACC'YS. CREATED.	7-20-41	
P	[illegible]	8-6-41	
	ON DWG. NAF21062I-546D-GRN ADDED TO DWG.		
	& REPLACED NAF21062I-L46D-GRN FOR -14 & -15 SUB ASSYS.		
N	ON FACE OF DIM LEADER 173/8 (14'-5 1/8) DIM OF- PLACE WITH LETTER A & ADD DIM BLACK FOR -4 & -8	9-21-42	
Q	ADDED TOP VIEW, Q814M-6-36, AN23-28 & AN380-C2-2 REPLACE Q814M-6-36, AN23-29, & AN380-2-2 (2 REQ'D) ADDED Q7014M-13-.064 (WT. CHG. NEG.)	9-15-42	
R	-2, -3, -4, -5, -8 & -9 CARBON TINNED STEEL CABLE SPEC ANRR-C-43, WERE CORR. PREVT. STL. CABLE, SPEC. #2C11 CLASS B FOR -2 & -3 (EXTRA FLEX. STL. SPEC. 22C6 FOR -4 & -5, NOTE "2 WAS" CABLES... BEFORE & AFTER INSTALL'N		

E.O. A1460 PBY-5A 04-10

E.O. 435877

E.O. A33259

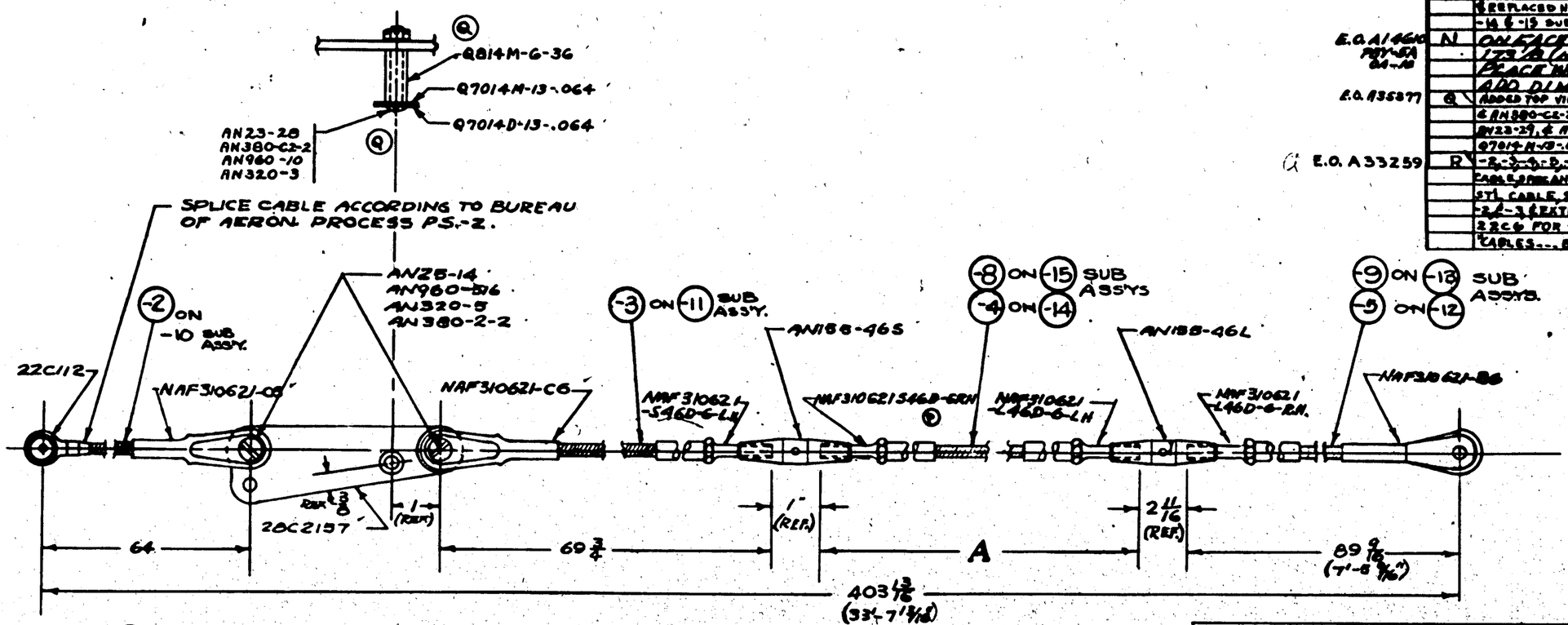

-2, -3
-4, -5
-8, -9
} (R) 3/16 X 7 X 19 CARBON TINNED STEEL CABLE, SPEC. ANRR-C-43.

NOTES:—
1. PRESTRETCH CABLE ASSEM. TO 2520# WHICH IS 60% OF RATED STRENGTH.
2. CABLES TO BE COATED WITH PARALKATONE SPEC. RM 61 TYPE B, AS PER SPEC. SR15C. (R)
3. DIMENSIONS GIVEN ARE WITH 3 THREADS EXPOSED AT TURNBUCKLES.
4. SWAGE IN ACCORDANCE WITH SPEC. T-46B AS APPLICABLE.

(N)

DASH NO.	"A"	
-4 (REQ)	173/8	(DIM. FOR PBY-5)
-8	143 1/8	(DIM. FOR PBY-5A & OA-10)

Q7014M-13-.064			
AN380-C2-2			
(P) NAF310621-546D-GRN			
NAF310621-C8	1	1	
NAF310621-546D-6-LH		1	
NAF310621-L46D-6-LH			1
(P) NAF310621-L46D-6-RH			
NAF310621-B6		1	1
22C112	1		
20C2157		1	
20C2084-9			
-8			1
-6		1	
-4			1
-3		1	
20C2084-2	1		
Q7014-D13-.064		1	
Q814M-6-36		1	
AN960-10		1	
AN320-3		1	
AN23-28		1	
AN960-516		2	
AN380-C2-2		2	
AN320-6		3	
AN25-14		2	
PARTS ON SUB ASSYS	-10	-11	-12 -13 -14 -15
AN188-46R	1	1	
AN188-46L	1	1	
-15		1	
-14	1		
-13		1	
-12	1		
-11	1	1	
20C2084-10	1	1	
-9			

ASSY. DASH NO.	MODEL	NEXT ASSY.	QTY.
-7	PBY-5A	28C003	1
-0	PBY-5	28C003	1
-0	PBY-4	28C003	1
-0	PBY-3	28C003	1
-0	PBY-2	28C003	1

C.-#70496 & 77713
C.-#70496

REQUIREMENTS PER AIRPLANE

REPLACES		3.05 CALC. WT.
REPLACED BY		ACT. WT.
UNLESS OTHERWISE SPECIFIED ± 1/16	SCALE 6" = 1'-0"	

STAMP PART NUMBER WHERE SHOWN

PART NO.	STOCK	MATERIAL	SPEC.	LH REQ.	RH REQ.	LH REQ.	RH REQ.	LH REQ.	RH REQ.	LH REQ.	RH REQ.
PARTS LIST PER ASSY.				-0	-7	-3		-4		-5	

AC							
NAVY NONE	NOTED #2	BROKE				LCH.	R.
HEAT TREAT	FINISH	DRAFT	CHECK	STRUCT	MAT	APPROV	ENG.

NAME CABLE ASSEMBLY-AILERON COCKPIT TO PANEL-PORTSIDE

OPP. HAND

CONSOLIDATED AIRCRAFT CORP. SAN DIEGO, CALIF.

DWG. SIZE D

28C2084

	A	B
-0	91 13/16	172 1/16
-9	89 1/4	143 3/8
-10	89 1/4	144 1/2
-13	91 13/16	172 1/16
-14	89 5/16	145 1/8
-15	89 5/16	145 1/16

Q R

LET	ALTERATION	DATE	BY
N	TRACED	7-30-41	[illegible]
P	REVISED A/M & CREATED	7-30-41	[illegible]
	SUB ASSEMS. -18-19-20		
	-21-22-23-24-25-26-27		
Q	ADDED DIMS. FOR -14 ASSY.		
	89 5/16 & 144 1/2.	9-26-41	[illegible]
R	'B' DIM FOR -14 ASSY. WAS 144 1/2		
	ADDED 'A' & 'B' DIM FOR -15 ASS'Y. NOW SHOWN	3-13-42	Stebbins
S	CREATED -54,55,56,57 ASSEM.		
	WT. INCREASE FROM A OR TO B, 2.5	9-15-42	Stebbins
T	CHG'D MAT'L ON -2,-3,-4,-5,-6,-7,-8,		
	-11,-16,& -17 TO CARBON TINNED STEEL		
	CABLE. SPEC. AN RR-C-43: -2,3 WAS COMM		
	RESIST. ST'L CABLE SPEC 49C11 CLASS B		
	& -4,5,6,7,8 WAS STEEL CABLE SAME SIZE		
	-11,16,& 17 MAT'L WAS ADDED (NO WT. CHG.)	11-18-42	JOE KELLY
U	-19 SUB ASS'Y AN23-28(1) WAS		
	AN23-29(1) Q814M-6-32(1) WAS		
	Q814M-6-36(1) ADDED Q7014-M13-.064		
	& VIEW A-A. . . . NEG WT. CHG.	6-3-43	SHEPARD

E.O. M14610 04-10, PBY-5A
E.O. A21164
E.O. A29038
E.O. M31663
SEC 3502 3562
CO A35820

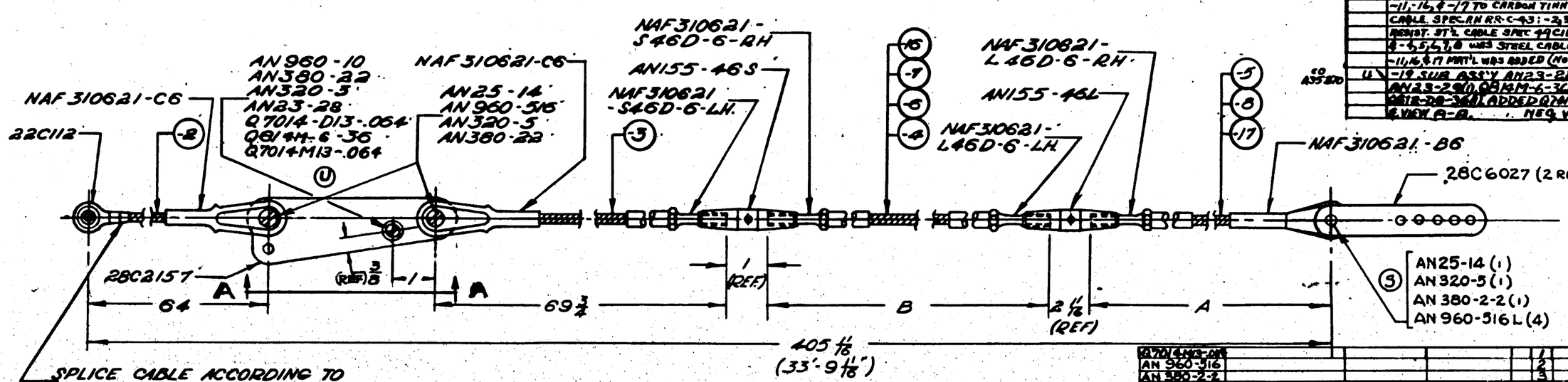

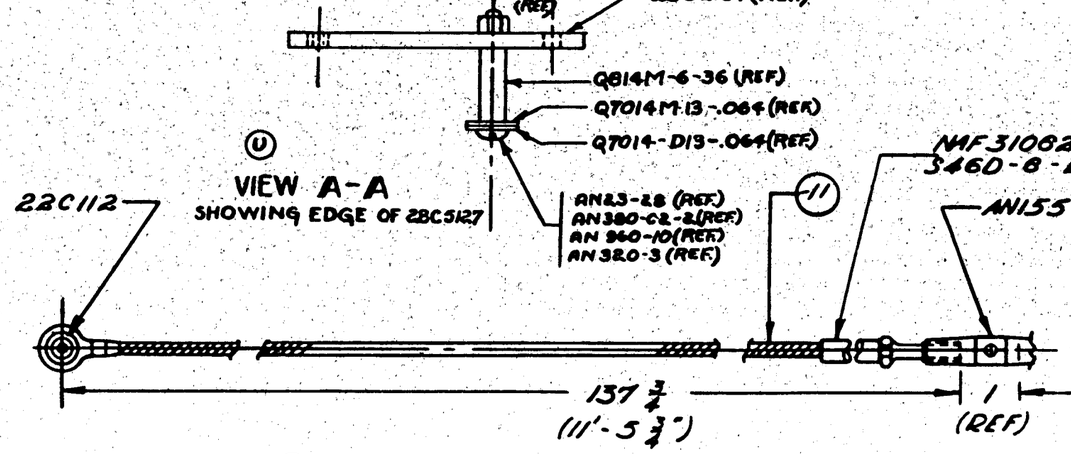

⑦ -2 -3 -4 -5 -6 -7 -8 -11 -16 -17 3/16 DIA. x 7 x 19 EXTRA FLEX CARBON TINNED STEEL CABLE SPEC. AN RR-C-43 (PREFORMED)

NOTES:-
1. PRESTRETCH CABLE ASSEM. TO 2320.# WHICH IS 60% OF RATED STRENGTH.
2. CABLES TO BE COATED WITH PARALKATONE SPEC. RM61 TYPE "B" AS PER SPEC. SR15C.
3. DIMENSIONS GIVEN ARE WITH 3 THREADS EXPOSED AT TURNBUCKLES.
4. SWAGE SPEC. -T-46a AS APPLICABLE

ASSY. DASH NO.	MODEL	NEXT ASSY.	REQ.
-57	28-5AMN	28C003	1
-56	PBY-5A	28C003	1
-55	PBY-5B	28C003	1
-54	PBY-5	28C003	1
-15	PA-5AMC	28C003	1
-14	PBY-5A	28C003	1
-13	28-5MA	28C003	1
-13	MF MC MN	28C003	1 REQ
-0	PBY-5	28C003	1
-0	PBY-4	28C003	1
-0	PBY-3	28C003	1
-0	PBY-2	28C003	1

REQUIREMENTS PER AIRPLANE

REPLACES — 3.05 CALC. WT.
REPLACED BY — ACT. WT.
± 3/16 — SCALE 6" = 1'0"
STAMP PART NUMBER WHERE SHOWN

CONTRACT #8547 & ON
CONTRACT #8176 & ON
CONT.# 70496 & 77718
CONT.# 70496

PART NO.	STOCK	MATERIAL	SPEC.
Q7014-M13-.064			
AN 960-516			
AN 380-2-2			
AN 320-5			
AN 25-14			
AN 23-28			
-17			
-16			
-11			
-8			
-7			
-6			
-5			
-4			
-3			
-2			
Q7014-D13-.064			
Q814M-6			
28C2157			
22C112			
NAF310621-C6			
NAF310621-S46D-6LH			
NAF310621-S46D-6RH			
NAF310621-L46D-6LH			
NAF310621-L46D-6RH			
NAF310621-B6			
AN960-10			
AN320-3			
PARTS LISTED ON SUB ASS'Y			
AN960-516L			
AN380-2-2			
AN320-5			
AN25-14			
28C6027			
AN155-46L			
AN155-46S			
-27			
-26			
-25			
-24 SUB ASSYS.			
-23			
-22			
-21			
-20			
-19			
-18			

	-18	-19	-20	-21	-22	-23	-24	-25	-26	-27
	1	2	3	2	2	1				
	·	4	·	4	·	4	·	4	·	·
	·	1	·	1	·	1	·	1	·	·
	·	1	·	1	·	1	·	1	·	·
	·	2	·	2	·	2	·	2	·	·
	1	1	1	1	1	1	1	1	1	1
	1	1	1	1	1	1	1	1	1	1
	·	·	·	·	·	·	·	·	·	1
	·	·	·	·	·	·	·	·	1	·
	·	·	·	·	·	·	·	1	·	·
	·	·	·	·	·	·	1	·	·	·
	·	·	·	·	·	1	·	·	·	·
	·	·	·	·	1	·	·	·	·	·
	·	·	·	1	·	·	·	·	·	·
	·	·	1	·	·	·	·	·	·	·
	·	1	·	·	·	·	·	·	·	·
	1	·	·	·	·	·	·	·	·	·

◆ PARTS LIST PER ASSY.

	-0	-54	-13	-55	-14	-56	-15	-57	-3	-10
	-	-	-	-	-	-	-	-	1	1
	1	1	1	1	1	1	1	1	2	3
	1	1	1	1	1	1	1	1	2	2
	1	1	1	1	1	1	1	1	2	2
	1	1	1	1	1	1	1	1	1	1

AC		1-9-36	CN					
NAVY NONE	NOTE #2	LAU	H.W.H.			L.C.W.	R.	
HEAT TREAT	FINISH	DRAFT	CHECK	STRUCT	MAT.	ARMAM.	ENG.	

NAME CABLE ASSEM. - AILERON COCKPIT TO PANEL - STB SIDE
OPP. HAND
CONSOLIDATED AIRCRAFT CORP. SAN DIEGO, CALIF.
DWG. SIZE D
28C2088

SUPPLIES & EQUIPMENT CLASSIFICATION			
LET	ALTERATION	DATE	BY
A	TRACED	2-2-38	
B	ADDED [illegible]	11-22-38	
C	DIM. 5 3/16 TO DECK WAS 4 9/16 (NO WT. CHG.)	6-30-42	
D	DIM. 1 11/16 WAS 1 1/2 ADDED DIM. 2 1/16 WT. CHG. NEG.	7-29-42	
E	REM. DIM. 5 1/16 & REPLACED WITH 4 9/16 ADDED (REF.) TO 3 3/4 DIM. NO WT. CHG.	8-29-42	

ADV-2 SHT. 246
ADV-3 SHT. 185
ADV-2 SHT. 17
E.O. A 46361

E.O. A 51799

GP-GREEN PRIME FINISH CODE

Z
B
C

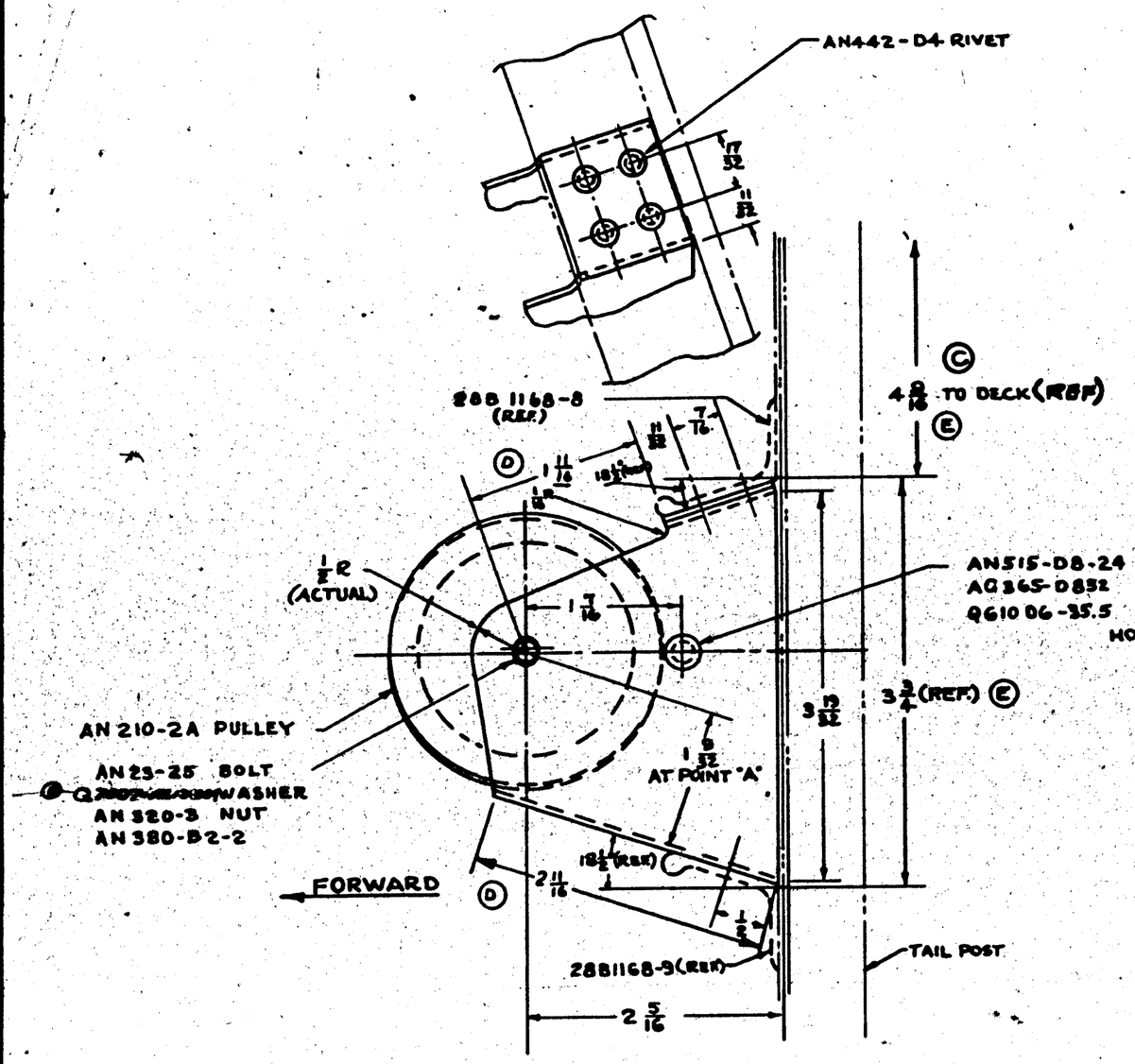

NOTE:
ALL BEND RADII TO BE 1/16.

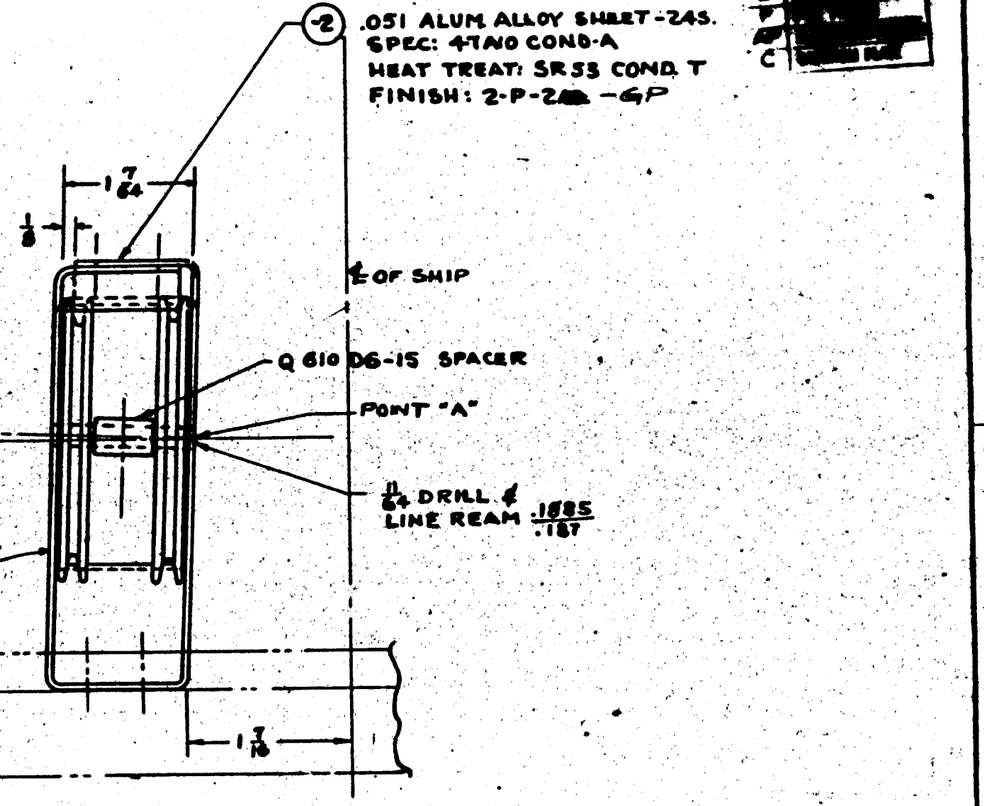

VIEW LOOKING FORWARD

C-88476
C-91876
C-70498

O.H.	MODEL	NEXT ASSY.	REQ.	ST'D PARTS	LH REQ.	RH REQ.	PART NO.	LH REQ.	RH REQ.	LH REQ.	RH REQ.	LH REQ.	RH REQ.	LH REQ.	RH REQ.
	PBY-5A	28C5500	1												
	PBY-5	28C5000	1												
	28-5AMW	28C5750	1												
	PBY-5B	28C5500	1												
	28-5AMC	28C5750	1												
	28-5MN	28C5500	1												
	28-5ME	28C5500	1												
	28-5MC	28C5500	1	AN515-D8-24	1		Q610D6-35.5	2							
	28-5MA	28C5500	1	AC365-D832	1		Q610D6-35.5	1							
	PBY-5A	28C5700	1	AN 320-3	1		Q610D6-15	1							
	PBY-5	28C5000	1												
	PBY-4	28C2000		AN 23-25	1										
	PBY-3	28C2000		AN 210-2A	1										
	PBY-2	28C2000		AN 442-D4			28C2069-2	1							

"REQUIREMENTS PER AIRPLANE | MAT. | PARTS LIST PER ASSY.

REPLACES [redacted] 2-2-38 DATE
REPLACED BY .20 SMA CALC. WT. ACT. WT.
LAID OUT ON DRAWING UNLESS OTHERWISE SPECIFIED 1/32 SCALE 12" = 1'-0"

A C				MILLS		C	
NAVY NOTED	NOTED	NOTED	NOTED	11-19-38		MILLS	R.
MATERIAL	SPEC.	HEAT TREAT	FINISH	DRAFT	CHECK	EXAM.	ENG.

CONSOLIDATED AIRCRAFT CORP. SAN DIEGO, CALIF.

NAME BRACKET – RUDDER FLAP CONTROL PULLEY – TAIL POST

OPP. HAND

DWG. NO. D. 28C2069

SUPPLIES & EQUIPMENT CLASSIFICATION			
LET	ALTERATION	DATE	BY
C	TRACED	2-6-38	[redacted]
D	"AN442-04" REPLCD BY "AN3-4A," AN365-1032, AN960-D10, 6 PLACES AND ADDITIONAL LISTING MADE IN B/M.	4-10-41	[redacted]
E	ON FACE OF DWG. REMOVED MATL. NOTE FOR-2.5% "Z AL. ALLAY EXTR. 245 ALCOA DIE #K9047 SPEC. 46A9 COND.T FINISH: Z-P-ZAL "Z" REPLACED WITH NOTE "Y-37-A20T FIN: Z-P-Z6P." REVISED REQ. /PLANE PER RELEASES NT CHKING	4-19-43	[redacted]

Ref. 28027 PBY-5

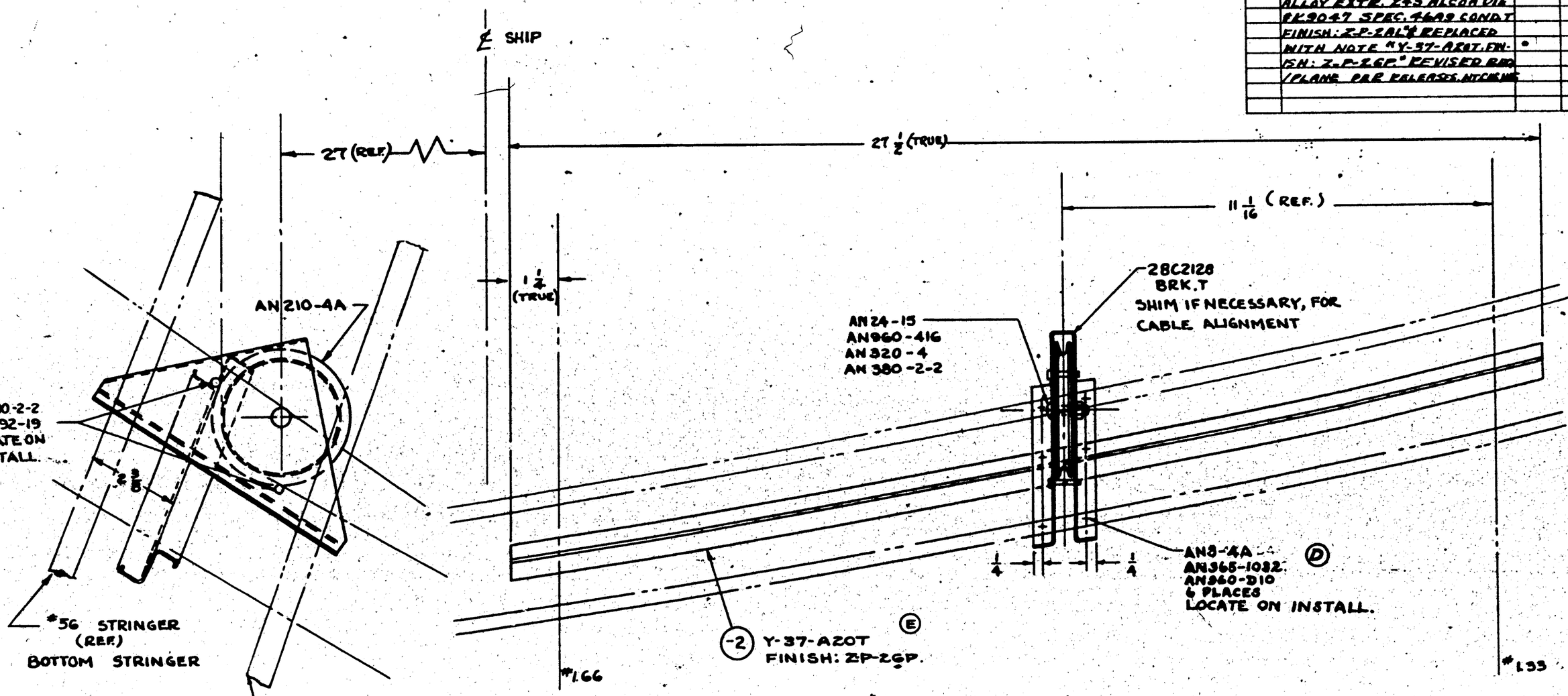

PORT SIDE
LOOKING OUTBOARD

28C2120 L.H. SHOWN
28C2120-1 R.H. OPPOSITE

O. H.	MODEL	NEXT ASSY.	REQ.	ST'D PARTS	LH REQ.	RH REQ.	PART NO.	LH REQ.	RH REQ.	LH REQ.	RH REQ.	LH REQ.	RH REQ.	LH REQ.	RH REQ.
-1	PBY-5	28C5000	1	AN3-4A	6	6									
	PBY-5	28C5000	1	AN365-1032	6	6									
-1	PBY-5	28C5000	1	AN960-D10	6	6									
	PBY-5	28C5000	1	AN392-19	2	2									
-1	PBY-4	28C2000		AN960-416	1	1									
	PBY-4	28C2000		AN380-2-2	3	3									
-1	PBY-3	28C2000													
	PBY-3	28C2000		AN 320-4	1	1	-2	1	1						
-1	PBY-2	28C2000		AN 210-4A	1	1	28C2128-1	1	1						
	PBY-2	28C2000		AN 24-15	1	1	28C2128	1							

REQUIREMENTS PER AIRPLANE | MAT. | PARTS LIST PER ASSY.

REPLACES	[redacted] 2-6-38 DATE						
REPLACED BY	.41 & .44 GALC. WT.	ACT. WT.					
1/32 UNLESS OTHERWISE SPECIFIED ±	SCALE 6" = 1'-0"						
[redacted]							
A C				LO-ST		CARBURET	
NAVY NOTED	NOTED	NONE	NOTED	A-N MCH		H.WR.	R
MATERIAL	SPEC.	HEAT TREAT	FINISH	DRAFT	CHECK	ENGR.	ENG

CONSOLIDATED AIRCRAFT CORP. SAN DIEGO, CALIF.

NAME INSTALL.- AILERON SERVO PULLEY BRK.T.- OUTBOARD

OPP. HAND NOTED

SIZE D | 28C2120

SUPPLIES & EQUIPMENT CLASSIFICATION			
LET	ALTERATION	DATE	BY
B	TRACED	2-9-38	

2881021 (REF)
KEEL TRUSS

A

7/16

12 EQUAL SPACES
APPROX. 1"

*28(.1405) DRILL
LOCATE ON ASSEM.
(A) AN-515-D6-6
AC-365-D632

6 7/16

AN960-416
WASHER

*F(.257) DRILL THRU.
AN 24-22
AN 960-416
AN 320-4
AN 380-2-2

1/4

B

AN 425-D4

*18(.169) DRILL THRU
QG10-D5-27
AN-515-D8-20
AC-365-D832

(-2) 1/4 x 5/8 x 2 1/2 ALUM. ALLOY SHEET-24S
SPEC: 47A10 COND. T
SHIM TO SUIT

AN442-D4

3/8

55/64 (REF.)

A

*1.66

*1.33

11 1/16 (REF)

3/16

3/4

A

JOGGLE 3/32

28C2090

13

5/16

2 3/16

1 15/16 +1/64 -0

AN210-4A

JOGGLE 3/32

3/4

(-3) 3/4 x 3/4 x 1/16 ALUM. ALLOY EXTR.
ALCOA DIE #K5401
(-4) SPEC: 46A9 COND. T

SECTION A-A

5/8

2

℄ PULLEY

4 1/4

1/16 R ALL CORNERS

VIEW B
SHOWING CUTOUT FOR PULLEY & GUARD

NOTE:
FINISH:-2,-3 & -4 Z-P-2AL

C.H.	MODEL	NEXT ASSY.	REQ.	ST'D PARTS	LH RH REQ.	PART NO.	LH REQ.	RH REQ.	LH REQ.	RH REQ.	LH REQ.	RH REQ.	LH REQ.	RH REQ.
				AN960-416	2									
				AN515-D8-20	1									
				AN515-D6-6	1									
				AN442-D4	13									
				AN425-D4	4									
				AN380-2-2	1									
				AC365-D832	1	QG10-D5-27	1							
PBY-5	28C5000	1		AC365-D632	1	28C2090	1							
PBY-4	28C2006			AN320-4	1	-4	1							
PBY-3	28C2005			AN210-4A	1	-3	1							
PBY-2	28C2004			AN24-22	1	-2	1							

* REQUIREMENTS PER AIRPLANE | MAT. | PARTS LIST PER ASSY.

REPLACES	APPROVED	DATE
		2-3-38
REPLACED BY	GALC. WT.	ACT. WT.
	.60 SHT	
LIMIT ON DIMENSIONS WHERE ±	SCALE	
1/32	6"=1'-0"	

C-70496

MATERIAL	SPEC.	HEAT TREAT	FINISH	DRAFT	CHECK	EXAM.	ENG.
AC				12-31-36			
NAVY NOTED	NOTED	NONE	NOTED			H.W.H.	R.W.G.

CONSOLIDATED AIRCRAFT CORP.
SAN DIEGO, CALIF.

NAME INSTALL.-CONTROLS-AILERON SERVO PULLEY-LOWER

OPP. HAND

DWG. D. 28C2123

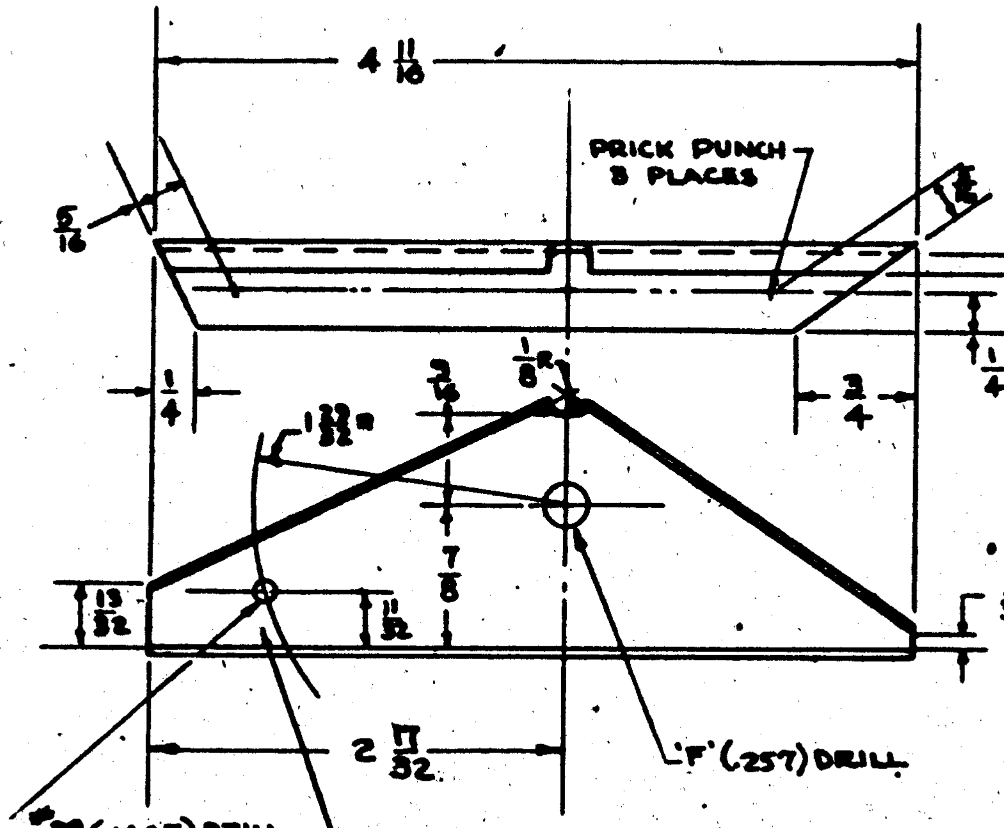

(-2) .040 AL. ALLOY SHEET-24S
SPEC. 47A10 COND. T
SCALE: FULL SIZE

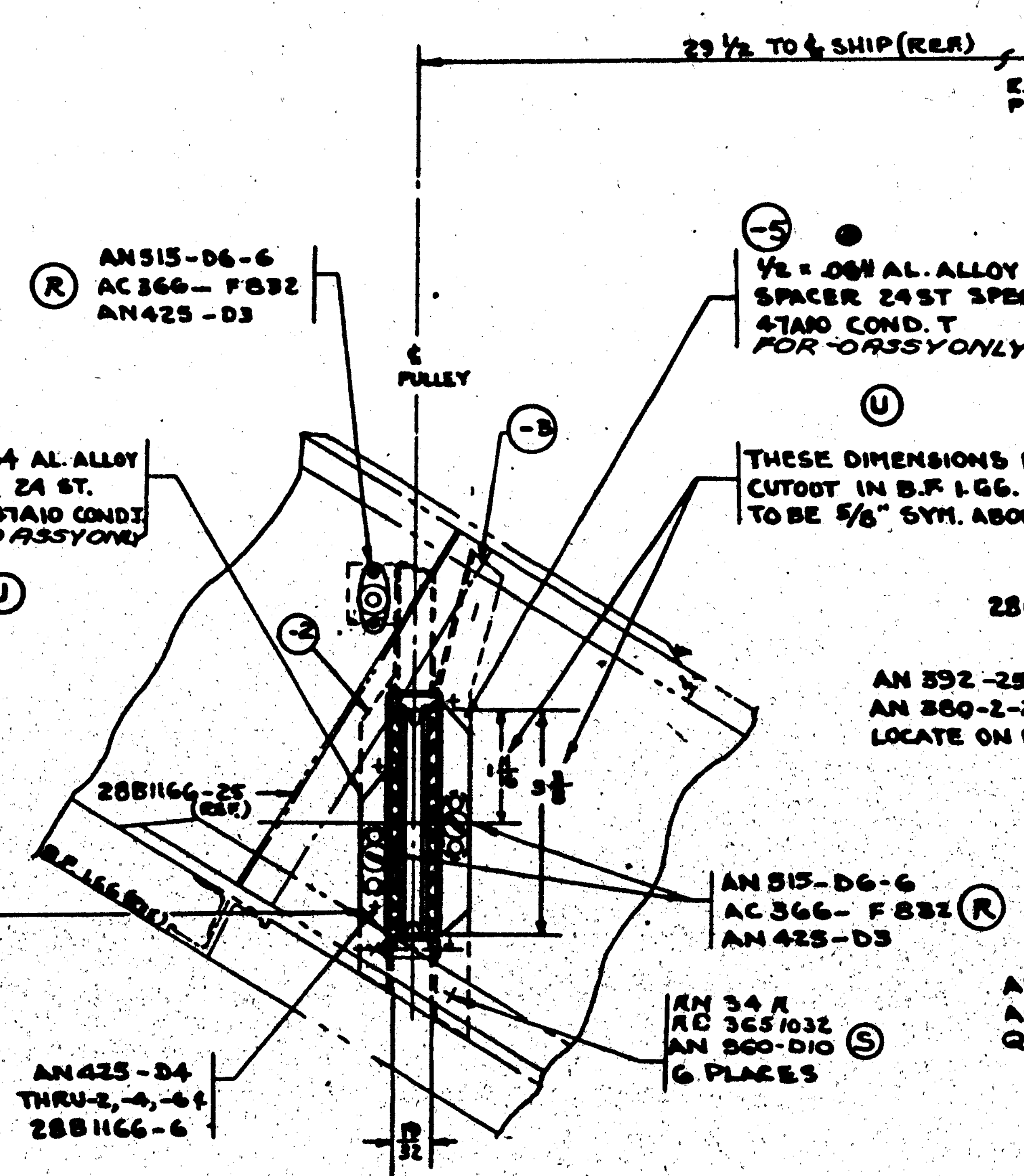

(-5) 1/2 x .064 AL. ALLOY SPACER 24ST SPEC. 47A10 COND. T *FOR -0 ASSY ONLY* E.O. A30528

(U)

(-4) 1/2 x .064 AL. ALLOY SPACER 24 ST. SPEC: 47A10 COND. T *FOR -0 ASSY ONLY*

(U)

THESE DIMENSIONS FOR CUTOUT IN B.F. 1.66. WIDTH TO BE 5/8" SYM. ABOUT ℄ OF PULLEY.

(-6) 1/2 x .030 AL. ALLOY SPACER 24 ST SPEC: 47A10 COND. T TO EXTEND FULL LENGTH OF FLANGE OF -2 PBY-2 ONLY

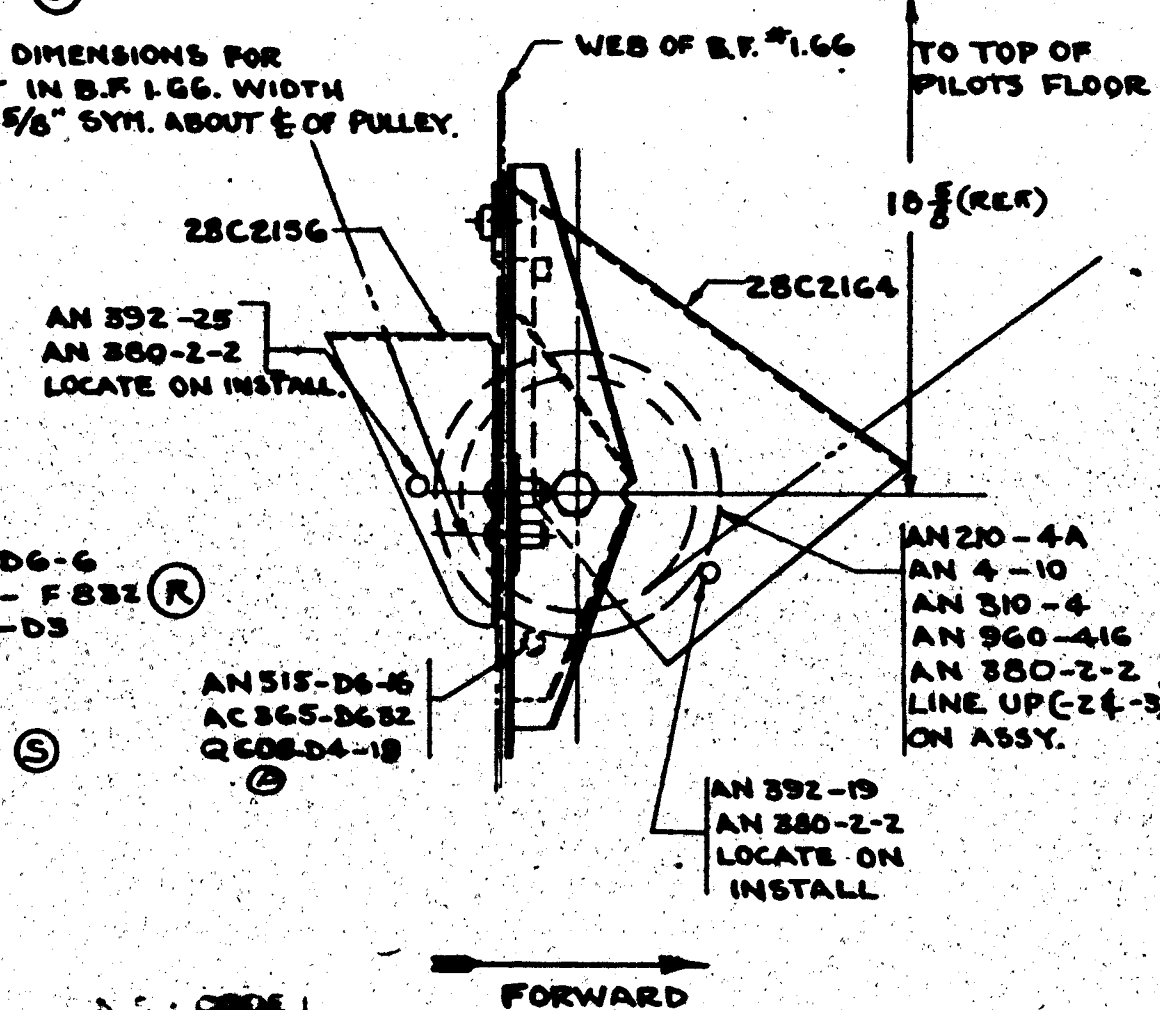

VIEW LOOKING FORWARD
PORT SIDE
SCALE: 6" = 1'-0"

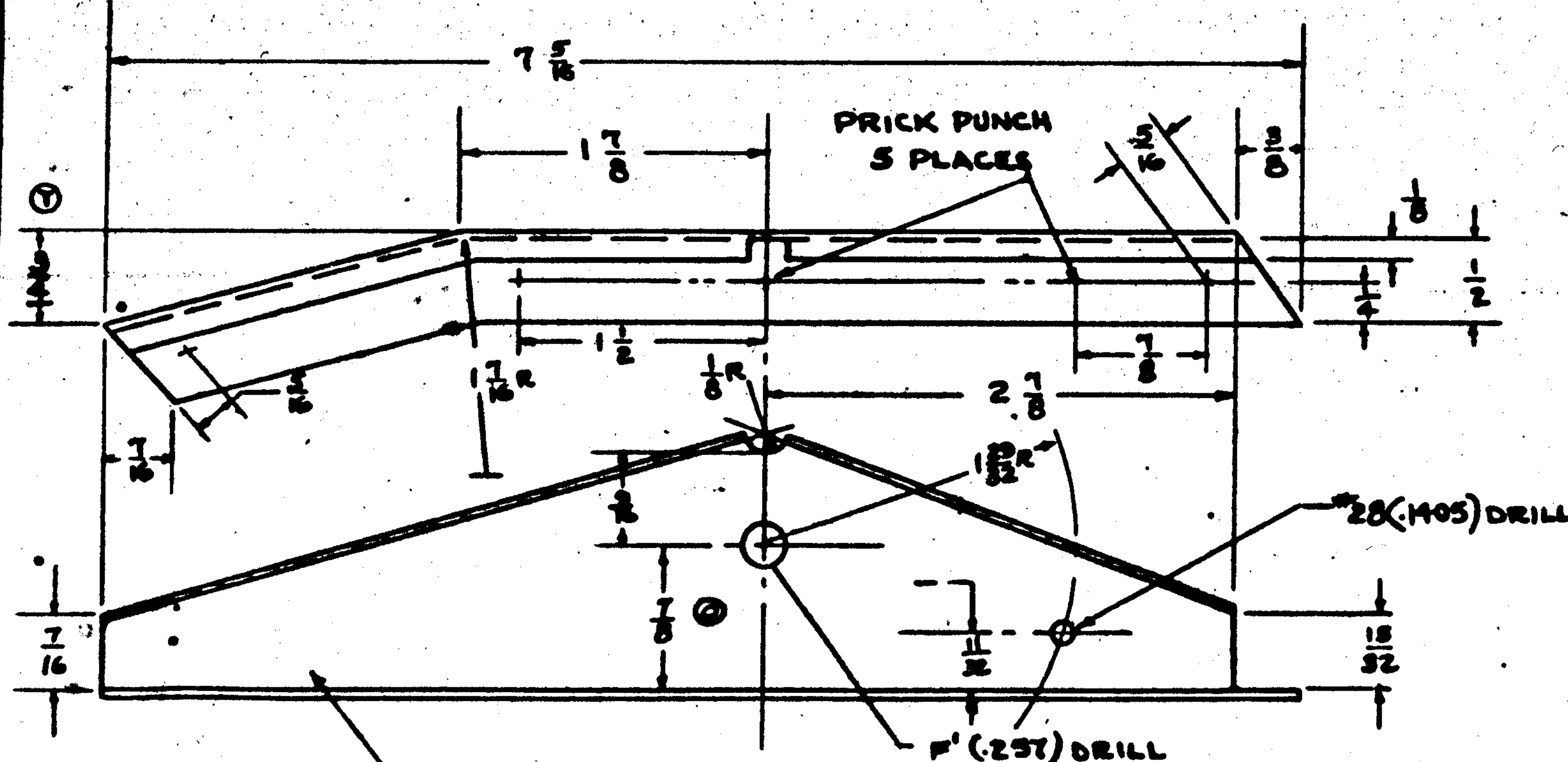

(-3) .040 AL. ALLOY SHEET 24S
SPEC: 47A10. COND. T.
SCALE: FULL SIZE.

NOTES:
ALL BEND RADII (-2 & -3) TO BE 1/16" UNLESS OTHERWISE NOTED.
FINISH (-2, -3, -4, -5, -6) Z-P-2AL BEFORE ASSY.

LET	ALTERATION	DATE	BY
O	TRACED.	[illegible]	[illegible]
P	Q608-D4-19 WAS Q610-D4-19	6-5-[illegible]	[illegible]
Q	(5) WAS 1/2 x .091; 7/8 DIM. [illegible]		
	-3 CHGD FROM [illegible]	6-8-39	[illegible]
R	AC366-F832 WAS AC366DF632, ALSO CHANGED ON B/M	4-21-41	[illegible]
S	REMOVED AN442-D4(6) ADDED TO B/M AND TO PREC. AN34R, AN365-1032, AN960D10 (6 EACH REQ)	4-21-41	[illegible]
T	CHANGED DIM TO 3/16 WAS 9/16	8-1-41	[illegible]
U	ADDED NOTE TO -4 & -5 ON FACE: "FOR -0 ASSY. ONLY" CREATED -50 ASSY. ADDED REQ'S PER AIRPLANE. CHG'S IN B/M.	1-13-42	JONES
V	REPLACED -50 ASSY & REQ FOR C#91876 WITH -0 ASSY & REQ NO WT. CHG.	4-3-42	[illegible]

N.S. CODE [redacted]

	DASH NO.	MODEL	NEXT ASSY.	REQ.
C# 88476 →	-50	PBY-5A	28C4884	
C# 91876 →	-0	PBY-5	28C5085	
C# 70496 SHIP #26-167 →	-50	PBY-5	28C5100	
LAST 33 SHIPS ON 70496 & C-77713 →	-50	PBY-5A	28C5700	
C# 70496 SHIP #1-#25 →	-0	PBY-5	28C5000	
	-0	PBY-4	28C2000	
	-0	PBY-3	28C2000	
	-0	PBY-2	28C2000	

REQUIREMENTS PER AIRPLANE

ST'D PARTS	REQ.	PART NO.	-0 REQ.	-50 REQ.
AN34R	6			
AC365-1032	6			
AN960D10	6			
AC365-D632	1			
AN515-D6-16	1			
AN392-25	1			
AN425-D4	1			
AN380-2-2	3	Q608-D4-19	1	1
AN392-19	1			
AN515-D6-6	3			
AC366-F832	3			
AN425-D3	6	(PBY-2 ONLY) -6	1	1
—	1	28C2156	1	1
AN960-416	1	28C2164	1	1
AN442-D4	6	-5	1	
AN310-4	1	-4	1	
AN210-4A	1	-3	1	1
AN-4-10	1	-2	1	1

PARTS LIST PER ASSY.

REPLACES	APPROVED	DATE
	[redacted]	2-4-38

REPLACED BY	CALC. WT.	ACT. WT.
	.35 LBS.	

LIMIT ON DIMENSIONS UNLESS ± OTHERWISE SPECIFIED — SCALE 6" = 1'-0", 12" = 1'-0"

[redacted]

A C				DATE			
NAVY NOTED	NOTED	NONE	NOTED	3-1937		CHECKED	
MATERIAL	SPEC.	HEAT TREAT	FINISH	DRAFT HACK	CHECK	EXAM. H.W.A.	ENG. R.

CONSOLIDATED AIRCRAFT CORP.
SAN DIEGO, CALIF.

NAME: BRACKET INSTALL. CONTROLS S.B.A.E. ELEVATOR PULLEY

OPP. HAND

D 28C21[illegible]

SUPPLIES & EQUIPMENT CLASSIFICATION			
LET	ALTERATION	DATE	BY
C	TRACED	2-3-38	[illegible]

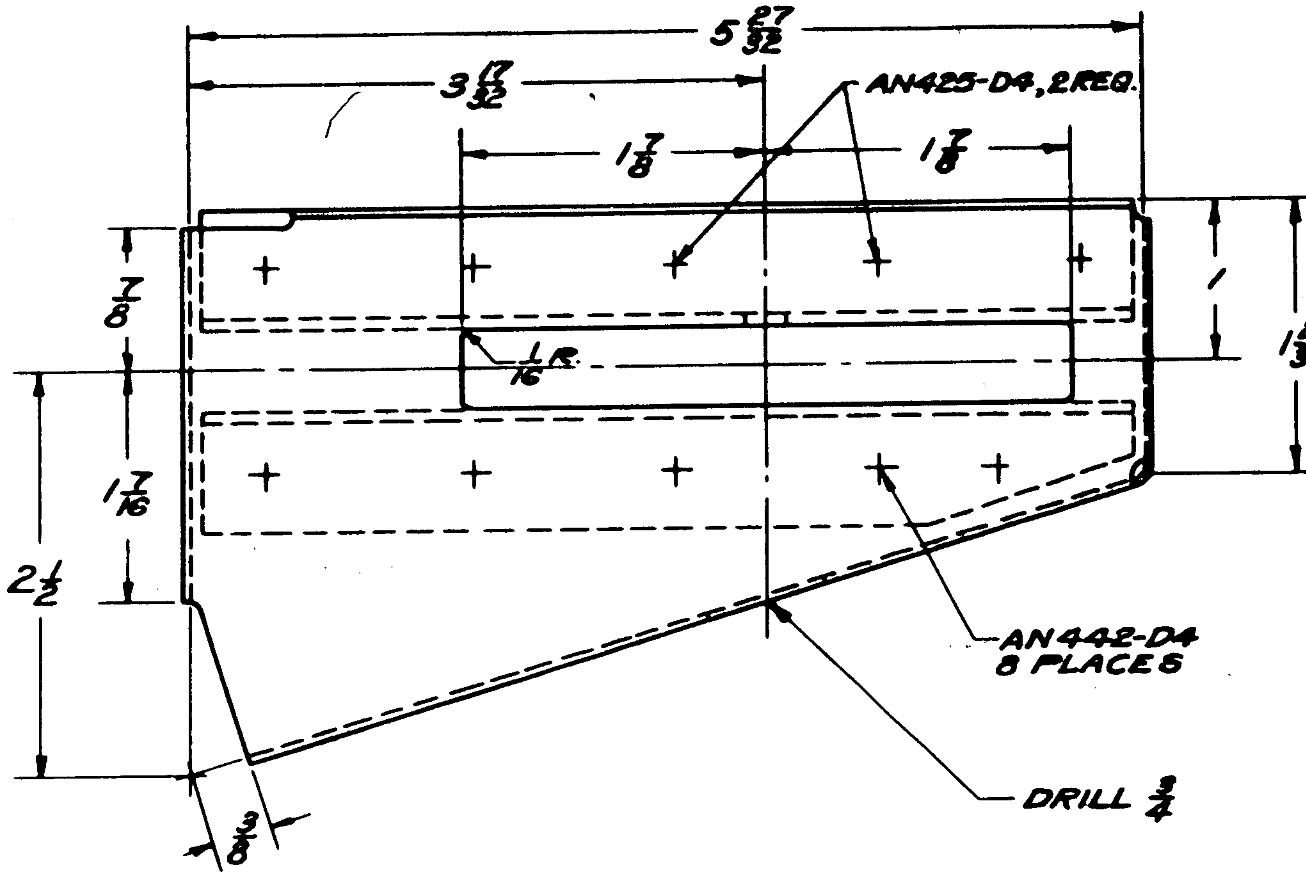

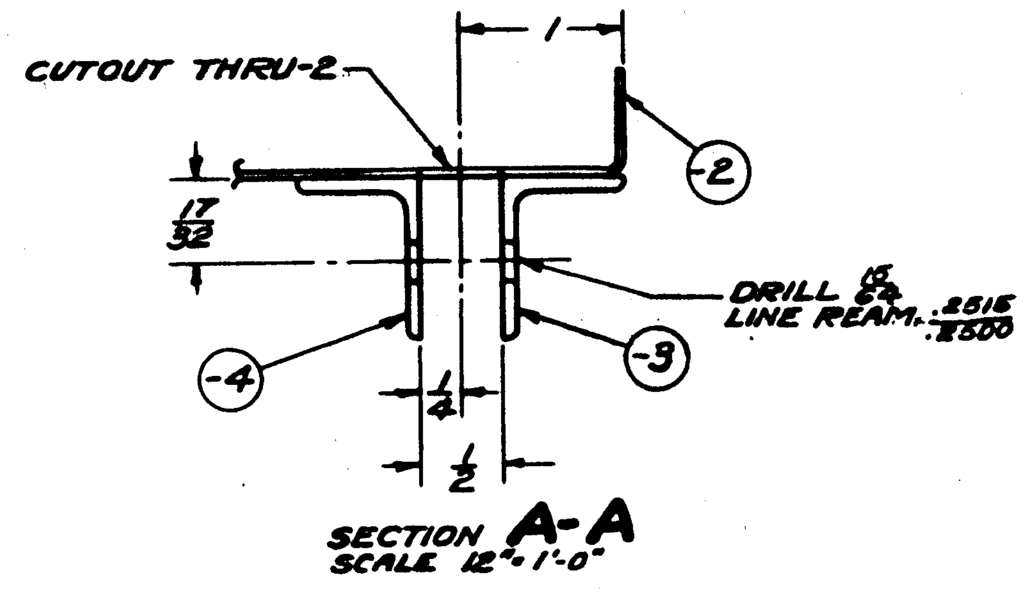

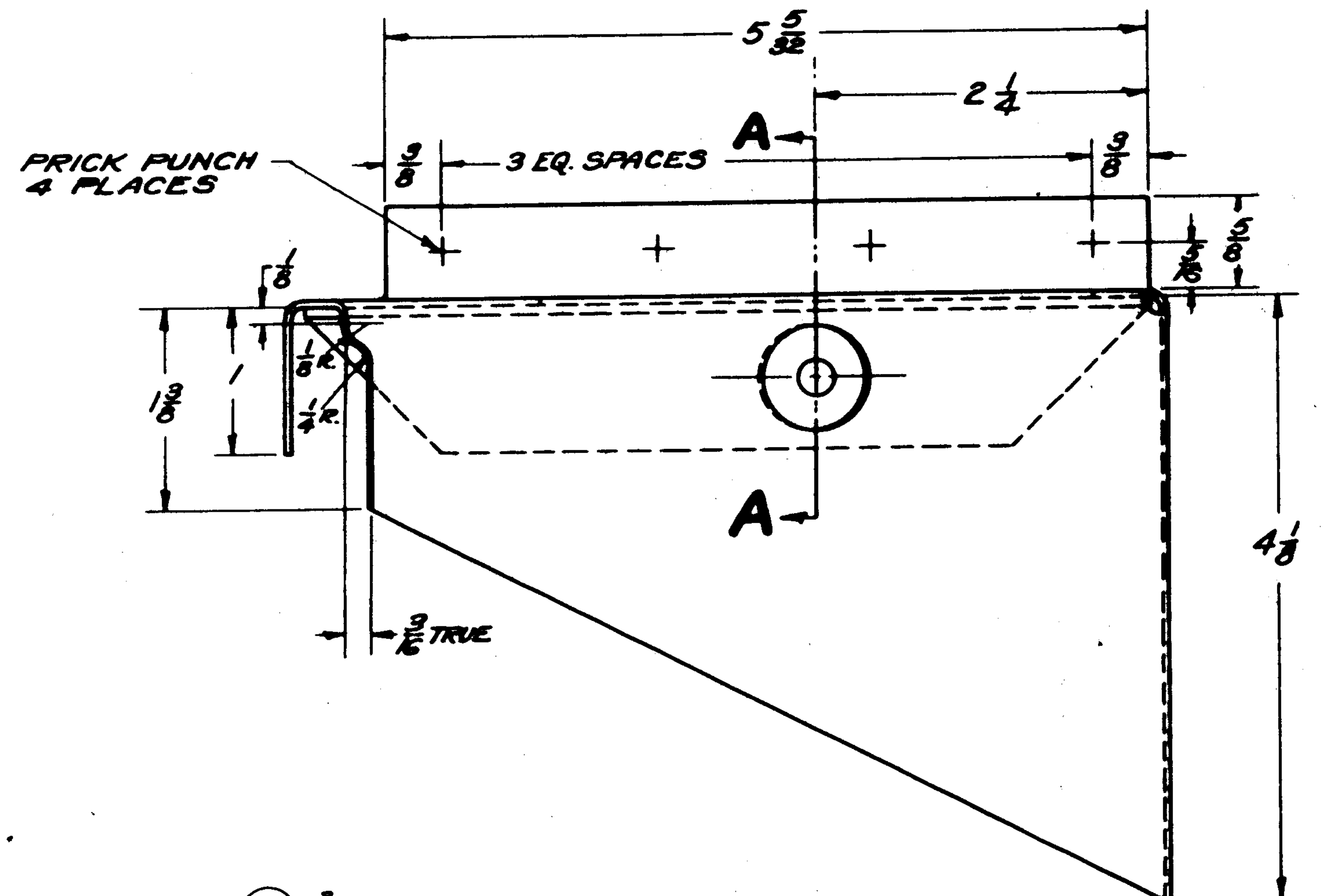

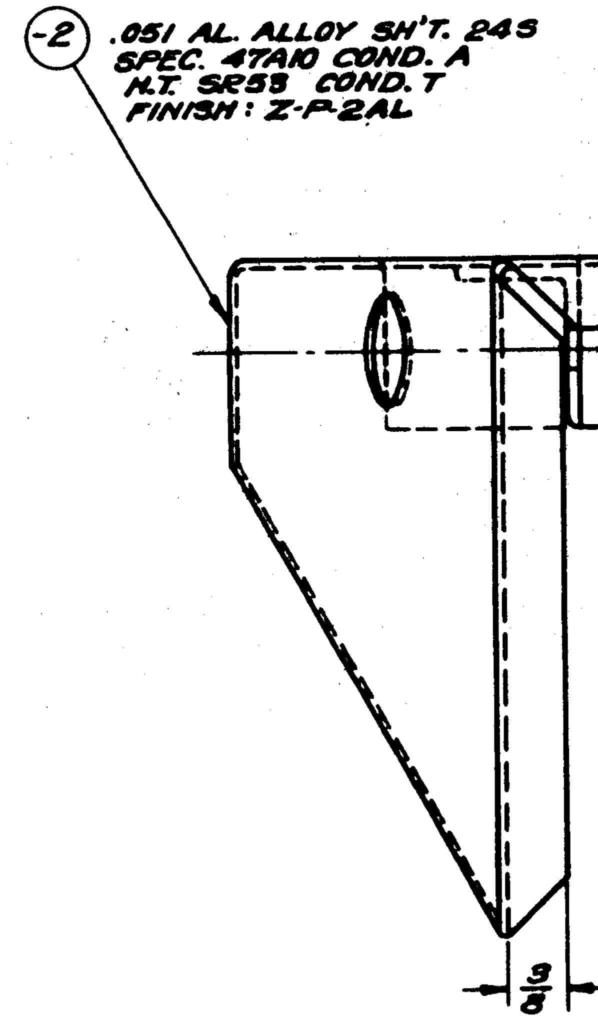

NOTE:- ALL BEND RADII TO BE 3/32 R.

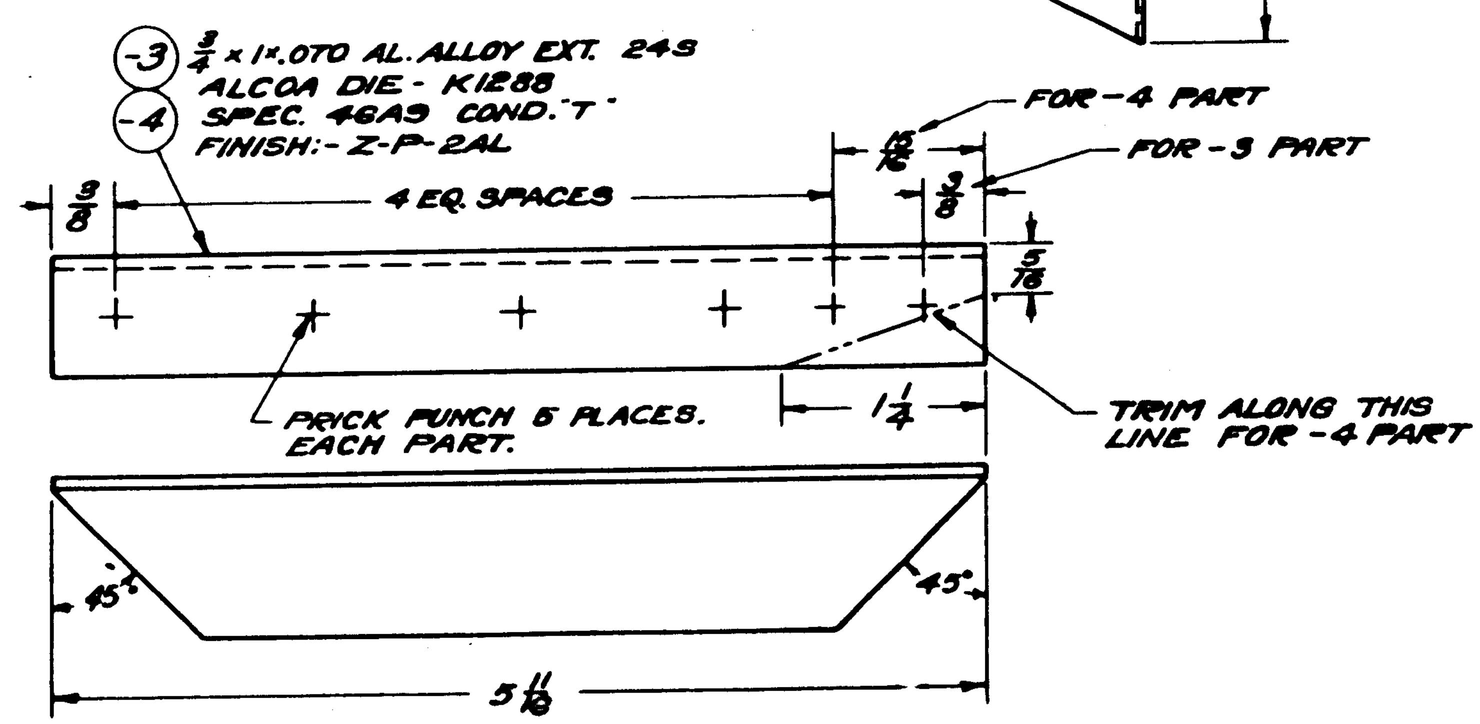

O. H.	MODEL	NEXT ASSY.	REQ.	STD PARTS	REQ.	PART NO.	REQ.
	PBY-4	28C2121				-4	1
	PBY-3	28C2121		AN442-D4	8	-3	1
	PBY-2	28C2121		AN425-D4	2	-2	1
REQUIREMENTS PER AIRPLANE				MAT.		PARTS LIST PER ASSY.	

REPLACES	[illegible] 2-3-38 (APPROVED / DATE)
REPLACED BY	.39 CALC. WT. / ACT. WT.
LIMIT ON DIMENSIONS UNLESS OTHERWISE SPECIFIED ±	12" = 1'-0" SCALE

[redacted]

A C				WEIR	CN.	H.W.K.	R
NAVY NOTED	NOTED	NOTED	NOTED	2-6-37			
MATERIAL	SPEC.	HEAT TREAT	FINISH	DRAFT	CHECK	EXAM.	ENG.

CONSOLIDATED AIRCRAFT CORP.
SAN DIEGO, CALIF.
STAMP PT. NO. WHERE SHOWN

NAME: BRACKET-AILERON SERVO PULLEY-AT PILOTS FLOOR.

OPP. HAND

DWG. SIZE D — 28C2131

SUPPLIES & EQUIPMENT CLASSIFICATION			
LET	ALTERATION	DATE	BY
C	TRACED	2-7-38	[illegible]
D	DIM. 1 3/8 WAS 1 1/4 ; ADDED	4-1-38	[illegible]
	DIM. 5/16 & TRIM NOTE	"	"
E	DIM 3/8 WAS 5/8	11-1-40	[illegible]

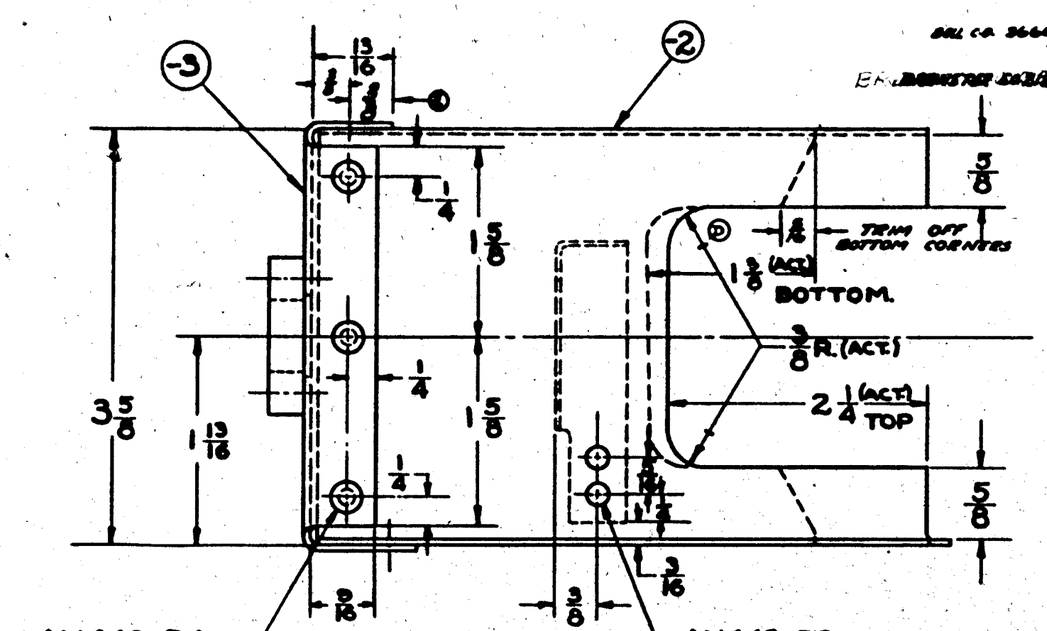

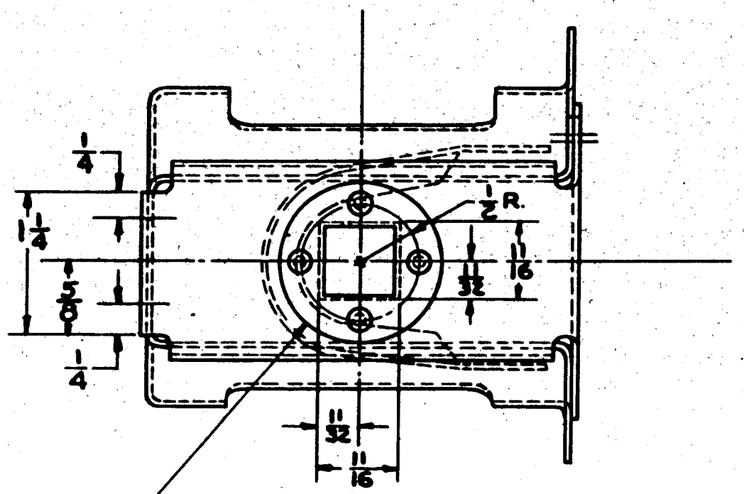

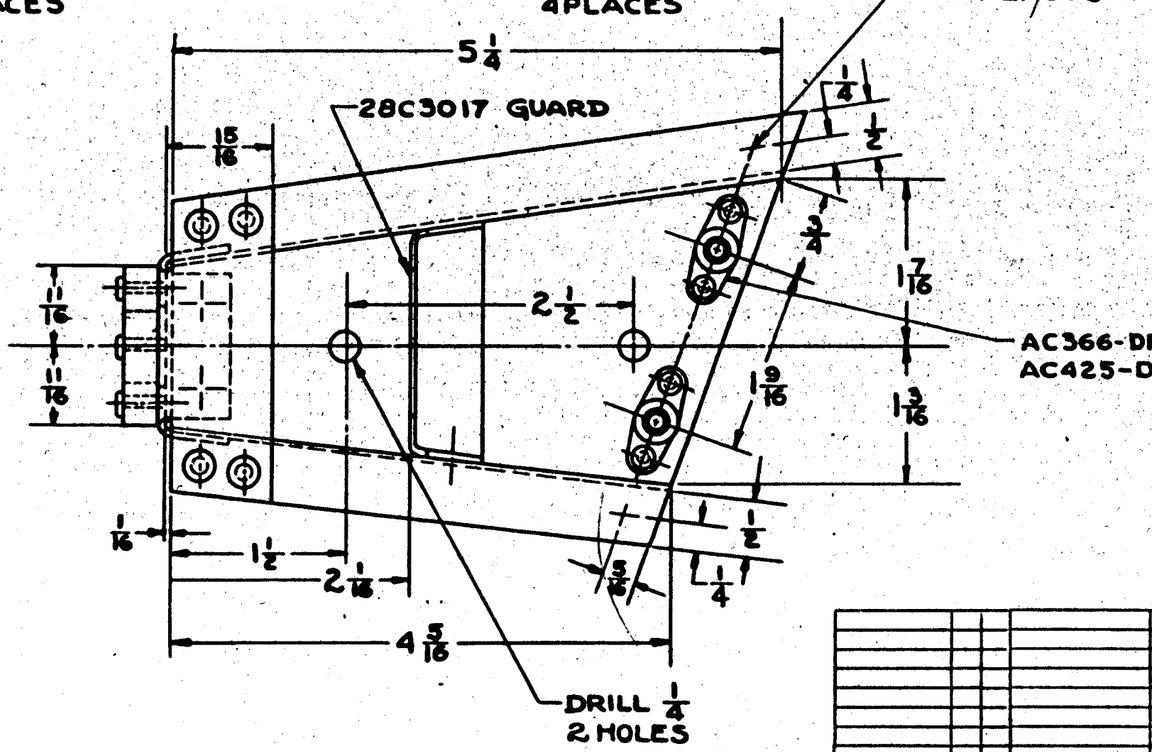

GP-GREEN PRIME

FINISH	
Z	[illegible]
P	[illegible]
AP	[illegible]
C	[illegible]

(-2) .040 AL. ALLOY SHT. 245 -
(-3) SPEC:- 47A10 COND "T"
FINISH:- Z-P-2 [illegible] GP

* AFTER 28C2051 IS USED UP

NOTE:-
ALL BEND RADII TO BE 1/16 R.

O.H.	MODEL	NEXT ASSY.	REQ.	STD PARTS	LH REQ.	RH REQ.	PART NO.	LH REQ.	RH REQ.	LH REQ.	RH REQ.	LH REQ.	RH REQ.	LH REQ.	RH REQ.
	PBY-5B	28C2050	1				28C3017	1							
	PBY-5A/5A	28C2050	1/1	AC366-DF832		2	28C2037	1							
	PBY-4	28C2050		AC425-D3		4									
	PBY-3	28C2050		AN442-D4		12	-3	1							
*	PBY-2	28C2050		AN442-D3		8	-2	1							

REQUIREMENTS PER AIRPLANE		MAT.	PARTS LIST PER ASSY.
AC			WEIR
NAVY NOTED	NOTED	NONE	NOTED
MATERIAL	SPEC.	HEAT TREAT	FINISH

DRAFT	CHECK	ENGR.	ENGR.
5-24-38		MERRITT	R.

REPLACES

REPLACED BY

APPROVED K.L.W. DATE 2-7-38

CALC. WT. .23 lb.

ACT. WT.

LIMIT ON DIMENSIONS DECIMALS ± 1/32

SCALE 12" = 1'-0"

[redacted]

CONSOLIDATED AIRCRAFT CORP. SAN DIEGO, CALIF.

NAME ASS'Y.-AILERON TAB CONT.-SOCKET GUIDE

OPP. HAND

SIZE D

28C3016

SUPPLIES & EQUIPMENT CLASSIFICATION			
LET	ALTERATION	DATE	BY
A	TIPPED	3-28-45	[redacted]
B	#0 WAS ST		
	COND. A WAS COND T		
	H.T. 3R 53 ADDED	8-24-45	[redacted]

EO 22746

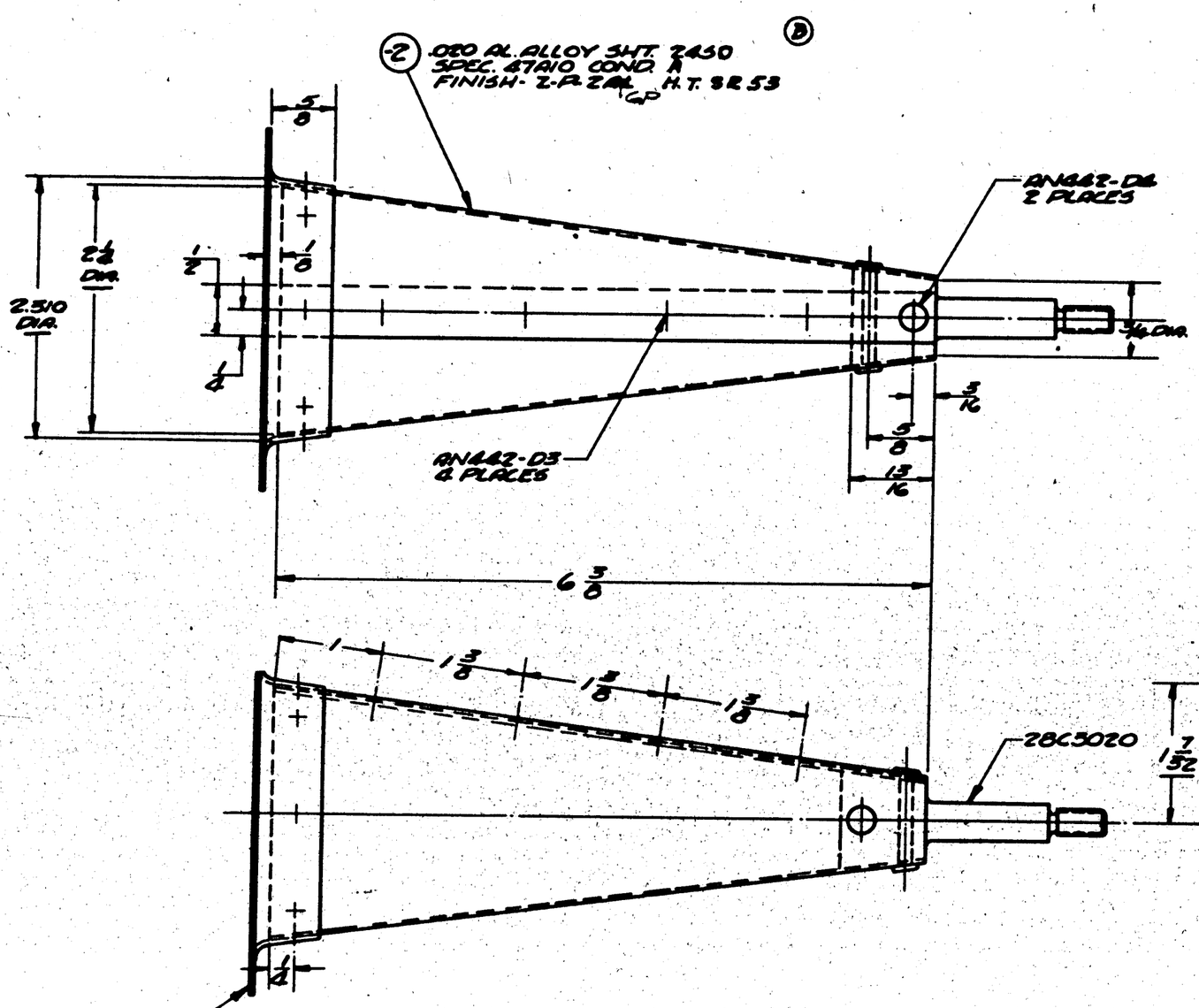

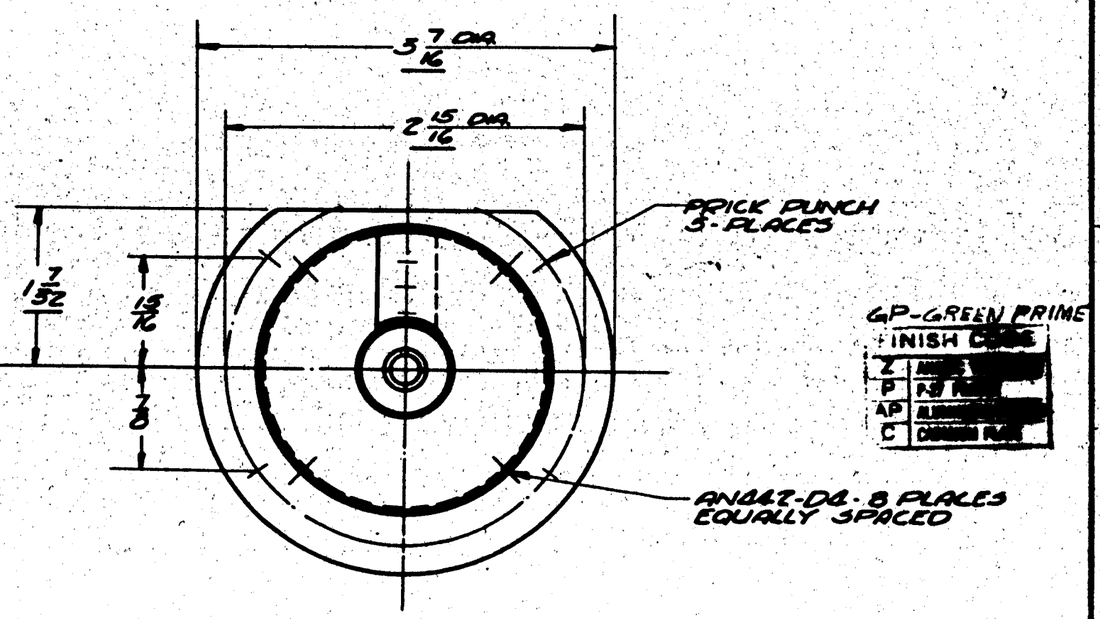

GP-GREEN PRIME FINISH

Z	[redacted]
P	[redacted]
AP	[redacted]
C	[redacted]

(3) .020 AL ALLOY SHT - 2A5
SPEC. 47A10 COND. A
H.T. 3R53 COND T
FINISH Z-P-Z GP
USE DIE #1J1305 IN FORMING.

REPLACES	APPROVED	DATE
REPLACED BY	CALC. WT. .12	ACT. WT.
LIMIT ON DIMENSIONS UNLESS ± OTHERWISE SPECIFIED	SCALE 12"=1'-0"	

O. H.	MODEL	NEXT ASSY.	REQ.	ST'D PARTS	LH REQ.	RH REQ.	PART NO.	LH REQ.	RH REQ.	LH REQ.	RH REQ.	LH REQ.	RH REQ.	LH REQ.	RH REQ.
	PBY-5A	28C2151													
	PBY-5	28C2151					28C3020	1							
	PBY-5	28C2151		AN442-D4			-3	1							
	PBY-5	28C2151		AN442-D3			-2	1							

REQUIREMENTS PER AIRPLANE | MAT. | PARTS LIST PER ASSY.

A-C							
NAVY	NOTED	NOTED	NOTED	NOTED	[redacted] 6-15-45		[redacted]
MATERIAL	SPEC.	HEAT TREAT	FINISH	DRAFT	CHECK	EXAM.	ENG.

CONSOLIDATED AIRCRAFT CORP.
SAN DIEGO, CALIF.

NAME
PEDESTAL - CONTROLS
AUX. CONTROL ARM

OPP. HAND

DWG. D 28C3019

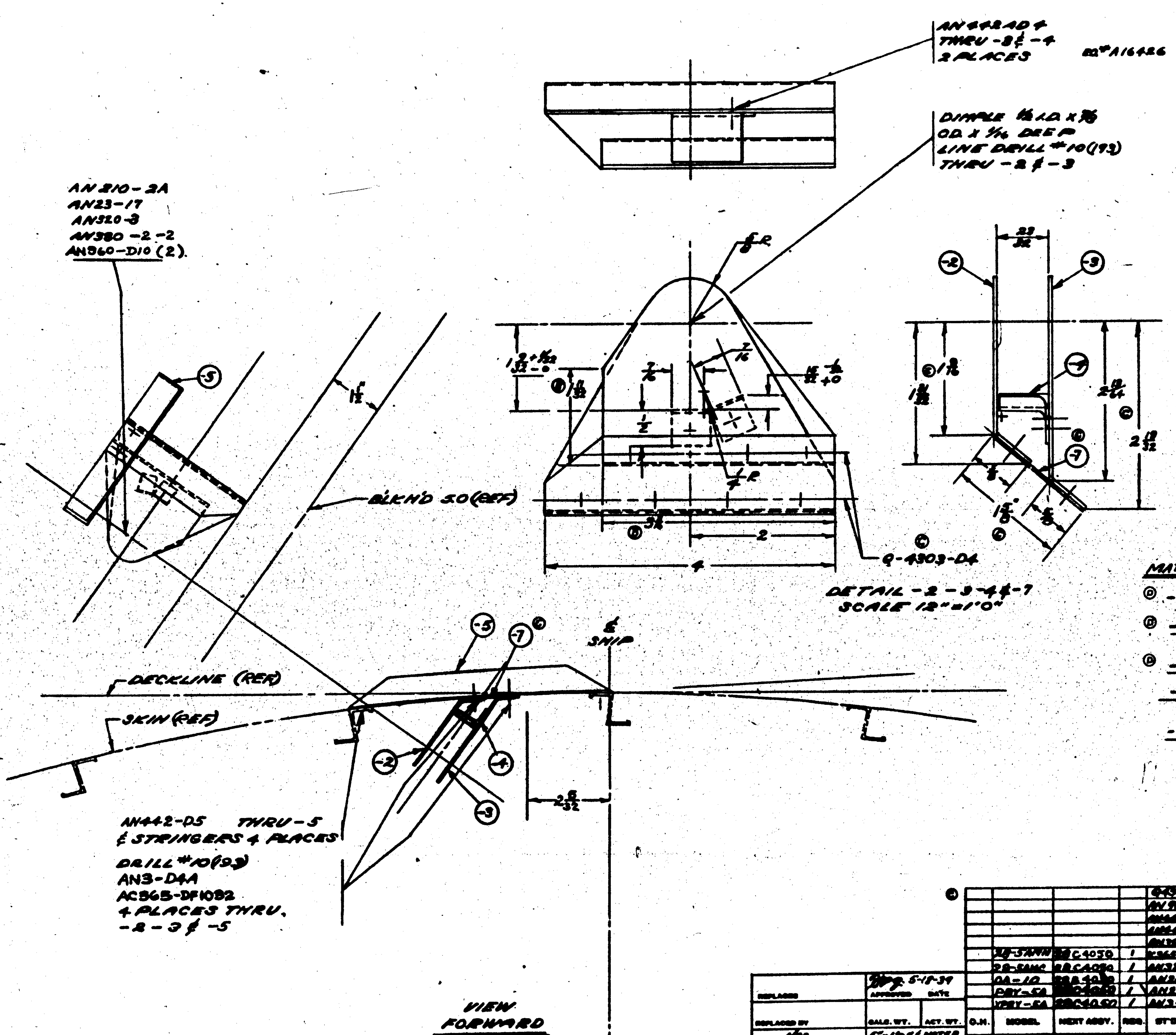

LTR	ALTERATION	DATE	
A	REVISED DIMENSIONS & [illegible]	[illegible]	
B	REVISED -2 DIMENSION	[illegible]	
C	CHANGED [illegible] TO [illegible] FROM [illegible] TO 2 [illegible]. ADDED Q4303-D4, -7 & DETAIL: WT. INCREASE [illegible]	[illegible]	
D	CHG'D MAT. OF -4 FROM Y2-DECT TO Y2A26T. ADDED MAT. SIZES OF -2, -3 & -4 NEG. WT. CHG.	3-17-42	[illegible]
E	IN MAT'L NOTE REPLACED -5 WITH "Y-6-A6T X 7 1/2" WAS "[illegible] X 7 1/2 LG AL. AL. EXTR. DIE #K3876, SPEC. 46A9 COND. T" (WT. CHG. NEG.)	4-15-[illegible]	[illegible]

GP-GREEN PRIME

FINISH CODE

Z	ANODIC TREATMENT
P	P-27 PRIMER
AP	ALUMINUM PRIMER
C	CADMIUM PLATE

ALL BEND RADII 1/8

MATERIAL NOTE ~

Ⓓ -2 .040 X 3 X 3 1/2 AL. ALLOY SHEET SPEC. 47A10 COND. T

Ⓓ -3 .040 X 3 1/4 X 4 1/2 AL ALLOY SHEET. SPEC. 47A10 COND. T

Ⓓ -4 Y2A26T X 1 1/8

-5 Y-6-A6T X 7 1/2

-7 .040 X 1 5/8 X 4 ALC. SHT 24ST

MODEL	NEXT ASSY.	REQ.	STD PARTS	REQ.	PART NO.	REQ.
			Q4303-D4			
			AN960-D10	2		
			AN442-D5			
			AN442-AD4			
			AN380-2-2	1	-7	1
28-SANW	28C4050	1	AC365-DF1032	4		
28-SANC	28C4050	1	AN320-3	1	-5	1
OA-10	28B4050	1	AN310-2A	2	-4	1
PBY-5A	[illegible]	1	AN23-17	1	-3	1
XPBY-5A	28C4050	1	AN3-D4A	4	-2	1

REQUIREMENTS PER AIRPLANE | MAT. | PARTS LIST PER ASSY.

REPLACES | APPROVED 5-18-39 | DATE

REPLACED BY | CALC. WT. | ACT. WT.

SCALE 6" = 1'0" & NOTED

MATERIAL	SPEC.	HEAT TREAT	FINISH
NAVY NOTED	NOTED	[illegible]	Z-P-2GP

DRAFT | CHECK | ENGR. | [illegible]

CONSOLIDATED AIRCRAFT CORP. SAN DIEGO, CALIF.

INSTAL'N - CONTROL LOCK BRK'T - STA. 5.0

D 28C4015

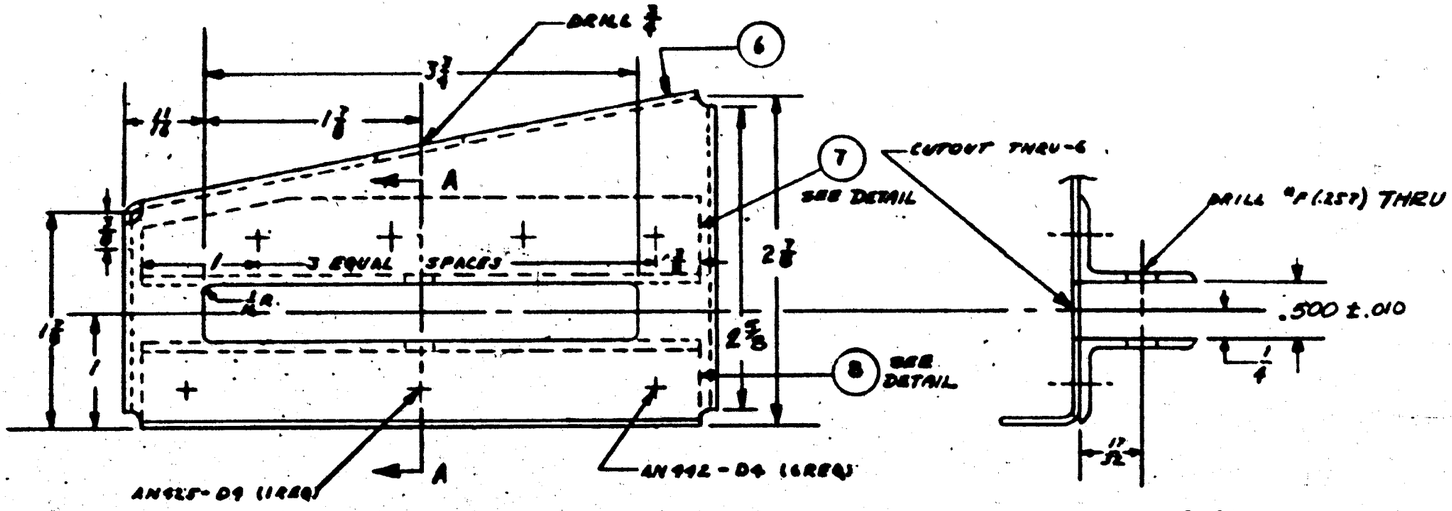

SECTION A-A

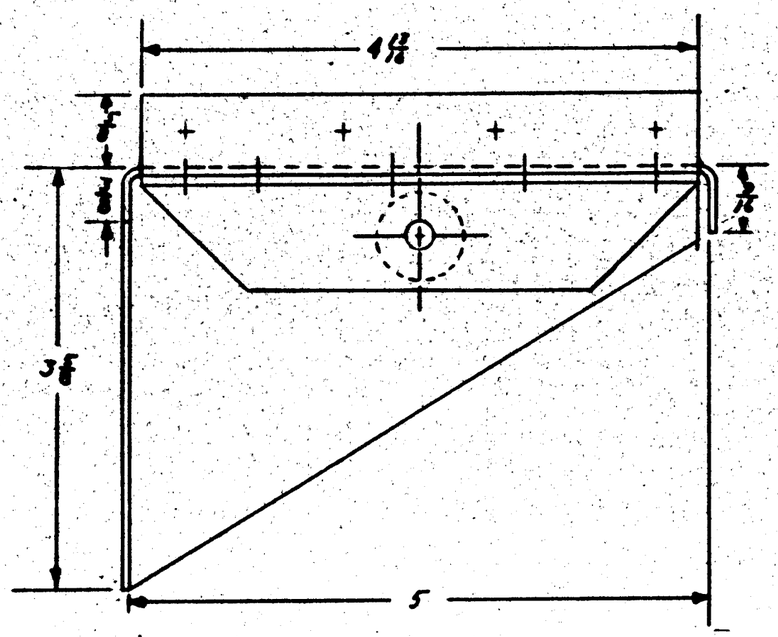

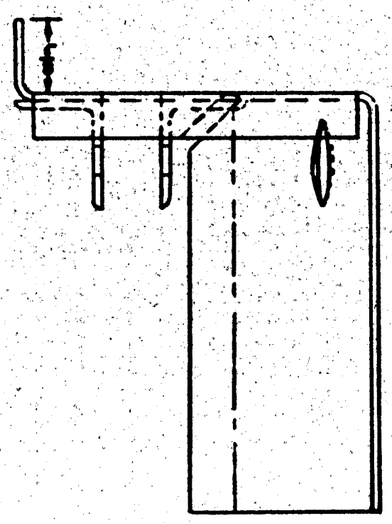

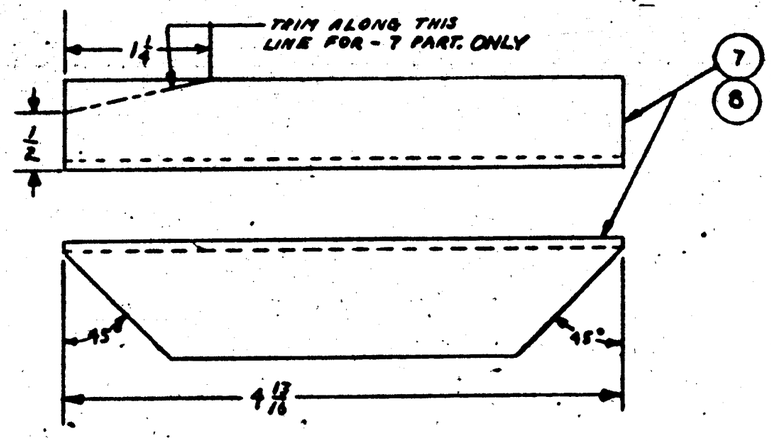

NOTES: ALL BENDS TO BE 3/32 R.
HEAT TREAT - 6 AS PER SPEC. 28-53 CONDT.

GP-GREEN PRIME

FINISH CODE	
Z	[illegible]
P	[illegible]
AP	[illegible]
C	[illegible]

PART No.	STOCK	MATERIAL	SPEC.	LH REQD. -0	RH REQD. -2	LH REQD. -3	RH REQD. -4	LH REQD. -5	RH REQD.
-5	R1250 1 x 3/8	ALALLOY(CLAD) 24S-T		1					
-7	R1250 1 x 3/8	ALALLOY(CLAD) 24S-T		1					
-8	DET		57AR-A	1					

PARTS LIST PER ASSY.

PBY-5A 28C4021 1
XPBY-5A 28C4023 1

LIST SECTION No.	MODEL	NEXT ASSY.	REQ.

REQUIREMENTS PER AIRPLANE

REPLACES — CALC. WT.
REPLACED BY — ACT. WT.

SCALE 12" = 1'-0"

A C
NAVY NOTED — HEAT TREAT
Z - P - & GP — FINISH
DRAFT 7/14/39 — CHECK 7-18-39 — STRUCT — MAT. — APPROV — ENG.

NAME BRACKET - AILERON SERVO PULLEY - AT PILOTS FLOOR

CONSOLIDATED AIRCRAFT CORP. San Diego, Calif.

GRP. HAND —
SIZE D
DWG. 28C4021

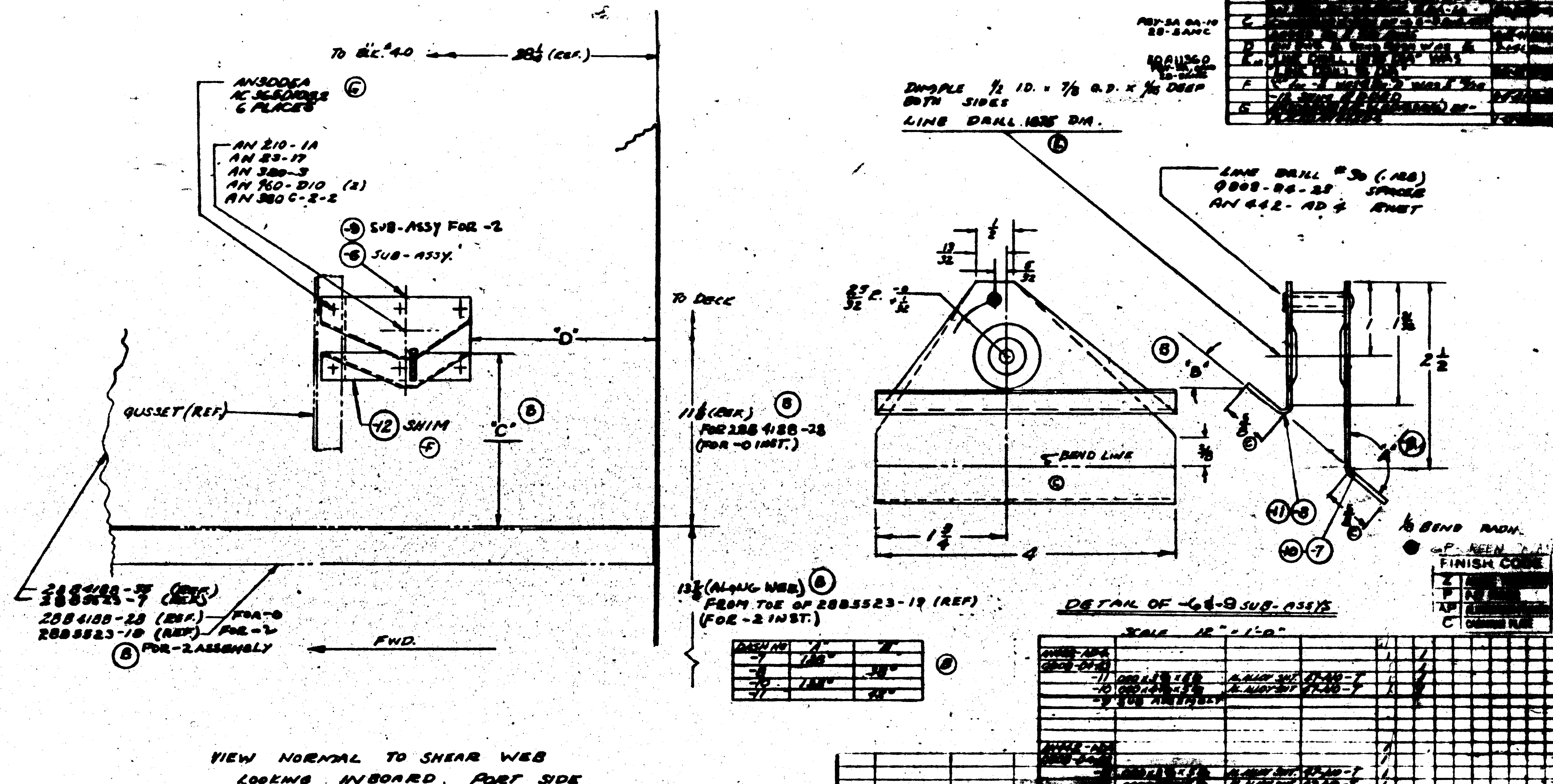

DASH NO	"A"	"B"
-7	180°	
-8		38°
-10	180°	
-11		38°

DASH NO	"C"	"D"
-0	5⅛	4 5/16
-2	5¼	5 5/8

FINISH CODE

Z	[illegible]
P	[illegible]
AP	[illegible]
C	[illegible]

PART No.	STOCK	MATERIAL	SPEC.	REQ -0	REQ -2	REQ -3	REQ -4	REQ -5
AN442-AD4				1	1			
9808-04-28				1	1			
-11	.080 x [illegible]	AL ALLOY SHT.	24S-AO-T	1	1			
-10	.080 x [illegible]	AL ALLOY SHT.	24S-AO-T	1	1			
-9	SUB ASSEMBLY							
AN442-AD4				1				
9808-04-28				1				
-8	[illegible]	AL ALLOY SHT.	24S-AO-T	1				
-7	[illegible]	AL ALLOY SHT.	24S-AO-T	1				
-6	SUB ASSEMBLY							
AN300EA				6	6			
AN960-D10				2	2			
AC365D1032				6	6			
AN380C-2-2				1	1			
AN380-3				1	1			
AN210-1A				1	1			
AN23-17				1	1			
-12	.051 x 2⅛ x 3⅜	[illegible]	24S-RR-T		1			
-9	SUB-ASSY.				1			
-6	SUB-ASSY.			1				

PARTS LIST PER ASSY.

C-8 BSH76 — C-70996&71713

NEXT DASH No.	MODEL	NEXT ASSY	REQ
-2	PBY-5A	28C2886	1
-3	[illegible]	[illegible]	1
-2	[illegible]	[illegible]	1
-2	PBY-5A	[illegible]	1

REQUIREMENTS FOR AIRPLANE

REPLACES — CALC WT

REPLACED BY — ACT WT

LIMIT ON DIMENSIONS UNLESS OTHERWISE SPECIFIED ± 1/32 — SCALE 6" = 1'-0" (MARKED)

STAMP PART NUMBER WHERE SHOWN

[redacted]

A C — NAVY SR-53 — HEAT TREAT

Z-P-2 [illegible] GP — FINISH

DRAFT 9-1-39 — CHECK — STRUCT — MAT — APPROV. — ENG

OPP. HAND —

NAME: INST. - CONTROLS - TAB BRACKET OUTBOARD SHEAR WEB

D-28C4031

CONSOLIDATED AIRCRAFT CORP. SAN DIEGO, CALIF.

LET	ALTERATION	CHKD	APPD
A	DWG -11, 1 HOLE ADD.		

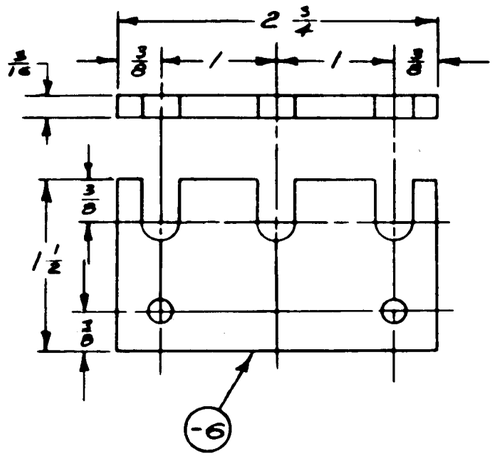

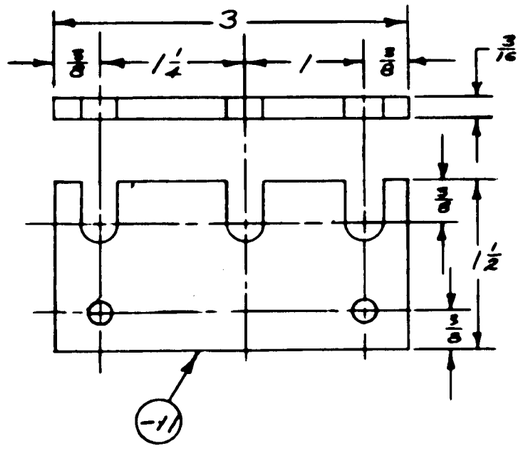

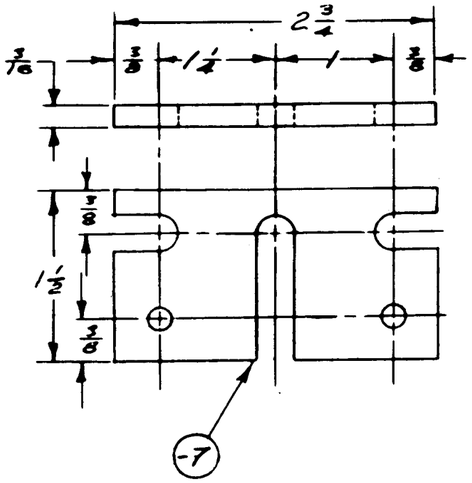

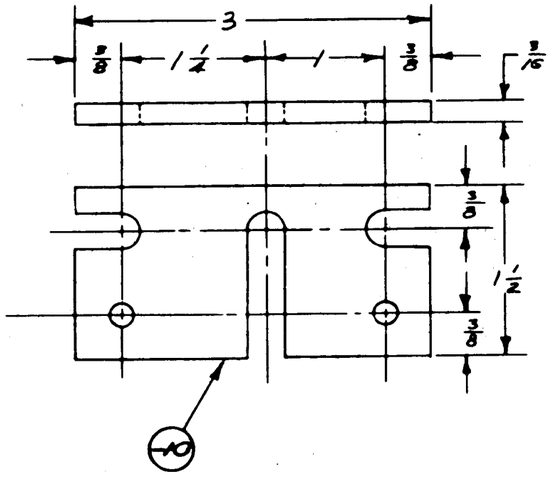

NOTE:
ALL SLOTS 5/32 RADIUS
DRILL ALL HOLES #10 (.193)

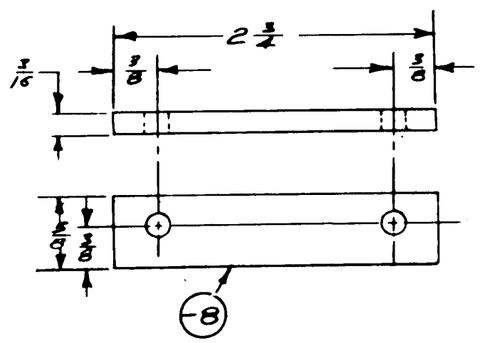

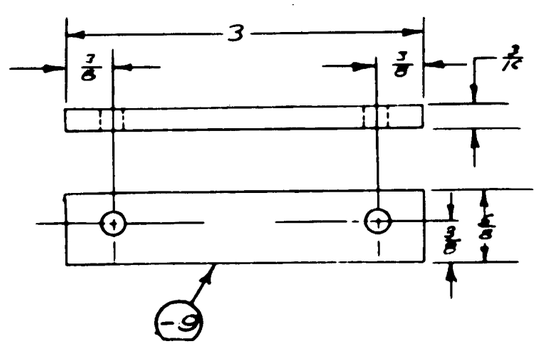

	-9	PBY-5B	28C5500	2
	-10	PBY-5B	28C5500	2
	-11	PBY-5B	28C5500	2
70996 77713	-9	PBY-5A	28C5700	2
	-10	PBY-5A	28C5700	2
	-11	PBY-5A	28C5700	2
C-88476	9-10-11	PBY-5A	28C5864	2EA
	-11	PBY-5	28C5000	2
	-10	↓	↓	2
	-9	PBY-5	28C5000	2
	-11	XPBY-5A	28C4025	2
	-10	↓	↓	2
	-9			2
	-8			2
	-7			2
	-6	XPBY-5A	28C4025	2
	ASSY DASH NO.	MODEL	NEXT ASSY.	REQ.

REQUIREMENTS PER AIRPLANE

REPLACES — CALC WT

REPLACED BY — ACT WT

LIGHT ON DIMENSIONS UNLESS OTHERWISE SPECIFIED ± 1/32 — SCALE 12" = 1'0"

STAMP PART NUMBER WHERE SHOWN

PART NO	STOCK	MATERIAL	SPEC.	LH REQ.	RH REQ.	LH REQ.	RH REQ.	LH REQ.	RH REQ.	LH REQ.	RH REQ.	LH REQ.	RH REQ.
28C4034-11	X3/16	PHENOLIC MATERIAL	17PB TYPE PBS FORM B										
-10													
-9													
-8													
-7													
28C4034-6	X3/16	PHENOLIC MATERIAL	17PB TYPE PBS FORM B										

PARTS LIST PER ASSY.

A C		8-20-41							
NAVY NONE HEAT TREAT	NONE FINISH	AIRCRAFT	CHECK	STRUCT	MAT.	APPROV.	ENG.		

NAME FAIRLEADS - CONTROL SYSTEM - STA. # 6.0 & 7.0

CONSOLIDATED AIRCRAFT CORP. SAN DIEGO, CALIF.

OPP. HAND

SPEC. D SHEET

28C4034

LET	ALTERATION	CHKD	BY
G.	(CONT) ADDED DETAILS -13		
	E/4 NO WT CHG	2-22-44	

LET	ALTERATION		
A	[illegible]		
B	AN 23-17 WAS AN 3-11 2 PLS WAS 1.3 1 PLS WAS 1.8		2-22-44
C	9 PLS DIM. ON -11 WAS 2 1/2 -11 WAS -7, 2 3/8 DIM ON -12 WAS 2 1/4 -10 WAS -8 -9 ASSY WAS -8 [illegible]		
D	1 PL DIM WAS 2 1/16, .28 WAS .27		1-12-44
E	IN MAT'L NOTE -10, -11 WERE CUT ALL BEND RADII WAS 1/16		1-21-44
F	[illegible] -9 SUB ASSY. -13 WAS -10, -14 WAS -11, DIMS. 2 PLS WAS 1/8, E 1 1/16 WAS 1/8. WT CHG NEG		
G	REMOVED DETAIL DIMS FROM -9 SUB ASSY. (cont)		

EQA16475 A

EQB22552

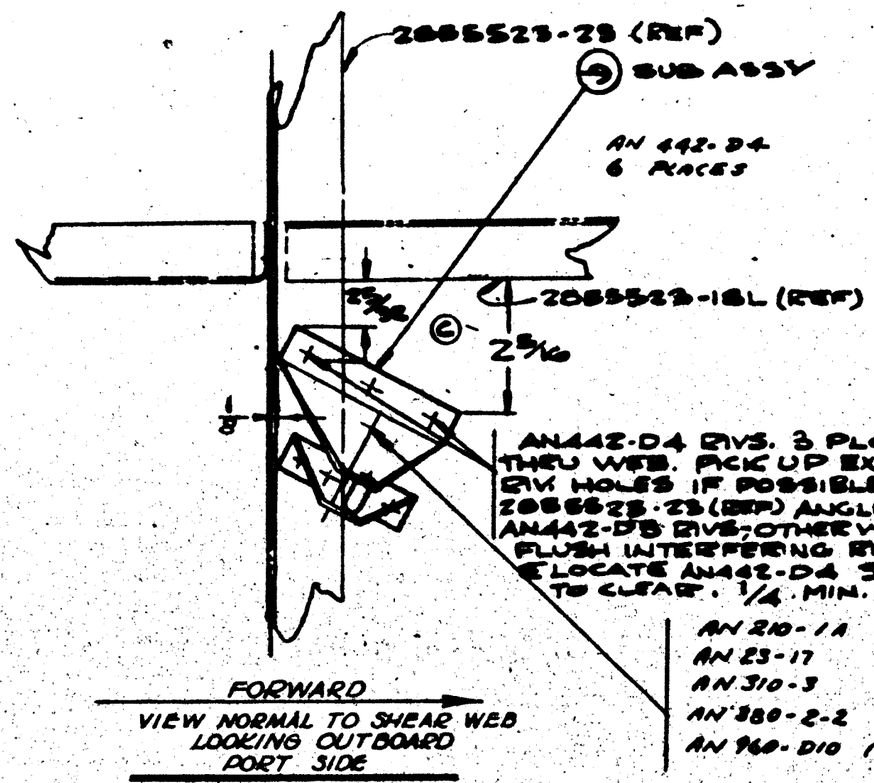

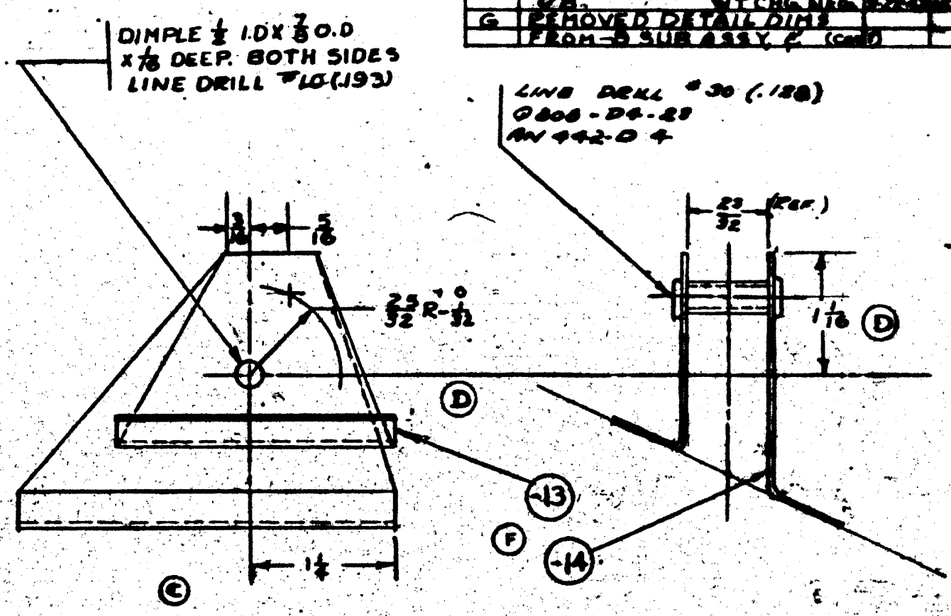

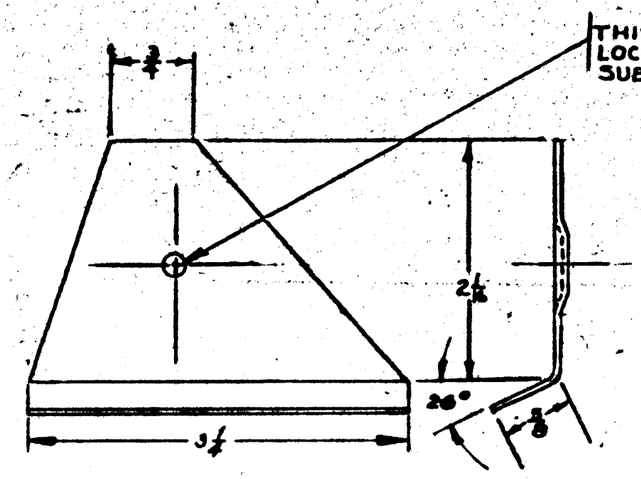

DETAIL -14
SCALE 12"=1'-0" (G)

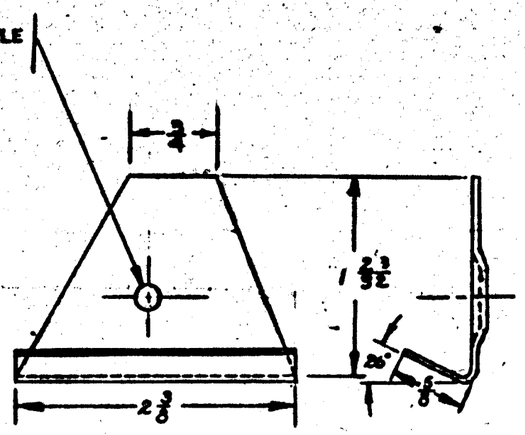

DETAIL -13
SCALE 12"=1'-0" (G)

DETAIL OF -9 SUB-ASSY.
SCALE 12" = 1'-0"

GP-GREEN PRIMER FINISH

NOTE—
(E) 1. MAKE -13 & -14 FROM .040 AL. ALLOY SH'T. SPEC QQ-A-355-T

| | | |

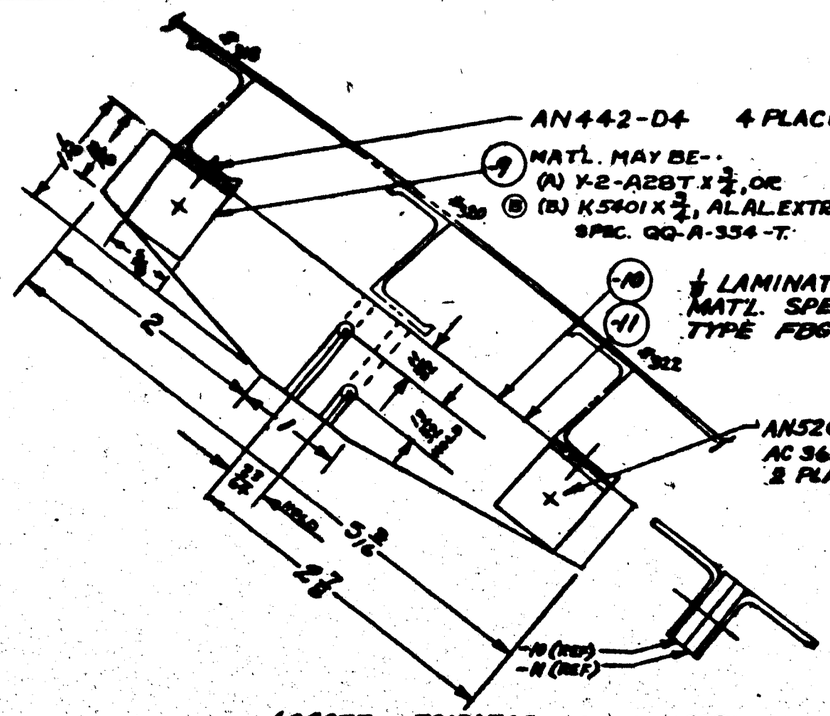

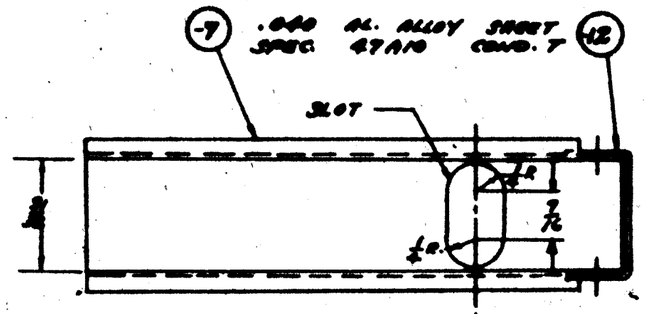

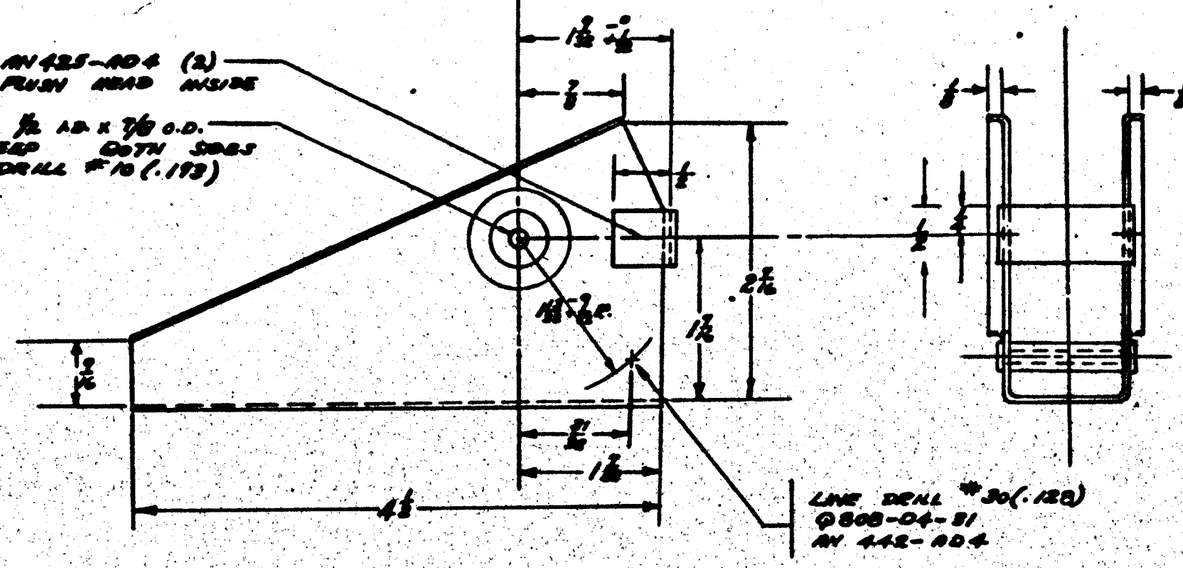

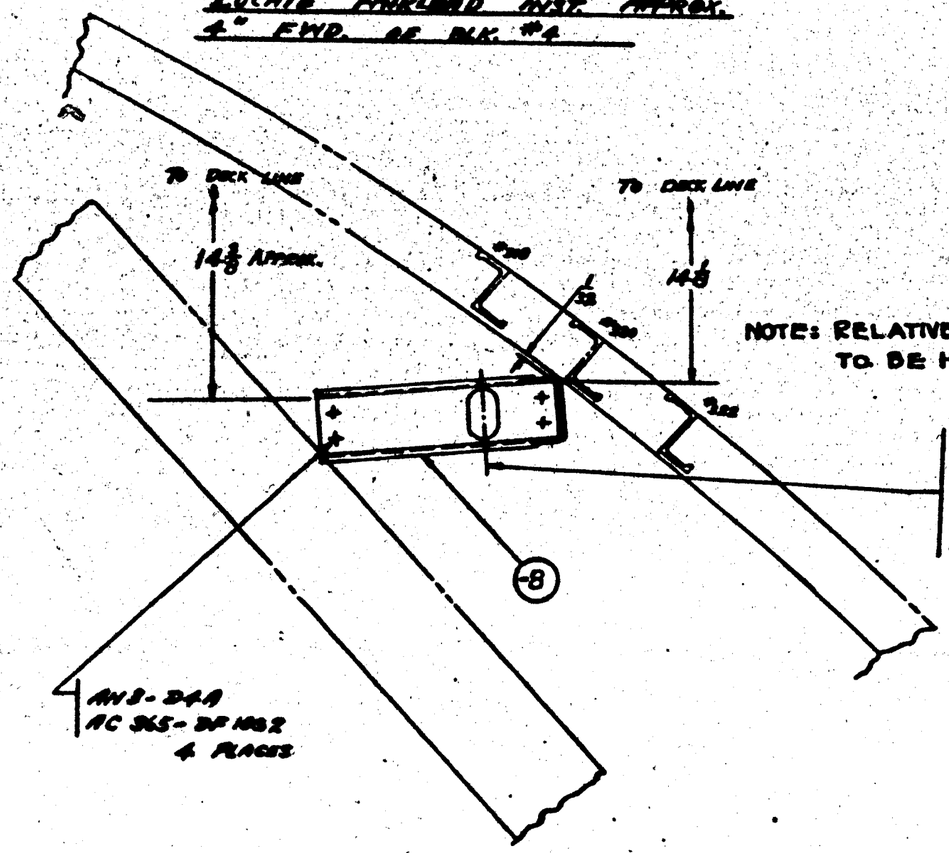

NOTE: RELATIVE POSITIONS OF BRACKET & STRINGER #320 TO BE HELD AS SHOWN.

AN 210-2A (2)
Q 810-6-8
AN 23-38
AN 320-3
AN 380-2-2
AN 960-D10 (2)

DETAIL OF -8 SUB. ASSY.
SCALE 12" = 1'-0"

ALL BEND RADII 1/16
FINISH -7 -9 Z-P-2GP

FINISH CODE
Z
P
AP
C

QTY	REFERENCE
A	CHANGED DETAIL DIMENSIONS, ADD NOS 8 - 11 LOCATIONS, DELETE MISCLEAKS, ADD -8. CHANGED STANDARD PARTS ADV -8 TO
B	ADDED MATL SPECIFICATION AS -8 IN A-A SECTION, ADD STOCK SIZE -8, DELETE "3/4" DIA, ADD "3/4 DIA EXTR. DIE" IN A-A SECTION, ADD NOTE 4449-T" WITH ARROW.
	NOTE ADDED "DIM. (WET CORR. ALLOW. TO BE ADDED)"

QTY	PART NO.
1	Q308-04-31
1	AN442-A04
2	AN425-A04
1	-8
1	-9
1	-11
1	-10
2	AN210-2A
1	AN320-3
2	AN960-D10

-8 SUB. ASSY.

QTY	O.H.	MODEL	SHEET ASSY.	REQD.	QT'S PARTS	QTY REQD.	QTY	PART NO.
2	2A-5AN4	28C4050	1	AN960-D10	2			
1	2A-5AN5	28C4060	1	AN380-2A	2			
1	P&W-R4	28C4050	1	AN23-3B	1			
1	P&W-R4	28C4060	1	AN3-3AA	1			

REPLACED	DATE
REPLACED BY	CHKD. WT. / DEV. WT.
	6"=1'-0"

AC			
NAVY AN3170	AN3170	AN960	AN3170
MATERIAL	SPEC.	HEAT TREAT	FINISH

CONSOLIDATED AIRCRAFT CORP. SAN DIEGO, CALIF.

INST. - CONTROL LOCK BRACKET AT STA. #40

DWG. NO. D 28C4044

VIEW AFT TOWARD BULK. # 4.0

INCORPORATES
PBY-1 BU. AER. CHG. 8131
PBY-2 " " 891
PBY-5 28-5M
CA-10 E.O. 399805

SUPPLIES & EQUIPMENT CLASSIFICATION			
LET	ALTERATION	DATE	OK
D	TRACED	6-6-39	
	AN 960-10 REPLACED BY 3 WASHERS AN 960D10 & AN 960D1032	4-11-41	
E	AN 960-10 REPLACED BY AN 960D4A	4-11-41	
	AN960D1032		

& SHIP

28B1094-22 (REF)

5/8 — 4 EQUAL SPACES

9/16 REF

9/16 REF

5/8 — 4 EQUAL SPACES

28B1094-52 (REF)

28B1094-18 (REF)

2 3/4 — VIEW LOOKING AT REAR FACE OF 28B1094 REAR DIAGONAL BULKD.

AN960A
AC365D1032
8 PLACES
(E)

AN960A
AC365D1032
8 PLACES

2" — 2 1/2 — 55° — DECKLINE

1 1/8 — 7/32

31/32 — 7/32

1 11/16 R — 1 13/32 R

DRILL #10 (.193)
AN 210-2A
AN 23-17
AN 320-3
AN 960-10
AN 380-2-2

AN 442-D4

28B1094-66 (REF)

FORWARD

28B1094 (REF)

2 27/32 — 11°30' — 1/4 R — 5/8 — 2 3/4 — 5 7/8

1/4 — 3/4 — 2 7/8 — 3/4 — 2 3/4 — 3/4

19/32 — 19/64

Q 608-D4-19
AN 442-D4

(-1) .064 AL ALLOY SHT 24ST
SPEC: 47A10 COND T
FINISH: Z-P-2 GP

(-2) .064 AL ALLOY SHT (24ST)
SPEC: 47A10 COND T
FINISH: Z-P-2 GP

NOTE:
ALL BEND RADII 1/8

1 — 5/8 — 9/16 — 15/16 — .040 — 2 11/32

										AC [illegible]	11
										AN960D4A	8
										AN960A	8
										AN320-10	1
										AN442-D4	
										AN608-D4	
										AN380-2-2	1
										AN320-3	1
										AN210-2A	2
										AN23-17	1
										Q 7004-D4 [illegible]	1
										Q 608-D4 [illegible]	2
										28C4060-2	1
										28C4060-1	1
	PBY-5B	28C4050	1								
	PBY-5A	28C4050	1								
	PBY-5	28C4050									
	PBY-1	28C4050									
	PBY-2	28C4060									
	PBY-3	28C4050									
	PBY-4	28C4050									
LH	RH	PART NO.	LH	RH	O.H.	MODEL	NEXT ASSY.	REQ.	STD PARTS	REQ.	

28-5MA	28C4050		
28-5MC	28C4050		
28-5ME	28C4050		
28-5MN	28C4050		
28-5AMC	28C4050		
O.H.	MODEL	NEXT ASS'Y.	REQ.

REPLACES
REPLACED BY
LIMIT ON DIMENSIONS UNLESS OTHERWISE SPECIFIED ± .010

ENG. APPROVED 5-15-39 DATE
CALC. WT. .53 ACT. WT.
SCALE 12" = 1'0"
AC
NAVY NOTED MATERIAL

REQUIREMENTS PER AIRPLANE: NOTED SPEC. | NOTED HEAT TREAT | NOTED FINISH
MAT. | PARTS LIST PER ASSY.

CONSOLIDATED AIRCRAFT CORP. BUFFALO, N.Y.

NAME INST-RUDDER LOCK-TAIL PULLEY BRKT

DWG. NO. 28C40[illegible]

INCORPORATES
PBY-1 BU. AER. CHG. #131
PBY-2 " " " 91

SUPPLIES & EQUIPMENT CLASSIFICATION			
LET	ALTERATION	DATE	BY
B	TRACED	2-2-39	MTMAYER
C	ADDED -4, -5 ASSY. & PARTS. CHG'D M-BAR TO BAR.		
D	ADDED PB LIGHT ON DIM & CHANGED 1-30-41 EDM TO		
	SPEC. TO RR WAS W.L. & T.		
E.D.C. MARTMAYER 7-22-41 E	ADDED, SUB. ASS'Y -10, 28C4080		
	-8 (1) # Q6342-3R(L), SUB. ASS'Y		
	-11, 28C4080-3 (1) # Q6342-3L		
	(12) # SUB. ASS'Y -12, 28C4080		
	-4 (1) # Q6342-3L(L) TO B/M		
	BROUGHT R.P.A. UP TO DATE	7-29-41	DKC
E.O. #A33244 F	FOR -2-3-4 "CARBON TINNED STEEL		
	CABLE ETC" WAS "CORROSION RESIST STEEL		
	428N CLASS "ETC": .552" WAS .585" ON		
	NOTE "1" ADDED TO NOTE "2" PARALKAT		
	ONE SPEC. ETC." - (WT. CHG. NEG.)	4-18-42	[illegible]
E.O. A41086 6	IN NOTE "1" 442 LBS WAS 552 LBS		
	NO. WT. CHG.	6-3-42	[illegible]

SUB ASS'Y.	LENGTH	
(2) -11	625 18/16	52'-1 18/16"
-12	599 3/4	49'-11 3/4"

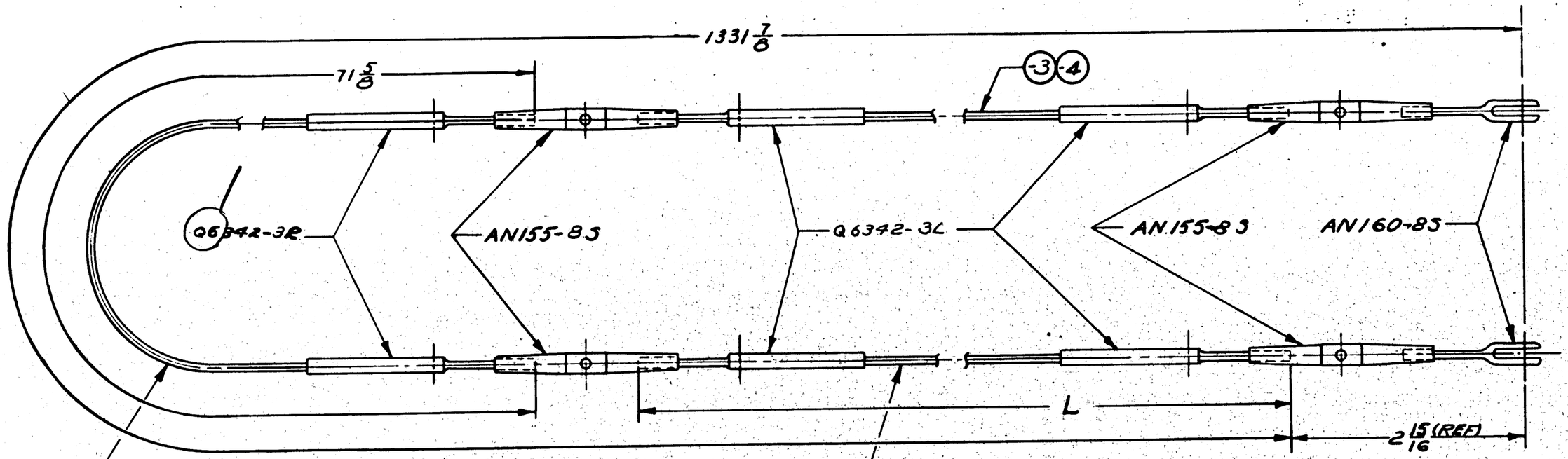

(-2) 3/32 DIA. CARBON TINNED STEEL CABLE (7X7) SPEC. ANRR-C-43. (F)

(-3) (-4) 3/32 DIA. CARBON TINNED STEEL CABLE (7X7) SPEC. ANRR-C-43. (F)

NOTES:-
1. PRESTRETCH CABLE ASSEM TO 442 LBS
(6) 2. CABLE TO BE COATED WITH PARALKATONE (F) SPEC. RM 61 TYPE B AS PER SPEC SR15C
3. LENGTHS GIVEN ARE WITH THREE THREADS EXPOSED ON Q6342 TURNBUCKLE SLEEVES, AND NONE EXPOSED ON AN160-8S FORKS
4. SWAGE TERMINALS AS PER SPEC. T-46

Q6342-3L	2									
28C4080-4	1									
PARTS LISTED ON -12										
Q6342-3L	2									
28C4080-3	1									
PARTS LISTED ON -11										
Q6342-3R	2									
28C4080-2	1									
PARTS LISTED ON -10										

-5	28-5AMN	28C4050	1				
-5	28-5AMC	28C4050	1				
-0	PBY-5B	28C4050	1				
-0	28-5 MN	28C4050	1				
-0	28-5 ME	28C4050	1	AN160-8S	2		2
-0	28-5 MC	28C4050	1	AN155-8S	4		4
-0	28-5 MA	28C4050	1				
-5	PBY-5A	28C4050	1				
-0	PBY-5	28C4050	1				
-0	PBY-1	28C4050	1				
-0	PBY-2	28C4050	1				
-5	*PBY-5A	28C4050	1	-12	-		2
-0	PBY-3	28C4050	1	-11	2		-
-0	PBY-4	28C4050	1	-10	1		1
	MODEL	NEXT ASSY.	REQ.	PARTS	-0		-5

REPLACES
REPLACED BY
LIMIT ON DIMENSIONS UNLESS OTHERWISE SPECIFIED ± 1/32

APPROVED LCM DATE 2-19-39
CALC. WT. 1.66 LBS ACT. WT.
SCALE 12"=1'0"

REQUIREMENTS PER AIRPLANE			MAT.	PARTS LIST PER ASSY.			
AC				LEHMAN		MARTMAYER	
NAVY NOTED	NOTED	NONE	NOTED	7-7-38		7-7-38	R
MATERIAL	SPEC.	HEAT TREAT	FINISH	DRAFT	CHECK	EXAM.	ENG.

CONSOLIDATED AIRCRAFT CORP. BUFFALO, N.Y.
STAMP PT. No. WHERE SHOWN

NAME CABLE ASSEMBLY RUDDER LOCK CONTROL

OPP. HAND —
Dwg. D 9178
28C4080

28C4080

SUPPLIES & EQUIPMENT CLASSIFICATION			
LET	ALTERATION	DATE	BY
B	TRACED	2-8-37	ARNOLD
C	BOSS $\frac{5}{16}$ HAS $\frac{3}{8}$ IN 6 PLACES), $1\frac{1}{16}$	1-4	
	W/AS 1/16 (110 WT. CHG	9-2-37	

EAA39353

NOTE: THESE TWO BRACKETS IDENTICAL

$\frac{3}{16}$ DIA. BOSS 4 PLACES

DRILL $\frac{11}{64}$ THRU LINE REAM .190 .192 4 PLACES

NOTE: THESE TWO BRKTS IDENTICAL EXCEPT FOR ANGLE

NOTE: THIS BR'KT NOT HORIZONTAL

CAST PART NO. HERE ON FAR SIDE

CUTOUTS THRU WEB - 4 PLACES

NOTE:—
ALL FILLETS TO BE $\frac{1}{8}$ R.
ALL EDGES TO BE $\frac{1}{16}$ R.

GP-GREEN PRINT

[redacted]

								LH	RH
	P8C-5	28C4090	1						
	P8F-5B		1						
	P8F-5A		1						
	28-5MA		1						
	28-5MC		1						
	28-5ME		1						
	28-5MH		1						
	28-5AMC		1						
	P8Y-4	28C4090	1						

O.H.	MODEL	NEXT ASSY.	REQ.	ST'D PARTS	PART NO.
REQUIREMENTS PER AIRPLANE				MAT.	PARTS LIST PER ASSY.

			AFTER MACHINING	WEIR		HNH			
NAVY	ALUM. ALLOY CASTING	4GA1-CL4	29000 #/IN	X-P-2[redacted]GP	2-6-37		2-23-37	R	
MATERIAL		SPEC.	HEAT TREAT	FINISH	DRAFT	CHECK	EXAM.	ENG.	

REPLACES

REPLACED BY

LIMIT ON DIMENSIONS WHERE NONE OTHERWISE SPECIFIED ± .02

[redacted]

APPROVED J. C. [redacted] 2-18-89 DATE

CALC. WT. .42 ACT. WT.

SCALE 12" = 1'-0"

CONSOLIDATED AIRCRAFT CORP. BUFFALO, N.Y.

GROUP PZ, No. WHERE SHOWN

NAME BRACKET - TAB CONTROL FRAME "3.50 - PULLEY

OPP. HAND

SIZE D

28C4089

SULLIVAN-GRIFFEN CO. INC. BUFFALO

SUPPLIES & EQUIPMENT CLASSIFICATION			
LET	ALTERATION	DATE	BY
B	TRACED	2-6-39	MRLO
C	REMOVED AN 442 D4 FROM DWG.	5-9-41	[illegible]
	ADDED AN 3 5A, AN 365-1032		
	AN 960-AL 10 (4 PLACES)		
D	ADDED -6 SUB ASSEM.	7-10-41	[illegible]
	ADDED, Q7102-A10 (8) TO		
	-6 SUB ASSEM.		
E	ON FIRE & RH 4/N AN320-3 WAS AN320-4	1-14-42	[illegible]
F	CANCELLED -6 SUB ASSY.		
	CALLED PARTS IN B.M.		
	NO WT CHG	8-27-42	[illegible]

E.O.A 36216
PBY-5, 5A
OA-10, 28-5

E.O.A 52877

28C4088 - 2 PLACES.
TO HOLD IN PLACE
BEND ENDS TO SUIT

STRINGER #304

(2) .070 x 3/4 x 3/4 AL. ALLOY ANGLE
BEND UP 101° ON 3/32 R
SPEC: 47A10-CONDT

AN 3-5A
AN 365-103R
AN 960 AL 10
3 PLACES
LOCATE ON ASSY.

(C)

28C4089

14°

℄ SHIP

VIEW ON PORT SIDE
LOOKING FORWARD

(C)

AN 3-5A
AC 365-1032
AN 960-AL-10
4 PLACES

AN 442-D4
3 PLACES.

(C)

AN 210-1A.
4 PLACES

(F)

AN 23-17
AN 960-10
AN 320-3
AN 380-2-2
4 PLACES

(E)

Q7102-A10
8 PLACES

(D)

℄ FRAME #3.50

GP GREEN PRIME

FINISH CODE	
Z	ANODIC TREATMENT
P	P-27 PRIMER
AP	ALUMINIZED PRIMER
C	CADMIUM PLATE

										AN 320-3	3
										AN 210-1A	4
										AN 23-17	4
										Q7102-A10	8
										28C4089	1
										28C4088	2
						AN 442 D4					
						AN 3-5A	7				
C-91876		PBY-5	28C5086	1		AC 365-1032	7				
C-70496		PBY-5	28C5060	1		AN 960 AL 10	7				
		28-5AM-2A	28C5500	1 EA		AN 960-10	4				
		PBY-5A	28C5780	1		AN 380-2-2	4				
C-70496 & 77713		PBY-5A	28C5780	1						28C4090-2	
		28-5AM-2A	28C5750	1 EA							
		PBY-4	28C2000								
O.M.		MODEL	NEXT ASSY.	REQ.		STD PARTS	LH REQ.	RH REQ.	PART NO.	LH REQ.	RH REQ.

REPLACES	J.C.W.S. APPROVED	8-18-39 DATE	REQUIREMENTS PER AIRPLANE	MAT.	PARTS LIST PER ASSY.
REPLACED BY	.63 CA. C WT.	ACT WT.			
LIMIT ON DIMENSIONS UNLESS OTHERWISE SPECIFIED ± 1/32	SCALE 12" = 1'-0"				
	AC			1-19-38	WELDMENT
	NAVY NOTED		NOTED / NONE	-2, Z-P-2 GP	WELDMENT APPLIED RIVETS
	MATERIAL		SPEC. / HEAT TREAT	FINISH	DRAFT / CHECK / EXAM. / ENG.

CONSOLIDATED AIRCRAFT CORP. BUFFALO, N.Y.

STAMP PT. No. WHERE SHOWN

NAME INSTALLATION - TAB CONTROL FRAME #3.50 - PULLEY BRACKET

OPP. HAND

DWG. SIZE D 28C4090

R 28C4090

LET	ALTERATION	DATE	BY
J	REDRAWN	4-17-42	[illegible]
K	CHANGED -6-8-20 PART NOS. (SEE ST. STEEL SPEC 49 CHECKED BY C-1-8-10 -11-13 PLAIN STEEL SPEC. 2364 CLASS TO CAR. TINNED STEEL CABLE SPEC. ANRR-C-93. ADDED 5/32 7x19 TO -7-8. NOTE 1 WAS "PRE-STRETCH CABLE ASSY TO 60% RATED LOAD (2520#)"	4-30-42	[illegible]
L	AN25-15 WAS AN2514; AN960-5/16 (4) WAS AN960-516L (4)-TO -21 SUB ASSY NOTE ADDED, "PLACE --- LINK" NEG. WT. CHG.	7-11-42	[illegible]
M	CREATED -24 ASSY. — NOTE 5 ADDED (NO WT. CHG.)	7-17-42	[illegible]
N	REVSD. R/AIRPLANE BLK. CREATED -25	7-17-42	[illegible]
P	ASSY. WT. CHG. NEG.	9-22-43	[illegible]
	DIM "C" WAS 189. REVISED BLK. NOTES "LENGTH---LENGTH" WAS "LENGTH--CABLE" WT. CHG. NEG.	9-22-43	[illegible]
Q	ON FACE C B/M AN960-516L (4) WAS AN960-516 (4) FOR -21 & -23 SUB ASS'YS. NOTE "DETAIL OF -21 & -23 SUB. ASS'YS" WAS "DETAIL OF -21 SUB. ASSY FOR -51 & -53 ASS'D." IN NOTE "PLACE AN960-516L--- LINK." AN960-516L WAS AN960 -516. WT. CHG. NEG.	3-23-43	BEARD

E.O. "A" ASSY

E.O. A47040

E.O. A56053 MCR. #23
E.O. A57751 MCR-25-1
E.O. B4084

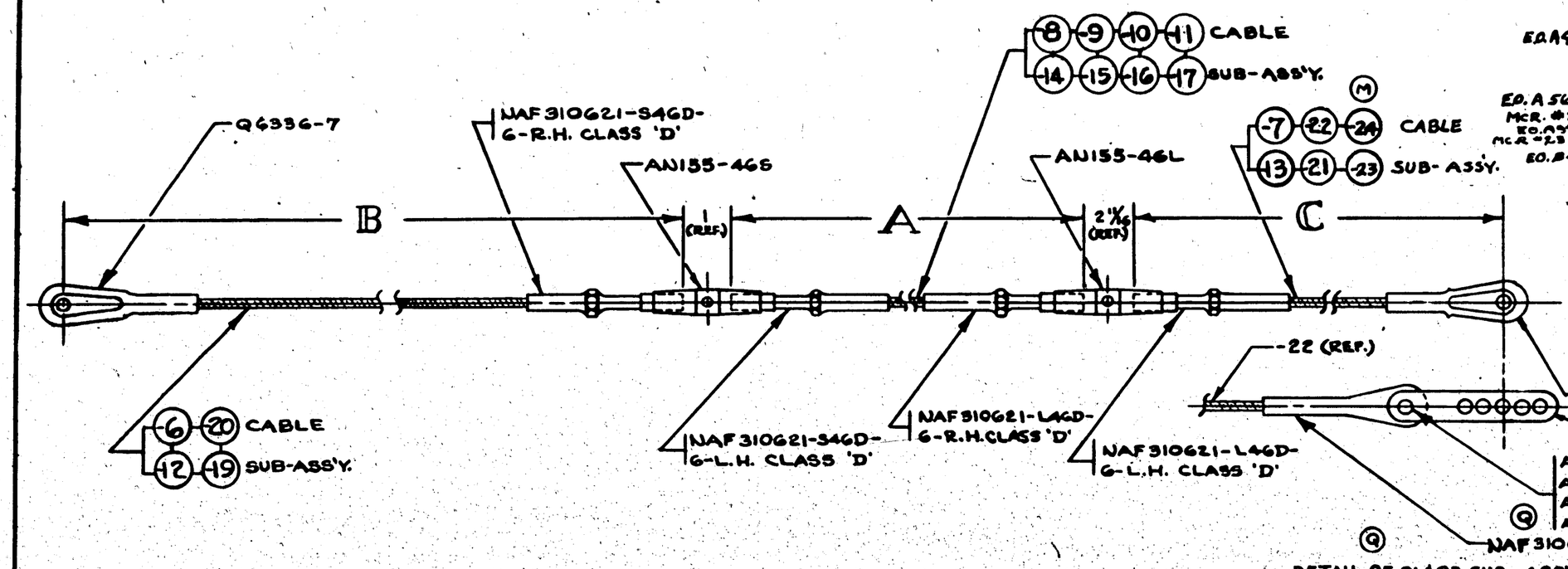

DETAIL OF 21 & 23 SUB-ASS'YS — NOTE: PLACE AN960-5/16L WASHERS BETWEEN NAF 310621-B6 FITTING & 28C6027 LINK.

SUB-ASS'Y.	CABLE	A	B	C
-12	-6		98 1/16	
-14	-8	457 11/16		
-15	-9	459 1/8		
-16	-10	36-3 1/16		
-17	-11	36-2 9/16		
-19	-20		98 15/16	
-21	-22			159
-23	-24			163 1/2
-13	-7			159

NOTES:

1. PRE-STRETCH CABLE ASS'Y. TO 60% RATED STRENGTH (2520#). (K)
2. CABLES TO BE COATED WITH PARALKATONE SPEC. RMGI-TYPE 'B' AS PER SPEC. 9R15C.
3. DIMENSIONS SHOWN ARE WITH 3 THREADS EXPOSED AT TURNBUCKLES.
4. -0 & -3 ASSEMBLIES ON PORT; -2, -4, -51 & -53 ASSEMBLIES ON STARB'D.
5. LENGTH OF -24 CABLE & -25 SUB-ASSY. TO BE CHECKED ON FIRST FIVE INSTALLATIONS & ENG. DEPT. NOTIFIED AS TO CORRECT LENGTH. (M)

ASSY. DASH NO.	MODEL	NEXT ASSY.	REQ.
-55	PBY-5A	28C3564	1
-54	PBY-5	28C3500	1
-53	28-5AMN	28C5750	1
-2	28-5MN	28C5500	1
-4	28-5AMC	28C5750	1
-2	28-5MC	28C5500	1
-2	28-5MB	28C5500	1
-2	28-5MA	28C5500	1
-51	PBY-5B	28C5500	1
-53	PBY-5A	28C5564	1
-4	PBY-5A	28C5700	1
-3	PBY-5A	28C5700	1
-51	PBY-5	28C5006	1
-2	PBY-5	28C5000	1
-0	PBY-5	28C5000	1

C. NO38) 44 NAR-178-15
C. 91876 #90 & 346 & ON MCR #23

C. 88476 ONLY
C. #70496
C. #77713
C. 91876 #1-89 & 91-345
#1-#167

REQUIREMENTS PER AIRPLANE

REPLACES 28C5018 (11-29-39 B 3-1-40)
REPLACED BY
CALC. WT.
ADV. WT.

LIMIT ON DIMENSIONS UNLESS OTHERWISE DESIGNATED ± 1/8
SCALE None
STAMP PART NUMBER WHERE SHOWN

PART No.	STOCK	MATERIAL	SPEC.		LH REQ.	RH REQ.	LH REQ.	RH REQ.	LH REQ.	RH REQ.	LH REQ.	RH REQ.	LH REQ.	RH REQ.
PARTS ON SUB-ASSYS.					12	13	14	15	16	17	19	21	23	
AN155-46G														
AN155-46L														
-23	SUB-ASSY.													
-21	SUB-ASSYS													
-19														
-17														
-16														
-15														
-14														
-13														
-12	SUB-ASSY.													
28C6027													2	2
NAF 310621	-B6													
NAF 310621	-C6-CLASS 'C'													
NAF 310621	-L4GD-6RH-CLASS 'D'													
NAF 310621	-S4GD-6RH-CLASS 'D'													
NAF 310621	-L4GD-6LH-CLASS 'D'													
NAF 310621	-S4GD-6LH-CLASS 'D'													
Q6336-7														
AN960-516L													4	4
AN380-2-2														
AN320-5														
AN25-15														
-24	5/16x7x19x163	SHIELDED CABLE	ANRR-C-93											
-22	5/16x7x19x156	SHIELDED CABLE	ANRR-C-93											
-20	7/16x7x19x98 PREFORMED													
-11	5/16x7x19x500 PRESTRETCHED													
-10	5/16x7x19x500 PRESTRETCHED													
-9	5/16x7x19x500 PRESTRETCHED													
-8	5/16x7x19x500													
-7	5/16x7x19x150													
-6	7/16x7x19x98 PREFORMED	SHIELDED CABLE	ANRR-C-93											

PARTS LIST PER ASSY. — QTY. -0 | -2 | -3 | -4 | -51 | -53

AC		4-17-42	CW. Green C.S.
NAVY None.	NOTED	B. Standard	
HEAT TREAT	FINISH	DRAFT	CHECK STRUCT MAT APPROV. ENG.

NAME CABLE ASSEMBLY-RUDDER CONTROL

CONSOLIDATED AIRCRAFT CORP. SAN DIEGO, CALIF.

OPP. HAND

DWG. D. SIZE 28C5018

R 8106208

E.D.C.

LET	ALTERATION	DATE	BY
A	CHANGED DIM. ON DWG WAS "1/8" TO 1"	8-3-41	WHITE

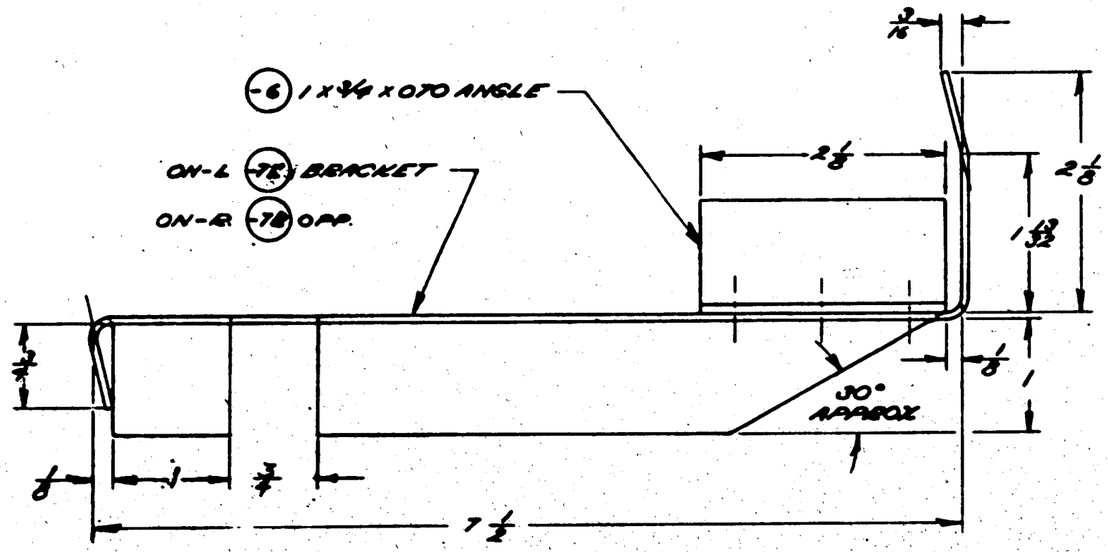

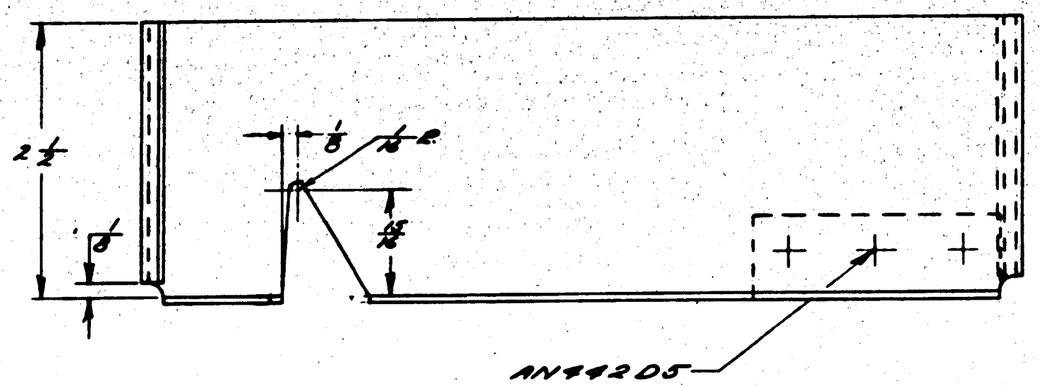

ALL BEND RADII & REFLIETS 1/16 R.

FINISH CODE

Z	ANODIC TREATMENT
P	P-27 PRIMER
AP	ALUMINIZED PRIMER
C	CADMIUM PLATE

ASSY. DASH No.	MODEL	NEXT ASSY.	REQ.
-R	PBY-5B	28C5010	1
-L	PBY-5B	28C5010	1
-R	28-5 MC	28C5010	1
-R	28-5 MA	28C5010	1
-R	28-5 ME	28C5010	1
-R	28-5 MN	28C5010	1
	28-5	28C5010	1
-R	PBY-5	28C5010	1
	PBV-5	28C5010	1

REQUIREMENTS PER AIRPLANE

REPLACES — GALS WT.

REPLACED BY — ASY. WT.

UNLESS OTHERWISE SPECIFIED ± 1/32 — SCALE 12"=1'0"

STAMP PART NUMBER WHERE SHOWN

ANPRES

PART No.	STOCK	MATERIAL	SPEC.	LH REQ.	RH REQ.	LH REQ.	RH REQ.	LH REQ.	RH REQ.	LH REQ.	RH REQ.	LH REQ.	RH REQ.
-7R	.090 X 3/8 X 10 1/2	24 ALCLAD T	AN470 CONS		1								
-7L	.090 X 3/8 X 10 1/2	24 ALCLAD T	AN470 CONS	1									
-8	K12BP X 2 1/4	24 ALCLAD T	AN426 CONS	1	1								

PARTS LIST PER ASSY.

-0	-2	-3	-4	-5

AC		1-6-40 R. Reynolds				
NAVY NONE	Z-P-AP.					
HEAT TREAT	FINISH	DRAFT	CHECK	STRUCT.	MAT.	APPROV	ENG.

NAME REINF.-CONTROLS-STA. 6.0 UPPER BRKT

CONSOLIDATED AIRCRAFT CORP. SAN DIEGO, CALIF.

OPP. HAND 28C5019-R

DWG. SIZE D

28C5019

LET	ALTERATION	DATE	BY

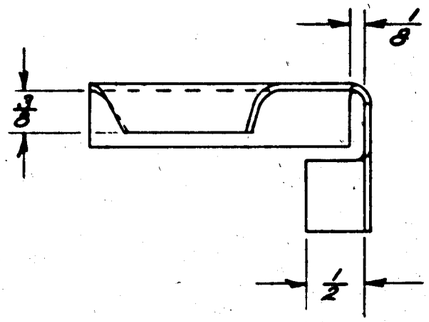

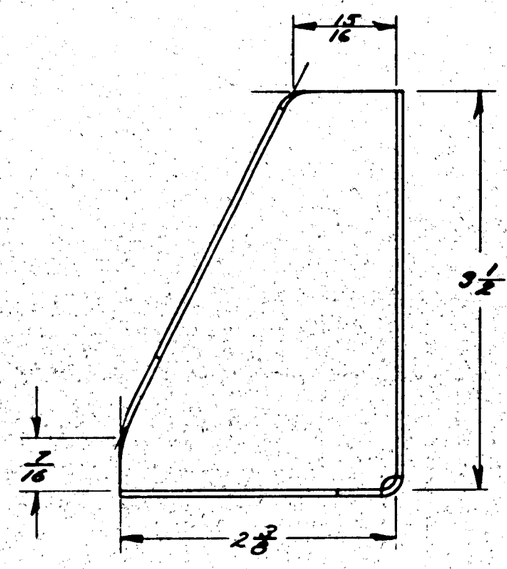

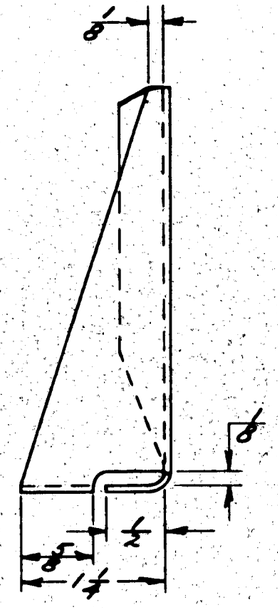

NOTE:
ALL BEND RADII & RELIEFS 1/8 R.

GP- GREEN PRIME

FINISH CODE	
Z	ANODIC TREATMENT
P	P-27 PRIMER
AP	ALUMINIZED PRIMER
C	CADMIUM PLATE

ASSY. DASH NO.	MODEL	NEXT ASSY	QTY.
	PBY-5A	28C2151	1
	PBY-5	28C2151	1

REQUIREMENTS PER AIRPLANE

REPLACES — CALC WT.

REPLACED BY — ACT. WT.

LIGHT OR SHOWDOWN VALUES NOT NECESSARY APPLIED: ± 1/32

SCALE: 12" = 1'-0"

STAMP PART NUMBER WHERE SHOWN

PART No.	STOCK	MATERIAL	SPEC.	LH REQ.	RH REQ.	LH REQ.	RH REQ.	LH REQ.	RH REQ.	LH REQ.	RH REQ.	LH REQ.	RH REQ.
PARTS LIST PER ASSY.				-0		-2		-3		-4		-5	
	.051 x 4 1/4 x 4 1/4	24 ALCLAD	7178 CONDT										

AC		6-12-39	BAP				3	
NAVY NONE	Z-P-2 GP	Approved 6-12-39			12/19/39			
HEAT TREAT	FINISH	DRAFT	CHECK	STRUCT.	MAT.	APPROV.	ENG.	

NAME BRKT - CONTROLS - A.F.C. REMOTE CONTROL

OPP. HAND

CONSOLIDATED AIRCRAFT CORP. SAN DIEGO, CALIF.

SIZE D

28C5021

LET	ALTERATION	DATE	BY

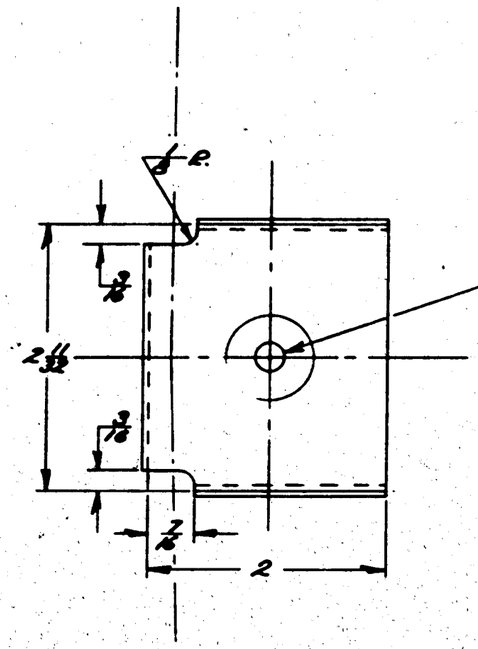

DIMPLE 3/4 I.D. X 1/16 DEEP
LINE DRILL "F" (.257) THRU

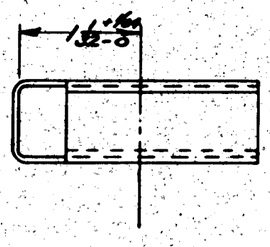

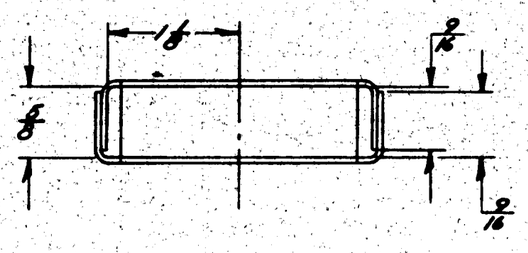

FINISH CODE	
Z	ANODIC TREATMENT
P	P-27 PRIMER
AP	ALUMINIZED PRIMER
C	CADMIUM PLATE

NOTE:
ALL BEND RADII 1/16 R

ASSY. DASH No.	MODEL	NEXT ASSY.	QTY.
	PBY-5B	28C5027	6
	PBY-5 NAF	28C5027	6
	PBY-5	28C5027	6

REQUIREMENTS PER AIRPLANE

REPLACES — CALC. WT.

REPLACED BY — ACT. WT.

LIMIT ON DIMENSIONS UNLESS OTHERWISE SPECIFIED: ± 1/64

SCALE 12" = 1'0"

STAMP PART NUMBER WHERE SHOWN

PART No.	STOCK	MATERIAL	SPEC.	LH REQ.	RH REQ.	LH REQ.	RH REQ.	LH REQ.	RH REQ.	LH REQ.	RH REQ.	LH REQ.	RH REQ.
	0.90 X 3 X 9	24 ALCLAD SHEET	9.7040 COND. T										
PARTS LIST PER ASSY.				-0		-2		-3		-4		-5	

AC		1-9-40					
NAVY NONE	Z-P				1/10/40		
HEAT TREAT	FINISH	DRAFT	CHECK	STRUCT	MAT.	APPROV	ENG.

NAME BRACKET - CONTROLS RUD & EL STA. 5.75

OPP. HAND

CONSOLIDATED AIRCRAFT CORP. SAN DIEGO, CALIF.

DWG. SIZE D

28C5026

E.O. 38330

E.O. 38309A

LET	ALTERATION	DATE	BY
A	ANGLING CHANGED TO AN4-10(6)	2-24	MP
B	ADDED -501, ADDED SECTION A-A TO FACE OF DWG, ADDED AN442-AD4 TO FACE & TO BILL. WT. CHG.+.49 LB.	17-53	[illegible]
C	ON FACE, REMOVED -6 NOTE, "ALCOA DIE 56 KIZ88, 1.0 3/4" 0.D. TH'D W/M, REPLACED FOR -6, "KIZ88 X 13 1/2" L, AL. ALLOY EXT. 24ST. 4649 COND. T," & FOR -501, "K5401 X 10 3/8" L, AL. ALL. EXTR." WITH "NOTED" TO FACE, ADDED MAT. NOTES #1 & #2.- WT. CHG. -.191 LB.	6-17-53	LINDSAY CULVER
D	IN 5/16 DIA FOR -501 REPLACED 24 ST. WITH 14 ST. WT. CHG. -.341 LB.	12-10-53	[illegible]

FORWARD →

STA. 5.75

SKIN (REF)

3 PLACES | AN 210-3A, AN 4-10, AN 310-4, AN 380-2-2, Q 7008-A17-064 (A)

20 7/16 TO DECKLINE

20 5/8 TO DECKLINE

-6

TRIM OUT - STANDING LEG APPROX AS SHOWN APPROX 13 5/16 LONG 28C5026 3 REQ.

43 TO ℄ SHIP

(501) 10 1/4 LONG. LOCATE CENTRALLY OVER NOTCH. (B)

AN 442 D 4 12 PLACES 1/4 MIN. EDGE DIST

AN 442 D 6 3 PLACES THRU -6 & STRINGERS

VIEW F'WD. AT L.H. SIDE

AN 442-AD4 5 REQ. ON EACH SIDE OF NOTCH AT 3/4 SPACING TOTAL OF 10 REQ.

(B) AN-442-AD4 (2 REQ)

-6 (REF.)

STA. 5.75 (REF.)

SECTION A-A

(C) MATERIAL NOTE:

1. -6 MAY BE MADE FROM:
   (A) K1288 X 13 1/2, AL. ALL. EXTR., 24ST, 4649 COND. T,
   (B) Y-6-A17T X 13 1/2.
2. -501 MAY BE MADE FROM:
   (A) K5401 X 10 3/8, AL. ALL. EXTR., 46A9-T, OR
   (B) Y-2-A28T X 10 3/8.

FINISH CODE	
Z	ANODIC TREATMENT
P	P-27 PRIMER
AP	ALUMINIZED PRIMER
C	CADMIUM PLATE

C-91876

R	PBY-5	28C5006	1
	PBY-5	28C5006	1
R	28SMN	28C5500	1
	28SMN	28C5500	1
R	28SME	28C5600	1
	28SME	28C5500	1
R	28SMC	28C5500	1
	28SMC	28C5500	1
R	28SMA	28C5500	1
	28SMA	28C5500	1
R	PBY-5B	28C5500	1
	PBY-5B	28C5500	1
R	28-SMF	28C5500	1
	28-SMF	28C5500	1
R	PBY-6	28C6000	1
	PBY-5	28C6000	1

C-70496

ASSY DASH NO.	MODEL	NEXT ASSY	REQ

REQUIREMENTS PER AIRPLANE

REPLACES

REPLACED BY

CALC WT.

ACT. WT.

LIMIT OR DIMENSIONS UNLESS OTHERWISE SPECIFIED ± .152

SCALE 6"=1'-0"

STAMP PART NUMBER WHERE SHOWN

PART No.	STOCK	MATERIAL	SPEC.	LH REQ. -0	RH REQ. -2	LH REQ. -3	RH REQ. -4	LH REQ. -5	RH REQ.
AN442-AD4									
				6	6				
				3	3				
				3	3				
				3	3				
				3	3				
28C5026				3	3				
-501	NOTED	NOTED	NOTED	1	1				
-6	NOTED	NOTED	NOTED	1	1				

PARTS LIST PER ASSY.

A C		WLDG			
NAVY NONE	-6 Z-P	DRAFT	CHECK	STRUCT	MAT.
HEAT TREAT	FINISH				

NAME INSTALN-CONTROLS BRACKET STA 5.75

OPP. HAND 28C5027-AP

CONSOLIDATED AIRCRAFT CORP. SAN DIEGO, CALIF.

SIZE D

28C5027

LET	ALTERATION	DATE	BY
A	[illegible]	[illegible]	[illegible]
B	[illegible]	[illegible]	[illegible]
C	ADDED -9	[illegible]	[illegible]
D	ADDED NOTE	2-3-42	[illegible]
E	MATR'L FOR -8, 1¼ O.D. X .035 WAS 1¼ O.D. X .042. WT. CHG. NEG.	7-3-42	[illegible]
F	REMOVED 1.⁄ DIMS. ADDED 1⅜ & 3⅝ DIMS. R WAS 4 3⁄16 WT. CHG. NEG.	10-12-42	[illegible]

EO-30226

EO-A16403

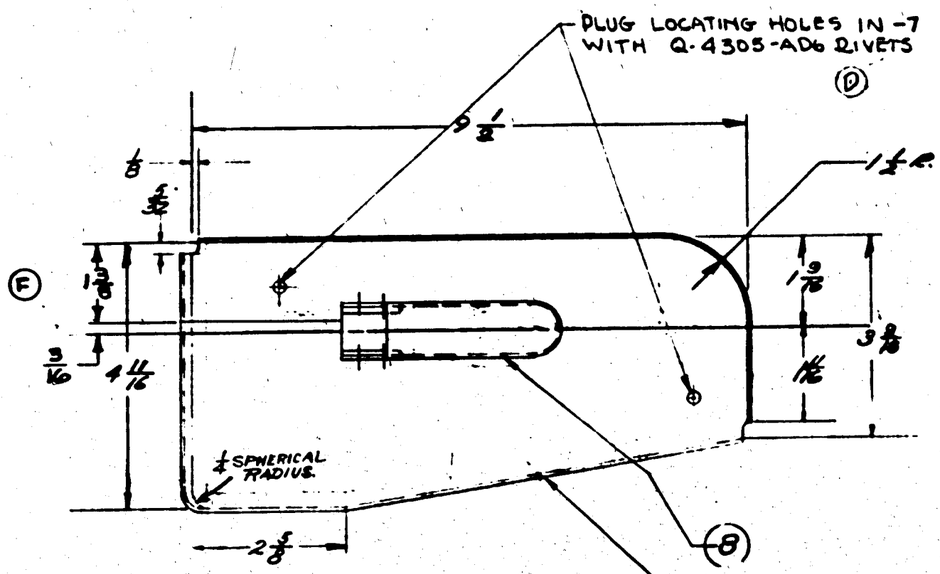

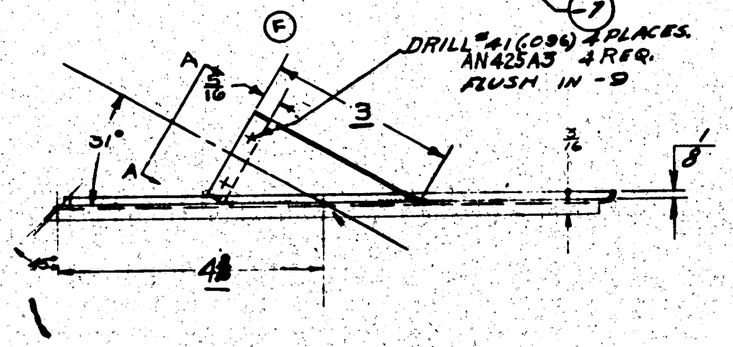

- CUT HOLE THRU -7 TO FIT I.D. OF -8

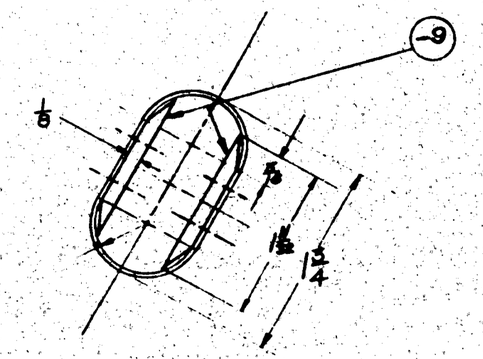

VIEW A-A
SCALE 12"=1'0"

NOTE:
BEND RADIUS 1/8 R RELIEF RADIUS 1/8 R
WELD -8 TO -7 AS SHOWN

GP-GREEN PRIME

FINISH CODE	
Z	ANODIC TREATMENT
P	P-27 PRIMER
AP	ALUMINIZED PRIMER
C	CADMIUM PLATE

ASSY DASH NO.	MODEL	NEXT ASSY	REQ.
	PBY-5A	28C5030	1
	PBY-5	28C5030	1

REQUIREMENTS PER AIRPLANE

REPLACES — CALC. WT.

REPLACED BY — ACT. WT.

UNLESS OTHERWISE SPECIFIED ± 1/32 — SCALE 6"=1'0" & NOTED

STAMP PART NUMBER WHERE SHOWN

Q-4305-AD6

AN425AD3 — 4

PART NO.	STOCK	MATERIAL	SPEC.	LH REQ. -0	RH REQ. -0	LH REQ. -2	RH REQ. -2	LH REQ. -3	RH REQ. -3	LH REQ. -4	RH REQ. -4	LH REQ. -5	RH REQ. -5
-8	1¼ O.D. X .035 WALL	ANNEAL	[illegible]									2	
-8	1¼ O.D. X .035 WALL	ANNEAL	[illegible]										1
-7	.090 X 5" I.D.	[illegible]	[illegible]									1	
-9													

PARTS LIST PER ASSY.

AC		GP							
NAVY NONE		Z-P-2							
HEAT TREAT		FINISH	DRAFT	CHECK	STRUCT	MAT.	ENGR.	ENG.	

NAME LEADOUT - A.F.C. COVER CABLE

CONSOLIDATED AIRCRAFT CORP. SAN DIEGO, CALIF.

OPP. HAND

SHEET D SIZE — 28C5031

LET	ALTERATION	DATE	BY
A	HOLES ADDED	11-18-42	[illegible]
B	8 3/4 DIM. WAS 8 5/8	"	"

E.O. 24209A

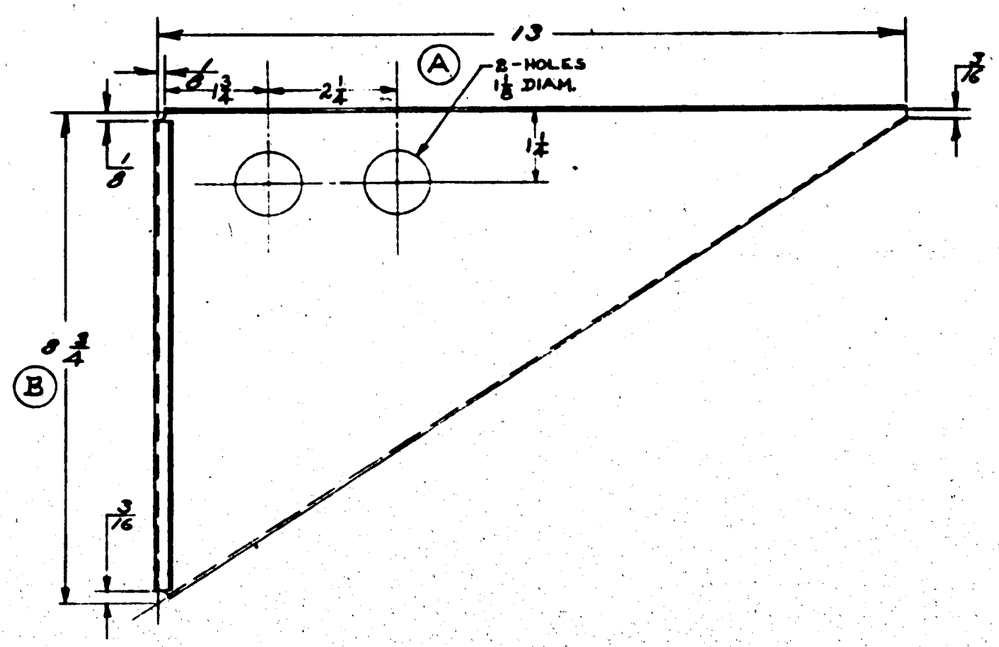

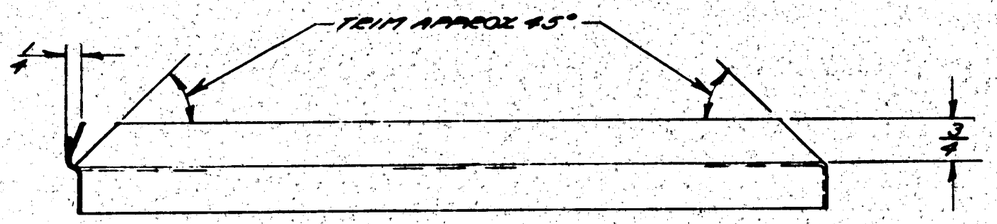

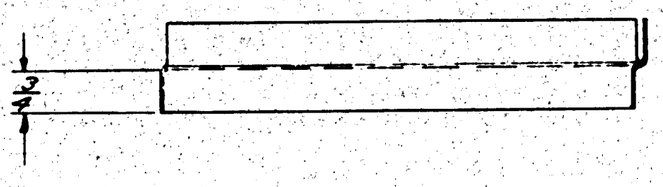

GP-GREEN PRIME

CODE	
Z	ANODIC TREATMENT
P	P-27 PRIMER
AP	ALUMINIZED PRIMER
C	CADMIUM PLATE

NOTE:
ALL BEND RADII 1/16 R.

ASSY. DASH No.	MODEL	NEXT ASSY	REQ
	PBY-5A	28C5030	1
	PBY-5	28C5030	1

REQUIREMENTS PER AIRPLANE

REPLACES — Calc. Wt.

REPLACED BY — Act. Wt.

Light as Dimensions Unless Otherwise Specified ± 1/32 — SCALE 6"=1'0"

STAMP PART NUMBER WHERE SHOWN

PART No.	STOCK	MATERIAL	SPEC.	LH REQ.	RH REQ.	LH REQ.	RH REQ.	LH REQ.	RH REQ.	LH REQ.	RH REQ.	LH REQ.	RH REQ.
PARTS LIST PER ASSY.	C32 X	ALCLAD	49A@ CON'T.	-0		-2		-3		-4		-5	
				1									

AC		3-19-42					
NAVY NONE	Z-P-2 GP	APP'D					
HEAT TREAT	FINISH	DRAFT	CHECK	STRUCT	MAT.	APPROV	ENG.

NAME FILLER - A.F.C. COVER

OPP. HAND

CONSOLIDATED AIRCRAFT CORP. SAN DIEGO, CALIF.

SIZE D — DWG. 28C5032

LET	ALTERATION	DATE	BY
A	[illegible]	9-15-41	[illegible]
B	CREATED -7. IN REQ'D A' PLANE. BLK. LIMITED -7 PBY-5 N.A. 28C-5022 TO [illegible] -6 PBY-5 TO [illegible]-80 WT. CHG. NEG.	10/3/42	FUNK
C	IN MATERIAL LIMITED:- PBY-5A, C [illegible] MCR 2031 TO MCR 2031-A, WAS MCR 2031 & ON. PBY-5, C [illegible] TO MCR 1014-A, WAS [illegible] & ON. NO WT CHG.	4-14-43	[illegible]

P.S.C.ª 5881
E.O.A 5082.5

MCR 101-A
& 803-A

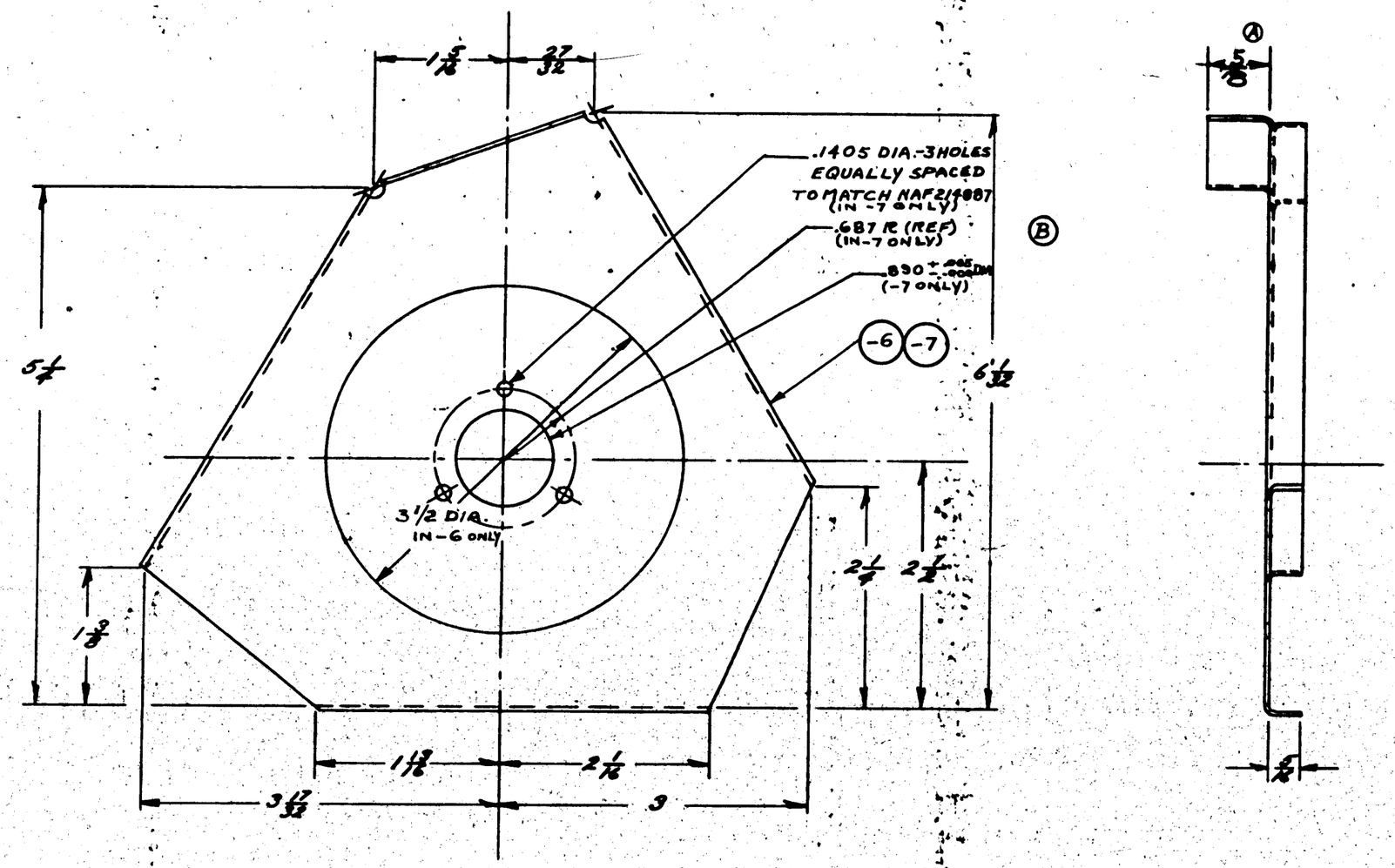

NOTE
ALL BEND RADII 1/16 R

C	C 710 [illegible] 464, MCR 2031 TO MCR 2031-A			
C	C 3876 "31 TO MCR 1014-A			
C	C 7771 3, " 6847 6, " 7043 6			
C	VC 7D 4566 } 31-80			
C	F 9187 C }			
-7	PBY-5A	28C 5022	1	
-7	PBY-5	28C 5022	1	
-6	PBY-5A	28C 5022	1	
-6	PBY-5	[illegible]	1	

ASSY. DASH No.	MODEL	NEXT ASSY.	REQ.

REQUIREMENTS PER AIRPLANE

REPLACES — CALC. WT.

REPLACED BY — ACT. WT.

UNIT OR DIMENSIONS UNLESS OTHERWISE SPECIFIED — SCALE 12"=1'0"

STAMP PART NUMBER WHERE SHOWN

PART No.	STOCK	MATERIAL	SPEC.	LH REQ.	RH REQ.	LH REQ.	RH REQ.	LH REQ.	RH REQ.	LH REQ.	RH REQ.	LH REQ.
-7	.040 X 10 X 10	ALCLAD 24ST	47A6-T									
-6	.040 R-40 x 10	[illegible]	[illegible]									

PARTS LIST PER ASSY. -0 -2 -3 -4 -5

AC		3-3-42					
NAVY [illegible]	E-P-ASP	2-					
HEAT TREAT	FINISH	DRAFT	CHECK	STRUCT.	MAT.	APPROV.	ENG.

NAME BRACKET - A.P.C. CONTROL		OPP. HAND	
CONSOLIDATED AIRCRAFT CORP. San Diego, Calif.		SIZE D	28C 5033

GP-GREEN PRIME CODE

Z	ANOD.C TREATMENT
P	P-27 PRIMER
AP	ALUMINIZED PRIMER
C	CADMIUM PLATE

LET	ALTERATION	DATE	BY
A	ADDED -7, -8, & -9	5-2-46	Approved
B	ADDED CUTOUT ON ONE END	9-17-46	Approved

PBY-5 — BD. 24516

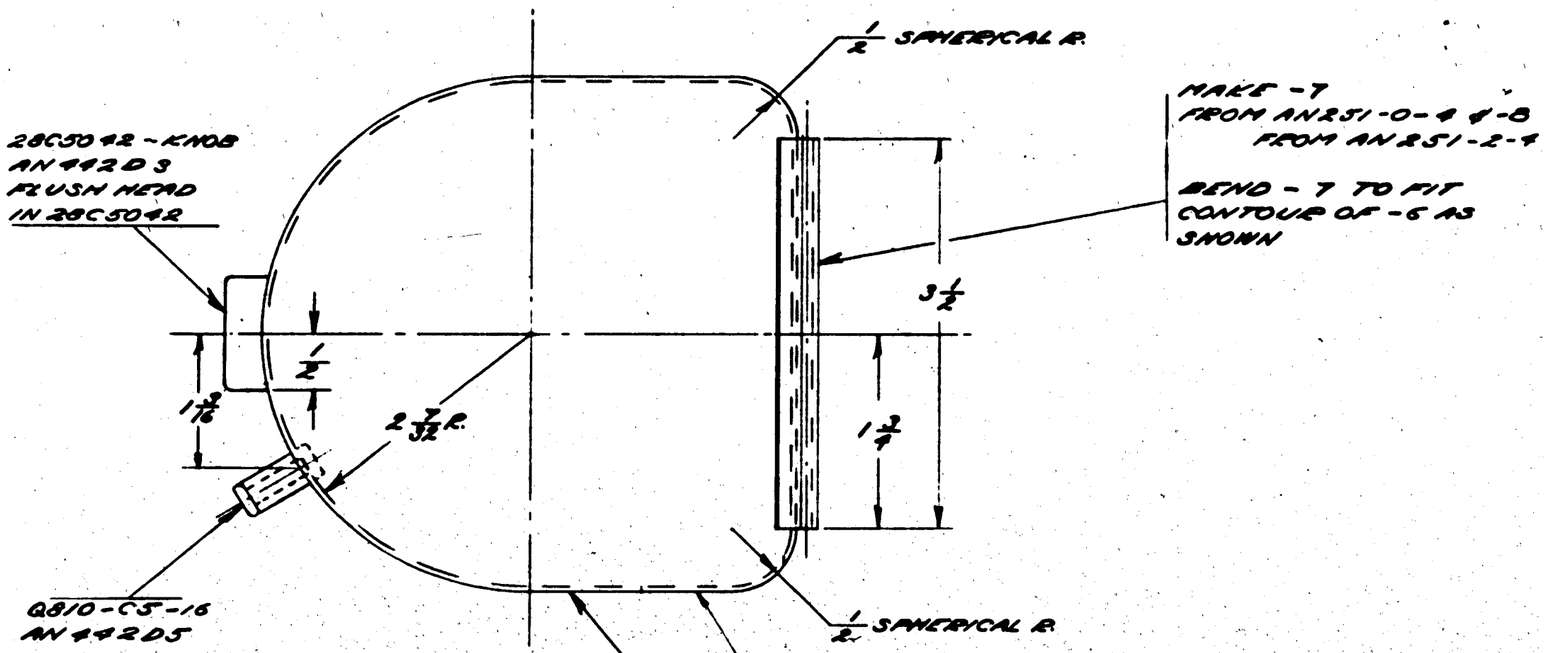

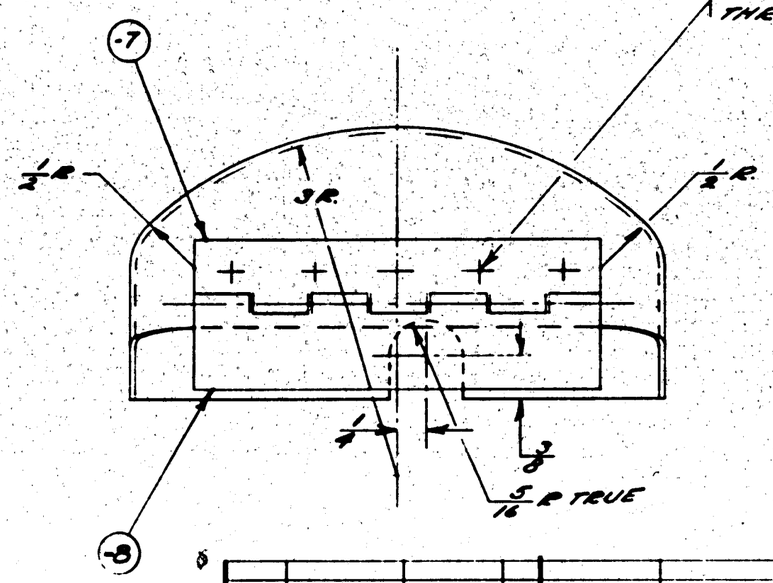

GP-GREEN PRIME
FINISH CODE

Z	ANODIC TREATMENT
P	P-27 PRIMER
AP	ALUMINIZED PRIMER
C	CADMIUM PLATE

ASSY. DASH NO.	MODEL	NEXT ASSY	QTY.
	PBY-5A	28C5022	1
	PBY-5	28C5022	1

REQUIREMENTS PER AIRPLANE

REPLACES — CALC. WT.

REPLACED BY — ACT. WT.

LIGHT ON DIMENSIONS UNLESS OTHERWISE SPECIFIED + 1/32 — SCALE 12" = 1'0"

STAMP PART NUMBER WHERE SHOWN

PART No.	STOCK	MATERIAL	SPEC.	LH REQ. -0	RH REQ. -0	LH REQ. -2	RH REQ. -2	LH REQ. -3	RH REQ. -3	LH REQ. -4	RH REQ. -4	LH REQ. -5	RH REQ. -5
-7	.090D. x 3/8	CRES ANGLE SPEC. 22W13 COND H		1									
-8	MAKE FROM AN851-2-4			1									
28C5040-7	MAKE FROM AN851-0-4							1					
28C5042				1									
Q810-C5-16										1			
AN442D5													
AN442D4													
-9	.090R x 1/2 H12	ALCLAD 24S-T3 SHEET	QQ-A-268 COND A	1									

PARTS LIST PER ASSY.

AC							
NAVY-6	-6 2-P-2 GP						
HEAT TREAT	FINISH	DRAFT	CHECK	STRUCT.	MAT.	APPROV.	ENG.

NAME COVER - A.F.C. CONTROL

CONSOLIDATED AIRCRAFT CORP. SAN DIEGO, CALIF.

OPP. HAND

SIZE D — 28C5040

LET	ALTERATION	DATE	BY
A	ADDED HOLES FOR CUTOUT AS SHOWN		
B	CUTAWAY ADDED		
C	ADDED 1/16 DIM. REMOVED 1/16 DIM. FROM SLOT TO OUTER EDGE		
D	SHEET ADDED TO SHOW ADDITIONAL CUTOUT IN -6.		
E	REMOVED DIMS. (4 1/2) (2 3/8), (2 3/16) (1), & AN442 DS (2) FROM FACE. REMOVED -8 FROM FACE & D/M. ADDED DETAIL OF -9, DIMS. (C), (4) (2 1/2) (3/4), (1), (4 3/16) & "CUT OUT" TO FACE. ADDED -9, AN442 D4 (4) & AN364 DF 1032 (1) TO FACE & D/M. BROUGHT REQ PER AIRPLANE COL. UP TO DATE		
F	-10 REPLACES -7 (1) ON R.H. SIDE & REMOVED NOTE "VIT" THESE SLOTS TO BE LOCATED ON FIRST INSTALLATION.		
G	ADDED CUTOUT 2 1/4 DIM. 4 5/16 DIM. WAS 3 1/16, 1/4 DIM. WAS 1/8, 7/32 DIM. WAS 5/16 & 9/32 DIM. WAS 5/16. ADDED TWO #10 (193) HOLES & LOCATING DIMS. NEG. INT. CHG.		

E.O. "LL 174 PBY5, E.O. 31070

PBY5, 406 SK, E.O. 38407

PBY-5A, 0A-10 E.O. A774

E.O.C. "SB 23

(E) DETAIL OF -9
12" = 1'-0"

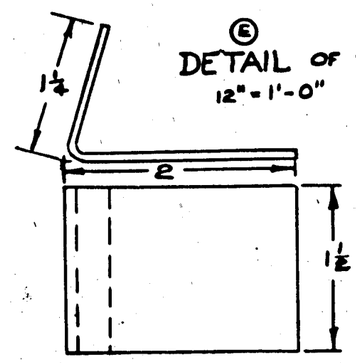

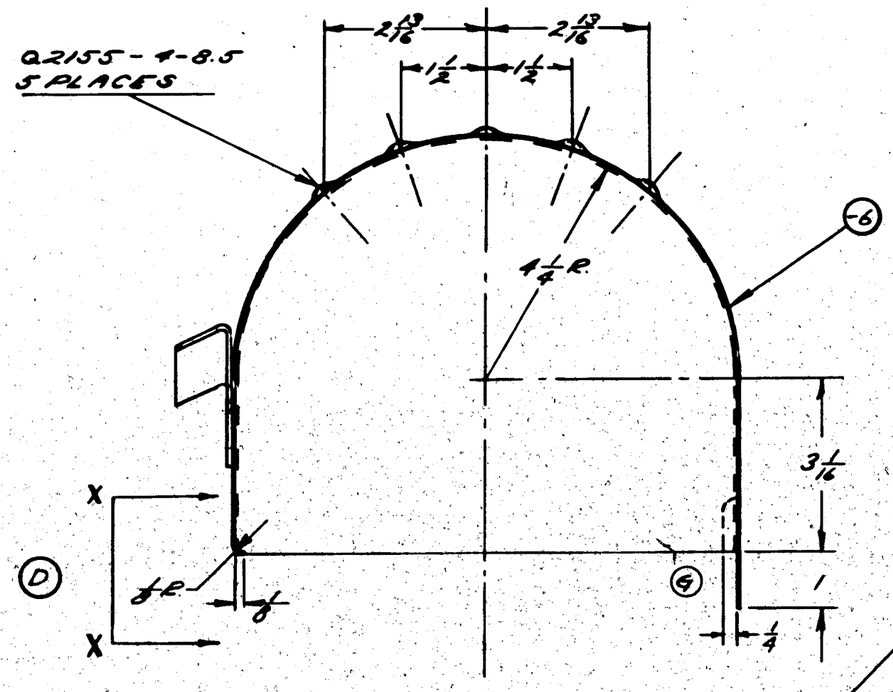

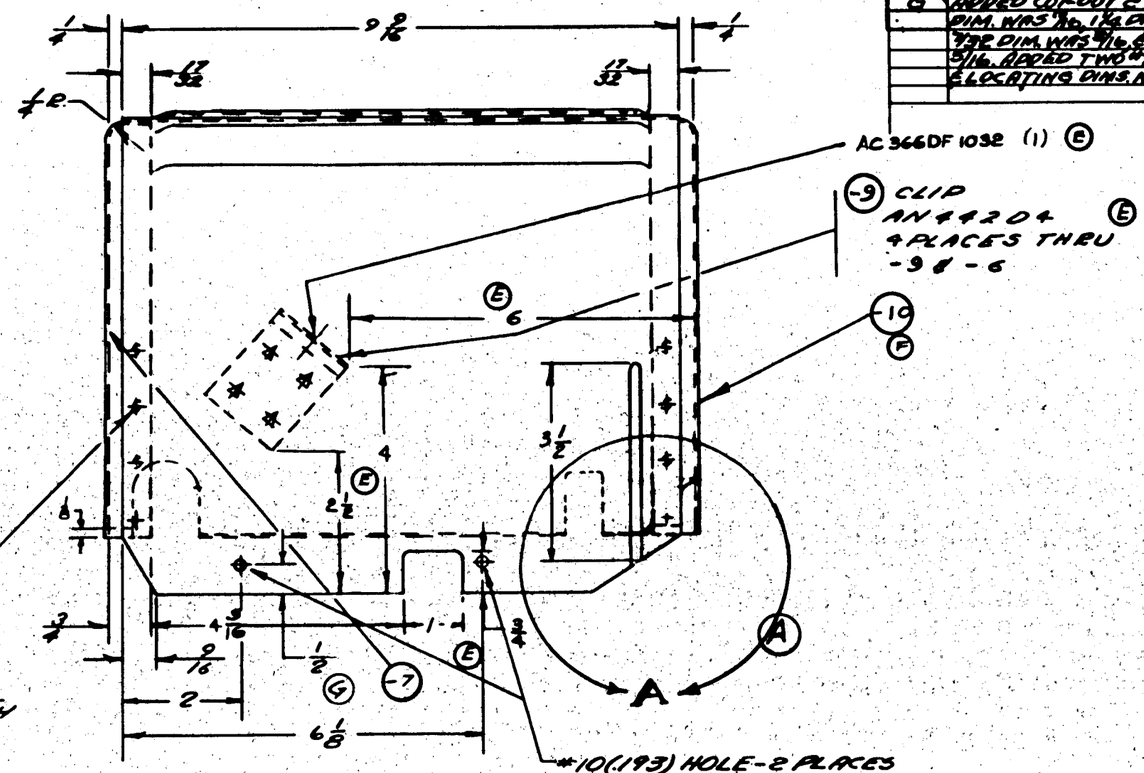

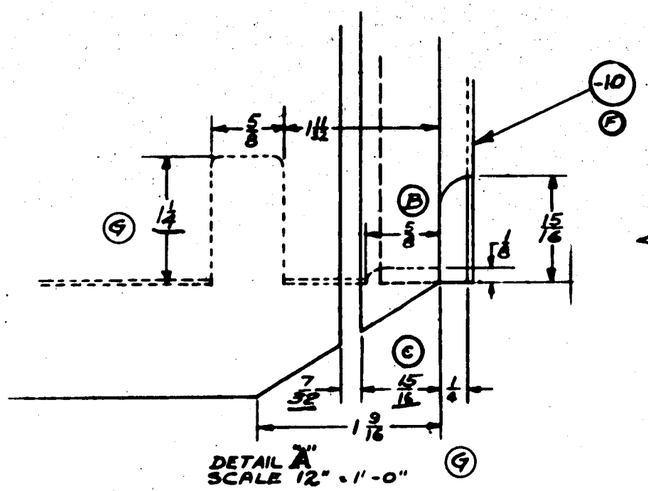

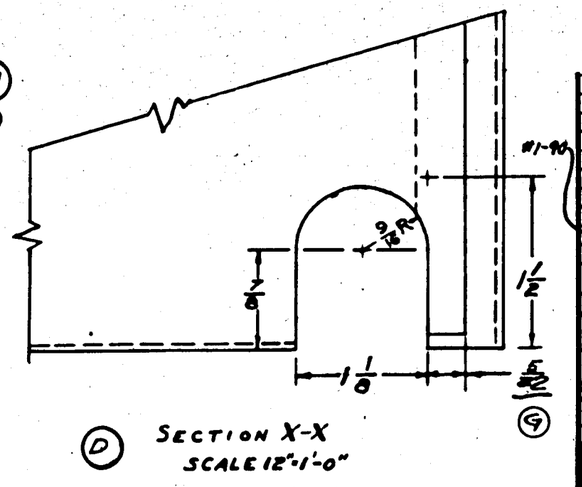

FINISH CODE

Z	ANODIC TREATMENT
P	P-37 PRIMER
AP	ALUMINIZED PRIMER
C	CADMIUM PLATE

ASSY. DASH NO.	MODEL	NEXT ASSY.	REQ.
-9	PBY-5A	28F2169	1
	PBY-5A	REC5043	1
	ADV-5	ARC5043	1

REQUIREMENTS PER AIRPLANE

REPLACES — CALC. WT.

REPLACED BY — ACT. WT.

LIGHT OR SHOWDOWN SHELVES DIMENSIONS SHOWN — SCALE 3"/1'0" E — 1/2 AP — NOTED

STAMP PART NUMBER WHERE SHOWN

PART NO.	STOCK	MATERIAL	SPEC.	LH REQ.	RH REQ.	LH REQ.	RH REQ.	LH REQ.	RH REQ.	LH REQ.	RH REQ.
PARTS LIST PER ASSY.				-0		-2		-3		-4	
-10	.040 x 12 x 6	AL. AL. 2024 ALCLAD	47A8-"A"	1							
	AC 366 DF 1032					1					
	AN 442 D4							4			
-9	3 1/4 x 1 1/2 x .064	ALC. SHT. 24ST						1			
-7	.040 x 12 x 6	AL. ALLOY 2024 ALCLAD SHEET	47A8 CONDA	1							
-6	.040 x 12 x 24	AL. ALLOY 2024 ALCLAD SHEET	47A8 CONDA	1							

AC — NAVY — HEAT TREAT — Z-P-ZAP — FINISH

DRAFT	CHECK	STRUCT.	MAT	APPROV.	ENG.

NAME COVER - RUDDER A.F.C. UNIT

CONSOLIDATED AIRCRAFT CORP. SAN DIEGO, CALIF.

OPP. HAND

DWG. SIZE D — 28C5044

R

E.O. 35741

LET	ALTERATION	DATE
A	10 1/2 DIM. CHGS. TO 10 9/16. ADDED 3/8 DIAGONAL AND 10 11/16 DIM. TO FACE OF DRW'G.	4/10/41
B	1/2 DIM. WAS 9/16 IN SECT. A-A	12/5/41

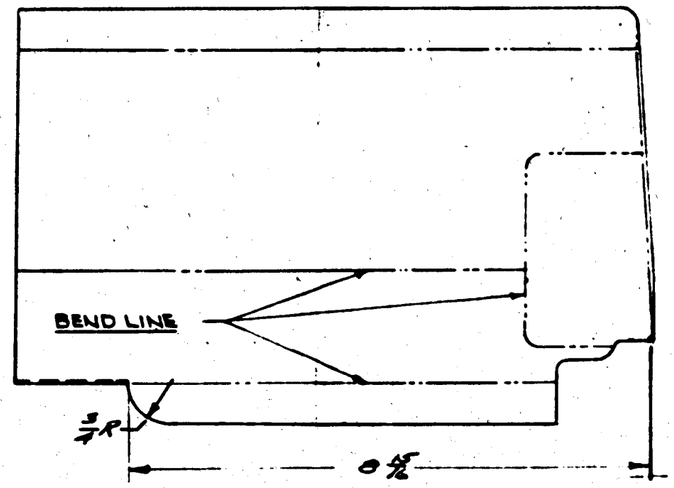

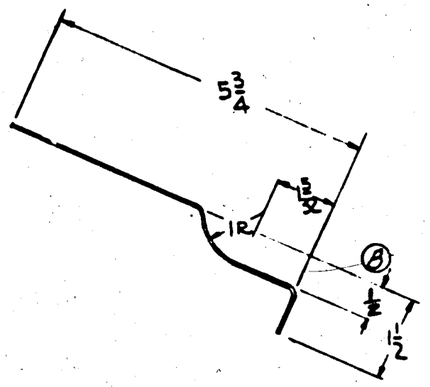

SECTION A-A

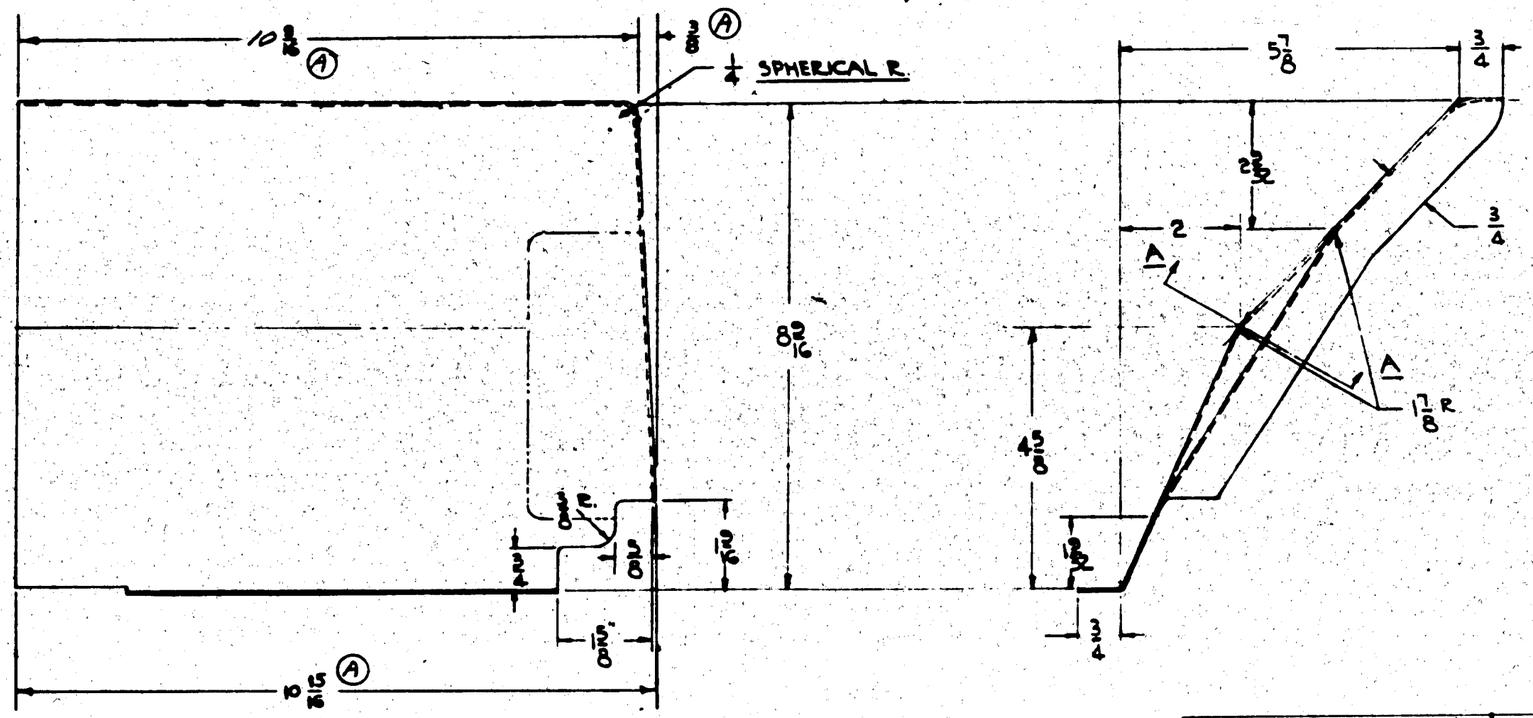

NOTE:
ALL RADII 1/8 UNLESS OTHERWISE NOTED.

GP-GREEN PRIME

FINISH CODE	
Z	ANODIC TREATMENT
P	P-37 PRIMER
AP	ALUMINIZED PRIMER
C	CADMIUM PLATE

ASSY. DASH NO.	MODEL	NEXT ASSY	REQ
	PBY-5A	28C5030	1
	PBY-5	28C5030	1

REQUIREMENTS PER AIRPLANE

REPLACES — CALC WT.

REPLACED BY — ACT WT.

LIGHT OR SHOTBLASTING UNLESS OTHERWISE DIMENSIONED +1/32 — SCALE 6"=1'-0"

STAMP PART NUMBER WHERE SHOWN

PART NO.	STOCK	MATERIAL	SPEC.	W.P.	LH REQ.	RH REQ.	LH REQ.	RH REQ.	LH REQ.	RH REQ.	LH REQ.	RH REQ.	LH REQ.	RH REQ.
	.040 x 15 A16	AL. ALLOY ALCLAD 24S	47AB CONDA		-0		-2		-3		-4		-5	

PARTS LIST PER ASSY.

AC — NAVY 3R33 AFTER FINISHING — HEAT TREAT — FINISH: Z.-P.-2 GP

	DRAFT	CHECK	STRUCT.	MAT.	APPROV.	ENG.
11-14-40						
C NUMBER					9-1-42	

NAME PLATE - A.F.C. COVER AFT ACCESS.

OPP. HAND

CONSOLIDATED AIRCRAFT CORP. SAN DIEGO, CALIF.

DWG. SIZE D — 28C5045

LET	ALTERATION	DATE	BY

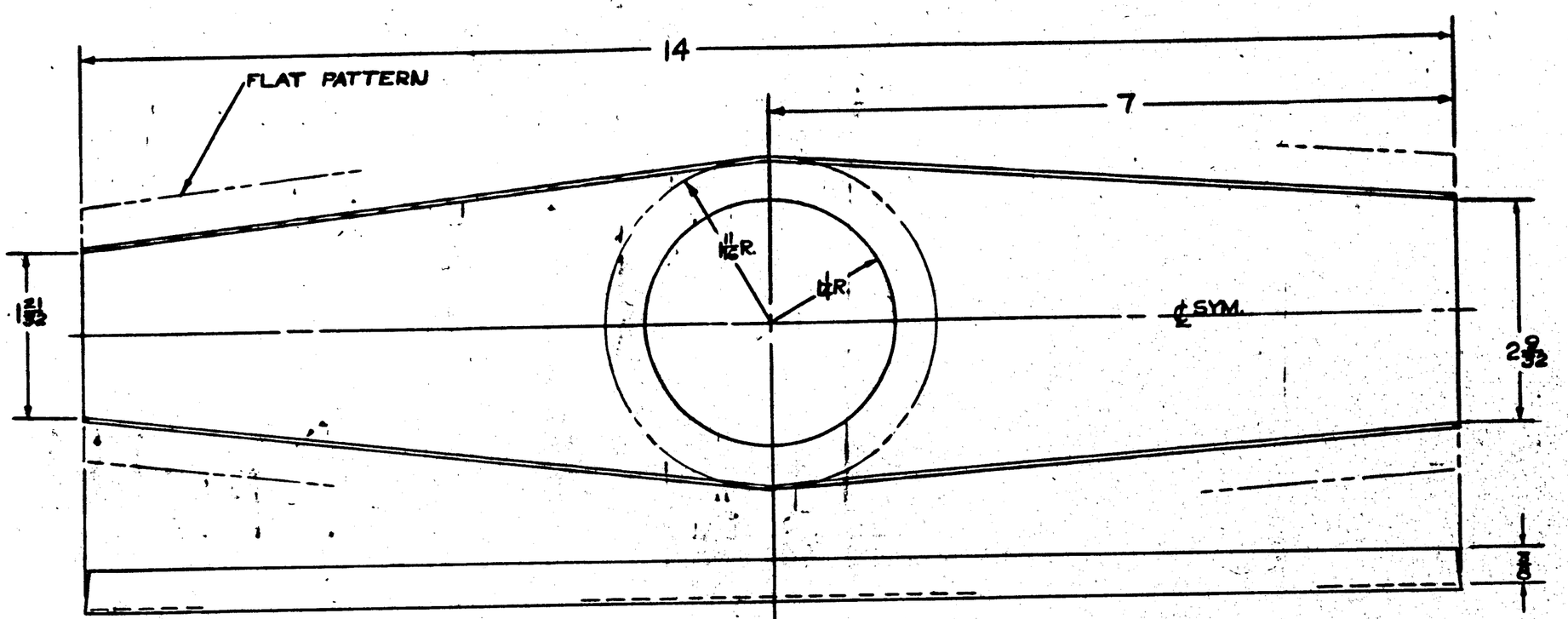

ALL BEND RADII 1/8

ASSY. DASH NO.	MODEL	NEXT ASSY.	REQ.
	28-3AMJ	28C065	2
	PBY-5B	28C065	2
	PBY-5A	28C065	2
	PBY-5	28C065	2

REQUIREMENTS PER AIRPLANE

REPLACES .237 CALC WT.

REPLACED BY ACT. WT.

UNLESS OTHERWISE SPECIFIED ±1/32 SCALE 12"-1'0"

STAMP PART NUMBER WHERE SHOWN

PART No.	STOCK	MATERIAL	SPEC.
	.051 X 4 1/4 x 4 1/4	2SOAL-H	47A10-A

PARTS LIST PER ASSY.

LH REQ.	RH REQ.	LH REQ.	RH REQ.	LH REQ.	RH REQ.	LH REQ.	RH REQ.	LH REQ.	RH REQ.
-0		-2		-3		-4		-5	

AC —— | —— | 1-31-42 LAYOUT | DESIGN 8-11-42 GERBER | | PATENT 8-13-42

NAVY SR-53 | ZF-28-006 | DRAFT | CHECK | STRUCT | VEZ | MAT | APPROV | ENG.

HEAT TREAT | FINISH

NAME STIFFENER -AILERON CONTROL LEVER

OPP. HAND NONE

CONSOLIDATED AIRCRAFT CORP. SAN DIEGO, CALIF.

DWG. SIZE D

28C5081

R

LET	ALTERATION	DATE	BY

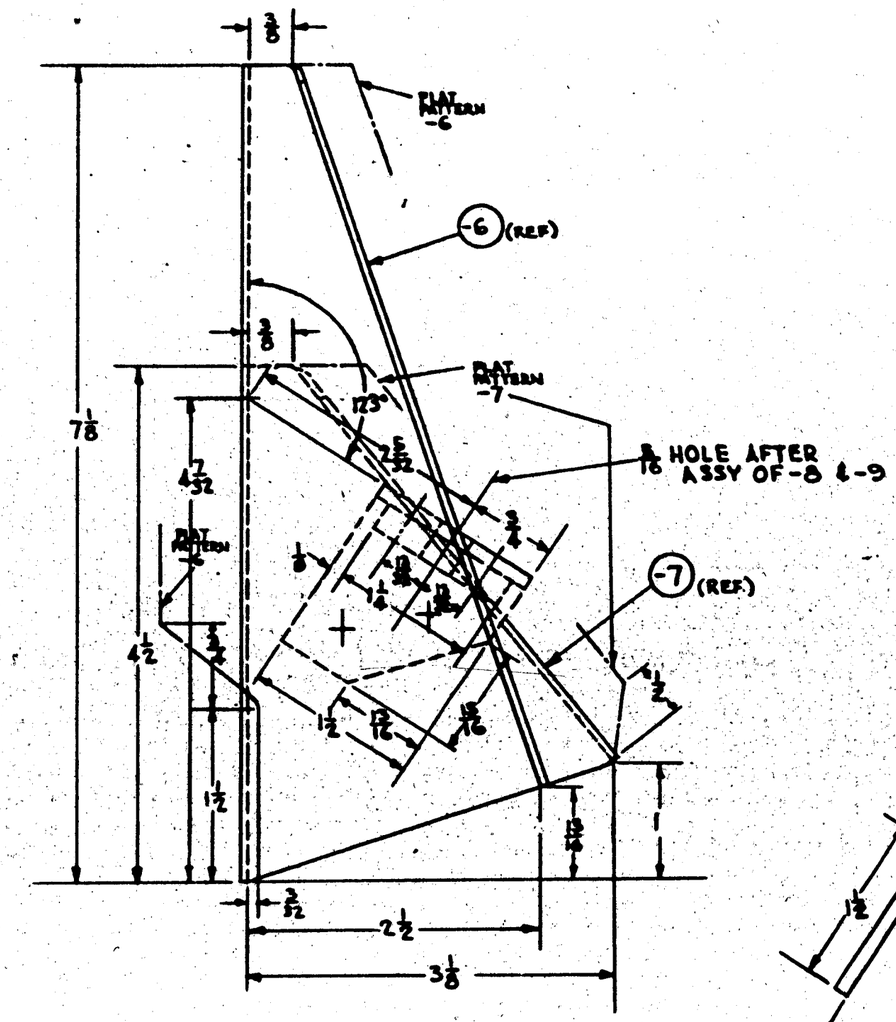

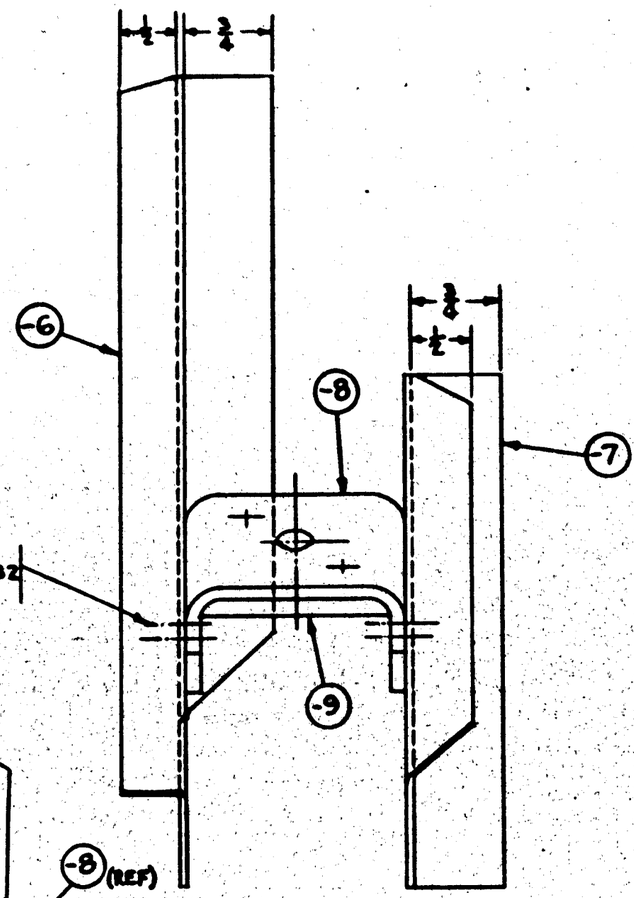

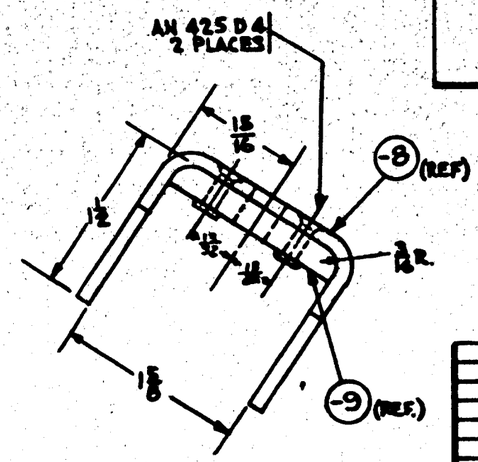

SERIAL	TITLE	189 SHIPS
7853	11303	
07873	07008	
08000	08005	
08278	08048	
08288	08017	
08385	04401	

RUSH RELEASED 4-4-42.

FINISH CODE	
Z	ANODIC TREATMENT
P	P-27 PRIMER
AP	ALUMINIZED PRIMER
C	CADMIUM PLATE

ASSY. DWG. NO.	MODEL	NEXT ASSY.	QTY.
	PBY-5A	28C5089	1

REQUIREMENTS PER AIRPLANE

REPLACES — SHIP NO.

REPLACED BY — ADD. SHIP NO.

CUT TO ASSEMBLE OVER + 1/32 — SCALE 10" = 1'-0"

AN426 D4
AC372-1032
AN3-5A

PART NO.	STOCK	MATERIAL	SPEC.									
	PARTS LIST PER ASSY.			LH RH REQ.	LH RH REQ.	LH RH REQ.	LH RH REQ.	LH RH REQ.	LH RH REQ.	LH RH REQ.	LH RH REQ.	LH RH REQ.
				-0	-2	-3	-4	-5				
-5	3/4 x 1 3/16 x 1 1/2	ALCLAD SHT	47B8T	1								
-6	1 1/2 x 4 3/4 x 1 3/4	ALCLAD SHT	47ART	1								
-7	.064 x 4 3/4 x 4 5/8	ALCLAD SHT	47ART	1								
-8	.064 x 7 7/8 x 4 5/8	ALCLAD SHT	47ART	1								

AC		3-30-42		DRAFTSMAN		ALTERED	ALTERED
NAVY —	2P	4-1-42				4-7-42	
HEAT TREAT	FINISH	DRAFT	CHECK	STRUCT	MAT	APPROV	ENGR.

NAME: BRACKET ASSY - CONT. RUDDER AFC PULLEY - FWD

CONSOLIDATED AIRCRAFT CORP. SAN DIEGO, CALIF.

OPP. HAND —

DWG. D — 28C5089

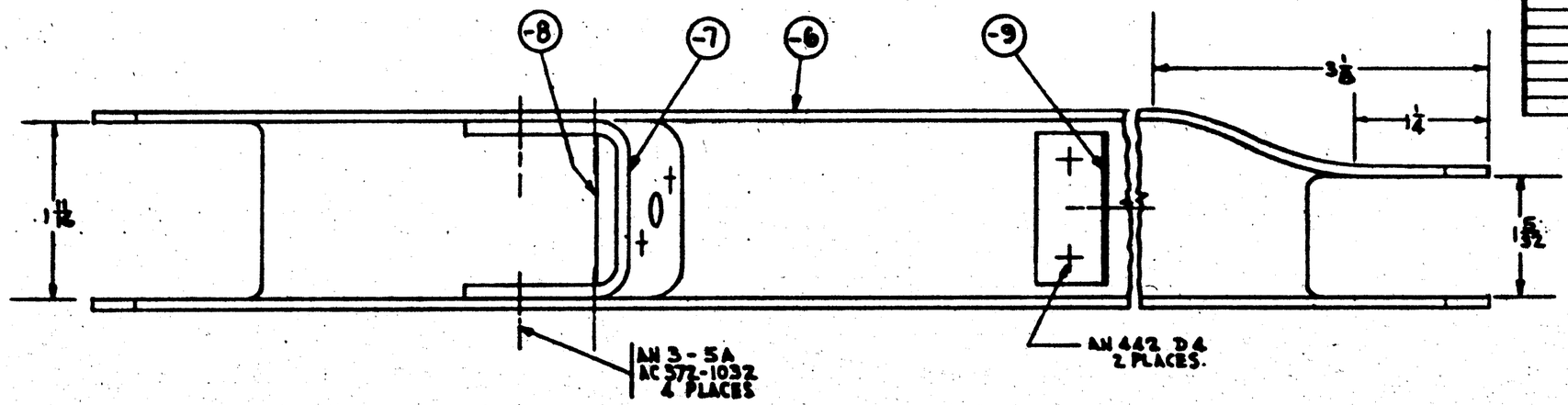

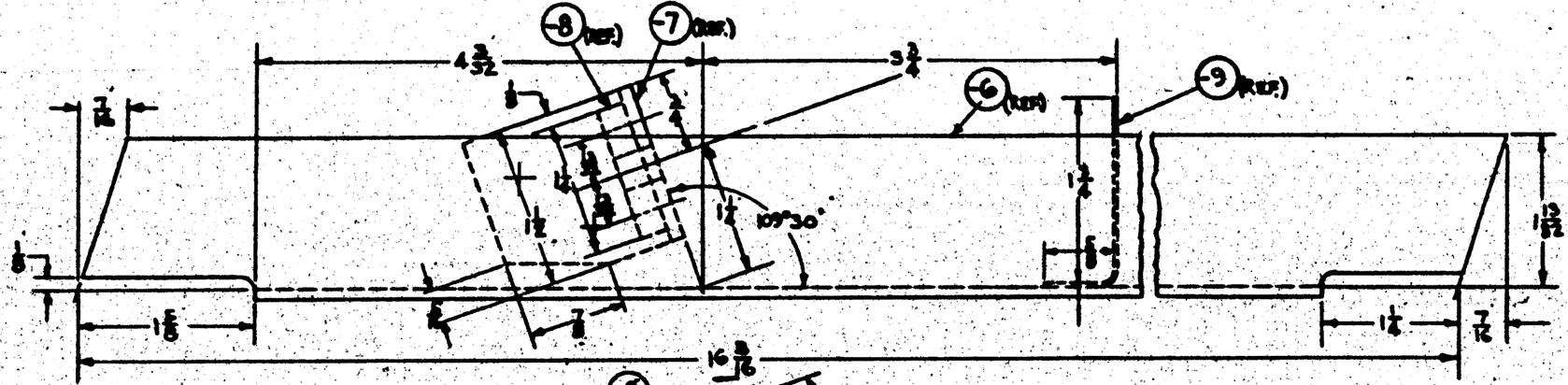

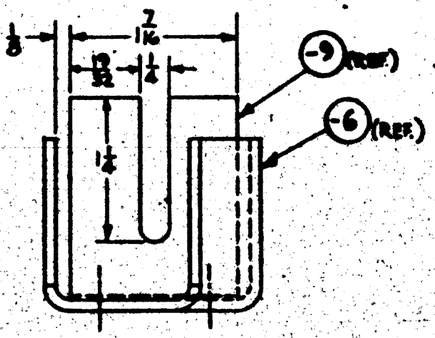

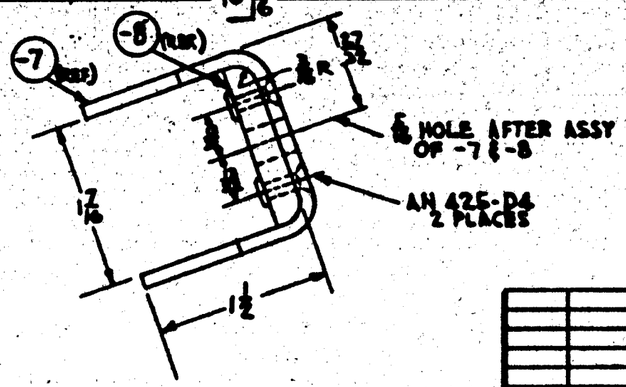

RUSH RELEASED 4-4-42

FINISH CODE

Z	[redacted]
P	R-9 PRIME
AP	[redacted]
C	CORROSION PLATE

AN4234
AN4235

AC 572-1032
AN 3 - 5A

PART No.	STOCK	MATERIAL	SPEC.	-0	-2	-3	-4	-5
-3	[redacted]	ALCLAD 24ST	47A8T.	1				
-2	[redacted]	ALCLAD 24ST	47A8T.		1			
-3	[redacted]	ALCLAD 24ST	47A8T.			1		
-4	[redacted]	ALCLAD 24ST	47A8T.				1	

PARTS LIST FOR ASSY.

PEYSA [redacted]
ASSY. SERV. No. | MODEL | NEXT ASSY. | QTY.
REQUIREMENTS FOR AIRPLANE
REPLACES | Engs. Wt.
REPLACED BY | Adv. Wt.
SCALE 12" = 1'-0"

A.C. | NAVY — | HEAT TREAT | Z P | FINISH | 5-30-42 | PLANO | DRAFT | STRESS | STRUCT | MAT | APPROV | ENG.

NAME BRACKET ASSY - CONT. - RUDDER AFC PULLEY - AFT.
CONSOLIDATED AIRCRAFT CORP. San Diego, Calif.
OPP. HAND —
DWG. D 28C5090

E.O. A89631

LET	ALTERATION	DATE	BY
A	CHGD ATTACHMENT OF -6, 24° WAS 18° NO WT. CHG.	12-17-41	[illegible]
B	M.B/M, PER -6, REPLACED "K78J X 1, AL. AL. EXT., 46A9-T" WITH "NOTED" FOR -7, REPLACED "K78J X 2, AL. AL. EXT., 46A9-T" WITH "NOTED" & FOR -8, REPLACED "K1288 X 9¼, AL. AL. EXT. 46A9-T" WITH "NOTED." ADDED MAT'L. NOTES "1," "2," & "3." WT. CHG. REQ.	8-13-42	P. MAC

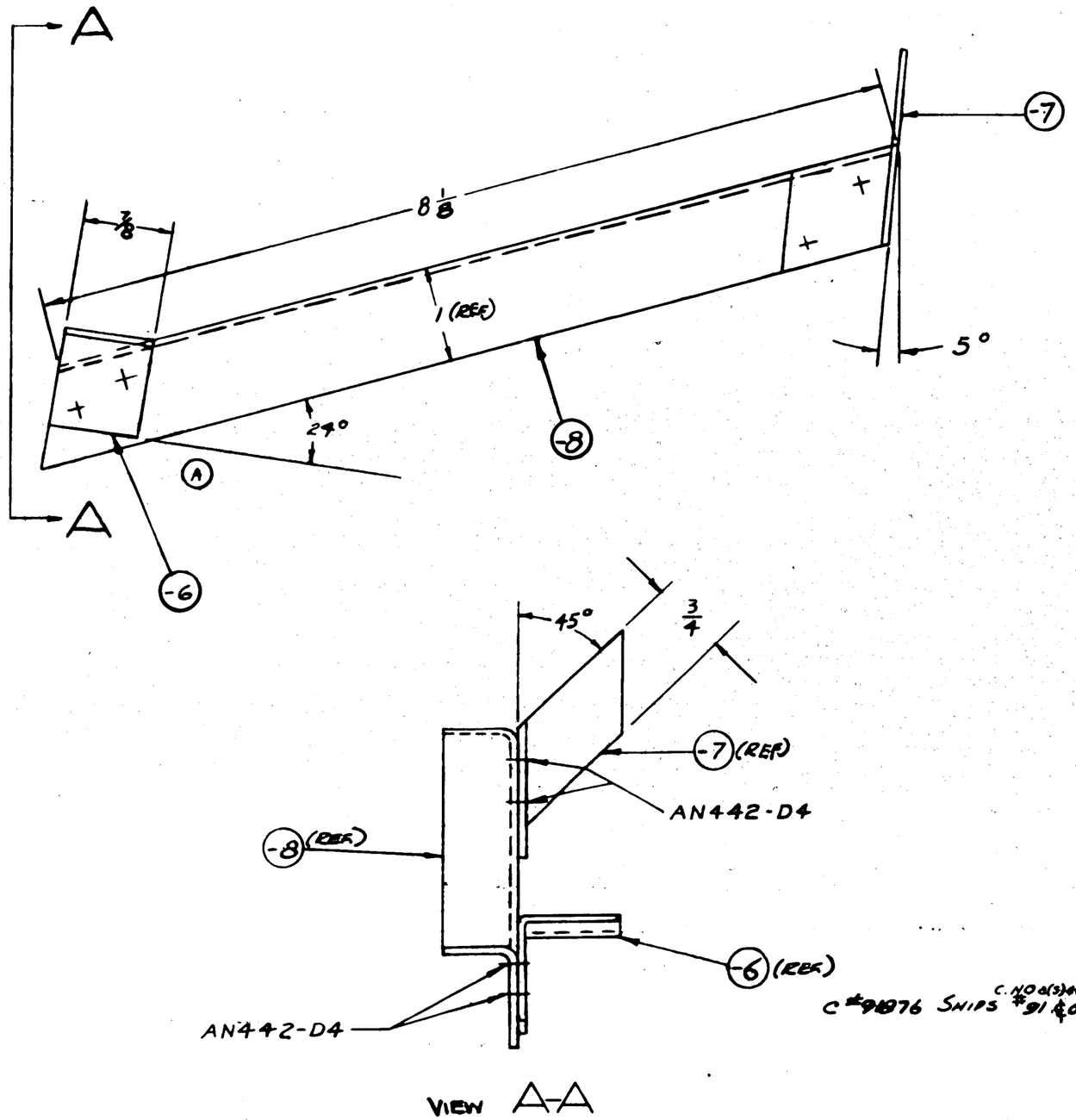

VIEW A-A

MATERIAL NOTES-

(B)
1.-MAT'L. FOR -6 MAY BE-
(A) Y-2-A46T X 1, OR
(B) K78J X 1, AL. AL. EXTR., SPEC. QQ-A-354-T.
2.-MAT'L. FOR -7 MAY BE-
(A) Y-2-A46T X 3, OR
(B) K78J X 3, AL. AL. EXTR., SPEC. QQ-A-354-T.
3.-MAT'L. FOR -8 MAY BE-
(A) Y-6-A17T X 9 1/4, OR
(B) K1288 X 9 1/4, AL. AL. EXTR., SPEC. QQ-A-354-T.

C #91876 SHIPS C. NO 0(3)464 #91 CON

ASSY. BASIS No.	MODEL	NEXT ASSY.	QTY.
	PBY-5A	28C5110	1
	PBY-5	28C5110	1

REQUIREMENTS PER AIRPLANE

REPLACES — .125# CALC. WT.

REPLACED BY — ACT. WT.

LIMIT AND ENGINEERING TOLERANCE DESIGNATION: ± 1/32 ±1/64 — SCALE: 12" = 1'-0"

STAMP PART NUMBER WHERE SHOWN

AN442-D4

PART No.	STOCK	MATERIAL	SPEC.	LH REQ. -0	RH REQ. -2	LH REQ. -3	RH REQ. -4	LH REQ. -5	RH REQ.
-8	NOTED	NOTED	NOTED	1					
-7	NOTED	NOTED	NOTED		1				
-6	NOTED	NOTED	NOTED			1			

PARTS LIST PER ASSY.

AC			FINKLE	Thach				
NAVY	Z-P-GP		9-3-42	9-3-42				
HEAT TREAT	FINISH	DRAFT	CHECK	STRUCT.	MAT.	APPROV.	ENG.	

NAME BRACE — CONT. — FOLLOW-UP CABLE PULLEY BRACKET

OPP. HAND

CONSOLIDATED AIRCRAFT CORP. SAN DIEGO, CALIF.

DWG. D SYM. 28C5097

28C5097

E.O. AT4414

E.O. AD8051

E.O. B1004

A	
B	
C	
D	
E	ON FACE OF DWG. AMYD NOTE "TACK RIVET EACH END WITH [illegible] RIVETS (6 PLACES) (CTSK. INSIDE-6"

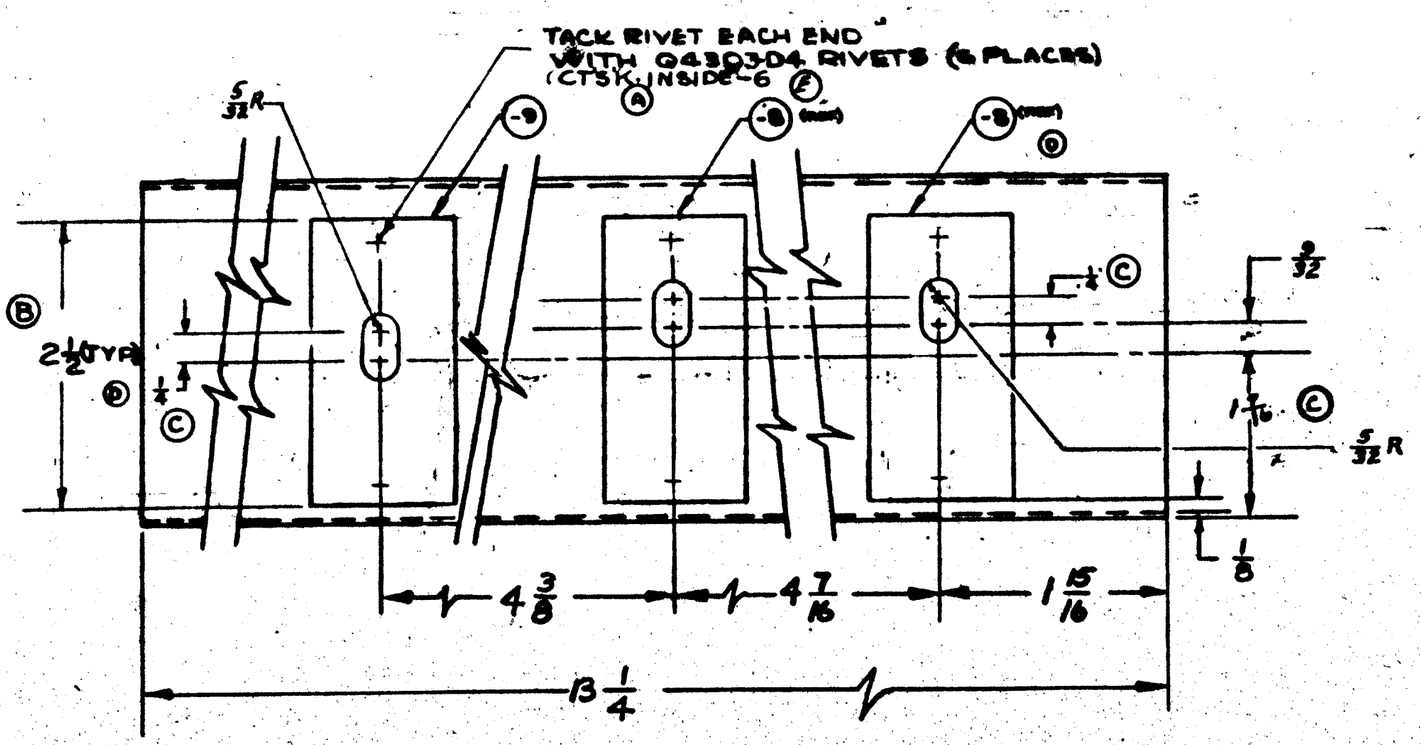

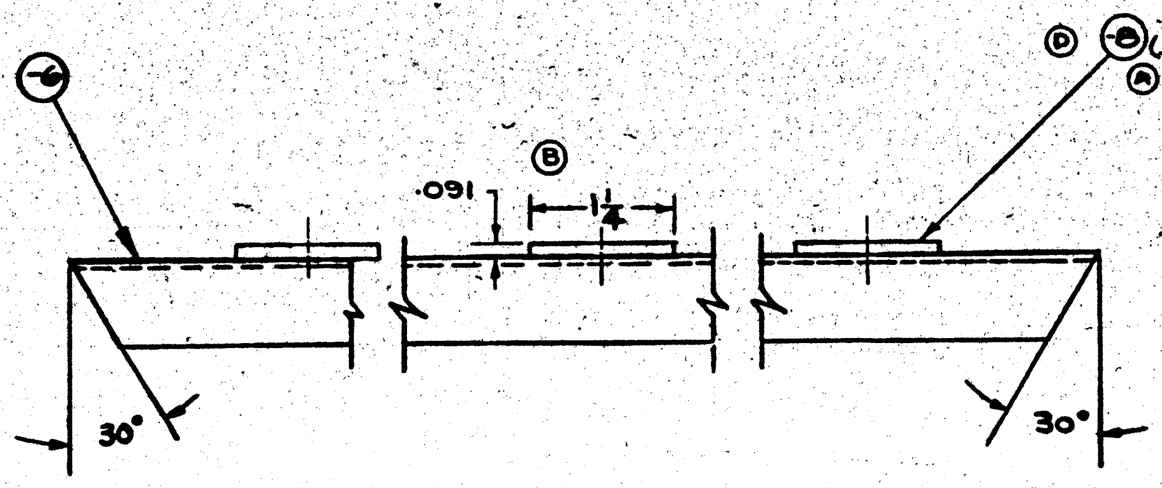

Mfgs 28D4 m.c.g. 101

ASSY. DASH NO.	MODEL	NEXT ASSY.	QTY.
	PBY-5A	28C5110	1
	PBY-6	28C5110	1

REQUIREMENTS PER AIRPLANE

REPLACES

REPLACED BY

SCALE 12"=1'0"

PART No	STOCK	MATERIAL	SPEC.	LH	RH	LH	RH	LH	RH	LH	RH
PARTS LIST PER ASSY.				-0		-2		-3		-4	-5

AC

NAVY

HEAT TREAT

Z-P-GP

FINISH

LINK

WAS

DRAFT | CHECK | STRUCT | MAT | APPROV | DATE

NAME BRACKET-FOLLOW-UP CABLES STA. 1 UPPER PULLEY

CONSOLIDATED AIRCRAFT CORP.

OPP. HAND

SIZE D

28C5036

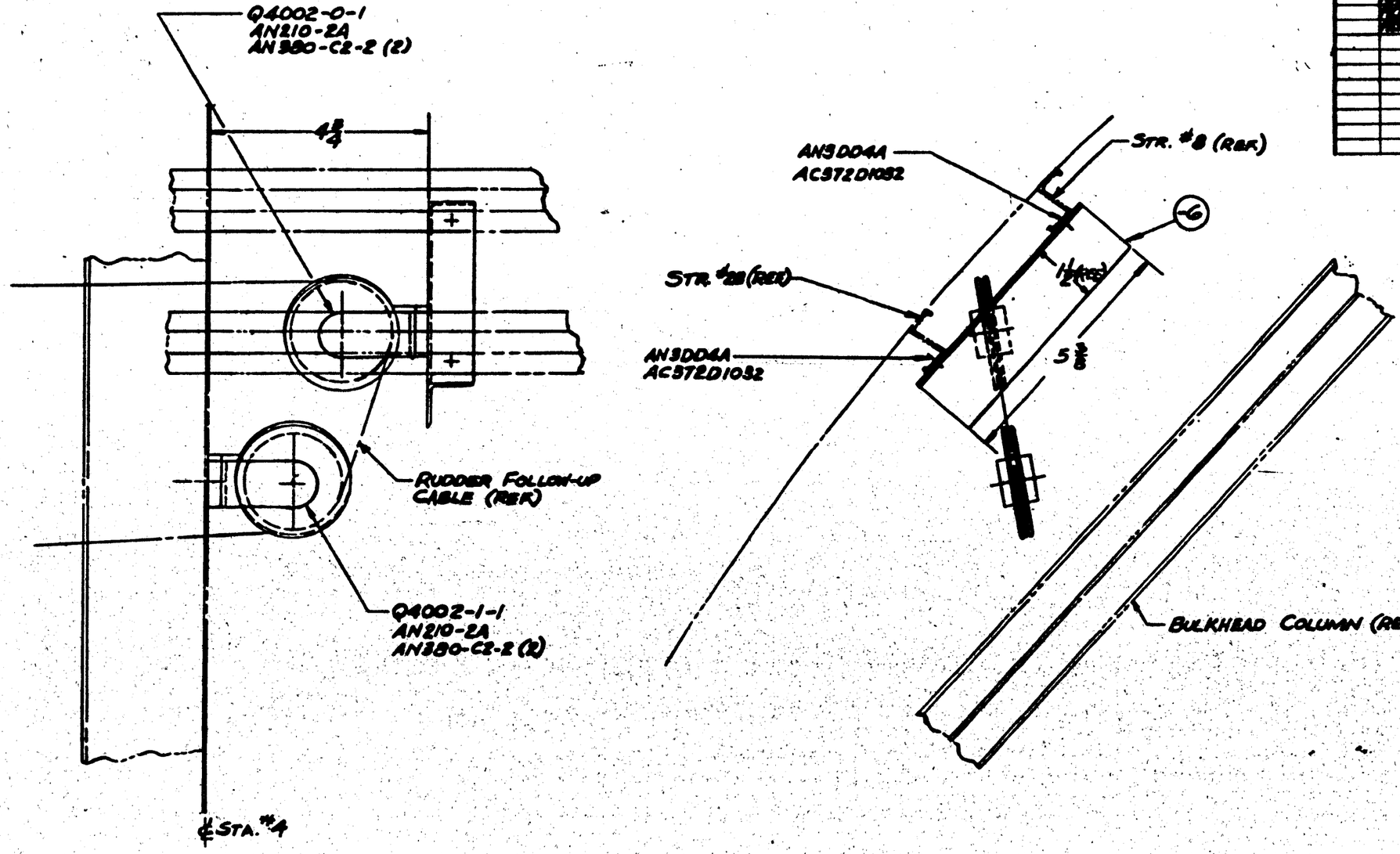

LET	REVISIONS	DATE	BY
A	[redacted]		

NOTE:
1-SEE 28B1007 FOR STRINGER LOCATION.

ASSY. DASH NO.	MODEL	NEXT ASSY.	QTY.
	PBY-5A	[illegible]	
	PBY-5	[illegible]	
	PBY-5A	[illegible]	
	PBY-5	[illegible]	

REQUIREMENTS PER AIRPLANE

REPLACED — QTY.

REPLACED BY — ASY. QTY.

SCALE 6"-1'-0" — 1/32

EXCEPT AS NOTED, MATERIAL & FINISH AS SHOWN

PART NO.	STOCK	MATERIAL	SPEC.	LH REQ.	RH REQ.	LH REQ.	RH REQ.	LH REQ.	RH REQ.	LH REQ.	RH REQ.
				-0	2	-3	-4				
-6	K11636 X 5 3/8	AL AL EXT.	46A9-T								

PARTS LIST PER ASSY.

Q4002-1-1
Q4002-0-1
AN380-C2-2 — 4
AN210-2A — 2
AN3004A — 2

AC
NAVY NONE
HEAT TREAT

Z-P-GP
FINISH

APPROVED 9-6-43 — STRESS STAFF — CHECKED — WT. — STRUCT — MAT — APPROVED 9-11-43

NAME INSTALL-CONTROLS-RUDDER FOLLOW-UP CABLE PULLEY BRKTS

CONSOLIDATED AIRCRAFT CORP. SAN DIEGO, CALIF.

OPP. HAND

SIZE D — 28C5112

R 2115282

LET			
	E.O. A62572		
A			
B			
	E.O. A62682 MCR 1014 & MCR 1084		
C			
D			

38 13/16 TO DECK (APPROX.)

AN3DD14A
AC372D1052
3 PLACES EA. FLANGE

AN3DD14A
AC372D1052
2 PLACES

AN3DD4A
AC372D1052

8 1/4

SECTION B-B
(FOR -2 ASSY.)

38 13/16 TO DECK (APPROX.)

AN3DD14A
AC372D1033
2 PLACES

AN3DD4A
AC372D1033
3 PLACES EA. FLANGE

9 7/8

AN3DD4A
AC372D1032

SECTION A-A
(FOR -0 ASSY.)

NAF 311195

© 28F6868-5 (FOR -0 ASSY.)
28F6867-7R (FOR -2 ASSY.)

3 1/2 (APPROX.)

RUDDER FOLLOW-UP CABLE (REF.)

28F6867-6 (FOR -0 ASSY.)
28F6867-7L (FOR -2 ASSY.)

© STR. #10 (REF.) (FOR -0 ASSY.)
STR. #8 (ON -2 ASSY.)

© (FOR -0 ASSY.) 6L
(FOR -2 ASSY.) 8L

6R (FOR -0 ASSY.)
8R (FOR -2 ASSY.)

© STR. #11 (REF.) (FOR -0 ASSY.)
STR. #10 (FOR -2 ASSY.)

A
B

A
B

STA. # 1.66

PLAN VIEW
FORWARD

G - GOV'T. FURNISHED EQUIPMENT

© D 6 MCR 2031-1 TO MCR 1084 C SHEETS 120 TO MCR 1084 C-51376 & 51-115

QUAN. PER ASSY.	MODEL	NEXT ASSY.	REQ.
-2	ABY-2A	28C3102	1
-2	PBY-5	28C5102	1
-0	PBY-5	28C5102	1

REQUIREMENTS PER AIRPLANE

REPLACED — GALC. WT.
REPLACED BY — ACT. WT.

SCALE 6"=1'-0"

PART No.	STOCK	MATERIAL	SPEC.	LH REQ.	RH REQ.	LH REQ.	RH REQ.	LH REQ.	RH REQ.	LH REQ.	RH REQ.	LH REQ.	RH REQ.
28F6867-12													
28F6867-7L													
AC372D1033													
AN3DD14A													
AN3DD4A													
NAF 311195-14													
28F6867-6													
28F6868													
-8R	V56A11RT X 8 1/2												
-8L	V56A11RT X 8 1/2												
-6R	V56A11RT X 6												
-6L	V56A11RT X 6												

PARTS LIST PER ASSY. — -0 | -2 | -3 | -4 | -5

AC
NAVY NONE — Z-P-6P
HEAT TREAT — FINISH

FAIRLISTED	STRESS	STRESS	WT'S	% Rework	Dwgs.
DRAFT	DESIGN	STRESS	MAT	APPROV	ENG.
			9-6-43		

NAME INSTALLATION-CONTROLS-FOLLOW UP CABLE DISPLACEMENT UNIT
CONSOLIDATED AIRCRAFT CORP. San Diego, Calif.

GOV. HAND
SIZE D
28C5114
SHT. 2

LET	ALTERATION	DATE	BY
A	[redacted]		

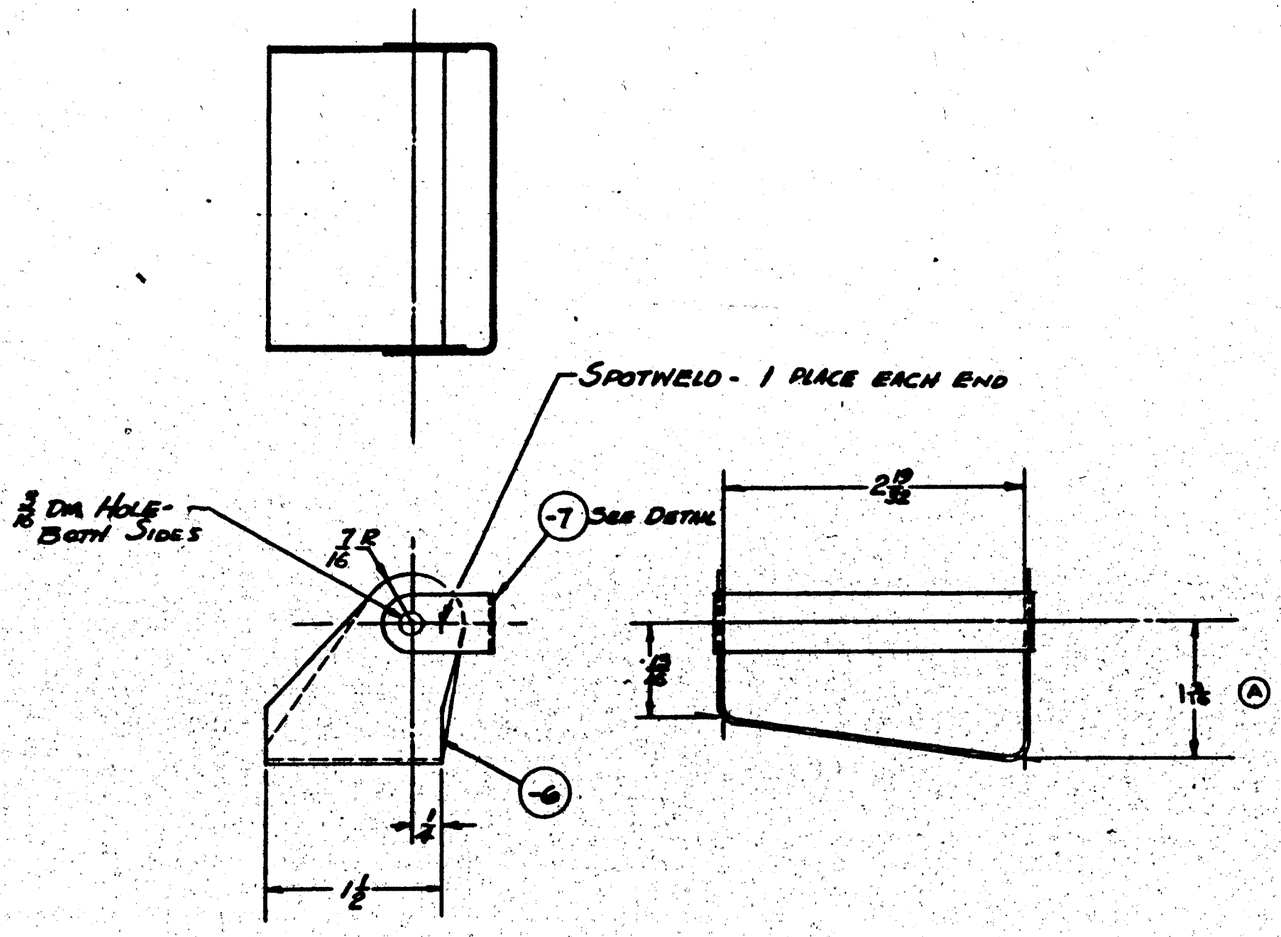

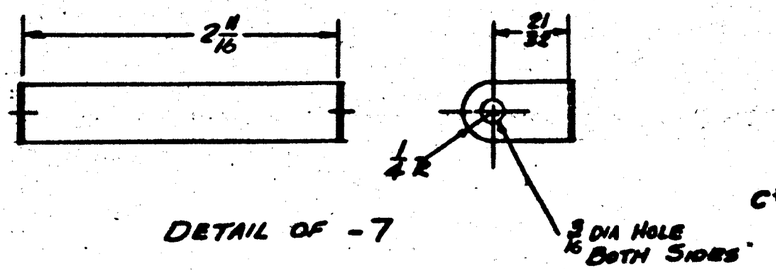

DETAIL OF -7

C^th 31876 Shts 51 for

ASSY. SER. No.	MODEL	PART ASSY. NO.	REQ.
	PBY-5	28C1137	1

REQUIREMENTS PER AIRPLANE

REPLACED 28C1137	GRS. WT. .05#
REPLACED BY	ASS. WT.
SCALE 12"=1'-0"	

PART No.	STOCK	MATERIAL	SPEC.	LH REQ.	RH REQ.	LH REQ.	RH REQ.	LH REQ.	RH REQ.	LH REQ.	RH REQ.	LH REQ.	RH REQ.
PARTS LIST PER ASSY.				-0		-2		-3		-4		-5	
-7	.090 X 5/8 X 4 5/8	ALCLAD	47AB-T	1									
	3/8 X 2 X 3 1/2	ALCLAD	47AB-T			1							

AC								
NAVY NONE	Z-P-GD							
HEAT TREAT	FINISH	DRAFT	CHECK	STRUCT	MAT	APPROV	ENG.	

NAME BRACKET - STA. #2 - FOLLOW-UP CABLES - PULLEY

OPP. HAND

CONSOLIDATED AIRCRAFT CORP. San Diego, Calif.

SIZE D

28C5118

R

LET.	REVISIONS	DATE	APP'D
A	[illegible]		
	[illegible]		
	[illegible]		
	[illegible]		
B	ADDED CUTOUT & ADDL. [illegible]		
	[illegible]		

E.O. A97848

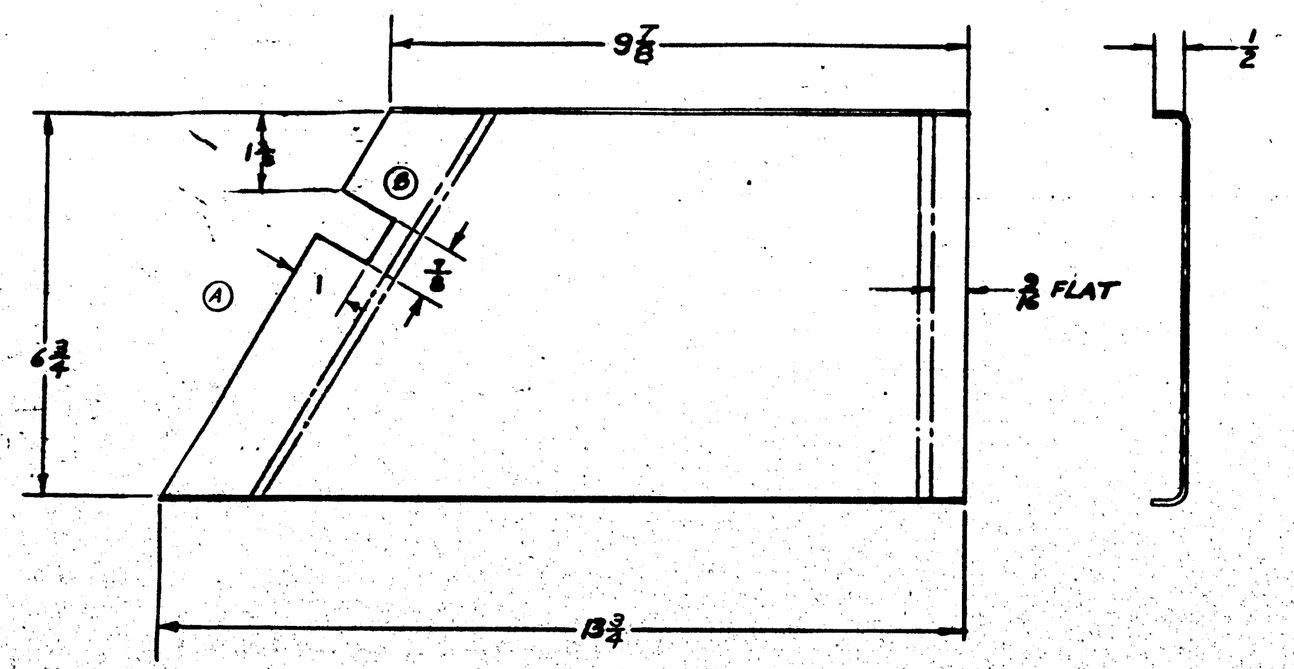

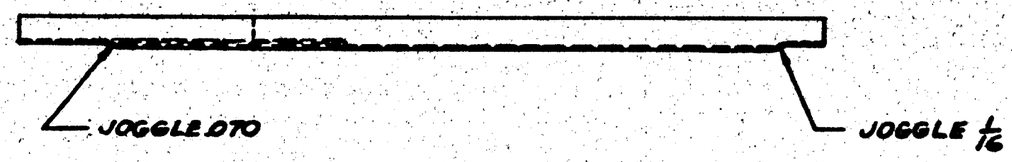

C91876 # 91 E ON

LET	ALTERATION	DATE	BY
	ED A60748-B		
A	IN BRK CH'GD -6 FROM K5404 = 7½ AL.AL. EXT. TO DGA x 1⅛ x 7½, ALC 24ST. QQ-A-362-T; TO FROM K5401 AL.AL. EXT. TO DGA x 1⅛ x [illegible] ALC 24ST. QQ-A-362 T; -11 FROM K1288 AL.AL. EXT TO .072 x 1⅛ x 3⅜ ALC 24ST. QQ-A-362 T.		
	ON FACE: 1⅝ DIM. WAS 1⅜, 1¼ WAS 1⅛ ADDED		
	1 DIM. 2 PLACES & 3⅜ DIM. 3 PLCS ADD INT. CHG.	4-10-43	[illegible]
	MCR 101-A & 203-A		
B	IN REQS. FOR CHANGED REQS:- FOR PBY-5		
	C. 5987G, FROM C. 31876 ADD TO MCR 101-H TO MCR 101-I.		
	FOR PBY-5A C. [illegible] ADD [illegible] ALL TO MCR-203-H TO MCR 203-A. ADDED REQS FOR N/A		
	28C5133:- PBY-5, C. 31876 MCR 101-A & ON.		
	PBY-5A C. [illegible] MCR 203-A-ON. ADD INT CHG	4-10-43	[illegible]

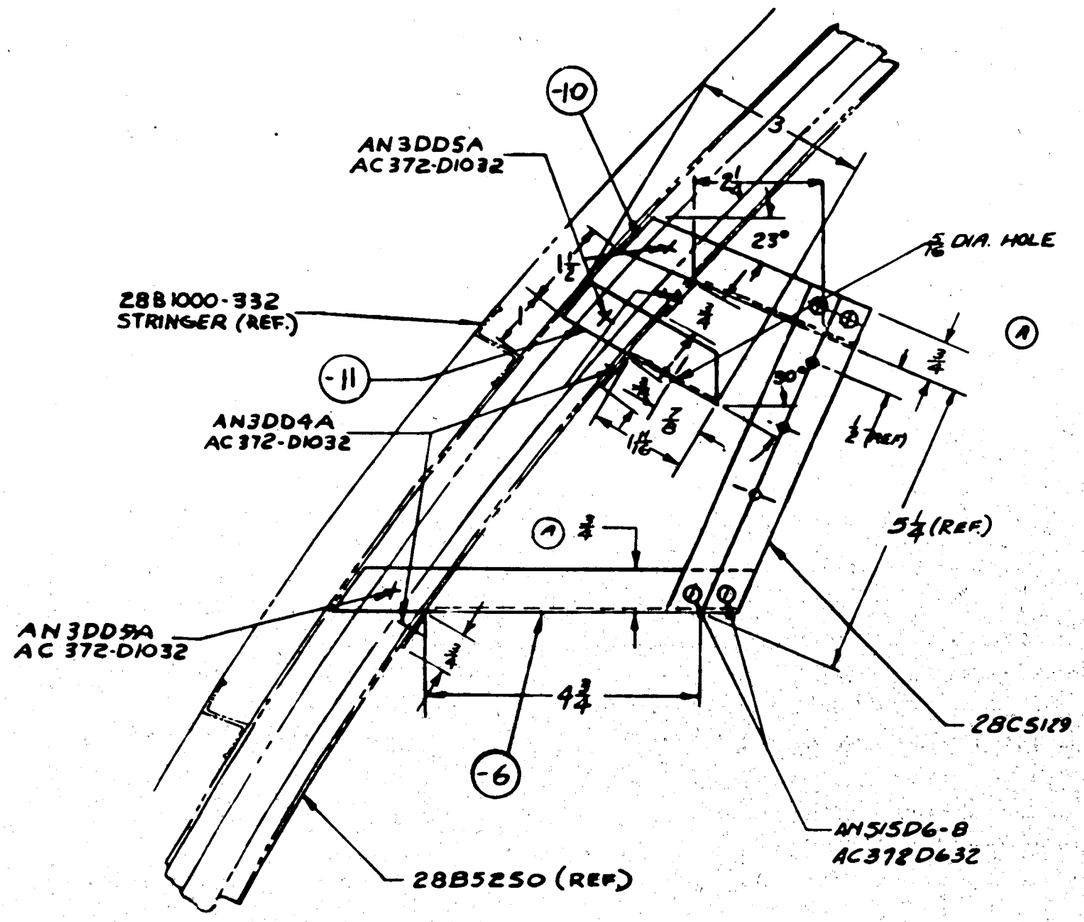

VIEW LOOKING F'W'D
PORT SIDE

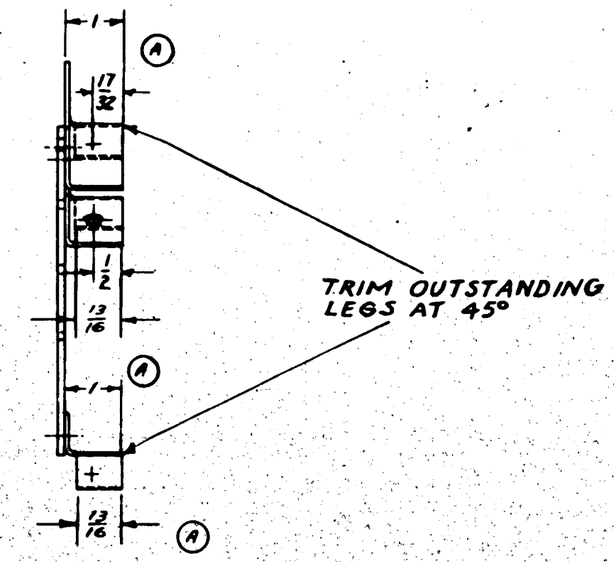

(B) C. NO. 8884464 MCR 203-A & ON
C. 31876 MCR 101-A & ON
C. NO. 8884464 MCR 203-H TO MCR 203-A
C. 31876 MCR 101-I TO MCR 101-A

ASSY. DASH NO.	MODEL	NEXT ASSY.	QTY
	PBY-5A	28C5133	1
	PBY-5	28C5133	1
	PBY-5A	28C5102	1
	PBY-5	28C5102	1

REQUIREMENTS PER AIRPLANE

REPLACES .20 CASE WT.

REPLACED BY ASY WT

UNLESS OTHERWISE SPECIFIED: ± 1/32 ∠ ± ½° — SCALE 6" = 1'-0"

STAMP PART NUMBER WHERE SHOWN

PART No	STOCK	MATERIAL	SPEC	LH REQ. -0	RH REQ. -0	LH REQ. -2	RH REQ. -2	LH REQ. -3	RH REQ. -3	LH REQ. -4	RH REQ. -4	LH REQ. -5	RH REQ. -5
AN515D6-8				4									
AN3DD5A						3							
AN3DD4A								3					
AC372D1032										6			
AC372D632												4	
28C5129				1									
-11	.072 x 1⅛ x 3⅜	ALC 24ST	QQ-A-362-T	1									
-10	.064 x 1⅛ x 4¼	ALC 24ST	QQ-A-362-T			1							
-6	.064 x 1⅛ x 7½	ALC 24ST	QQ-A-362-T					1					

PARTS LIST PER ASSY.

AC		FINKLESTEED	GEORGE	WJ	GROVER	ZDOCK
NAVY NONE	Z-P-GP	9-7-42	9-8-42			9-11-42
HEAT TREAT	FINISH	DRAFT	CHECK	STRUCT	MAT	APPROV	ENG

NAME INSTALL.-CONT.-FOLLOW-UP CABLE FAIRLEAD & PULLEY BRKT. SUPPORT STA 25

CONSOLIDATED AIRCRAFT CORP. SAN DIEGO, CALIF.

OPP HAND

DWG. D. SIZE

28C5126

R 9-11-42

LET	ALTERATION	DATE	BY

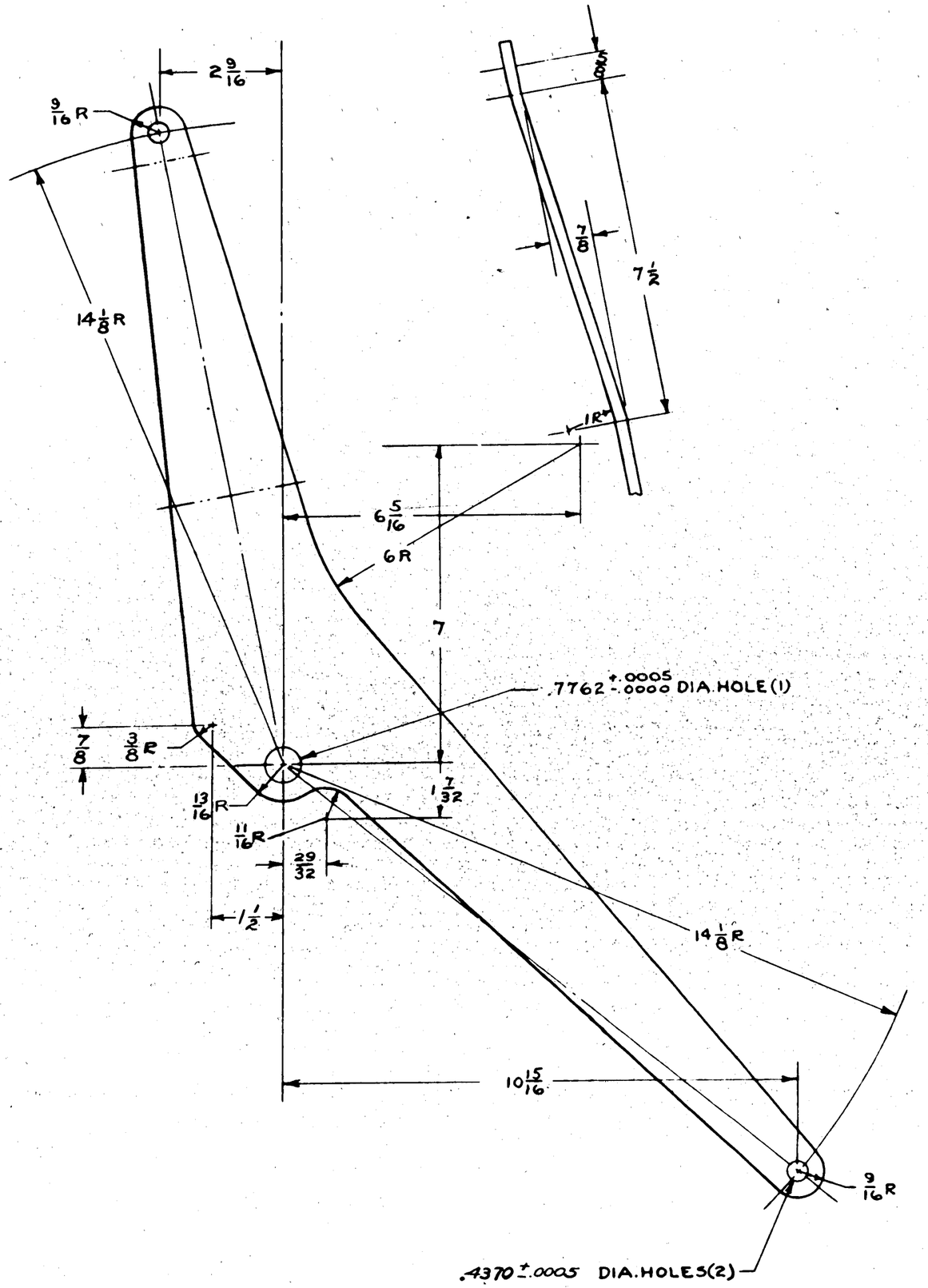

APPROVED FOR TOOLING BY
E. E. Dalton
6-14-43

M.C.R. 252(1)

ASSY. DASH NO.	MODEL	NEXT ASSY.	REQ.
-R	PBY-5A	28C5138	1
-L	PBY-5A	28C5138	1
-R	PBY-5	28C5138	1
-L	PBY-5	28C5138	1

REQUIREMENTS PER AIRPLANE

REPLACES	1.65# CALC WT.
REPLACED BY	ACT. WT.
LIGHT OR DISCREPANCIES UNLESS OTHERWISE SPECIFIED ± 1/32 UNNOTED	SCALE 6" = 1'0"
STAMP PART NUMBER WHERE SHOWN	

PART NO	STOCK	MATERIAL	SPEC	LH REQ.	RH REQ.	LH REQ.	RH REQ.	LH REQ.	RH REQ.	LH REQ.	RH REQ.	LH REQ.	RH REQ.
	1/4 x 7 x 28	AL. AL. SHT.	47A10-1										
PARTS LIST PER ASSY.				-0		-2		-3		-4		-5	

AC		WALLACE			
NAVY NONE	Z-P-GP	5-18-43			
HEAT TREAT	FINISH	DRAFT	CHECK	STRUCT	WT.

NAME ARM-CONTROL YOKE

OPP HAND 28C5137-R

CONSOLIDATED VULTEE AIRCRAFT CORP. SAN DIEGO DIVISION . . . SAN DIEGO, CALIF.

DWG D SIZE

28C5137

R 28C5137

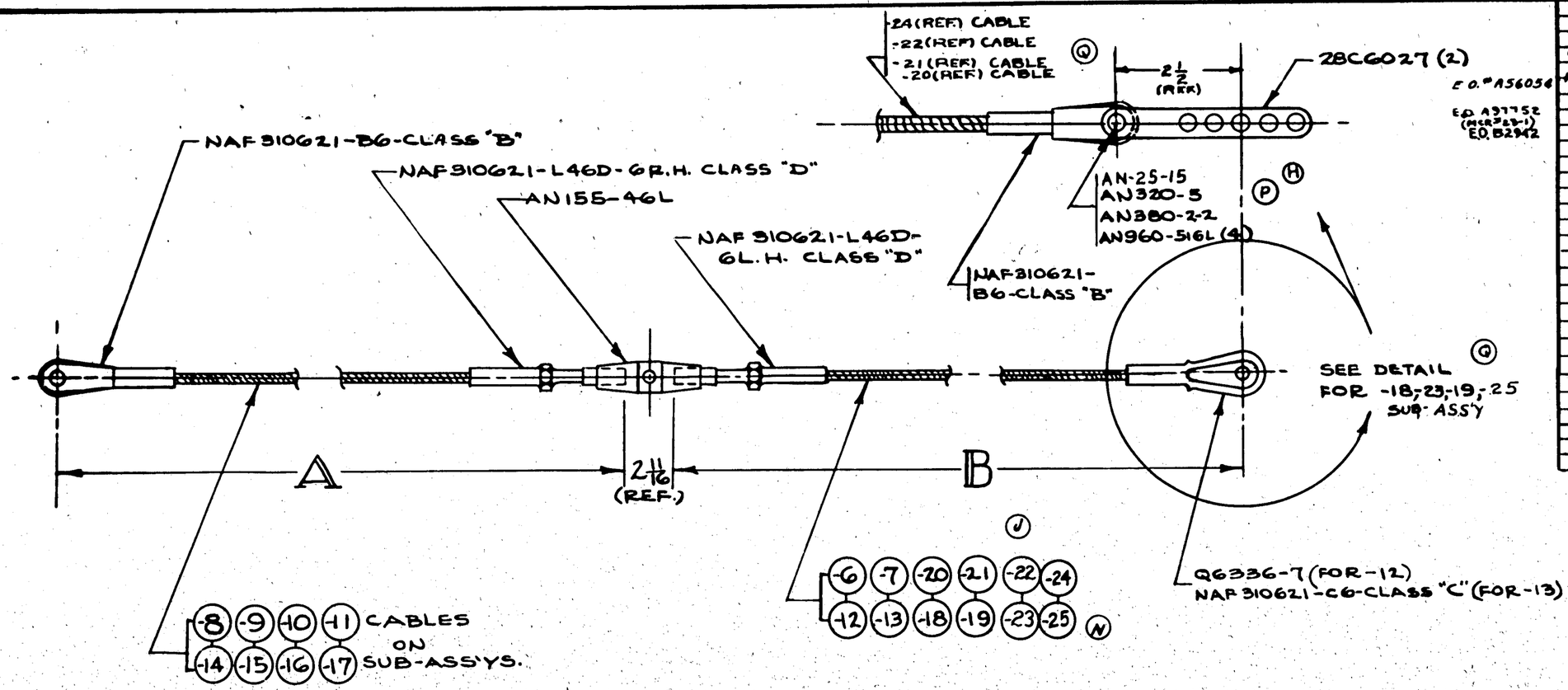

LET	ALTERATION	DATE	BY
G	REDRAWN & REVISED AS PER E.O. A21881A	6-29-42	GRANDMAISON
H	ON FACE & B/M. 28C50087 WAS AN25-14 NEG. W.C.H.	8-22-42	GRANDMAISON
J	CREATED -54 ASSY & -23 SUB-ASSY.		
	ADDED NOTE: "LENGTH APPROXIMATE" W.C.H.	10-19-42	
K	CREATED -55 ASSY. WT. CHG. NEG	1-(19)43	
L	CREATED LENGTH FOR -23 IN TABULATION BLOCK "B". CREATED LENGTH FOR -22 IN B/M WT. CHG. NEG.	2-25-43	
M	DIM. B FOR -25, 161 5/8 WAS 163 1/2; B/M -22 (3/16 x 7 x 19 x 161) WAS (3/16 x 7 x 19 x 163) NEG. WT. CHG.	4-16-43	
N	IN -55 ASSY. REPLACED -23 SUB-ASSY. WITH -25 SUB-ASSY. -25 SUB-ASSY. IS IDENTICAL TO -23 SUB-ASSY EXCEPT THAT -24, 3/16 X 7 X 19 X 163 TINNED CARBON STEEL CABLE REPLACES -22 CABLE. REMOVED NOTE "LENGTH OF -22 CABLE ---" WT. CHG. NEG.	7-27-43	STEED
P	AN-25-15 Q WAS 28C50870 WT. CHG. NEG.	8-11-43	
Q	ADDED DIM. 2 1/2 (REF.) & -24 (REF.) CABLE TO NOTE: "SEE DETAIL FOR -18, -23, -19 SUB-ASS'YS" ADDED -25". NO WT. CHG.	10-22-43	

LENGTHS	
SUB ASSY	— A —
-14	415 1/4
-15	389 1/2
-16	385 1/2
-17	365

LENGTHS	
SUB ASSY	— B —
-12	76 3/4 (EL.)
-13	159 (RUD.)
-18	76 3/4 (EL.)
-19	159 (RUD.)
L -23	161 5/8 M
-25	163 1/2 N

NOTES:

1. PRESTRETCH CABLE ASSYS. TO 2520# WHICH IS 60% OF RATED LOAD.
2. CABLES TO BE COATED WITH PARALKETONE, SPEC. RM61 TYPE "B" AS PER SPEC. SR15C.
3. DIMENSIONS SHOWN ARE WITH 3 THREADS EXPOSED AT TURNBUCKLES.

ASSY DASH NO.	MODEL	NEXT ASSY.	REQ.
	REQUIREMENTS PER AIRPLANE		
-55	PBY-5A	28C5564	1
-54	PBY-5	28C5086	1
-51	PBY-5B	28C5500	1
-50	PBY-5B	28C5500	1
-53	PBY-5A	28C5564	1
-52	PBY-5A	28C5564	1
-1	PBY-5	28C5086	1
-50	PBY-5	28C5086	1
-53	28-5AMN	28C5750	1
-52	28-5AMN	28C5750	1
-2	28-5MN	28C5500	1
-0	28-5MN	28C5500	1
-4	28-5AMC	28C5750	1
-3	28-5AMC	28C5760	1
-2	28-5MC	28C5500	1
-0	28-5MC		1
-2	28-5ME		1
-0	28-5ME		1
-2	28-5MA		1
-0	28-5MA	28C5500	1

MCR 178-15
MCR 23-1
C* 88476 ONLY
C* 88476 17 NOS 115895
*A-89891-345
C* 91876

REPLACES 28C5510 (B-SIZE 1-24-40) CALC WT.
REPLACED BY ACT. WT.
SCALE NONE
+ 1/8
STAMP PART NUMBER WHERE SHOWN

PART NO.	STOCK	MATERIAL	SPEC.	REQ. -0	REQ. -2	REQ. -3	REQ. -4	REQ. -50	REQ. -51	REQ. -53	REQ. -54	REQ. -55
	PARTS LIST PER ASSY.											
28CG027												
	-24	3/16 x 7 x 19 x 163	TINNED CARBON STEEL CABLE									
	-22	3/16 x 7 x 19 x 161										
	-21	3/16 x 7 x 19 x 157										
	-20	75										
	-11	364 1/2										
	-10	385										
	-9	415										
	-8	389										
	-7	159										
	-6	3/16 x 7 x 19 x 77	TINNED CARBON STEEL CABLE	AN-RR-C-43								
	PARTS ON SUB-ASS'YS.			12	13	14	15	16	17	18	19	23 25
AN155-46L												
	-25	SUB-ASSY.										
	-23	SUB-ASSY										
	-19	SUB-ASS'Y										
	-18											
	-17											
	-16											
	-15											
	-14											
	-13											
	-12	SUB-ASS'Y										
NAF 310621-C6-CLASS	"C"											
NAF 310621-B6-CLASS	"B"											
NAF 310621-L46D-6L	H.-CLASS "D"											
NAF 310621-L46D-6R	.H.-CLASS "D"											
Q6336-7												
AN-25-15												
AN960-516L												
AN380-2-2												
AN320-5												

AC		GRAND-ALL			DM.	T.M.	
NAVY NONE	SEE NOTE #2	1-24-40		GREEN 1-24-40	1-24-40	R.	
HEAT TREAT	FINISH	DRAFT	CHECK	STRUCT.	MAT.	APPROV.	ENG.

NAME CABLE ASSEMBLY-RUDDER & ELEVATOR CONTROL

OPP. HAND

CONSOLIDATED AIRCRAFT CORP. SAN DIEGO, CALIF.

SIZE D

28C5510

R 28C5510

LET	ALTERATION	DATE	BY
A	O.M.O.NO. REMOVED DIM'S. 2 1/32, 1 19/32, 6 3/32, 7/16 & 5/32. CHG'D DIM'S. 7 1/2 TOL 5/16, 1 5/8 TO 2 9/16 RADDED DIM'S. 3 1/16, 3/16 (2) & 120° ON DWG. & IN 5/M CHG'D ANA6R-DAIA PLACES TO AN526 DD1032 & AN372 D1032 (2 PLACES) IN 5/M CHG'D. -7 FROM "-6" TO 2 9/16 & -8 FROM "7 5/8 TOL 5/16". NEG WT CHG.		E.O. A55242 4-8-42
B	28C5514-7 WAS 28C5514- NO WT. CHG.	8-13-42	
C	DIMS. 3/32 WAS 3/16, 3/32 WAS 3/16. NEG WT CHG.	8-13-42	

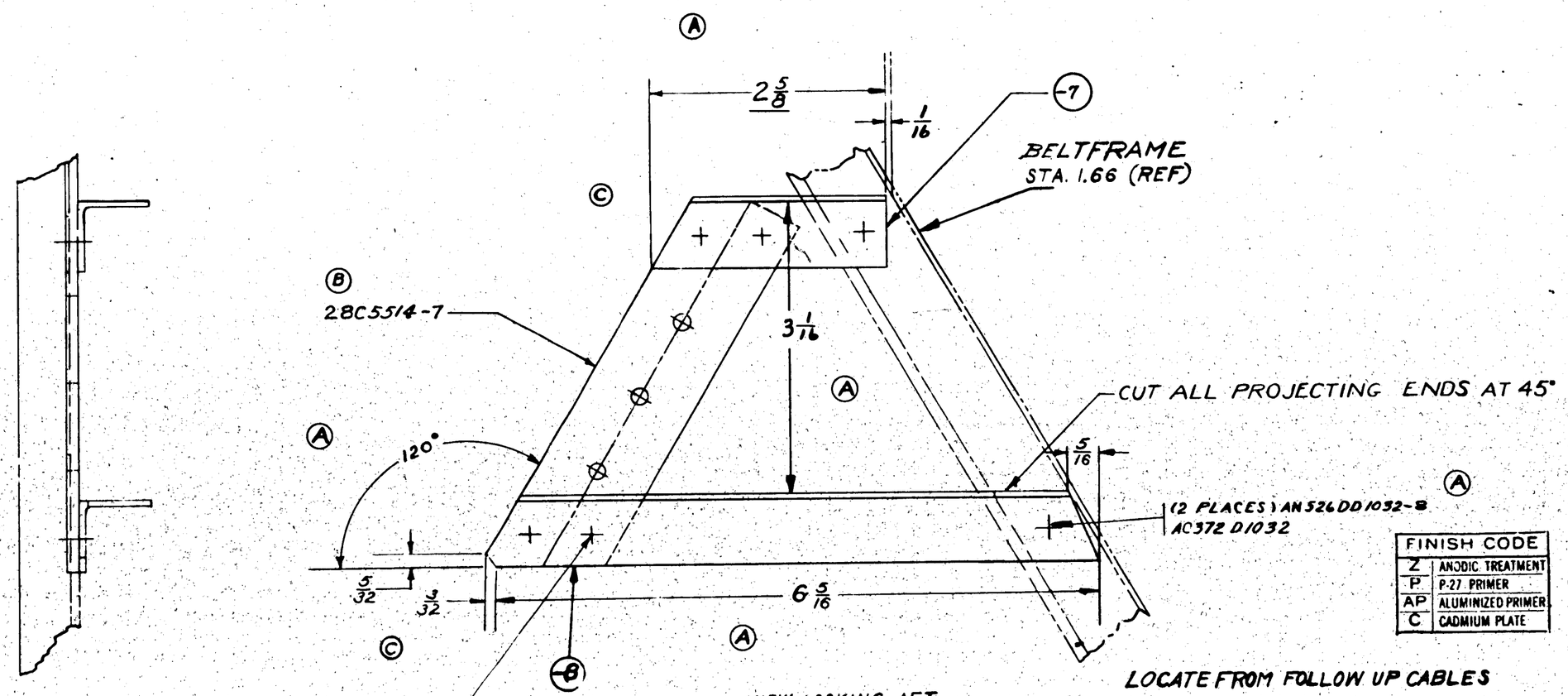

FINISH CODE	
Z	ANODIC TREATMENT
P	P-27 PRIMER
AP	ALUMINIZED PRIMER
C	CADMIUM PLATE

ASSY. DASH NO.	MODEL	NEXT ASSY	QTY
-0	U.S.C.G.	28C3001	1
-0	PBY-5	28C5086	1
-0	PBY-5A	28C5730	1
-0	28-5AMA	28C5730	1
-0	28-5AMC	28C5750	1
-0	PBY-5B	28C5500	1
-0	28-5ME.MM	28C5500	1
-0	28-5MA.MK	28C3500	1

#1-90 C.#91876 →
C.#88476 →
C-88477 →

REQUIREMENTS PER AIRPLANE

REPLACES
REPLACED BY
.150 CALC WT.
ACT WT

LIMIT ON ENGINEERING VARIANCE OR HOUSEKEEPING DIMENSIONS ± 1/32

SCALE 12" = 1'0"

STAMP PART NUMBER WHERE SHOWN

PART No	STOCK	MATERIAL	SPEC.	LH REQ.	RH REQ.	LH REQ.	RH REQ.	LH REQ.	RH REQ.	LH REQ.	RH REQ.	LH REQ.	RH REQ.
	AC372D1032											2	2
	AN526DD1032-8											2	2
	AC365D832											4	4
	AN526D832-8											4	4
	28C5514-7											1	1
-8	K5401X6 3/8	AL.AL. EXT.	46A10 CONDT									1	1
-7	K5401X2 3/4	AL.AL. EXT.	46A10 CONDT									1	1
				-0		-2		-3		-4		-5	

PARTS LIST PER ASSY.

AC
NAVY NONE — HEAT TREAT
-7, -8 ZP-2AP — FINISH

	DRAFT	CHECK	STRUCT.	MAT	APPROV	ENG.
	10/4/40			10/5/40		

NAME INSTALLATION-CONTROLS-STA. 1.66 SPERRY FOLLOW UP CABLE FAIRLEAD

CONSOLIDATED AIRCRAFT CORP. SAN DIEGO, CALIF.

OPP. HAND

SIZE D — 28C5513

R

LET	ALTERATION	DATE	BY
A	REVISED & REDRAWN	12-8-41	[illegible]
B	REMOVED TOL (±.015) ON 6 7/16 DIM. & ADDED ±.015 TOL. TO 2 1/8 DIM.	12-10-41	"
C	ADDED LEFT HAND & RIGHT HAND AND NOTE FOR DIMENSION NOT SHOWN	12-10-41	"
D	1 7/8 WAS 1 1/2. NO WT. CHG.	7-14-42	[illegible]
E	DIM 1 1/2 WAS 1 11/16. NO WT. CHG.	9-30-42	[illegible]

E.O.B25069

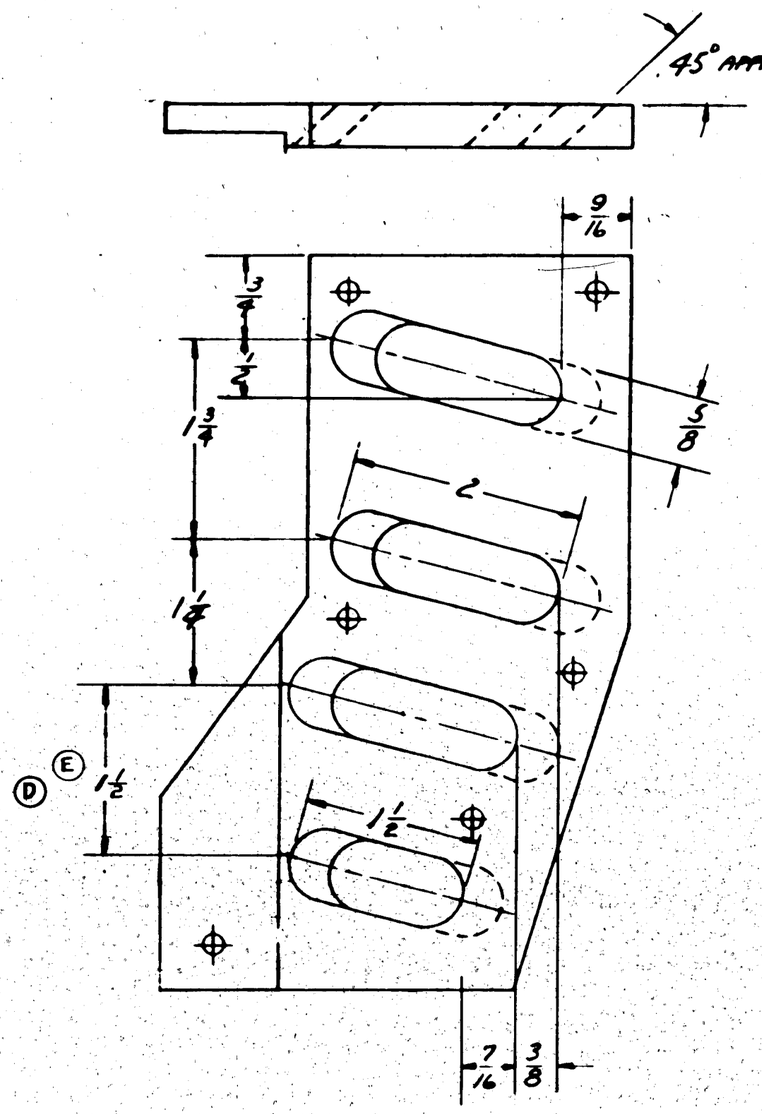

LEFT HAND
NOTE:- FOR DIMENSIONS NOT SHOWN SEE RIGHT HAND

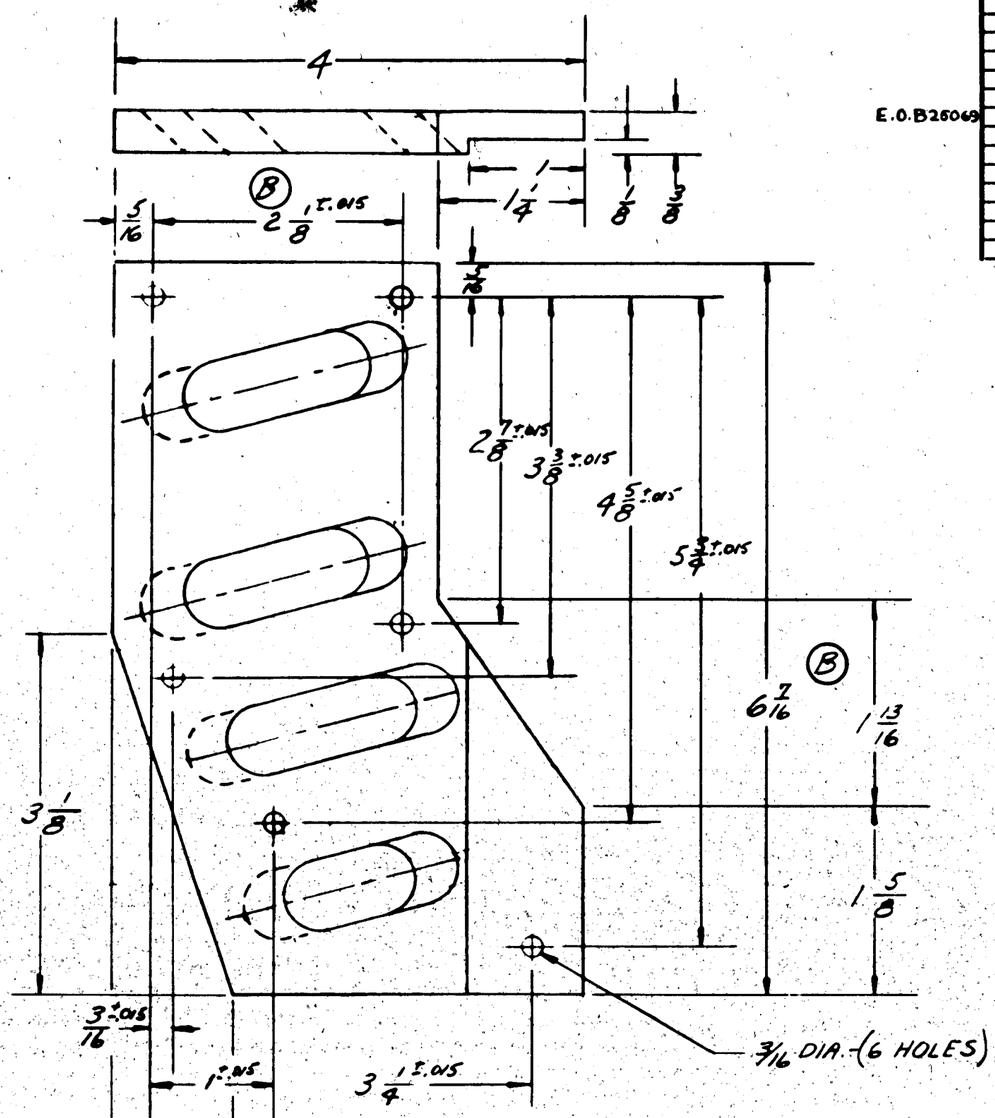

RIGHT HAND
NOTE:- FOR DIMENSIONS NOT SHOWN SEE LEFT HAND

PURCHASE TO DWG

-R	28-STAMN	28C5529-2	1
-L	28-STAMN	-0	1
-R	OA-10	-2	1
-L	OA-10	-0	1
-R	28SAMC	-2	1
-L	28SAMC	-0	1
-R	28V-SA	-2	1
-L	28V-SA	28C5529-0	1
ASSY. DASH NO.	MODEL	NEXT ASSY.	REQ.

REQUIREMENTS PER AIRPLANE

REPLACES 28C5529 ORIG 9-25-41

REPLACED BY

CALC. WT.

ACT. WT.

UNLESS OTHERWISE SPECIFIED ± 1/32

SCALE 12"=1'-0"

STAMP PART NUMBER WHERE SHOWN

PART NO.	STOCK	MATERIAL	SPEC.	LH REQ.	RH REQ.	LH REQ.	RH REQ.	LH REQ.	RH REQ.	LH REQ.	RH REQ.	LH REQ.	RH REQ.
	3/16 x 4 1/2 x 16 7/8	3/16 ALCLAD 24S-T	QQ-A-265	1	1								
PARTS LIST PER ASSY.				-0		-2		-3		-4		-5	

AC

NAVY NONE

HEAT TREAT

NATURAL

FINISH

DRAFTER 11-25-41

CHECK DUBLIN

STRUCT

MAT JCH

APPROV KAUM

DES. WINTHER

CK WALKER

NAME FAIRLEAD-CONTROLS-SURFACE CONTROL CABLES-SHEAR WEB

OPP. HAND 28C5529R

CONSOLIDATED AIRCRAFT CORP. SAN DIEGO, CALIF.

DWG. SIZE D

28C5529

R

28C5529

LET	ALTERATION	DATE	BY
A	CHANGED [illegible]	2-4-42	[illegible]
	AC 360DF837 WAS AC [illegible]		
B	[illegible]		
	[illegible]		
	CHANGED TO A1AP JOINT. [illegible]		
	TO SHEET.	2-18-42	[illegible]
ED.A30489	C DIM.13/8 WAS 1/8. W.T.CHG.NEG.	3-19-42	[illegible]
ED.A72858	D ADDED SLOT & LOCATING DIM'S. NEG. WT. CHG.	3-21-42	[illegible]

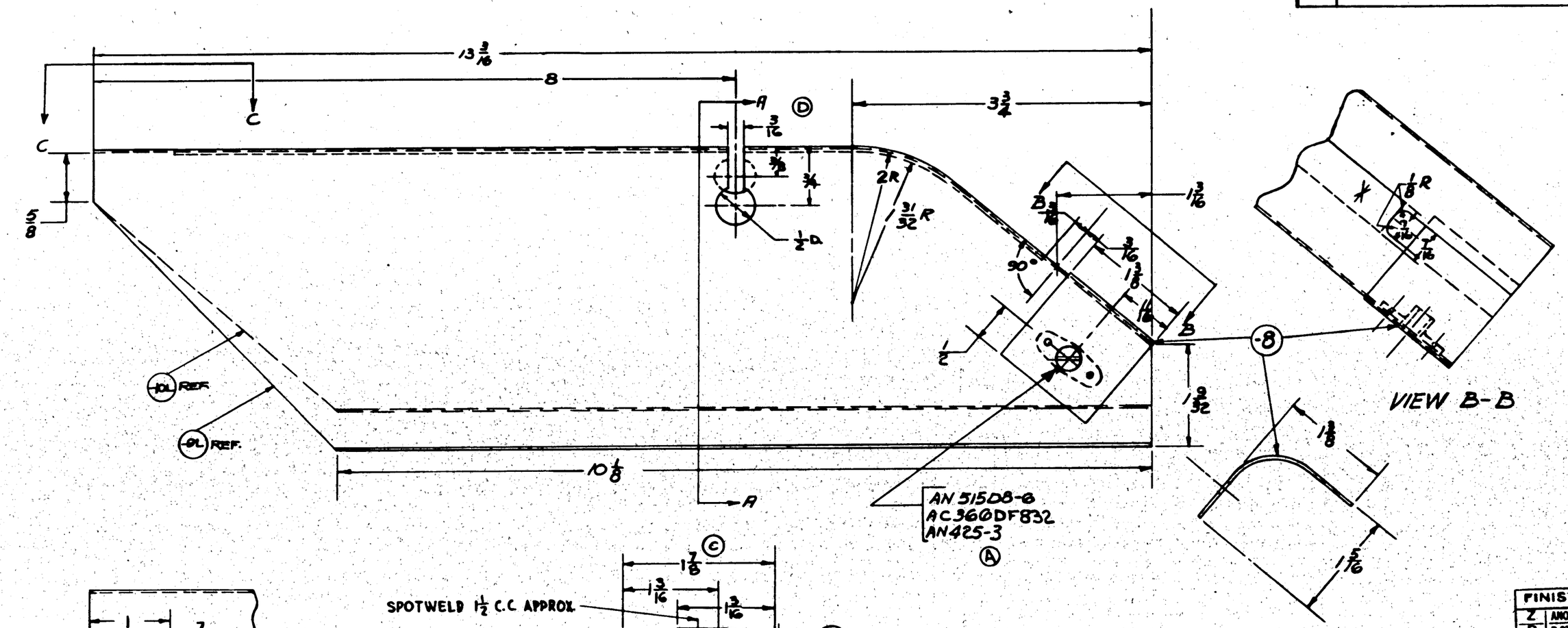

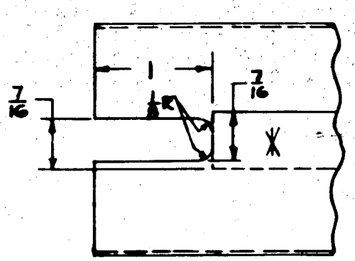

BEND RADII 1/16 EXCEPT AS NOTED

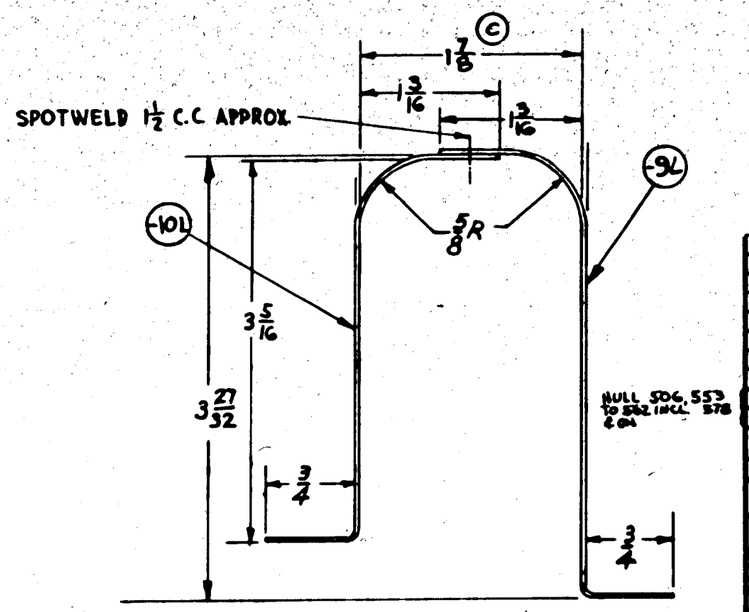

RUSH RELEASED 2-3-42

FINISH CODE	
Z	ANODIC TREATMENT
P	P-27 PRIMER
AP	ALUMINIZED PRIMER
C	CADMIUM PLATE

ASSY. DASH NO.	MODEL	NEXT ASSY.	QTY.
-R	28-5AMN	28C5555	1
-L	28-5AMN	28C5555	1
-R	PBY-5A	28C5555	1
-L	PBY-5A	28C5555	1

REQUIREMENTS PER AIRPLANE

REPLACES 28C5524 — .53 Calc. Wt.

REPLACED BY — Act. Wt.

UNLESS OTHERWISE SPECIFIED ± 1/32 — SCALE 12"=1'-0"

STAMP PART NUMBER WHERE SHOWN

AN 515D8-6
AC 360DF832
AN 425-3

PART NO	STOCK	MATERIAL	SPEC.	LH REQ. -0	RH REQ. -2	LH REQ. -3	RH REQ. -4	LH REQ. -5	RH REQ.
-A	.025 X 3 X 1 3/16	ALC 2457	4218 Cond T	1					
-10R	.025 X 10 X 17	ALC 2450	4200 Cond A		1				
-10L	.025 X 10 X 17	ALC 2450	4200 Cond A			1			
-9R	.025 X 10 1/2 X 17	ALC 2450	4200 Cond A				1		
-9L	.025 X 10 1/2 X 17	ALC 2450	4200 Cond A					1	

PARTS LIST PER ASSY.

HEAT TREAT	FINISH	DRAFT	CHECK	STRUCT.	MAT	APPROV	ENG
AN H-(1-0) NAVY SR 53	ZP	BARTMAN 12-11-41	PASCO 1-29-42	GERBER	TATE 3.6.42	FISCAL	J. HUDDLE

NAME COVER ASS'Y-CONTROLS-RUDDER PEDAL IDLER PULLEYS

CONSOLIDATED AIRCRAFT CORP. SAN DIEGO, CALIF.

OPP. HAND 28C5544R

DWG. D SIZE 28C5544

R 28

LET	ALTERATION	DATE	BY
A	-11 SUBST'D FOR -7 IN -10 SUB ASS'Y		
	⅛ DIM. ON -6 WAS 1 5/16 ; ± 1/32 TOL. ADDED	2-3-42	R.S.C.

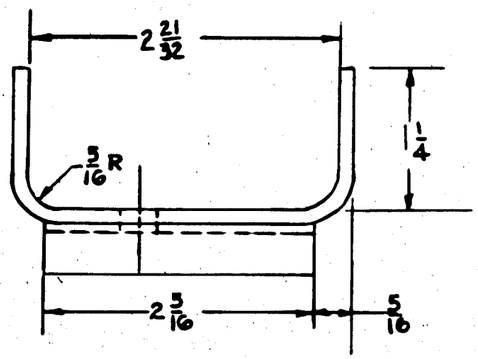

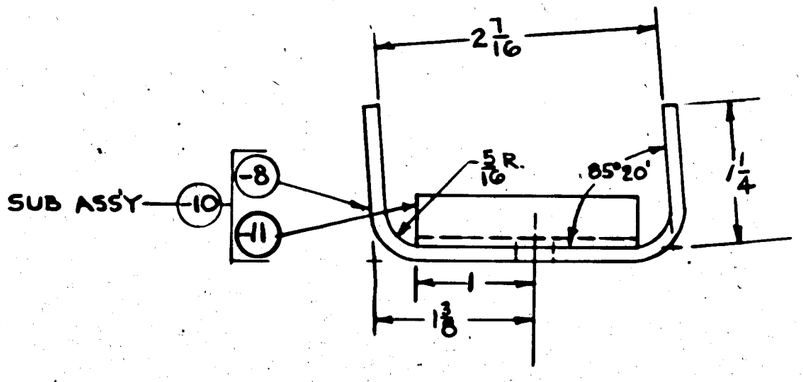

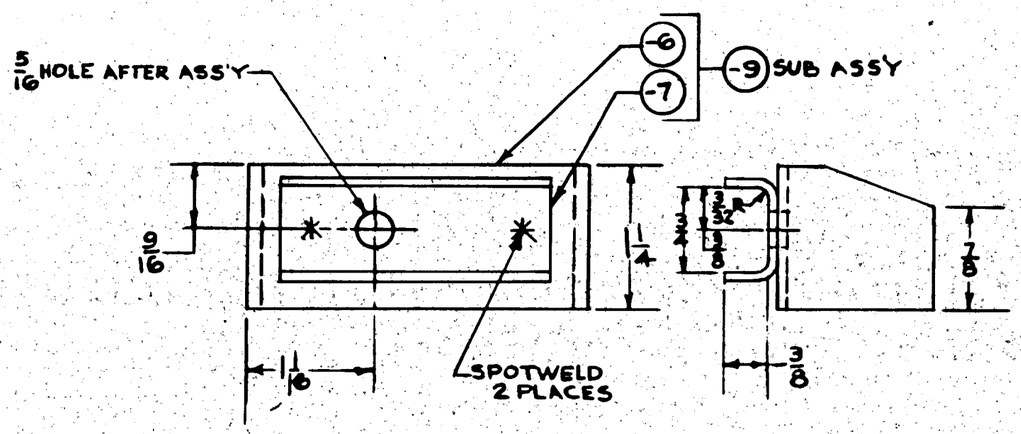

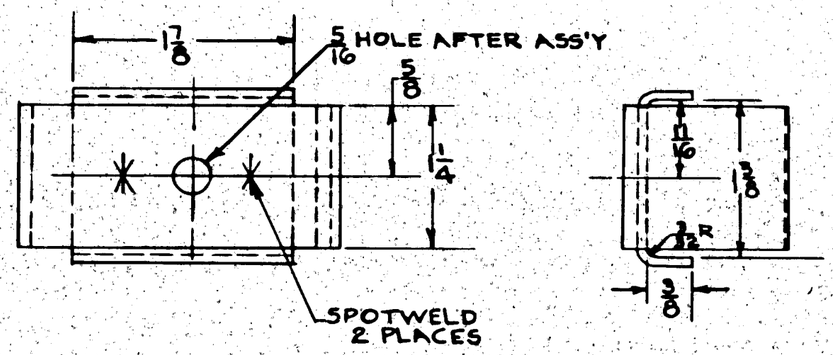

FINISH CODE	
Z	ANODIC TREATMENT
P	P-27 PRIMER
AP	ALUMINIZED PRIMER
C	CADMIUM PLATE

HULL #506, #553 TO #562 INCL. #578 & ON.

ASSY DASH NO.	MODEL	NEXT ASSY.	REQ.
-10	PBY-5A	28C5546	1
-9	PBY-5A	28C5546	1

REQUIREMENTS PER AIRPLANE

REPLACES — .22 CALC WT.

REPLACED BY — ACT WT.

UNLESS OTHERWISE SPECIFIED ± 1/32 : 1/4° — SCALE 12'-1'-0"

STAMP PART NUMBER WHERE SHOWN

PART NO.	STOCK	MATERIAL	SPEC.	LH REQ. -0	RH REQ. -2	LH REQ. -3	RH REQ. -4	LH REQ. -5	RH REQ.
-8	R5X5¾X1½	ALC 2450	47ABCOND A		1				
-11	081X2⅛X2¾	ALC 2450	47ABCOND A		1				
-10	SUB ASS'Y								
-7	081X2⅛X2⅜	ALC 2450	47ABCOND A			1			
-6	R5X6X1½	ALC 2450	47ABCOND A			1			
-9	SUB ASS'Y								

PARTS LIST PER ASS'Y.

AC 6-7-8 & -11		BRETHAUER	R.S.C.		FACHL
NAVY SR 53	Z P	1-12-42	1-29-42	2-4-42	2-6-42
HEAT TREAT	FINISH	DRAFT	CHECK	STRUCT. MAT	APPROV ENG.

NAME CLIPS ASS'Y-CONTROLS-SBAE RUDDER PULLEYS-BEARING

CONSOLIDATED AIRCRAFT CORP. SAN DIEGO, CALIF.

OPP. HAND

DWG. D SIZE — 28C5545

RUSH RELEASED 2-3-42

R

LET	ALTERATION	DATE	BY
A	Dim 4 was 4 3/8, 1 1/4 was 3, 80% was 23°	2-3-42	

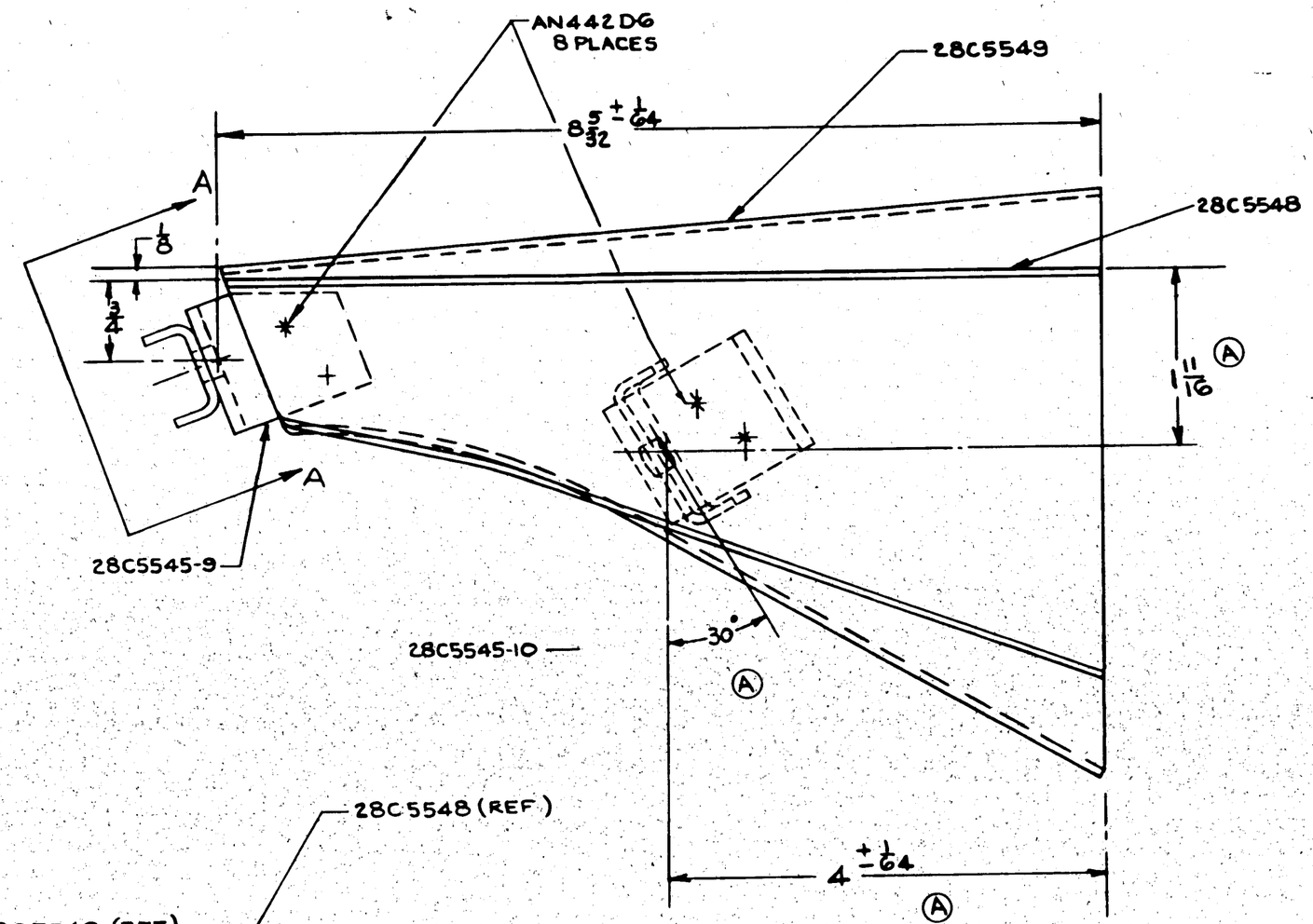

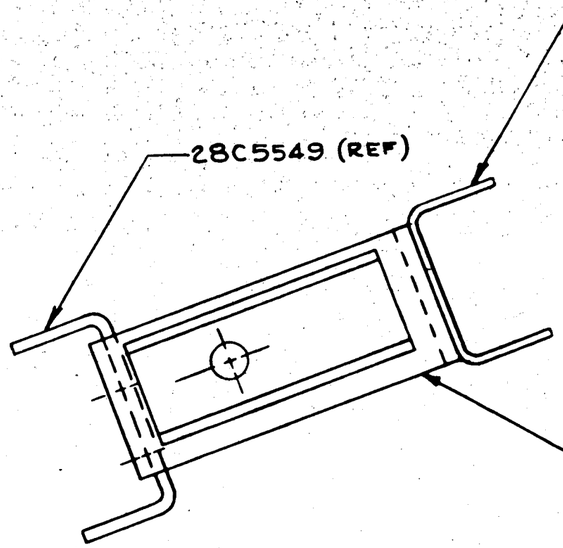

VIEW A-A

HULL #506, #553 TO #562 INCL. #578 & ON

RUSH RELEASED 2-3-42

FINISH CODE

Z	ANODIC TREATMENT
P	P-27 PRIMER
AP	ALUMINIZED PRIMER
C	CADMIUM PLATE

AN442D-6

ASSY. DASH NO.	MODEL	NEXT ASSY.	QTY.
	PBY-5A	28C5559	1

REQUIREMENTS PER AIRPLANE

REPLACES 28C5080 — CALC. WT. .69 lbs

REPLACED BY — ADD. WT.

LIMIT OF ENGINEERING CONTROL ± 1/4" ± 1/32 — SCALE 12"-1'-0"

STAMP PART NUMBER WHERE SHOWN

PART No.	STOCK	MATERIAL	SPEC.	LH REQ. -0	RH REQ. -2	LH REQ. -3	RH REQ. -4	LH REQ. -5	RH REQ.
28C5549				1	1				
28C5548						1	1		
28C5545-10				1					
28C5545-9					1				
4								1	

PARTS LIST PER ASSY.

AC — NAVY NONE — HEAT TREAT — ZP — FINISH

	DRAFTSMAN	CHECK	STRUCT	MAT	APPROV	ENG.
	1-13-42	1-29-42		3-6-42		

NAME BRACKET ASSY-CONTROLS-SBAE RUDDER PULLEYS

CONSOLIDATED AIRCRAFT CORP. SAN DIEGO, CALIF.

OPP. HAND

SPEC. D — DWG. 28C5546

RDD

LET	ALTERATION	DATE	BY
A	6 R ADDED	2-3-42	Bartram

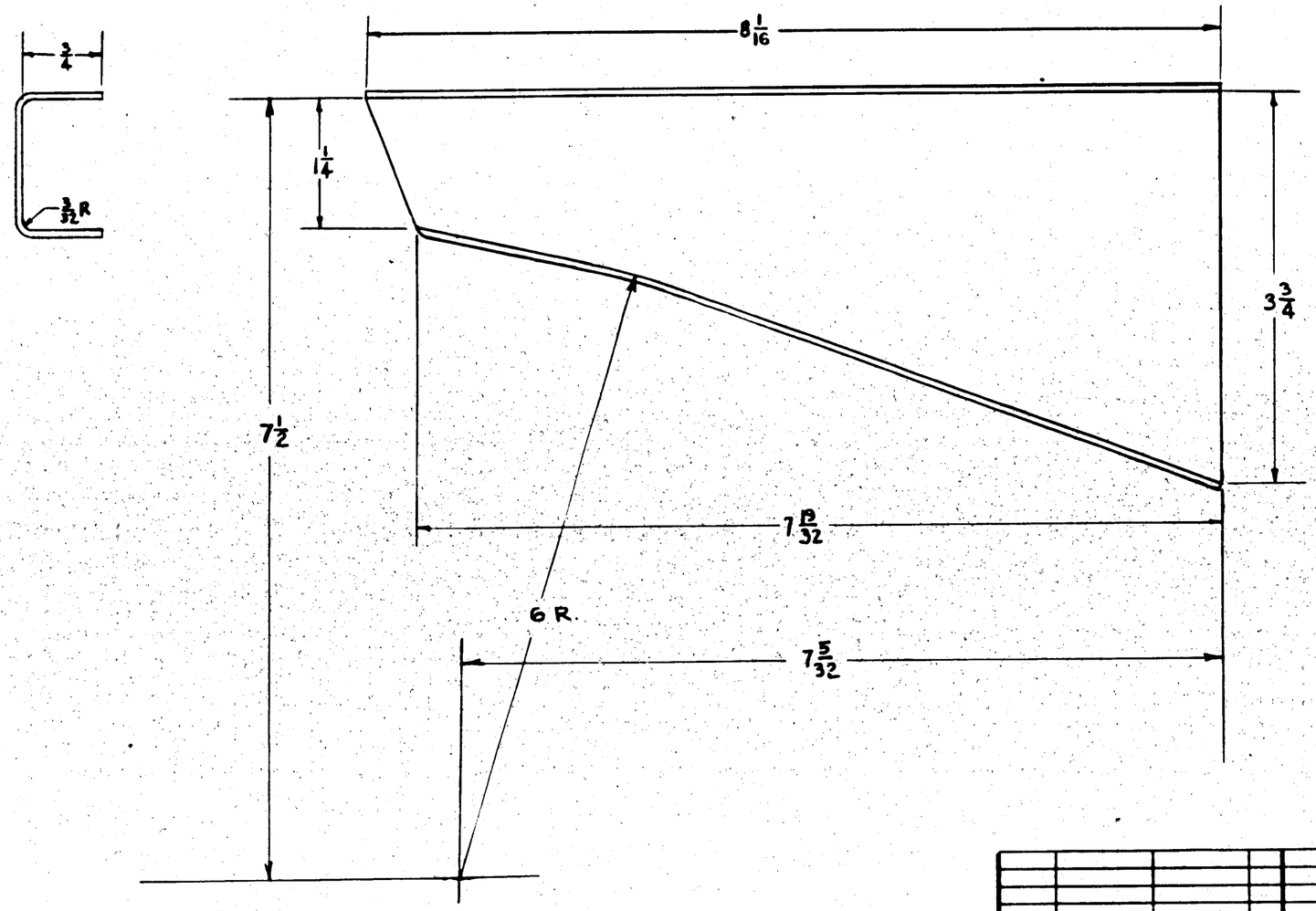

FINISH CODE

Z	ANODIC TREATMENT
P	P-27 PRIMER
AP	ALUMINIZED PRIMER
C	CADMIUM PLATE

HULL #506,553 TO #562 INCL., #5TB FON

ASSY. DASH NO.	MODEL	NEXT ASSY.	REQ'D
	PBY-5A	28C5546	1

REQUIREMENTS PER AIRPLANE

REPLACES — CALC WT. .18

REPLACED BY — ACT. WT.

SCALE 12" = 1'-0"

± 1/32

STAMP PART NUMBER WHERE SHOWN

PART NO.	STOCK	MATERIAL	SPEC.	LH REQ.	RH REQ.	LH REQ.	RH REQ.	LH REQ.	RH REQ.	LH REQ.	RH REQ.	LH REQ.	RH REQ.
	.064 x 9 1/2 x 10 1/4	ALCLAD	47A8 COND A										
PARTS LIST PER ASSY.				-0		-2		-3		-4		-5	

A C		1-9-42	1-29-42	Gerber		Pell	Jet Aland	
NAVY SR53	ZP	PASCO	BARTRAM		Tate 3-6-42		Nicke	
HEAT TREAT	FINISH	DRAFT	CHECK	STRUCT	MAT	APPROV	ENG.	

NAME — BRACKET-CONTROLS-SBAE RUDDER PULLEYS-LOWER R.H.

OPP. HAND

CONSOLIDATED AIRCRAFT CORP. SAN DIEGO, CALIF.

DWG. SIZE D — 28C5548

R DD

RUSH RELEASE 2-3-42

LET	ALTERATION	DATE	BY
A	1 3/16 DIM WAS 1 5/8 CUTOUT IN FLANGE ADDED	2-3-42	BOTTUM
B	ADDED 7/16 & 1 7/8 LOCATING DIMS FOR 1/2 HOLE / NOTE "1/2 DRILLED HOLE" MFG WT CHG.	3-16-42	WEINECK
C	1/8 R WAS 3/32 R & NOTE "1/2 HOLE WAS "1/2 DRILLED HOLE" NO WT CHG	3-21-42	WEINECK

EO 484715

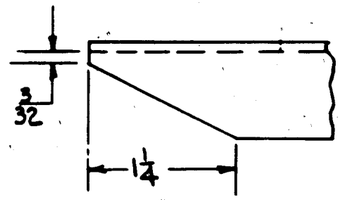

VIEW A-A

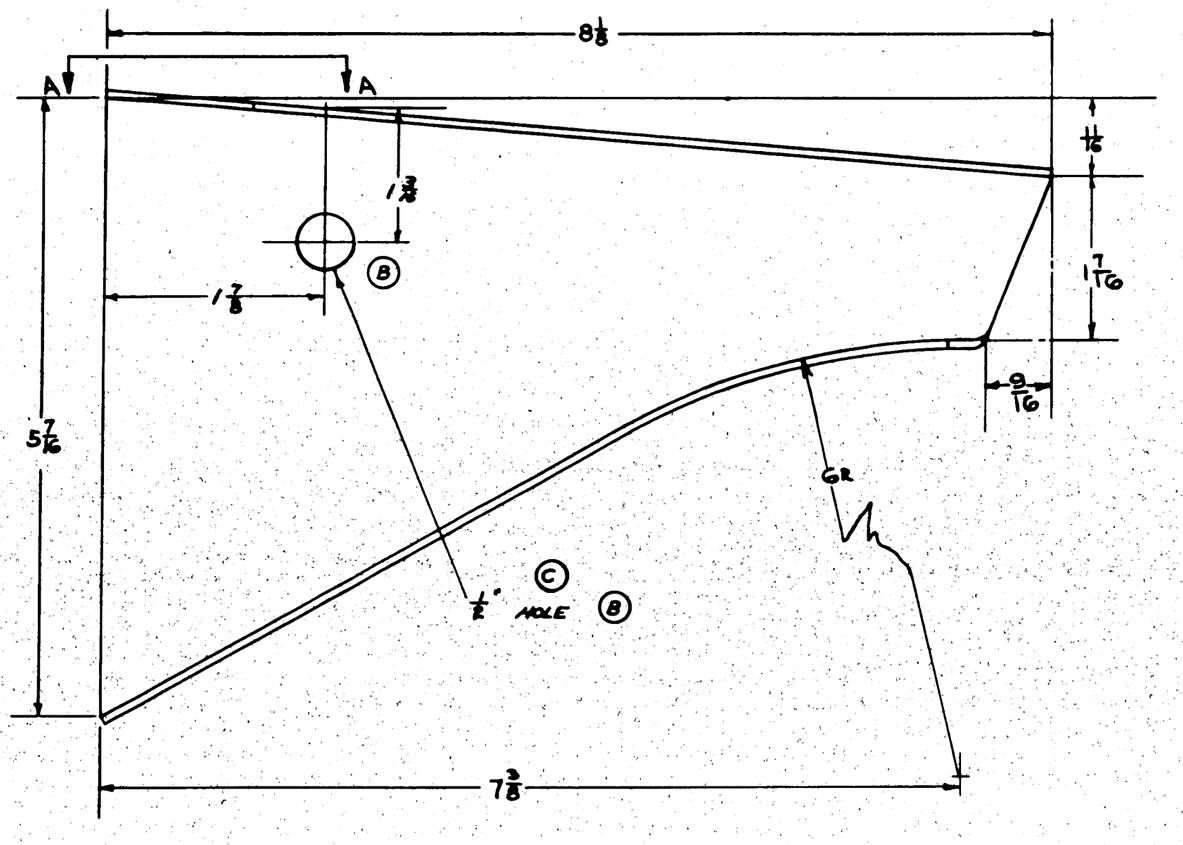

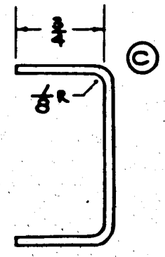

FINISH CODE	
Z	ANODIC TREATMENT
P	P-27 PRIMER
AP	ALUMINIZED PRIMER
C	CADMIUM PLATE

HULL #306 #553 TO 562 INCL, #578 & ON

ASSY. DASH NO.	MODEL	NEXT ASSY.	REQ'D.
	PBY5A	28C5546	1

REQUIREMENTS PER AIRPLANE

REPLACES	.29# CALC WT.
REPLACED BY	ACT. WT.

UNLESS OTHERWISE SPECIFIED + 1/32 − SCALE 12" = 1'-0"

STAMP PART NUMBER WHERE SHOWN

PART NO.	STOCK	MATERIAL	SPEC.	LH REQ.	RH REQ.	LH REQ.	RH REQ.	LH REQ.	RH REQ.	LH REQ.	RH REQ.	LH REQ.	RH REQ.
PARTS LIST PER ASSY.	.081 X 9 1/4 X 10 1/16	ALCLAD	47A8 COND A	-0		-2		-3		-4		-5	

A C		1-9-42	1-29 42	GERBER		PACHL	ALLORD	E.B.
NAVY SR 53	Z P	PASCO						
HEAT TREAT	FINISH	DRAFT	CHECK	STRUCT.	MAT	APPROV	ENG	

NAME BRACKET - CONTROLS-SBAE RUDDER CONTROL PULLEYS-LOWER-L.H.

OPP. HAND

CONSOLIDATED AIRCRAFT CORP. SAN DIEGO, CALIF.

DWG. SIZE D R

28C5549

RUSH RELEASE 2-3-42.

LET	ALTERATION	DATE	BY
A	PART COMPLETELY REDESIGNED	2-3-42	PASCO

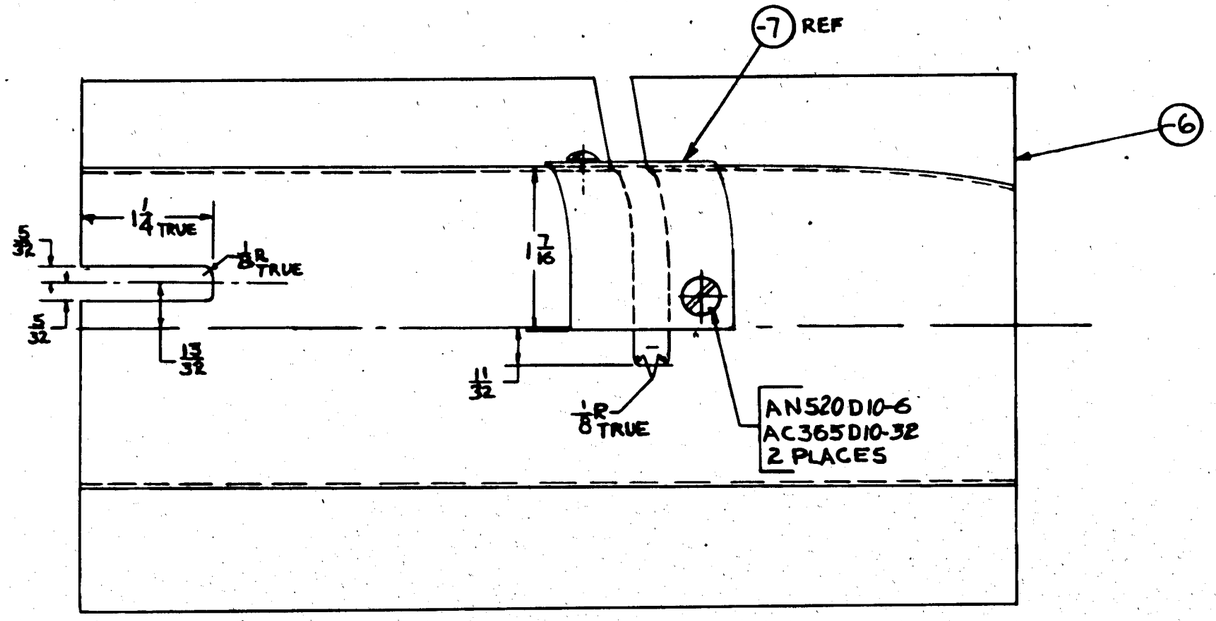

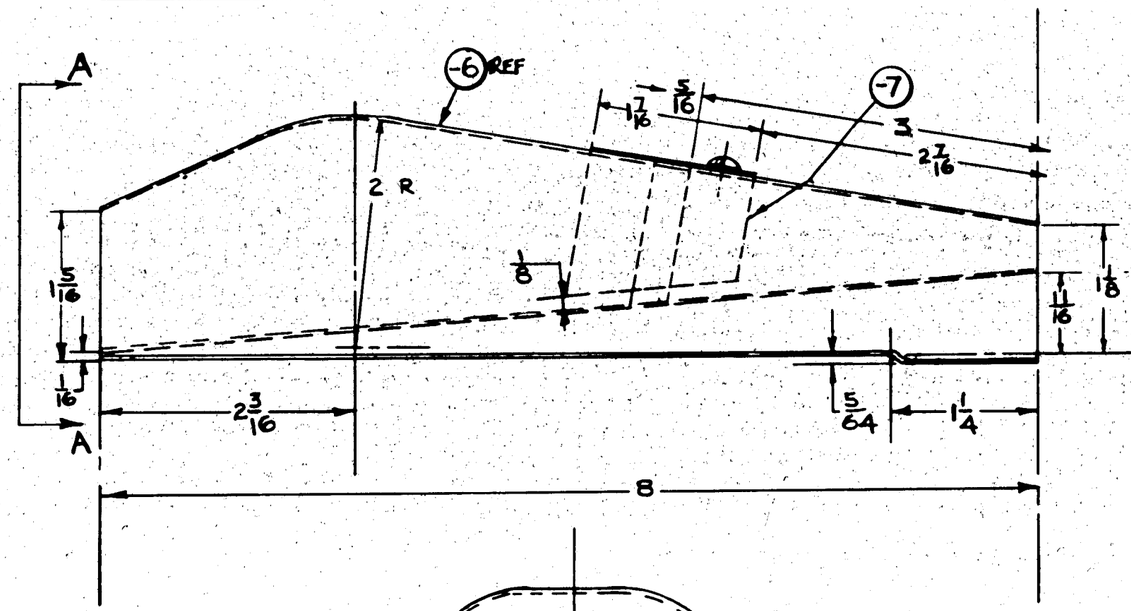

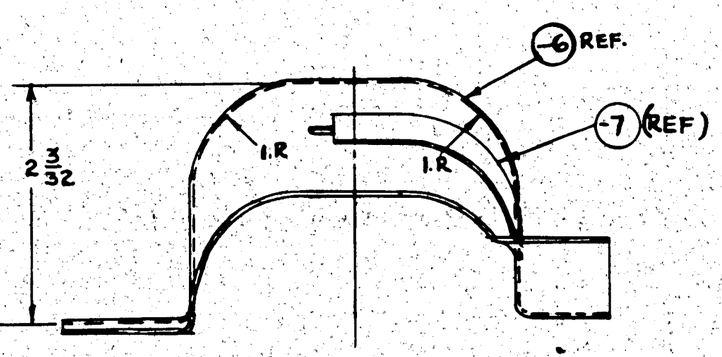

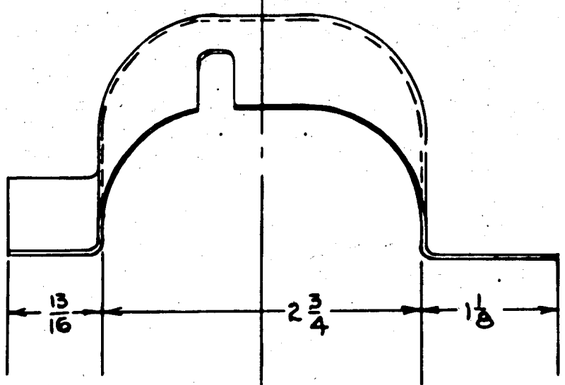

VIEW A-A

HULL #506, #553 TO #562 INCL. #578 & ON

NIS-4 CODE

Z	ANODIC TREATMENT
P	P-27 PRIMER
AP	ALUMINIZED PRIMER
C	CADMIUM PLATE

ASSY. DASH No.	MODEL	NEXT ASSY.	REQ.
	PBY-5A	28C5555	1

REQUIREMENTS PER AIRPLANE

REPLACES 28C2130-0, 28C2130-10 — CALC WT. .18

REPLACED BY — ACT. WT.

LIMIT ON DIMENSIONS UNLESS OTHERWISE SPECIFIED: ± 1/32 — SCALE 12" = 1'-0"

STAMP PART NUMBER WHERE SHOWN

PART No	STOCK	MATERIAL	SPEC	LH REQ. -0	RH REQ. -2	LH REQ. -3	RH REQ. -4	LH REQ. -5	RH REQ.
				AN520-D10-6					
				AC365D1032					
-7	.025 X 2 X 3 1/4	ALC 245T	47A8 COND T	1					
-6	.025 X 10 1/4 X 10 7/8	ALC 2450	47A8 COND A	1					

PARTS LIST PER ASSY.

AC (C-6) NAVY SR 53	ZP	DRAFTING 1-19-42	DRAFT	DASCO	GERBER		PAUL	ALDEN
HEAT TREAT	FINISH	1-29-42	CHECK	STRUCT.	MAT.	APPROV.	3-6-42	ENG.

NAME
COVER-CONTROLS-SBAE
RUDDER CONTROL PULLEYS

CONSOLIDATED AIRCRAFT CORP. SAN DIEGO, CALIF.

OPP. HAND

DWG. SIZE D — 28C5550

R DD

LET	ALTERATION	DATE	BY
A	HOLES REMOVED - PART DETAILED OVER	2-3-42	[illegible]
B.	ADDED DIM. 10° (IN VIEW A-A)		
	ADDED DIM 1 1/4, DIMS. 5 1/2, 15 7/8 & VAR WERE 5 15/16, 16, & 1/32 R.		
	RESP. ADDED AUX. VIEW NO		
	WT. CHG.	5-28-43	HARVEY

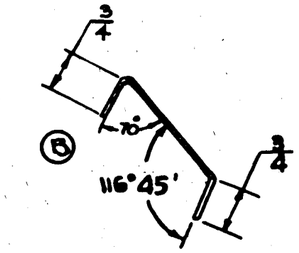

VIEW A-A

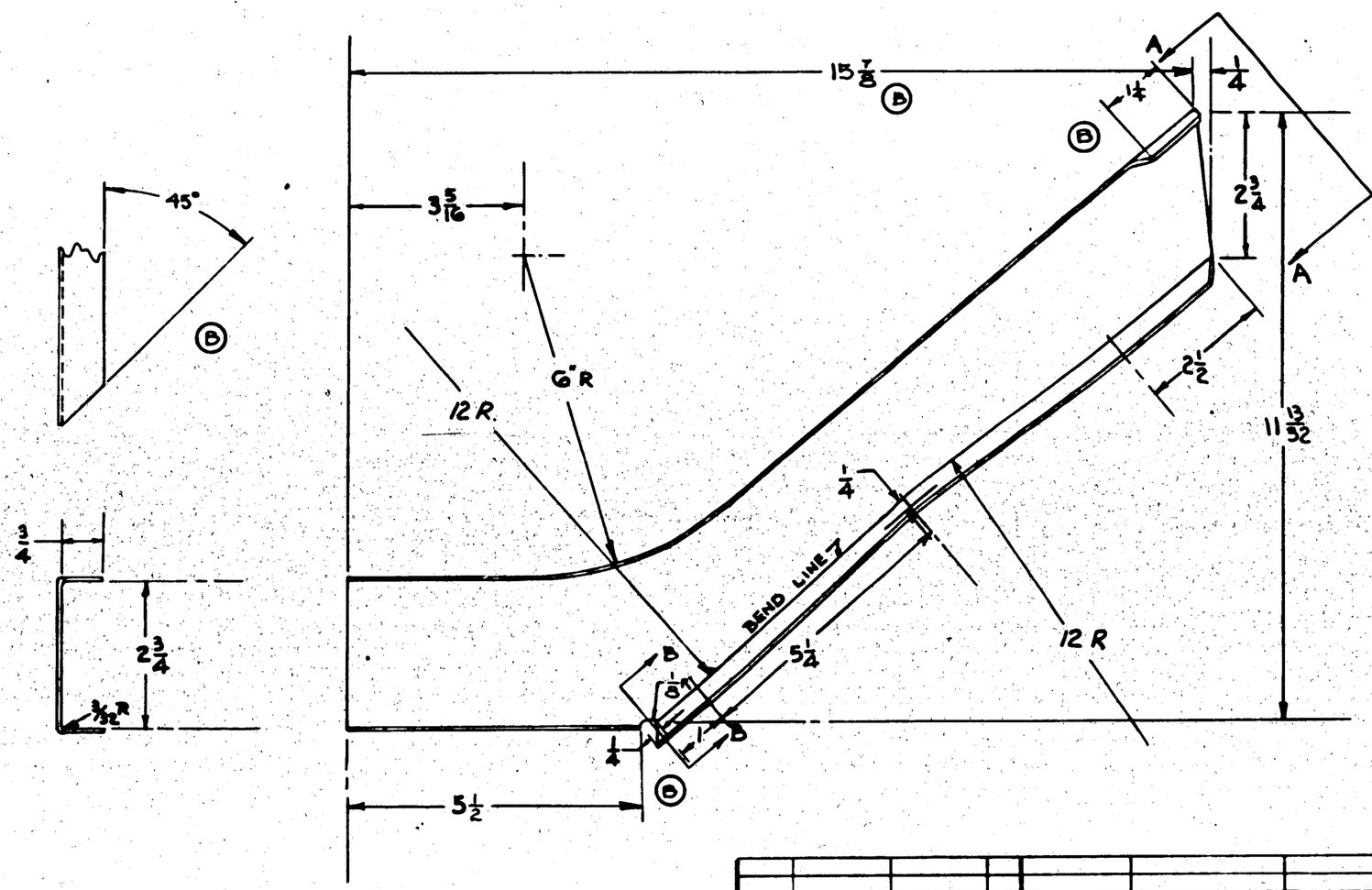

FINISH CODE	
Z	ANODIC TREATMENT
P	P-27 PRIMER
AP	ALUMINIZED PRIMER
C	CADMIUM PLATE

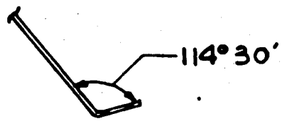

VIEW B-B

HULL #506, #553 TO #562, INCL. & #578 & ON

ASSY. DASH NO.	MODEL	NEXT ASSY.	REQ'D
-R	28-5AMN	28C5556	1
-L	28-5AMN	28C5556	1
-R	PBY-5A	28C5556	1
-L	PBY-5A	28C5556	1

REQUIREMENTS PER AIRPLANE

REPLACES

REPLACED BY

.47# CALC WT.

ACT. WT.

LIGHT ON DIMENSIONS UNLESS OTHERWISE SPECIFIED ± 1/32 : 1°

SCALE 6" = 1'-0"

STAMP PART NUMBER WHERE SHOWN

PART NO.	STOCK	MATERIAL	SPEC.	LH REQ. -0	RH REQ. -2	LH REQ. -3	RH REQ. -4	LH REQ. -5	RH REQ.
-6R	064 X 8 1/2 X 21 1/2	ALC 2450	AMS COND A	1					
-6L	064 X 8 1/2 X 21 1/2	ALC 2450	AMS COND A		1				

PARTS LIST PER ASSY.

A.C.		DRAFTSMAN	PASCO	STRESS		PROCESS	ALLOWANCE
NAVY SR 53	ZP	2-11-41	12-11-41	12-18-41	TATE	3-6-42	[illegible]
HEAT TREAT	FINISH	DRAFT	CHECK	STRESS	MAT	APPROV	ENG

NAME BRACKET-CONTROLS RUDDER PEDAL IDLER PULLEY - AFT

CONSOLIDATED AIRCRAFT CORP. SAN DIEGO, CALIF.

OPP HAND 28C5551-R

DWG. D. SIZE

28C5551

RUSH RELEASED 2-3-42

E.B.

R

LET	ALTERATION	DATE	BY
A	PART EXTENDED ONTO 0 ± 1/32 RAD. ADDED	2-3-42	[illegible]
B	ADDED 70° BEND IN FLANGE IN VIEW A-A ADDED 1/4 DIM. ADDED AUXILIARY VIEW & DIM. 45° DIMS. 15 3/4 WAS 15 7/8 & 15 3/8 WAS 5 5/8. NO WT. CHG.	8-28-43	THAGARD
C	IN B/M .064 X 8 1/2 X 21 1/2 ALC. 24ST, QQ-A-362T WAS -6 A/D, .064 X 8 1/2 X 21 1/2 ALC 24SO, 47AB COND. A (IEA) NO WT. CHG.	10-21-43	[illegible]

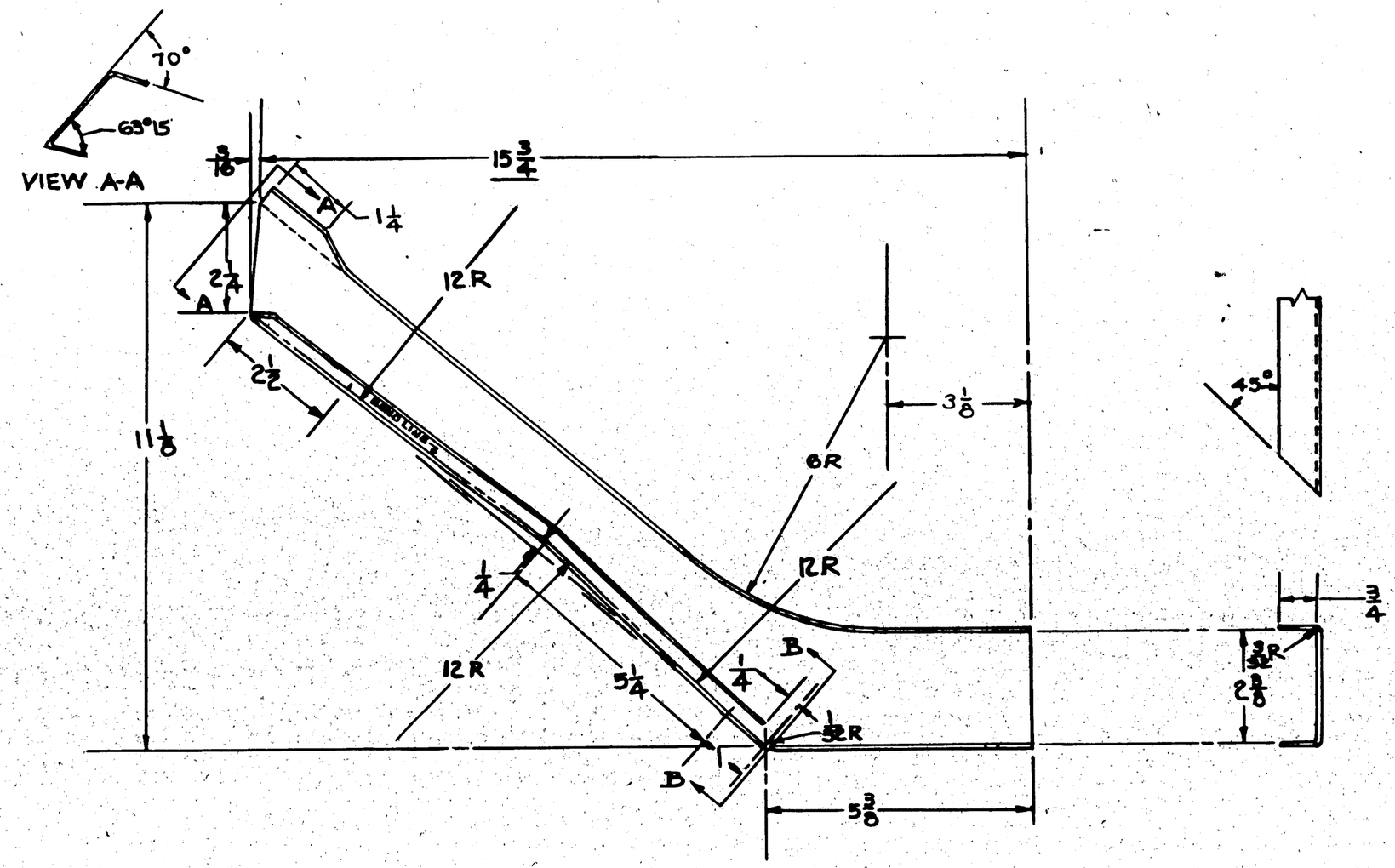

FINISH CODE	
Z	ANODIC TREATMENT
P	P-27 PRIMER
AP	ALUMINIZED PRIMER
C	CADMIUM PLATE

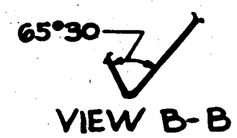

HULL # 506 # 553 TO # 562 INCL } # 578 & ON.

ASSY. DASH NO.	MODEL	NEXT ASSY.	QTY.
-R	28-5AMN	28C5556	
-L	28-5AMN	28C5556	
-R	PBY-5A	28C5556	
-L	PBY-5A	28C5556	

REQUIREMENTS PER AIRPLANE

REPLACES — Calc. Wt. 38

REPLACED BY — Act. Wt.

SCALE 8"=1'-0"

STAMP PART NUMBER WHERE SHOWN

.064 X 8 1/2 X 21 1/2 ALC 24ST QQ-A-362T

PART NO	STOCK	MATERIAL	SPEC.	LH REQ.	RH REQ.	LH REQ.	RH REQ.	LH REQ.	RH REQ.	LH REQ.	RH REQ.	LH REQ.	RH REQ.
PARTS LIST PER ASSY.				-0		-2		-3		-4		-5	

AC		DRAFTING PROG.	[illegible]	[illegible]	[illegible]	[illegible]	[illegible]
NAVY SR 53	ZP	12-11-41	12-14-41	12-24-41	DATE	7-6-42	[illegible]
HEAT TREAT	FINISH	DRAFT	CHECK	STRUCT	MAT	APPROV	ENG.

NAME BRACKET - CONTROLS RUDDER PEDAL IDLER PULLEY FWD

OPP. HAND 28C5552-R

CONSOLIDATED AIRCRAFT CORP. SAN DIEGO, CALIF.

DWG SIZE D — 28C5552

RUSH RELEASED 2-3-42

28C5552

LET	ALTERATION	DATE	BY

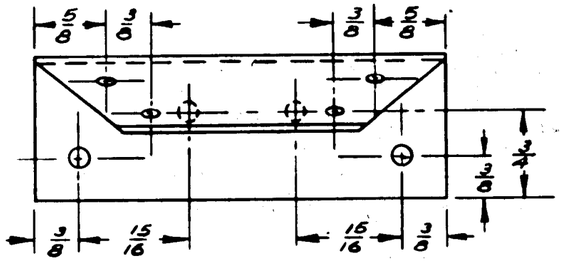

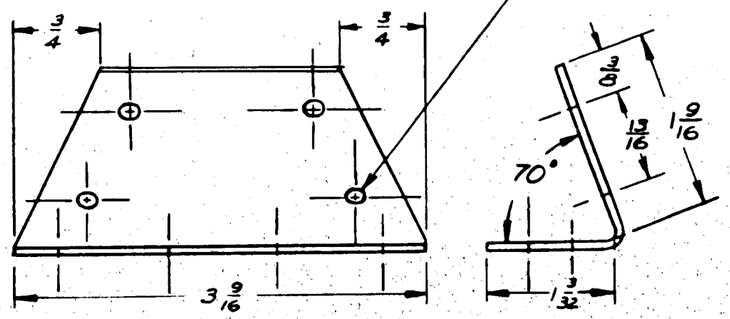

DETAIL -10

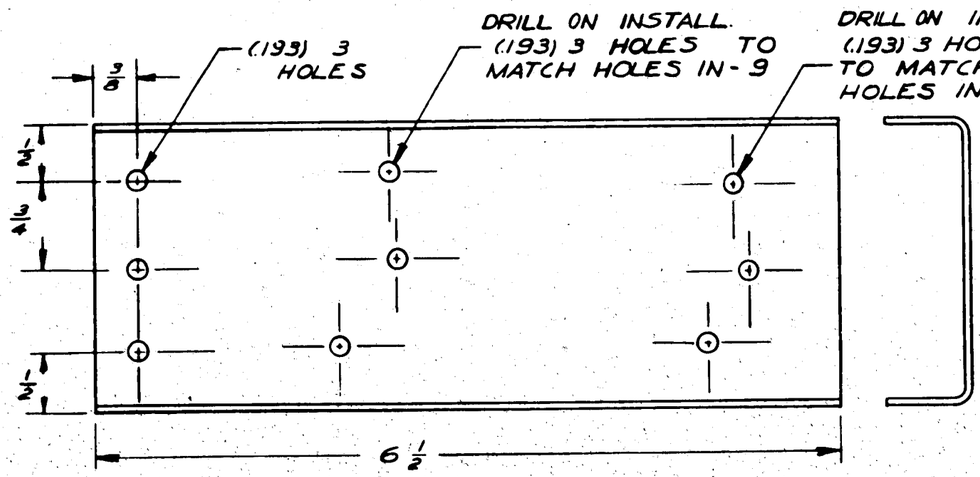

DETAIL -7

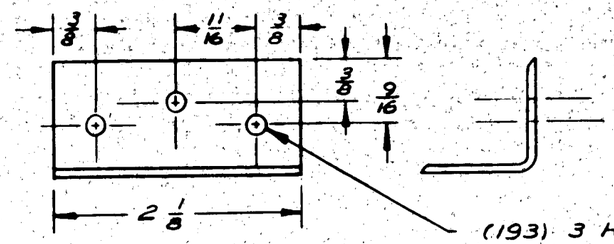

DETAIL -8

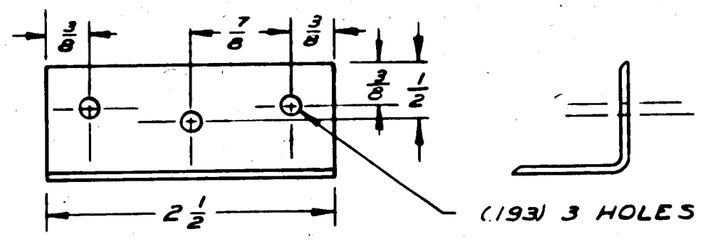

DETAIL - 9

ASSY. DASH No.	MODEL	NEXT ASSY.	REQ.
REQUIREMENTS PER AIRPLANE			
REPLACES		CALC WT.	
REPLACED BY		ACT. WT.	
UNLESS OTHERWISE SPECIFIED ± 1/32 ± 1/2°		SCALE 12"=1'-0"	
STAMP PART NUMBER WHERE SHOWN			

SEE SHEET 1 FOR B/M

-6 PART No	STOCK	MATERIAL	SPEC.	LH REQ.	RH REQ.	LH REQ.	RH REQ.	LH REQ.	RH REQ.	LH REQ.	RH REQ.	LH REQ.	RH REQ.
PARTS LIST PER ASSY.				-0		-2		-3		-4		-5	

A.C.		MEADOWS						
NAVY		6-23-43	7-3-43					
HEAT TREAT	FINISH	DRAFT	CHECK	STRUCT	MAT	APPROV	ENG.	

NAME INST. - CONTROLS RUD. PEDALS & SBAE PULLEYS

OPP. HAND

CONSOLIDATED VULTEE AIRCRAFT CORP. WF SAN DIEGO DIVISION . . SAN DIEGO, CALIF.

DWG. SIZE D — 28C5555 SHEET 2 OF 2

R

28C5555

LET	ALTERATION	DATE	BY
A	AN4D-2 WAS AN442	2-14-42	[illegible]
	ADDED Y/N, DIM. E WAS FOR.		
B	REVISED [illegible]		
	28C5547-6 (REQ'D 1 LH) TO 28C5547-7		
	(REQ'D 1 RH) ADDED NOTE 28C5547-7		
	----- TIME "TO DWG. FACE (DECREASE) [illegible]		STONE
C	REPL'D. 28C5547-6 (1 LH) & -7 (1 RH)		
	REPL'D. WITH 28C5547 (2 R.H.)		
	REV'D. NOTE "28C5547-7 ... TIME" [illegible]		Wernet
D	28C5551-R WAS 28C5551-L.		
	28C5552-R WAS 28C5552-L		
	NO WT. CHG. REVISED B/M	6-22-42	DAPHNE
E	REMOVED DIMS. 8 3/16, 3 5/16 &		
	24°40' 13 3/16 WAS 13 7/8; ADDED 8 1/8,		
	2 1/16, 1 7/8, 9/16. ADDED Q4004-0-5		
	(1 LH & 1 RH), Q4004-2-5 (1 LH & 1 RH) &		
	AN380C2-2 (2 LH & 2 RH) NO. WT. CHG.	9-29-42	RANCH

E.O.# A55253

E.O. A72512

AN4D-2
AC365D428
4-PLACES

Q4004-0-5 (1)
AN 380C2-2(2)

Q4004-2-5 (1)
AN 380C2-2(2)

28C5547

28C5552-R

28C5551-R

13 3/8

8 1/8

9/16

65°-20'

1 7/8

2 5/16

2 15/16

A

1/2

3/4 (REF)

VIEW A-A

FINISH CODE	
Z	ANODIC TREATMENT
P	P-27 PRIMER
AP	ALUMINIZED PRIMER
C	CADMIUM PLATE

HULL #506 #5537 D #562 INCL. #578 F ON

ASSY. DASH No.	MODEL	NEXT ASSY.	REQ.
-R	28-5AMN	28C5565	1
-L	28-5AMN	28C5555	1
-R	PBY-5A	28C5555	1
-L	PBY-5A	28C5559	1

REQUIREMENTS PER AIRPLANE

REPLACES (-R) 28C5528, (-L) 28C5520

REPLACED BY

L.T.S.# GALC WT.

ASY. WT.

LIMIT ON DIMENSIONS UNLESS OTHERWISE SPECIFIED ± 1/32, 1/40

SCALE 6"=1-0"

STAMP PART NUMBER WHERE SHOWN

PART No.	STOCK	MATERIAL	SPEC	LH REQ.	RH REQ.	LH REQ.	RH REQ.	LH REQ.	RH REQ.	LH REQ.	RH REQ.	LH REQ.	RH REQ.
				-0		-2		-3		-4		-5	
AN4D-2				1	1								
AC365D428				4	4								
Q4004-0-5				1	1								
Q4004-2-5				1	1								
AN380C2-2				2	2								
28C5552-R				1									
28C5552-L					1								
28C5551-R				1									
28C5551-L					1								
28C5547				2	2								

PARTS LIST PER ASSY.

AC

NAVY NONE — HEAT TREAT

ZP — FINISH

BRITTON PISCO — DRAFT 12-15-41; CHECK 12-16-41; STRUCT 12-18-41; MAT TATE 2-6-42; APPROV 2-6-42; ENG

NAME BRACKET ASSY-CONTROLS-RUDDER PEDAL IDLER PULLEYS

OPP. HAND 28C5556-R

CONSOLIDATED AIRCRAFT CORP. SAN DIEGO, CALIF.

DWG. SIZE D — 28C5556

RUSH RELEASED 2-3-42

DD R

LET	ALTERATION	DATE	BY
A	DIM. 1 13/16 WAS 2 13/16; 6 3/8 WAS 7 1/4; 10 WAS 10 3/8; 13 1/4 WAS 14 1/8; ADDED 30° CUT OFF.	2-1-42	STEVEN
B	28C5562-700 (1 REQ) & 28C5562-701 (2 REQ) WAS 28C5560 (3 REQ) ON FACE & IN B.M. NO WT. CHANGE	7-1-42	PARKER

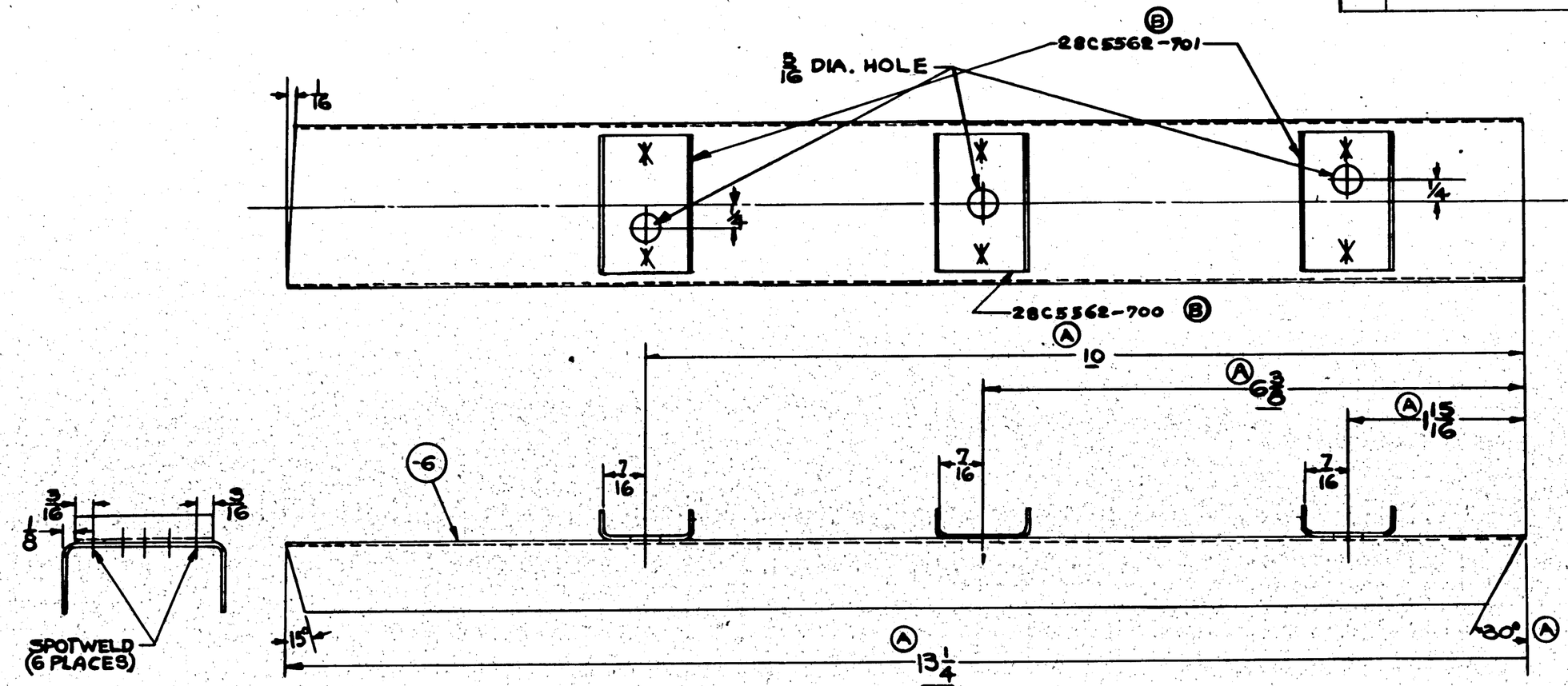

FINISH CODE	
Z	ANODIC TREATMENT
P	P-27 PRIMER
AP	ALUMINIZED PRIMER
C	CADMIUM PLATE

CONT 91876

146 AIRPLANES OF CONT. # 88476 (S.O. 953-13/-18)

RUSH RELEASED 2-2-42

ASSY. DASH NO.	MODEL	NEXT ASSY.	QUAN.
	PBY5B	28C5560	1
	PBY5	28C5560	1
	PBY-5A	28C5560	1

REQUIREMENTS PER AIRPLANE

REPLACES — CALC WT. .256#

REPLACED BY — ACT. WT.

SCALE 12" = 1'-0" ± 1/32

STAMP PART NUMBER WHERE SHOWN

28C5562-701 2/1
28C5562-700

PART NO.	STOCK	MATERIAL	SPEC.	LH REQ.	RH REQ.	LH REQ.	RH REQ.	LH REQ.	RH REQ.	LH REQ.	RH REQ.	LH REQ.	RH REQ.
-6	Y-10A-B0T X 13/4	—	—										
PARTS LIST PER ASSY.				-0		-2		-3		-4		-5	

A C		H5-42	1-30-42					
NAVY NONE	Z-P	STEVEN	PASCO		TATE			
HEAT TREAT	FINISH	DRAFT	CHECK	STRUCT	MAT	APPROV	ENG	

NAME BRACKET - FOLLOW-UP CABLES STA. #1 UPPER PULLEY

OPP. HAND —

CONSOLIDATED AIRCRAFT CORP. SAN DIEGO, CALIF.

DWG. SIZE D — 28C5559

R 5/27/42

E.O.A71542

LET	ALTERATION	DATE	BY
A	Q4303-D1 WAS Q4303-AD1		
	ADDED AN442D5 (3 PLACES)		
	& SEC. A-A. WT. CHG. NEG.	10-23-42	MOE

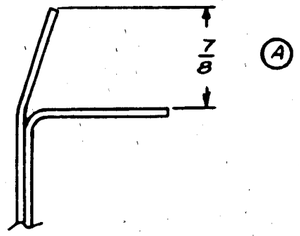

SECTION AA

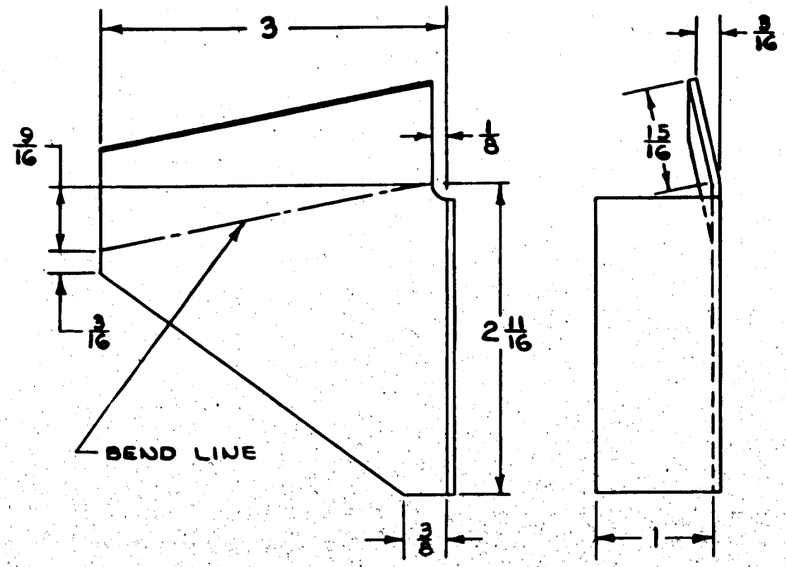

DETAIL OF -6

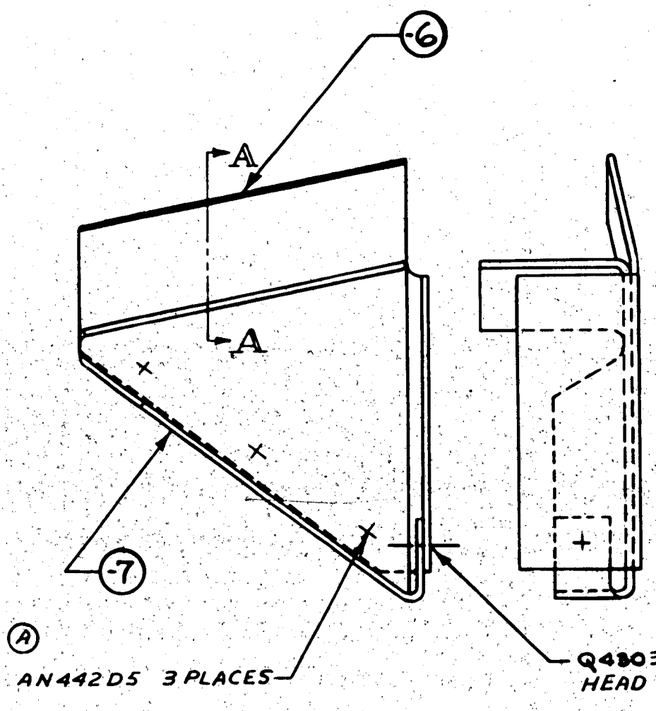

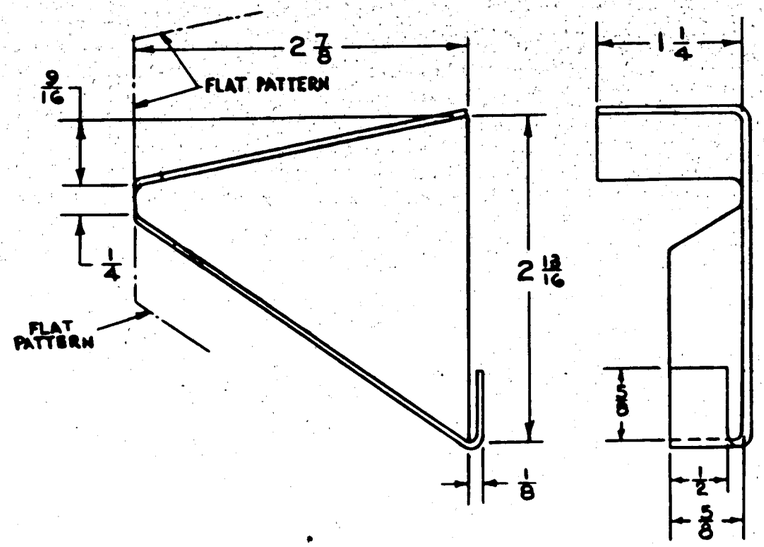

DETAIL OF -7

FINISH CODE	
Z	ANODIC TREATMENT
P	P-27 PRIMER
AP	ALUMINIZED PRIMER
C	CADMIUM PLATE

C.*88477
C.*77713 C.*88476
C.*91876

ASSY. DASH NO.	MODEL	NEXT ASSY.	REQ.
	28-5AW	28C5570	1
	PBY-5B	28C5570	1
	PBY-5A	28C5570	1
	PBY-5	28C5570	1

AN442-D5
Q4303-D4

REQUIREMENTS PER AIRPLANE

REPLACES — .14 CALC. WT.

REPLACED BY — ADV. WT.

SCALE 12"=1'-0"

STAMP PART NUMBER WHERE SHOWN

PART NO.	STOCK	MATERIAL	SPEC.	LH REQ. -0	RH REQ. -0	LH REQ. -2	RH REQ. -2	LH REQ. -3	RH REQ. -3	LH REQ. -4	RH REQ. -4	LH REQ. -5	RH REQ. -5
-7	.064 x 3½ x 5	ALC. SHT.	47A8-T	1									
-6	.064 x 3 x 4¼	ALC. SHT.	47A8-T		1								

PARTS LIST PER ASSY.

AC
NAVY NONE
HEAT TREAT

ZP 2AP.
FINISH

	DRAWN MAN	JONES	GERBER	ALLAN	Goldman	ZUCK
DRAFT	4-15-42	4-15-42		4-24-42		WOLD
CHECK						
STRUCT						
MAT						
APPROV						
ENG.						

NAME ASS'Y. - CONT. - AIL. & ELEV. LOCK SOCKET - SUPPORT

OPP. HAND

SIZE D

28C5568

CONSOLIDATED AIRCRAFT CORP. SAN DIEGO, CALIF.

DRAWN AS PER E.O. A95824

LET	ALTERATION	DATE	BY

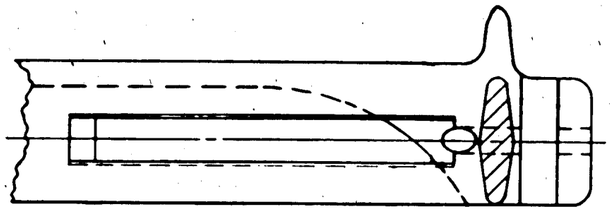

SECTION A-A

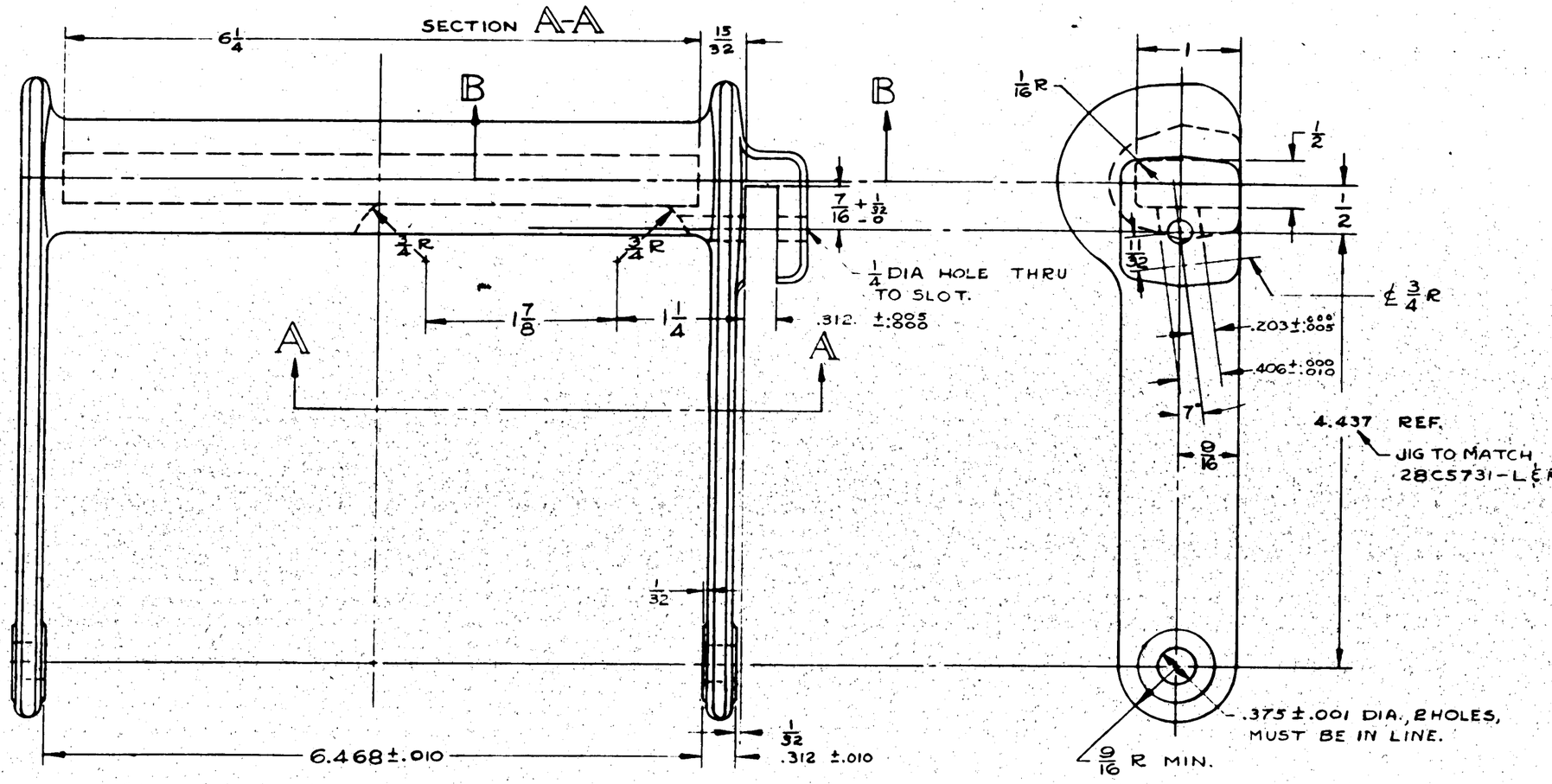

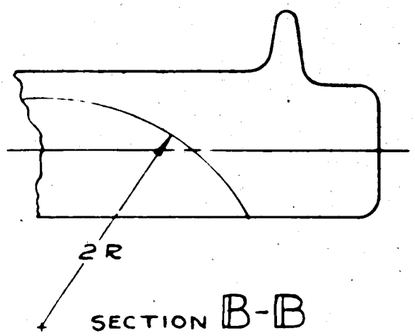

SECTION B-B

NOTES-

1. 28C5587 L/R IS INTERCHANGEABLE WITH 28C5702 L/R.

NOA(S)1464 & SPARES

ASSY. DASH NO.	MODEL	NEXT ASSY.	REQ.
-R	PBY-5A	28C5708	2
-L	PBY-5A	28C5705	2

REQUIREMENTS PER AIRPLANE

REPLACES

REPLACED BY

.79 CALC WT.

ACT. WT.

UNLESS OTHERWISE SPECIFIED ± 1/32, ∠ ± 1° NOTED

SCALE 12" = 1'-0"

STAMP PART NUMBER WHERE SHOWN

PART NO	STOCK	MATERIAL	SPEC	LH REQ. -0	RH REQ. -2	LH REQ. -3	RH REQ. -4	LH REQ. -5	RH
-R	MAKE FROM 28C5586								
-L	MAKE FROM 28C5586								

PARTS LIST PER ASSY.

APPROVED FOR TOOLING BY

V Brown 3-19-43

A C		Polish Dime						
NAVY NONE	Z-P-2 GP	4-23-43	4/10					
HEAT TREAT	FINISH	DRAFT	CHECK	STRUCT	MAT		APPROV	ENG

NAME PEDAL-CONTROLS-BRAKE

OPP HAND 28C5587-R

CONSOLIDATED AIRCRAFT CORP. OF SAN DIEGO, CALIF.

DWG D SIZE 28C5587

28C5587 R

LET	ALTERATION	DATE	BY
A	ON FACE REMOVED NOTE "DIRECTION OF PULL ON BRKT. 90°"		
	NO WT. CHG	7-4-43	LEESE

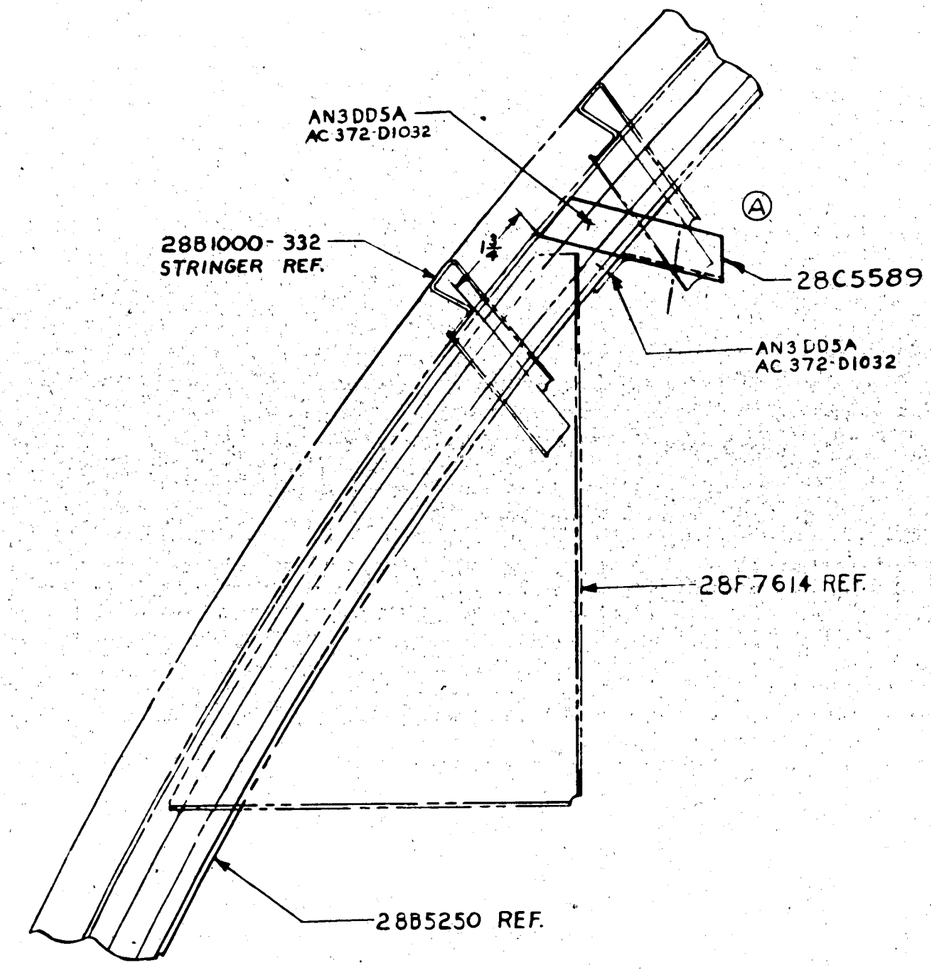

VIEW LOOKING F'W'D.
PORT SIDE

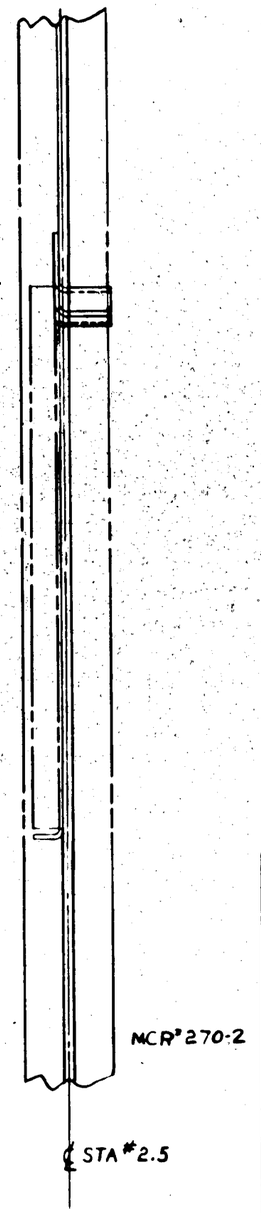

MCR #270-2

APPROVED FOR
TOOLING BY
GORSLINE 7-17-43

ASSY. DASH NO.	MODEL	NEXT ASSY.	REQ.
	PBY-5A	28C5133	1

REQUIREMENTS PER AIRPLANE

REPLACES 28C5126	.053 CALC WT.	
REPLACED BY	ACT. WT.	
LIGHT ON DIMENSIONS UNLESS OTHERWISE SPECIFIED ± 1/32	SCALE 6"=1'-0"	

STAMP PART NUMBER WHERE SHOWN

PART NO	STOCK	MATERIAL	SPEC	LH REQ. -0	RH REQ. -0	LH REQ. -2	RH REQ. -2	LH REQ. -3	RH REQ. -3	LH REQ. -4	RH REQ. -4	LH REQ. -5	RH REQ. -5
AC372-D1032					2								
AN3DD5A					2								
28C5589					1								

PARTS LIST PER ASSY.

AC		STEWART		
NAVY	Z-P-GP	6-30-43		
HEAT TREAT	FINISH	DRAFT	CHECK STRUCT MAT APPROV ENG	

NAME INSTALLATION- FOLLOW-UP CABLE STA. #2.5 PULLEY BRKT.

OPP HAND

CONSOLIDATED VULTEE AIRCRAFT CORP. SAN DIEGO DIVISION . . SAN DIEGO, CALIF.

DWG D 28C5588

SIZE

7-20-43

R 28C5588

LET	ALTERATION		
A	INFORMATION ADDED TO LINE DRILL NOTE	8-9-41	HALLAND
B	ADDED -2 ASSY. -E & -0 REDUCED -0R REQUIREMENTS FROM 2 TO 1 PER AIRPLANE	9-30-41	MITEK
C	17/32 DIM. WAS 15/32	12-11-41	BURDSHAW
D	CHG'D MATL OF -6 & -8 FROM 14ST TO ASIST; SPEC FROM M-2272 TO 4647-GR3; HEAT TREAT FROM 65,000 #/□" TO 90,000 #/□". WT CHG NEG	5-23-42	CLARK
E	CHG'D FINISH NOTES: 2P-20P WAS Z-P-2TP; CHG'D NOTE: ALL FILLET RADII 5/16 WAS 3/16, ADDED FORGING OUTLINE; ADDED NOTE "ALL CORNERS 1/8 R ADDED 3/8 R & 5/16 R REMOVED 7/16 R. NO WT CHG	8-28-42	CRAIN
F	ON FACE OF DWG REMOVED NOTE ON .7" STAMP PART Nº HERE "F" ADDED NOTE "FORGE PART Nº ... FINISHED PART Nº" FOR -6 & -7 & -8 & -9 (WT CHG NEG)	5-4-43	NOBLE

FORGING NOT AFF

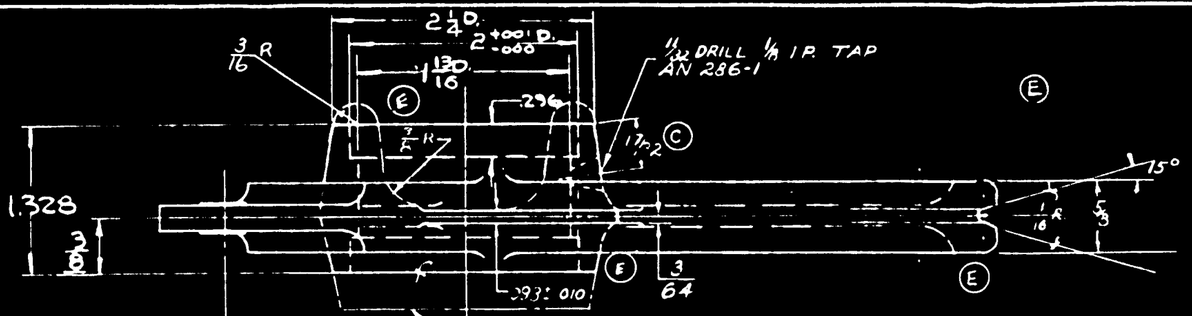

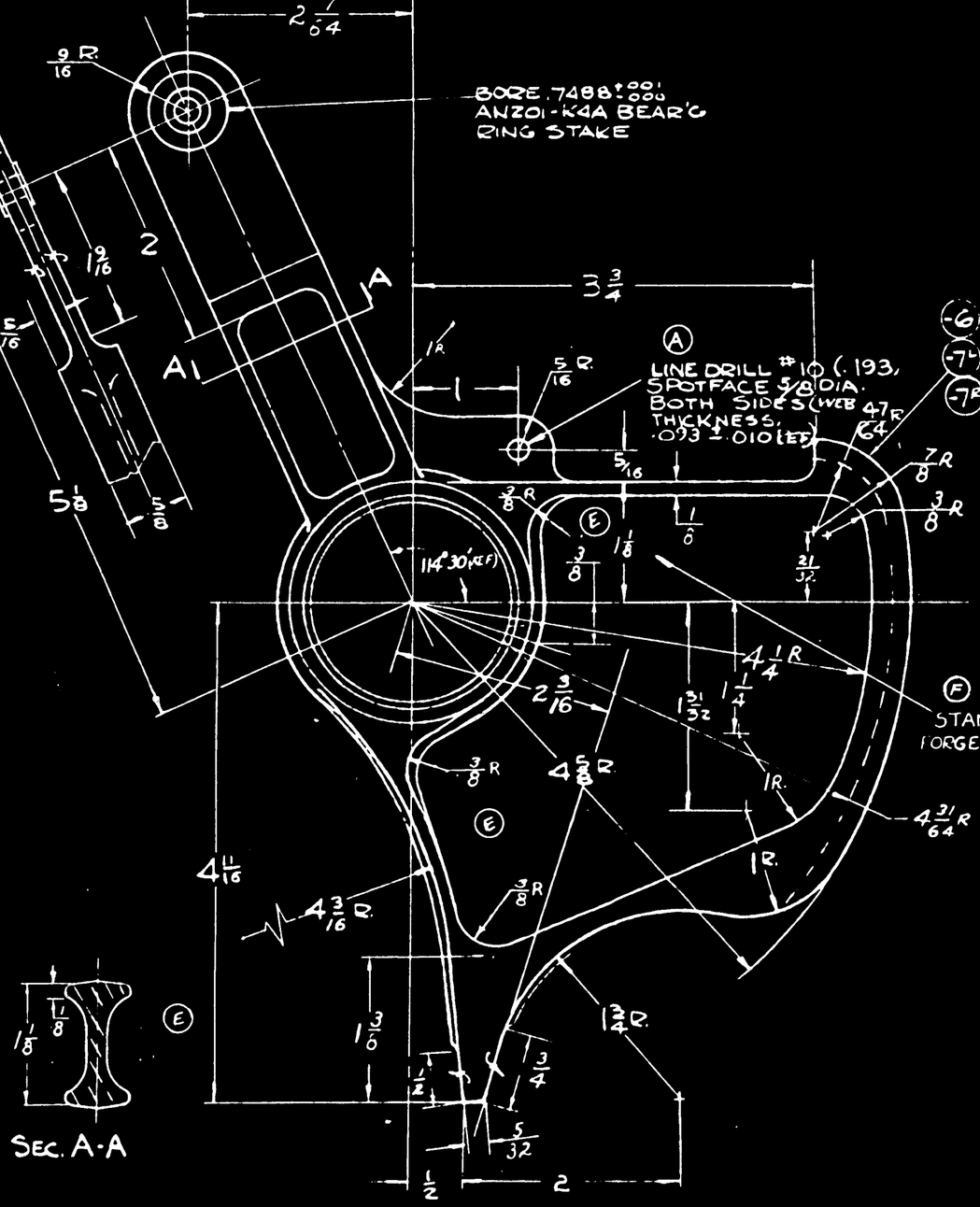

SEC. A-A

-0 ASS'Y (LEFT HAND SHOWN)
SCALE:- 12 · 1-0"

(-6) ROUGH FORGING
(-7R) H.T. 44,000 #/□" FINISH Z-P 2GP FINISHED FORGING } (E) -0 ASSY

(A) LINE DRILL #10 (.193) SPOTFACE 5/8 DIA. BOTH SIDES (WEB THICKNESS, .093 ± .010 (REF))

(F) STAMP FINISHED PART Nº
FORGE PART Nº IN 1/8 RAISED LETTERS

-2	28-SAMN	28C5705-R	1
-CR	28-SAMN	28C5705R	1
-CL	28-SAMN	28C5705L	2
-2	2S-SAMC	28C5705-R	1
-2	PBY-5A	28C5705-R	1
-0R	2S-SAMC	28C5705R	1
-0L	2S-SAMC	28C5705L	2
-0R	PBY-5A	28C5705R	1
-0L	PBY-5A	28C5705L	2

ASSY DASH NO. | MODEL | NEXT ASSY | QTY

REQUIREMENTS PER AIRPLANE

REPLACED BY: | REPLACES: 1.2 CAT. A

1/32 & 1/2° | SCALE: NOTED | ACT. WT.

STAMP PART NUMBER WHERE SHOWN

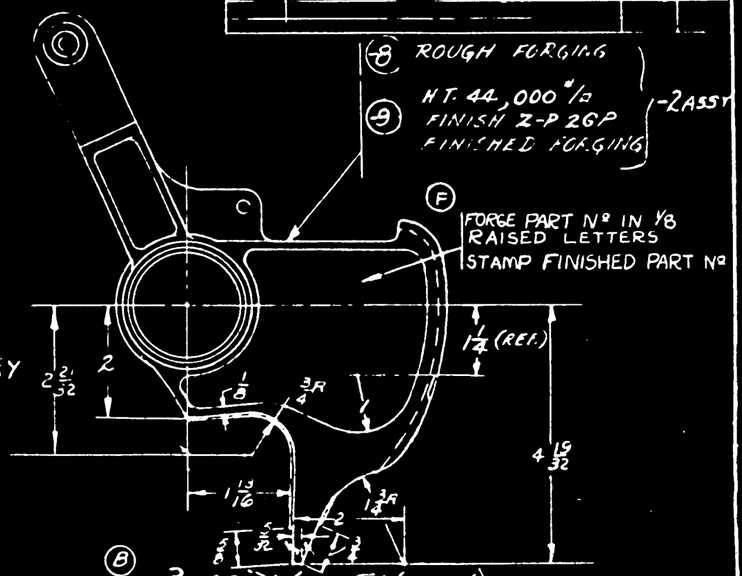

(B) -2 ASSY (AS SHOWN)
SCALE 6"=1-0"

NOTE:-2 ASSY IDENTICAL TO -7R(-0 ASSY) EXCEPT AS NOTED

NOTES:
ALL CORNERS 1/8 R
ALL WEB & THRU
ALL FILLET RADII 5/16
ALL DRAFT ANGLES 7°

(E)

FINISH CODE	
GP	GREEN PRIME
Z	ANODIC TREATMEN
P	P-27 PRIMER
AP	ALUMINIZED PRIMER
C	CADMIUM PLATE

-9 MAKE FROM -8

-8 FORGING AL. ALLOY (AEIST) 4647GR3

AN286-1
AN201-K4A
-7R MAKE FROM -6
-7L MAKE FROM -6

-6 FORGING AL. ALLOY (ASIST) 4647GR3

PART Nº	STOCK	MATERIAL	SPEC	LH REQ	RH REQ	LH REQ	RH REQ	LH REQ	RH REQ	LH REQ	RH REQ	LH REQ	RH REQ
PARTS LIST PER ASSY				-0		-2		-3		-4		-5	

A.C. NAVY NOTED HEAT TREAT | NOTED FINISH

9-2240 | DRAFT | CHECK | STRESS | MAT | APPROV | ENG

NAME LEVER ASSY-CONTROLS-BRAKE

OPP HAND 28C5701-R

DWG D | SIZE 28C5701

CONSOLIDATED AIRCRAFT CORP. SAN DIEGO CALIF

ENG. FILE

LET	ALTERATION	DATE	BY
A	ADDED [illegible] IN SEC. D-D & TO NOTE "REMOVE FROM ROUGH FORGING"	8-12-41	[illegible]
B	CHANGED MATERIAL FROM SP. ALLOY STEEL SPEC. N-511 & ST. UNDERCUT TO ALL ROUND FIRST, SPEC. 4140 CL 2, & AIR HARDEN 1R 32/64	9-11-41	[illegible]
C	CHANGED 28C5731 L&R TO 28C5731 L&R	9-12-41	[illegible]
D	REVISED PORTION OF LUG ON SIDE OF PEDAL [illegible] DIA. [illegible] DIA. [illegible] DIA. [illegible] DIA. (NOTES - DRILL) [illegible] (ONE) - DRILL [illegible] DIA. DEPTH [illegible] CTSINK [illegible] DEPTH [illegible] — ADDED SEC. D-D SHOWING SLOT [illegible] DIA. FOR SAND.	9-4-41	WITEK
E	ADDED [illegible] RAD. & [illegible] DIA. TO SLOT TO EXPEDITE MACHINING	9-29-41	WITEK
F	ON FACE OF BOSS - ADDED LUGS IN TRIM & NOTES "REMOVE FROM ROUGH FORGING" (2 PLACES)	1-31-42	[illegible]
G	ON FACE, ADDED NOTE "4, 28C5702 L/R IS INTERCHANGEABLE WITH 28C5587 L/R." NO WT. CHG.	4-28-42	[illegible]

SECTION B-B

SECTION D-D

SECTION C-C

REMOVE FROM ROUGH FORGING.

REMOVE THIS LUG FROM L.H PEDAL

DRILL 1/4 DIA THRU TO SLOT

REMOVE FROM ROUGH FORGING.

-6 ROUGH FORGING

JIG TO MATCH 28C5731 L&R.

REAM TO .375±.001

SERRATE AS SHOWN. ROUND CORNERS.

PARTING LINE

SECTION A-A

NOTES:
1. ALL FILLET RADII 3/16
2. ALL DRAFT ANGLES 7°
3. SMALL UNMARKED RADII 1/16.
4. 28C5702 L/R IS INTERCHANGEABLE WITH 28C5587 L/R.

NOTE:- -0 ASS'Y RUSH RELEASED 9-9-41

FINISH CODE	
CP	CROMAN [illegible]
Z	ANODIC TREATMENT
P	N.P. PRIMER
AP	ALUMINUM PRIMER
C	CHROMIUM PLATE

ASSY DASH NO.	MODEL	NEXT ASSY	REQ
-R	28-SAMN	28C5700	2
-L	28-SAMN	28C5701	2
-R	28C-AMC	28C5700	2
-L	28C-AMC	28C5701	2
-R	PBY-5A	28C5700	2
-L	PBY-5A	28C5701	2

REQUIREMENTS PER AIRPLANE

REPLACES — .73 CAL. WT.

REPLACED BY — A/C WT.

LIGHT ON DRAWING AND UNLESS OTHERWISE SPECIFIED ± 1/32 & 1° — SCALE 12"=1'-0

STAMP PART NUMBER WHERE SHOWN

PART NO	STOCK	MATERIAL	SPEC.	LH REQ	RH REQ	LH REQ	RH REQ	LH REQ	RH REQ	LH REQ	RH REQ	LH REQ	RH REQ
	FORGING	[illegible]	[illegible]	/	/								
PARTS LIST PER ASSY.				-0	-2	-3	-4	-5					

A.C. NAVY 44,000 PSI — HEAT TREAT — ZP-26D — FINISH — 9-440 — CHART — Cr — CHECK — STRESS — MAT — APPROV. — ENG.

NAME PEDAL-CONTROLS-BRAKE

CONSOLIDATED AIRCRAFT CORP. SAN DIEGO, CALIF.

CPP HAND 28C5702R

DWG SIZE D — 28C5702

LET	ALTERATION	DATE	BY
A	CHANGED DIM FROM [illegible] TO [illegible]	[illegible]	[illegible]
B	ADDED [illegible] R - SECT A-A	[illegible]	[illegible]
C	WAS 28C50BB	[illegible]	[illegible]
D	FROM B/M REMOVED "AL. ALLOY CASTING "46AI (L4" & "20000#"; ADDED "NOTED" TO FACE ADDED "MATERIALS NOTE." NO WT CHG.	8-20-43	HODIK

PBY-5A
PBY-5A

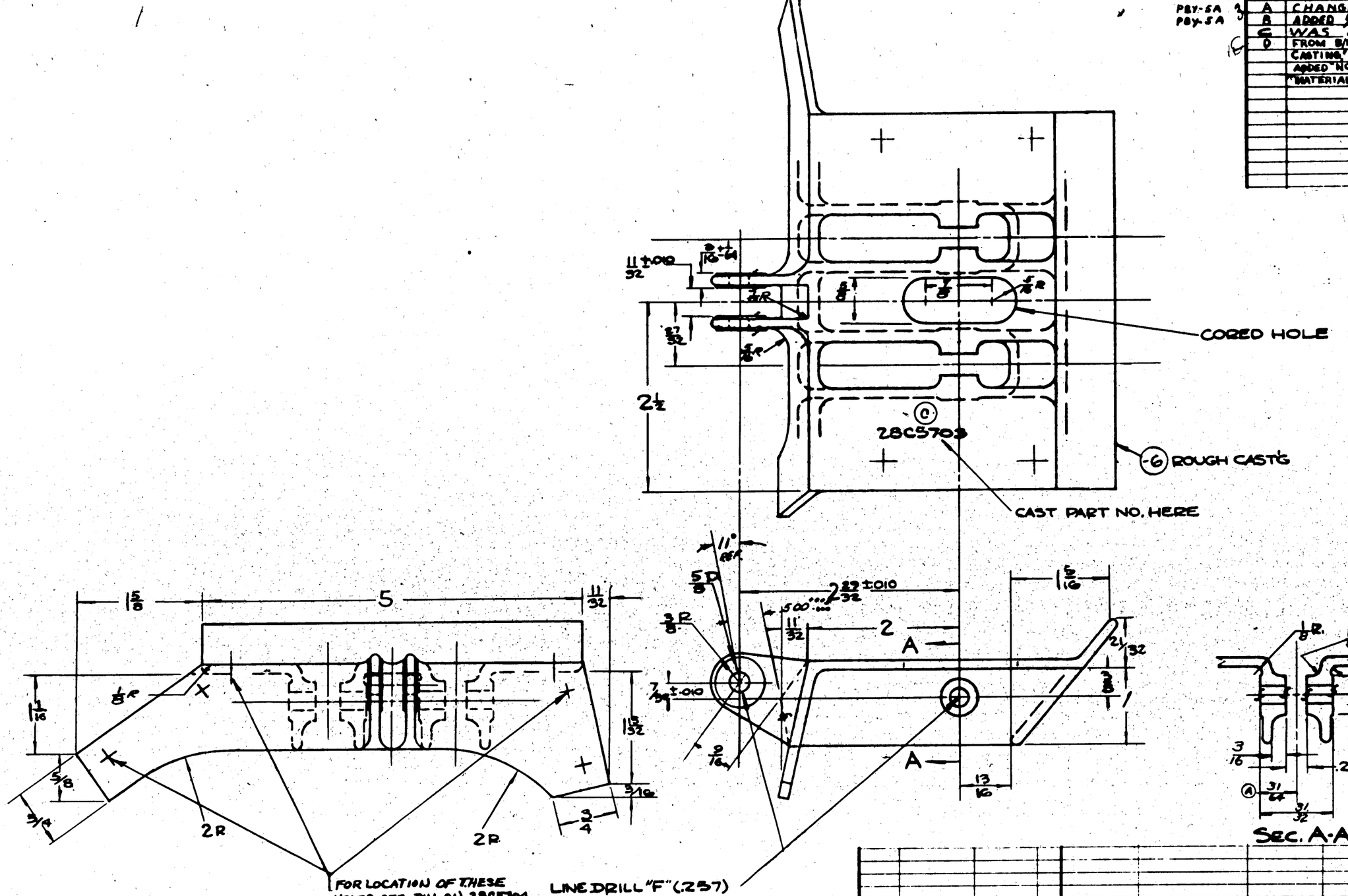

SEC. A-A

FINISH CODE	
Z	ANODIC TREATMENT
P	P-27 PRIMER
AP	ALUMINIZED PRIMER
C	CADMIUM PLATE

FOR LOCATION OF THESE HOLES SEE DIM. ON 28C5704. LINE DRILL "F" (.257)

Ⓓ MATERIAL NOTE:
-6 MAY BE MADE FROM:
1.- AL ALLOY CASTING 195T4, SPEC. AN-QQ-A-390 CL I,
T.S. 29,000 P.S.I., OR
2.- AL. ALLOY CASTING S195T6, SPEC. AN-A-5 CL. II,
T.S. 32,000 P.S.I.

NOTE:
ALL WEB 1/8 THRU
ALL FILLET RADII 5/16 EXCEPT AS NOTED

ASSY DASH NO.	MODEL	NEXT ASSY	REQ
	28-5AMN	28C5704	1
	OAU-1	28C5704	1
	285-AMC	28C5704	1
	PBY-5A	28C5704	1

REQUIREMENTS PER AIRPLANE

REPLACES — REPLACED BY — .55 lb Calc. Wt. — Act Wt.

SCALE 12" = 1'-0" — 1/32

STAMP PART NUMBER WHERE SHOWN

PARTS LIST PER ASSY.				LH REQ.	RH REQ.	LH REQ.	RH REQ.	LH REQ.	RH REQ.	LH REQ.	RH REQ.	LH REQ.	RH REQ.
PART No	STOCK	MATERIAL	SPEC.	-0	-2	-3	-4	-5					
	NOTED	NOTED	NOTED										

AC									
NAVY NOTED	E-P-2AP	7-28-43							
HEAT TREAT	FINISH	DRAFT	CHECK	STRUCT	MAT	APPROV	ENG		

OPP. HAND —

NAME SUPPORT - CONTROLS - BRAKE VALVE PULLEYS

CONSOLIDATED AIRCRAFT CORP. San Diego, Calif.

DWG. D SIZE 28C5703

28C5703

32695

LET	ALTERATION	DATE	BY
A	CONDA' WAS BOND'T'	2/1/44	CLARK

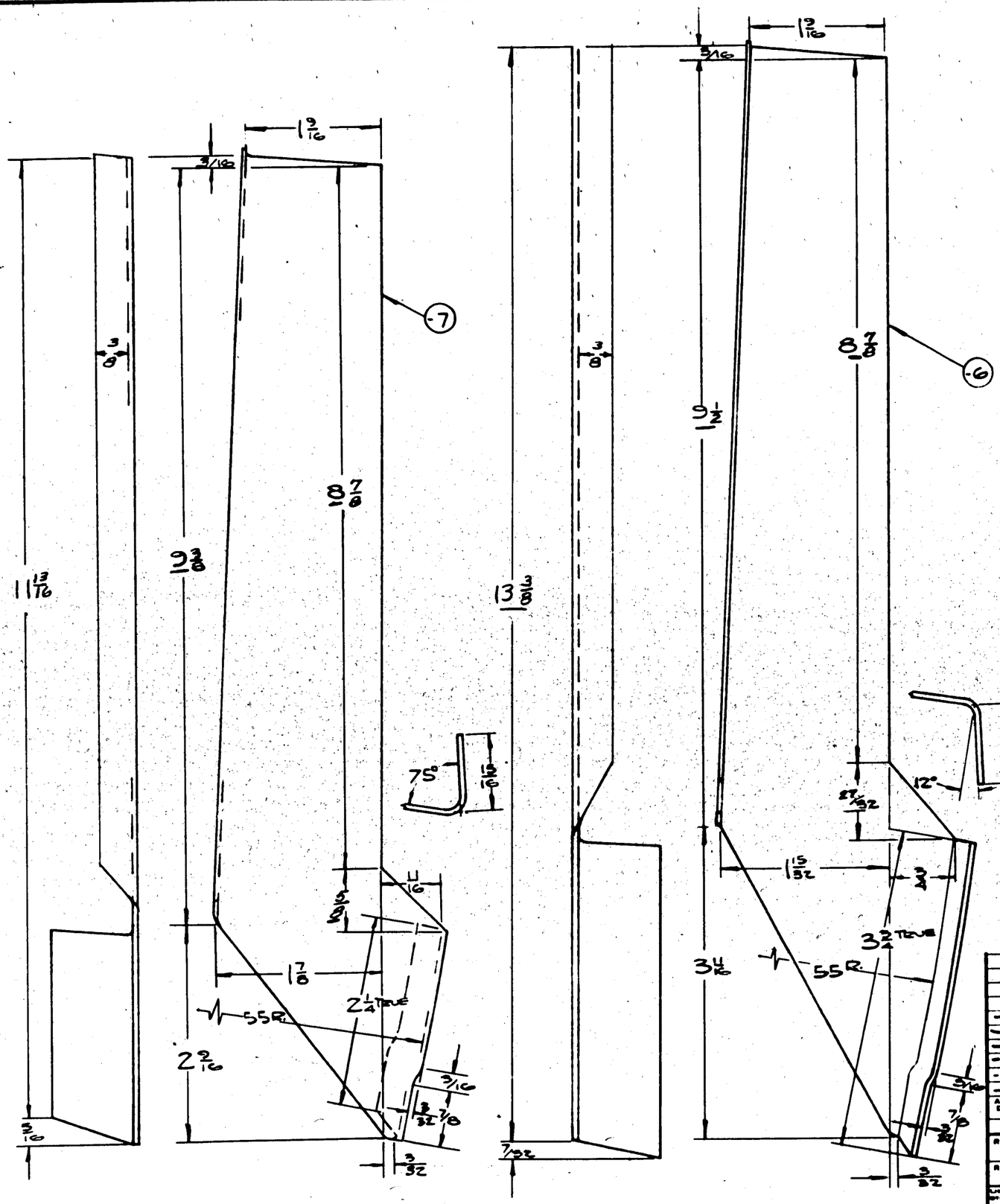

FINISH CODE	
Z	ANODIC TREATMENT
P	A-17 PRIMER
AP	ALUMINIZED PRIMER
C	CADMIUM PLATE

* P. GREEN PRIME

ASSY DASH NO.	MODEL	NEXT ASSY	REQ.
-7	OAU-1	28C570B	1
-6	OAU-1	28C570B	1
-7	2B54MC	28C570B	1
-6	2B54MC	28C570B	1
-7	PBY-5A	28C570B	1
-6	PBY-5A	28C570B	1

REQUIREMENTS PER AIRPLANE

REPLACES -7 X 1 5 -6 X 1 6 CALC WT.

REPLACED BY ACT WT

LIGHT OR SHOT HOLDING VARIOUS NOT INDICATED DIMENSIONS ± 1/32 1/2° SCALE 12" = 1'-0"

STAMP PART NUMBER WHERE SHOWN

PART No	STOCK	MATERIAL	SPEC.	LH REQ.	RH REQ.	LH REQ.	RH REQ.	LH REQ.	RH REQ.	LH REQ.	RH REQ.	LH REQ.	RH REQ.
PARTS LIST PER ASSY.				-0		-2		-3		-4		-5	
-7	.064 x 4 1/8 x 12 7/8	AL. ALLOY	47A10 - P	1									
-6	.064 x 4 1/2 x 14	AL. ALLOY	47A10 - P		1								

AC								
NAVY SQ-53	Z-P-Z-GP	1/1340				APPROVAL S.F.E.		
HEAT TREAT	FINISH	DRAFT	CHECK	STRUCT	MAT	APPROV	ENG	

NAME INTERCOSTALS - CONTROLS - BRAKE VALVE MOUNT

OPP. HAND —

CONSOLIDATED AIRCRAFT CORP. SAN DIEGO, CALIF.

DWG. D SIZE 28C5717

R

OA-10, PBY-5)
28-3AMC, PBY5A) E.O. 32695

LET	CHANGE OR ALTERATION	DATE	BY
A	4.7AL0 COND A WAS T	5-13-41	NICKS
	HEAT TREAT SR-53 WAS NONE		

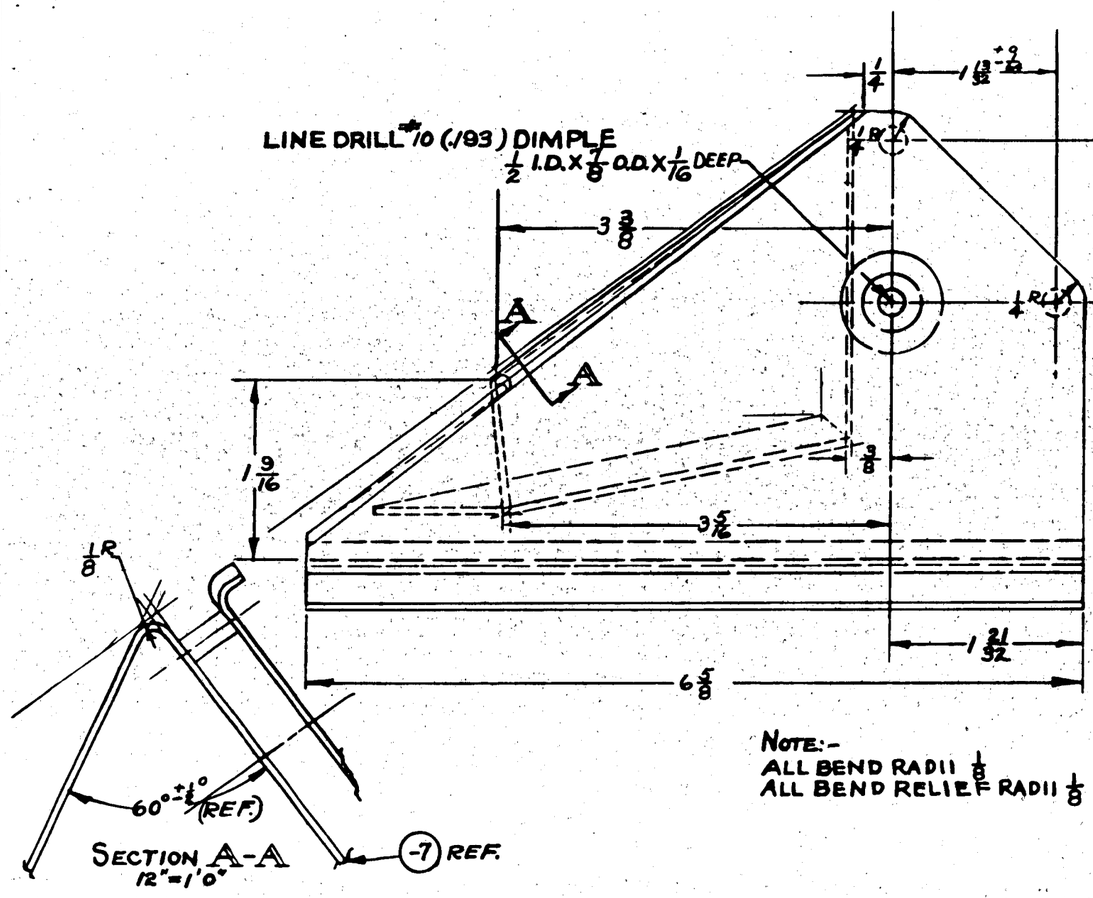

NOTE:-
ALL BEND RADII 1/8
ALL BEND RELIEF RADII 1/8

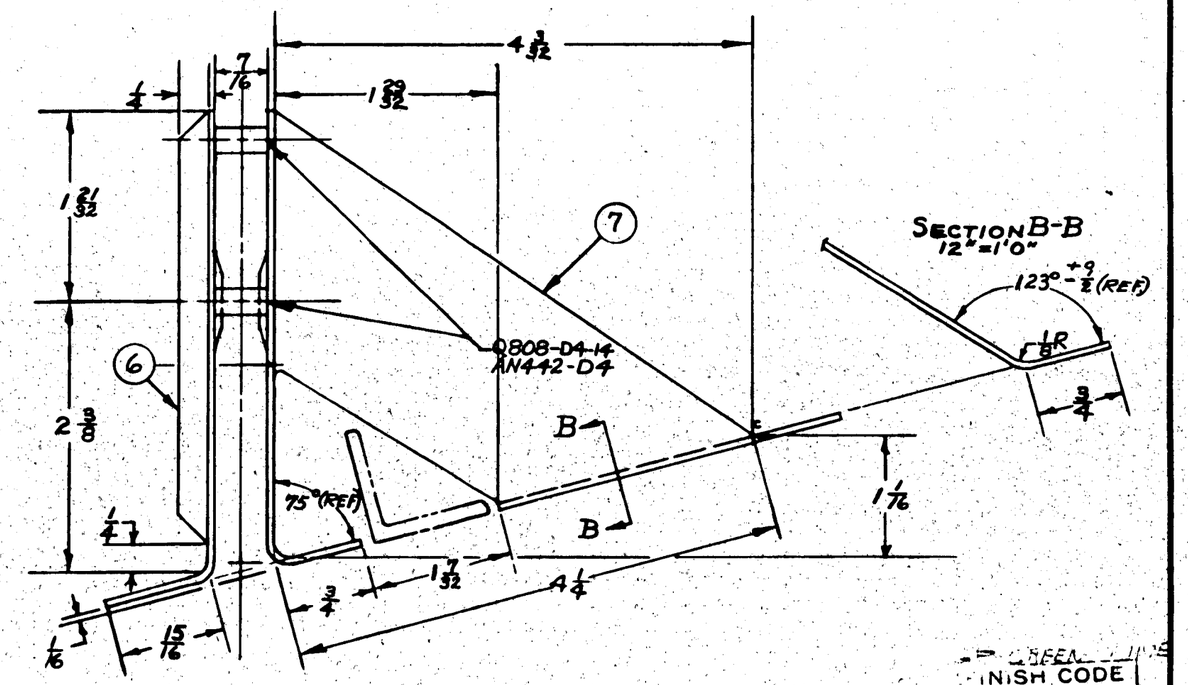

FINISH CODE

Z	ANODIC TREATMENT
P	P-27 PRIMER
AP	ALUMINIZED PRIMER
C	CADMIUM PLATE

ASSY. DASH NO.	MODEL	NEXT ASSY.	REQ'D
	OAU-1	28C5708	1
	28S-AMC	28C5708	1
	PBY-5A	28C5708	1

REQUIREMENTS PER AIRPLANE

REPLACES — CALC WT. .24#
REPLACED BY — ASY. WT.
LIMIT ON DIMENSIONS UNLESS OTHERWISE SPECIFIED ± 1/32
SCALE 12" = 1'0"
STAMP PART NUMBER WHERE SHOWN

PART NO.	STOCK	MATERIAL	SPEC.	LH REQ. -0	RH REQ. -0	LH REQ. -2	RH REQ. -2	LH REQ. -3	RH REQ. -3	LH REQ. -4	RH REQ. -4	LH REQ. -5	RH REQ. -5
PARTS LIST PER ASSY.													
AN442-D4								2					
Q808-D4-14								2					
(A) -7	.064 x 4 3/32 x 11 3/16	AL ALLOY SHEET	4.7AL0 COND A	1									
-6	.064 x 5 1/16 x 6 3/16	AL ALLOY SHEET	4.7AL0 COND A	1									

AC		J.H. HAMSON					
NAVY SR-53	Z-P-2 GP	11-7-40		Norman Reed J.F.R.			
HEAT TREAT	FINISH	DRAFT	CHECK	STRUCT.	MAT	APPROV.	ENG.

NAME BRACKET ASSEMBLY-CONTROLS-STARB'D INNER.-BRAKE VALVE.
CONSOLIDATED AIRCRAFT CORP. SAN DIEGO, CALIF.
OPP. HAND
DWG. SIZE D
28C5720

R

LET	ALTERATION	DATE	BY
A-1	CHANGED MAT'L & SPEC. ON -6 & -7		
	ADDED HEAT TREAT SPEC. ALL ON A/N	FEB-41	

29-GAGE .09-10, DBF 61A-E O. SEALED

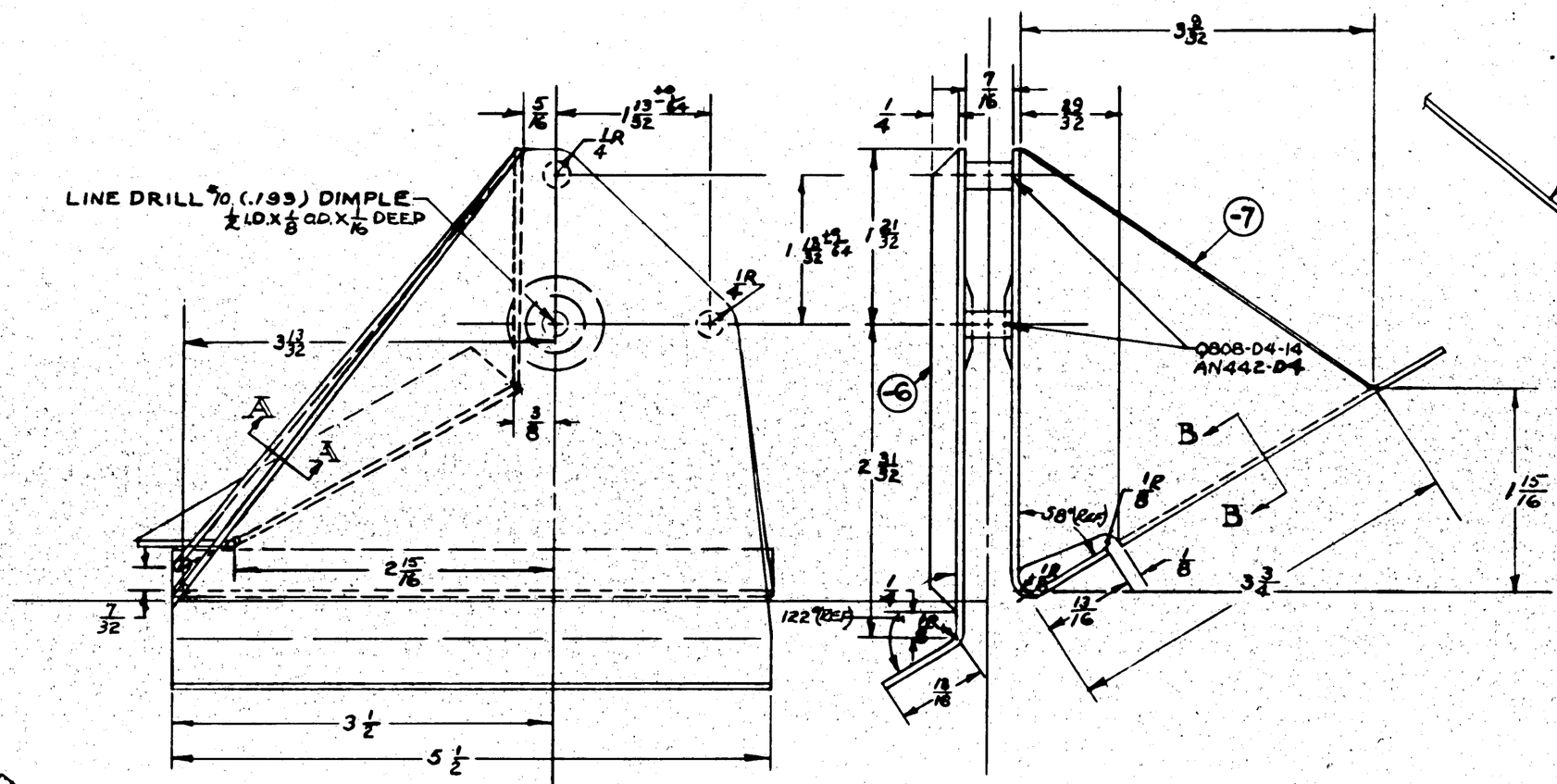

SECTION B-B
12" = 1'-0"

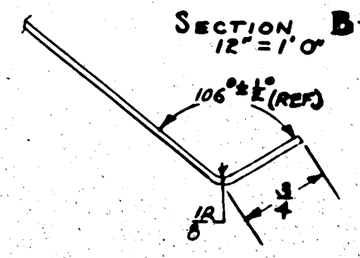

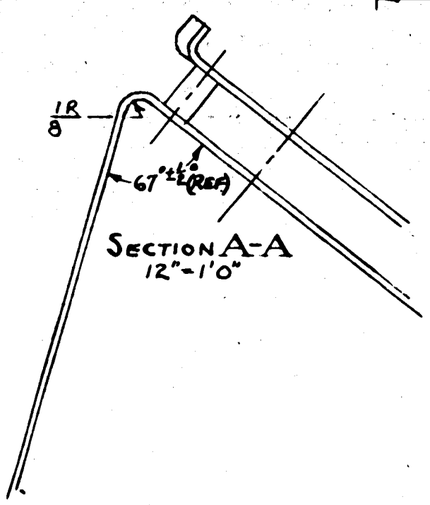

SECTION A-A
12"-1'-0"

NOTE:-
ALL BEND RADII 1/8
ALL BEND RELIEF RADII 1/8

GP-GREEN PRIME

FINISH CODE

Z	ANODIC TREATMENT
P	P-27 PRIMER
AP	ALUMINIZED PRIMER
C	CADMIUM PLATE

ASSY. DASH No.	MODEL	NEXT ASSY	QUAN.
	QAU-1	28C5708	1
	28S-ANC	28C5708	1
	PBY-5A	28C5708	1

REQUIREMENTS PER AIRPLANE

REPLACES — .20 # CALC WT.

REPLACED BY — ACT WT.

LIGHT OR SHOWING UNLESS OTHERWISE SPECIFIED ± 1/32 IF NOTED — SCALE 12" = 1'0"

STAMP PART NUMBER WHERE SHOWN

PART No.	STOCK	MATERIAL	SPEC.	-0 LH	-0 RH	-2 LH	-2 RH	-3 LH	-3 RH	-4 LH	-4 RH	-5 LH	-5 RH
			AN442-D4										
			Q808-D4-14										
(A) -7	.064 x 5 5/16 x 10 15/16	ALCLAD 24S0	COND A, TYPE I										
-6	.064 x 5 5/16 x 5 7/8	ALCLAD 24S0	COND A, TYPE I										
	PARTS LIST PER ASSY.			REQ. -0		REQ. -2		REQ. -3		REQ. -4		REQ. -5	

AC SR-53		J.H. Jackson	A	C	S		
NAVY	Z-P-Z GP	4-8-40			J.S.P.		
HEAT TREAT	FINISH	DRAFT	CHECK	STRUCT.	MAT	APPROV	ENG.

NAME BRACKET ASSEMBLY-CONTROLS PORT OUTBOARD-BRAKE VALVE

CONSOLIDATED AIRCRAFT CORP. SAN DIEGO, CALIF.

OPP. HAND

SIZE D — 28C5721

R

LET	ALTERATION	DATE	BY
A	CHANGED TIP OF -8 FROM 9/32 TO 3/16 & MATERIAL TO COLD ROLLED STEEL- CASE HARDEN		
B	ADDED DIM. 15/16		
C	CHANGED -7 FROM Q-7010-DO-.091 TO Q7024-DO-.091 CHANGED Q820D-0-9 TO Q7024-DO-.125 CHANGED AN442-D3 TO AN442-D5 RIVETS TO AN425-D3		
D	CHANGED DIMS. 5/8 & 1/4 WAS 11/32		
E	ON DWG & B/M AN526 D632-11 WAS AN442 D4		
F	NOTE: LINE DRILL #10 (.193) DIMPLE 1/2 I.D. x 7/8 O.D. x 1/16 DEEP" WAS LINE DRILL "F" (.257)		
G	-8 "COLD ROLLED STEEL" SAE 1025 WAS "COLD R'LLD CS HD CM SAE 1025"		
H	-8 M'TL (5/16 x 1 1/2 x 1 3/8) WAS (5/16 x 1 1/2 x 1 1/2) WT CHG. NEG.		
J	-7(1) .091 x 1 5/8 x 1 5/8 ALCLAD QQ-A-362-T WAS -7(1) Q7024-DO-.091 -11(1) .125 x 1 5/8 x 1 5/8 ALCLAD QQ-A-362-T WAS Q7024-DO-.125 (1) NO WT. CHG.		
K	ADDED AC365D632 (1 REQ.). RELOCATED AN526D632-11, Q808D4-14 & AN442D4, WT. CHG. NEG.		

BORE .7762 +.001 -.000
FAFNIR K3 BEAR'G (OR EQUIV.)
RING STAKE.

3/4 R.

9/16 R

(C) AN425-D3

AN425-D3 (C) FLUSH BOTH HEADS

(K) AN526D632-11
AC365D632
Q808D4-14

5 3/4

(K) AN442D4
Q808D4-14

(E)

(F) LINE DRILL #10 (.193) DIMPLE 1/2 I.D. x 7/8 O.D. x 1/16 DEEP

SEE DETAIL-8

AN442-D5

AN425-D3 (C) FLUSH BOTH HEADS

3/4 R.

9/32

-11

(C)

(J)

15/16

(B)

1/2

7/16

-6R

-6L

1 1/4

5/16

-7

7/32

BORE .7488 +.001 -.000
AN201-K4A BEAR'G
RING STAKE.

DETAIL-8 ~ FINISH "C"

FINISH CODE	
Z	ANODIC TREATMENT
P	P
AP	ALUM... ER
C	CADM...

ASSY DASH NO	MODEL	NEXT ASSY	REQ
	28SAMN	28C5704	2
	28SANC	28C5704	2
	PBY-5A	28C5704	2

REQUIREMENTS PER AIRPLANE

REPLACES .18 CALC WT.

REPLACED BY: ACT WT.

SCALE: 1/32 — 12" = 1'-0"

STAMP PART NUMBER WHERE SHOWN

AC365D632
FAFNIR-K3 BEAR'G
AN442-D5
AN442-D4
AN425-D3
AN526D632-11
AN201-K4A
Q808D4-14

PART NO	STOCK	MATERIAL	SPEC	LH RH REQ	LH RH REQ	LH RH REQ	LH RH REQ	LH RH REQ
				.0	-2	-3	-4	-5
-11	1.25 x 1 5/8 x 1 5/8	ALCLAD	QQ-A 362-T	1				
-8	5/16 x 1 1/2 x 1 3/8	COLD ROLLED STEEL	SAE 1025	1				
-7	.091 x 1 5/8 x 1 5/8	ALCLAD	QQ-A-362-T	1				
-6R	.064 x 3 3/8 x 7 1/2	AL. ALLOY	47A8 T	1				
-6L	.064 x 3 3/8 x 7 1/2	AL. ALLOY	47A8 T	1				

PARTS LIST PER ASSY

AC

NAVY — HEAT TREAT

Z-P-2AP FINISH

7-23-40 AP GREEN DWN H.P.L. JWH 10/2/40 12/4/40

NAME LEVER ASSY. - CONTROLS - BRAKE VALVE

OPP HAND —

DWG D SIZE 28C5725

CONSOLIDATED AIRCRAFT CORP. SAN DIEGO, CALIF.

R 28C5725

LET	ALTERATION	DATE	BY
A	CHANGED MATERIAL TO CONA A WAS CONA T	4-9-40	

OA-10, 28-5 ANC & PBY-5A

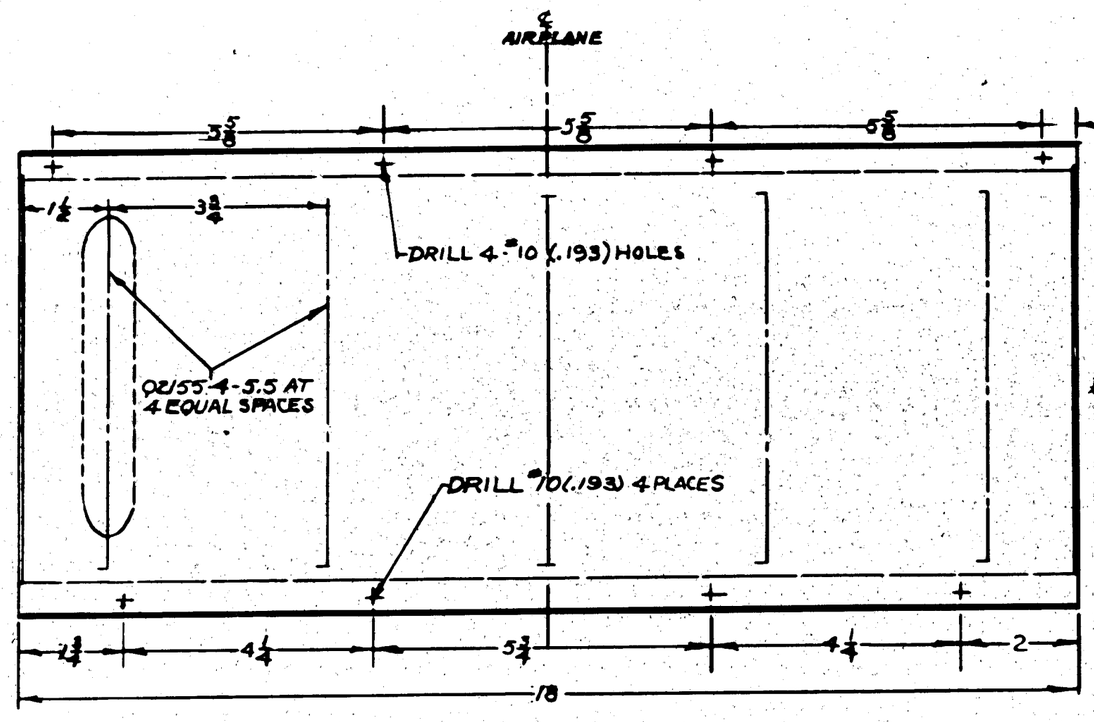

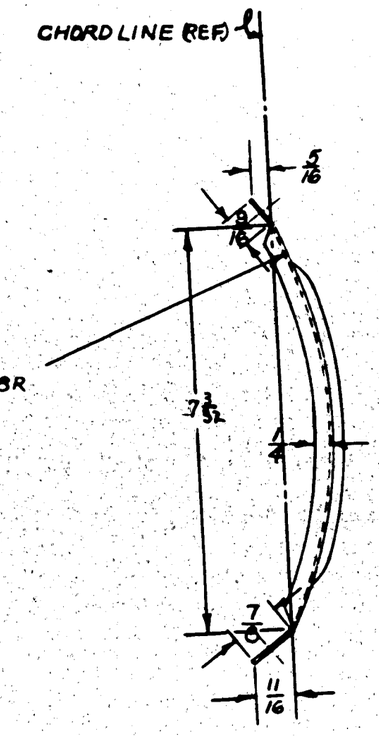

FINISH CODE	
Z	ANODIC TREATMENT
P	P-27 PRIMER
AP	ALUMINIZED PRIMER
C	CADMIUM PLATE

ASSY. DASH No.	MODEL	NEXT ASSY	REQ
	OA-10	28B5528	1
	28S-ANC	28B5528	1
	PBY-5A	28B5528	1

REQUIREMENTS PER AIRPLANE

REPLACES — CALC WT.

REPLACED BY — ACT. WT.

LIMIT ON DECIMALS UNLESS OTHERWISE SPECIFIED: ± 1/2 — SCALE 6"=1'0"

STAMP PART NUMBER WHERE SHOWN

PART No.	STOCK	MATERIAL	SPEC.		LH REQ.	RH REQ.	LH REQ.	RH REQ.	LH REQ.	RH REQ.	LH REQ.	RH REQ.	LH REQ.	RH REQ.
	.051 x 13 3/4 x 22 3/4 AL. ALLOY SHT		41A10 CONA	1	-0		-2		-3		-4		-5	

PARTS LIST PER ASSY.

AC		J.H. HANSEN	
NAVY SR-53	Z-P-ZAP	11-22-40	
HEAT TREAT	FINISH	DRAFT	CHECK / STRUCT / MAT / APPROV. / ENG

NAME GUARD-CONTROLS-AMPHIB. BRAKE CABLES

CONSOLIDATED AIRCRAFT CORP. SAN DIEGO, CALIF.

OPP. HAND

SIZE D — 28C5730

R

LET	ALTERATION	DATE	BY
A	MOVED NOTE "REMOVE THIS BOSS, ETC." TO RIGHT SIDE	9-2-41	DRAW
B	REVERSED SHOULDER OF ALL BUSHINGS AND CHANGED DIM. AS FOLLOWS — .295 (WAS .309) .054 (WAS .052) .023 (WAS .021)	9-9-41	WITTER
C	1/8 R. WAS 1/16 R. FINISH: Z-P-2 (C) WAS Z-P-2 TP. NO WK CHG.	8-29-42	CABIN

E.O. - A12333

CHANGE "B" FLUSH REL. → T. BANDER 9-9-41

AN201-K4A BEARING PRESS FIT .7483 +.001 -.000 BORE. RING STAKE

3 1/8

9 R. / 16

B 32

3 R. / 8

1.4375 R.

1 R.

A

A

2 5/8 TYP.

2 1/16

4 7/16

1 1/16

9 / 32

13 / 32

1 / 16

1 / 8

1.781 R.

2 1/2

2.18 ±.005

.854

2.295 +.000 -.008

3 R. / 16

REMOVE THIS BOSS (A) ON L.H. PEDAL AS SHOWN

1 1/16 D.

.823 +.005 -.010

.500

(6) ROUGH FORGING

(7) FINISHED FORGING H.T. 65,000 #/□" (B) ©

(7K) FINISH Z-P-2 (C)

0700-12-16 BUSHING PRESS FIT .9000 +.000 -.001 BORE

REAM .7580 +.000 -.003 COUNTERBORE .515 +.016 -.000 X 1/16 +.032 -.000 DEEP 3 PLC'S. PRESS IN 0700-8-7

1 1/8

CHAMFER 1/32 X 45°

SECTION A-A

SCALE: 24" 1'-0"

NOTES:

ALL FILLET RADII 3/16

ALL DRAFT ANGLES 7°

GP	GREEN EPOXY PRIMER
FINISH CODE	
Z	ANODIC TREATMENT
PX	P-77 PRIMER
AP	ALUMINIZED PRIMER
C	CADMIUM PLATE

-R	7A-SAMN	28C57091R	2	
-L	7A-SAMN	28C57091L	2	
-2	0A-10	28C57031R	2	AN201-K4A
-4	0A-10	28C57031L	2	
-3	28S-AMC	28C57051R	2	
-5	28S-AMC	28C57051L	2	0700-12-16
-1	28Y-SA	28C57031R	2	0700-8-7
-1	28Y-SA	28C57031L	2	-7K MAKE FROM -6
ASSY DASH NO.	MODEL	NEXT ASSY	REQ	-7L MAKE FROM -6

REQUIREMENTS PER AIRPLANE

REPLACES — AASP CALC WT.

REPLACED BY — ACT WT

SCALE 12" 1'-0"

STAMP PART NUMBER WHERE SHOWN

-6 FORGING · AL. ALL. ASS'Y · M-277

PART NO	STOCK	MATERIAL	SPEC.	LH REQ.	RH REQ.	LH REQ.	RH REQ.	LH REQ.	RH REQ.	LH REQ.	RH REQ.
PARTS LIST PER ASSY.				-0	-2	-3		-4		-5	

A C		For
NAVY NOTED	NOTED	9-5-40
HEAT TREAT	FINISH	JOINT CHECK STRUCT MAT SYMBOL ENG.

NAME · MAST ASS'Y - CONTROLS - BRAKE PEDAL ADJUSTMENT

CONSOLIDATED AIRCRAFT CORP. SAN DIEGO, CALIF.

OPP. HAND 28C5731R

DWG D SIZE 28C5731

END FILE

LET	ALTERATION	DATE	BY
E.O. A13265 21-16	A	DIM. 2 3/32 WAS 2 1/32 & 2 3/32 WAS 2 1/32	8-20-41
	B	MATL. FOR -6 & -7 : CONDN A WAS COND T. NO WT. CHG.	3-16-42
E.O. A14328	C	DIM 2 1/16 WAS 2 3/32, 2 1/32 & 2 3/32 WAS 2 1/32 (WT CHG)	4-14-43

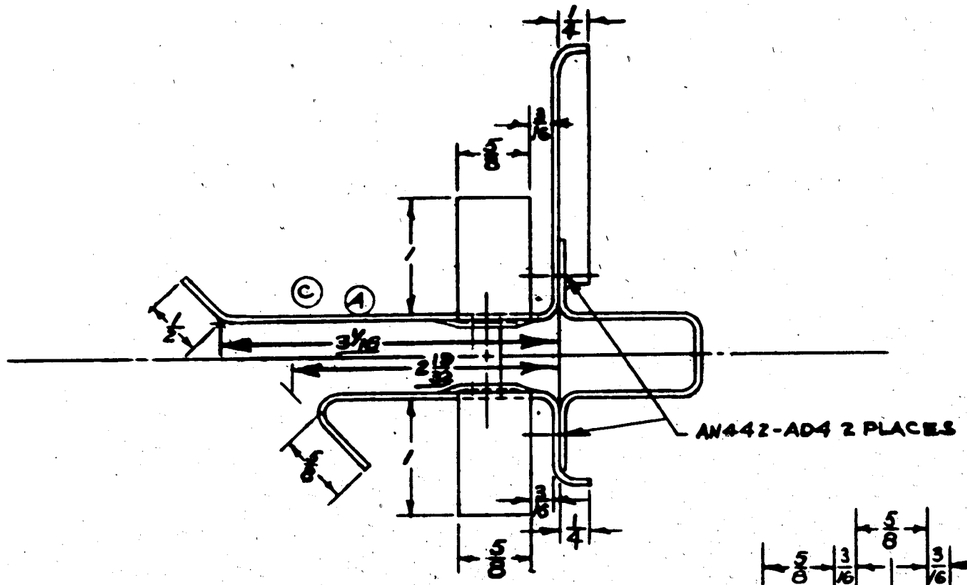

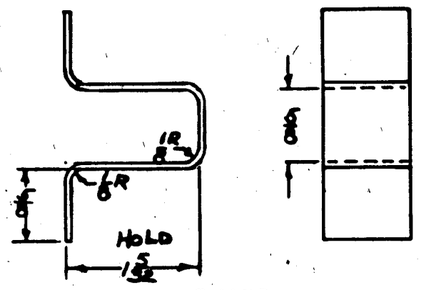

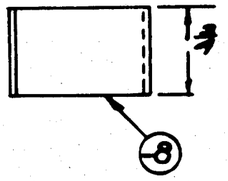

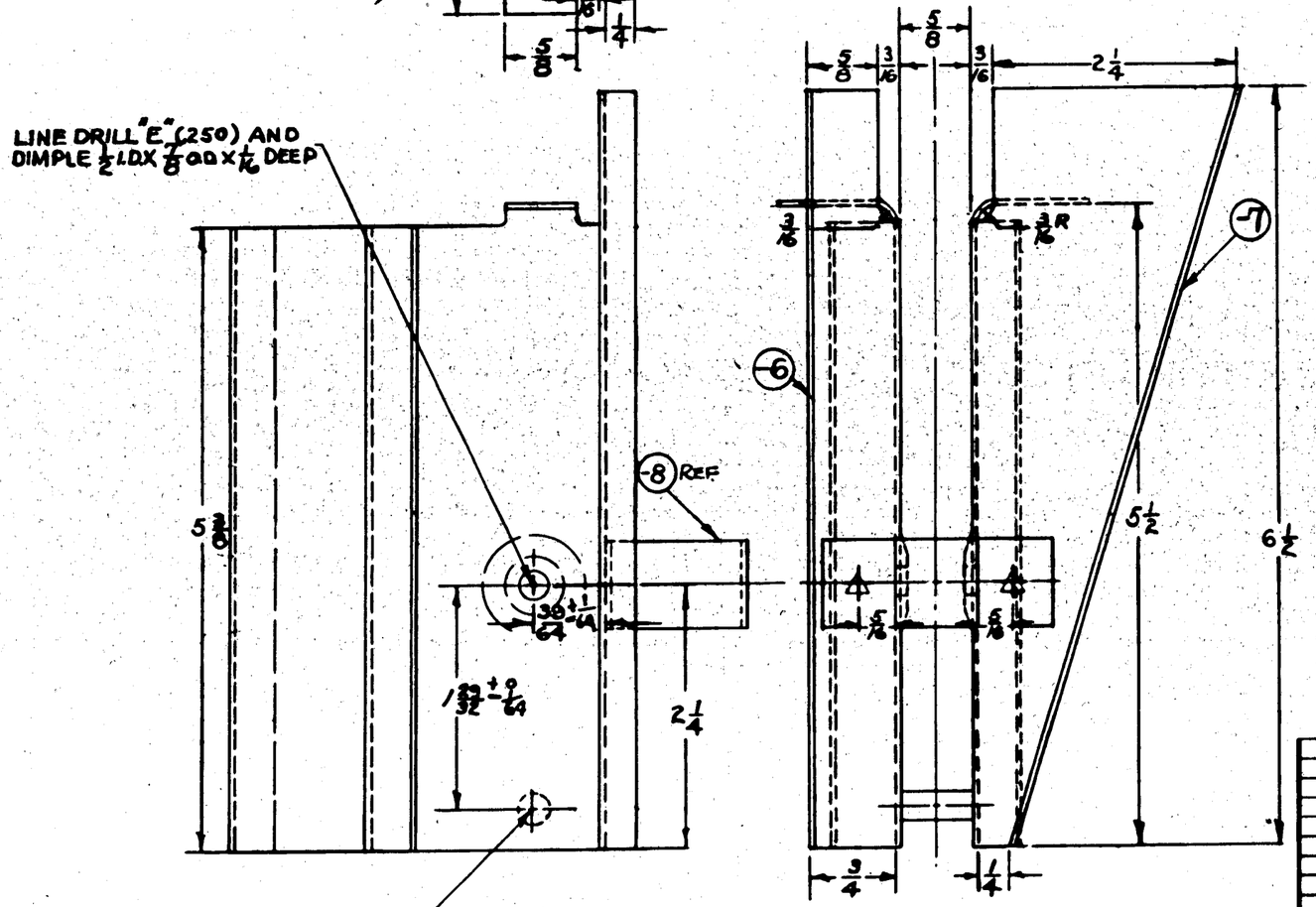

NOTE:-
ALL BEND RADII 1/8 EXCEPT AS NOTED
ALL RIVETS AN442-AD4

FINISH CODE	
Z	ANODIC TREATMENT
P	P-7 PRIMER
AP	ALUMINIZED PRIMER
C	CADMIUM PLATE

AN442-AD4
0808-D4-20

ASSY DASH NO.	MODEL	NEXT ASSY	REQ
-R	PBY-5A	28C5733-51	1
-L	PBY-5A	28C5733-61	1

REQUIREMENTS PER AIRPLANE

REPLACES .26 CALC WT.

REPLACED BY ACT. WT.

SCALE

STAMP PART NUMBER WHERE SHOWN

PART NO.	STOCK	MATERIAL	SPEC.	LH REQ. -0	RH REQ. -2	LH REQ. -3	RH REQ. -4	LH REQ. -5	RH REQ. -6
-8	.051 X 7/8 X 4 5/8	AL ALLOY	17ST COND T	1					
-7	.051 X 6 1/2 X 7	AL ALLOY	17ST COND T		1				
-4	.051 X 6 1/2 X 7	AL ALLOY	17ST COND T			1			
-3	.051 X 4 3/4 X 7	AL ALLOY	17ST COND A				1		
-5	.051 X 4 3/4 X 7	AL ALLOY	17ST COND T					1	

PARTS LIST PER ASSY.

AC		J.W. HAWKINS	S	GREEN	MONK	G.G.
NAVY 3R-53	Z-P-AP		P		K.M. J.F.R.	Z
HEAT TREAT	FINISH	DRAFT	CHECK	STRUCT.	MAT.	APPROV.	ENG

NAME BRACKET ASSY - CONTROLS - AILERON SERVO PULLEY - LOWER

CONSOLIDATED AIRCRAFT CORP. SAN DIEGO, CALIF.

OPP. HAND 28C5733-R

DWG. D. 28C5733

DASH R

PBY-5A, OA-10
28-5 AMC
E.O. 39406 PBY-5A, OA-10
28-5 AMC
OA-10, 28S AMC
PBY-5A
PBY-5A, OA-10
28-3 AMC
E.O. A19563 8
E.O. A54531

LET	ALTERATION	DATE	B.
A	- 6 LER MAT'L. SPEC. SO WAS ST.		
	RIVET ON 1¼ FLANGE REMOVED.	2-24-41	BARTSCH
B	- 7 L & R. WAS ⅞ WIDE FULL LENGTH	4-10-41	Schaber
C	- 7 CHGD TO - 7 L & R. ON DWG	5-5-41	BLAT
	E.O. M		
D	FLANGE REVERSED HOLE ADDED. 9½ DIM WAS 9 5/16. 7¼ DIM WAS 6 5/8		
	11 3/16 DIM. WAS 11.	8-9-41	FOSTER
E	REM'V'D. SECTION OF FLANGE WT CHG NEG	8-6-42	MARSH

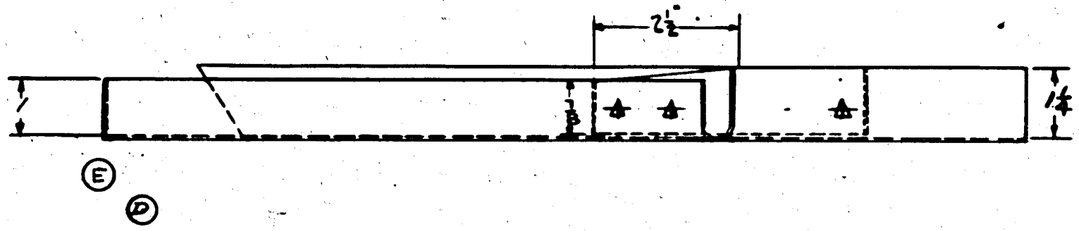

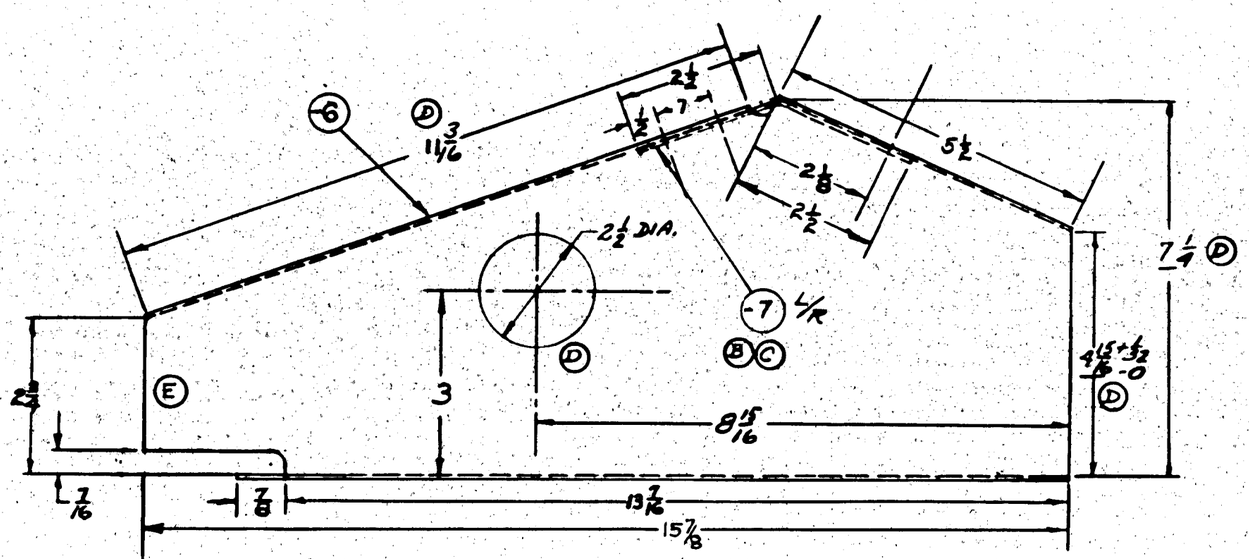

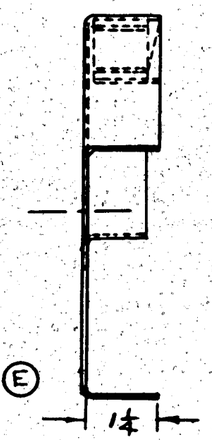

NOTE:-
ALL BEND RADII ⅛
ALL BEND RELIEF ¼ R
ALL RIVETS AN442-D4

-R	28-5AMN	28C5747	1
-L	28-5AMN	28C5747	1
-R	28S-AMC	-2	1
-L	28S-AMC	-0	1
-R	PBY-5A	-2	1
-L	PBY-5A	28C5747-0	1

ASSY. DASH NO.	MODEL	NEXT ASSY	REQ.

REQUIREMENTS PER AIRPLANE
REPLACES — .62 CALC WT.
REPLACED BY — ACT WT.
SCALE 6"=1'0"
STAMP PART NUMBER WHERE SHOWN

AN442-D4

PART NO	STOCK	MATERIAL	SPEC.	LH REQ. -0	RH REQ. -2	LH REQ. -3	RH REQ. -4	LH REQ. -5	RH REQ.
-7R	.064 R 1 x 5⅛	AL. ALLOY 24ST	4TA10-CONDT		1				
-7L	.064 x 1 x 5⅛	AL. ALLOY 24ST	4TA10-CONDT	1					
-6R	.064 x 10 x 19	AL. ALLOY 2430	4TA10-COND A	-	1				
-6L	.064 x 10 x 19	AL. ALLOY 2430	4TA10-COND A	1	-				

PARTS LIST PER ASSY.

+ = RIVETS (SIZE INDICATED AT INTERVALS BY THE FOLLOWING MARKINGS)
+ = 1/8 ✦ = 5/32 ✳ = 3/16
⊕ = 1/4 ⊞ = 5/16 ✱ = 3/8

FINISH COL

Z	ANODIC TREATMENT
P	P-27 PRIMER
AP	ALUMINIZED PRIMER
C	CADMIUM PLATE

AC —— | —— | J.H. Hanson | P | | | | | |
NAVY SR 53 | Z-P-ZAP | 11/25/41 | F.B. Ems | Q | | | | | F&F
HEAT TREAT | FINISH | DRAFT | CHECK | STRUCT. | MAT | APPROV | ENG.

NAME BULKHEAD-CONTROLS-PULLEY SUPPORT AT WHEELWELL CORNER-UPPER
OPP. HAND 28C5744 R.
CONSOLIDATED AIRCRAFT CORP. SAN DIEGO, CALIF.
DWG. SIZE D
28C5744

LET	ALTERATION	DATE	BY
A	-6 LER MATL. SPEC. 50 WAS ST.	2-24-41	[illegible]
B	6½ DIM WAS 6 1/16, 9 15/16 DIM WAS 9 31/32, 7¼ DIM WAS 6 9/16 FLANGE REVISED	3-9-41	[illegible]
C	TRIMMED FLANGE WT. CHG. NEG.	8-6-[illegible]	[illegible]
D	IN B/M FOR. -8 REPLACED "K18689 X 4 3/4, AL ALLOY EXTR 24ST SPEC. 4689 COND T." WITH "Y-6-A37T X 5 3/4" WT. CHG. NEG.	4-28-[illegible]	[illegible]

NAVY-EA
28-SAMC
OA-10

OPNAV P89S-A
28-SAMC
E.O. A54538

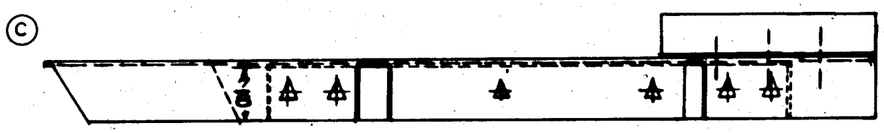

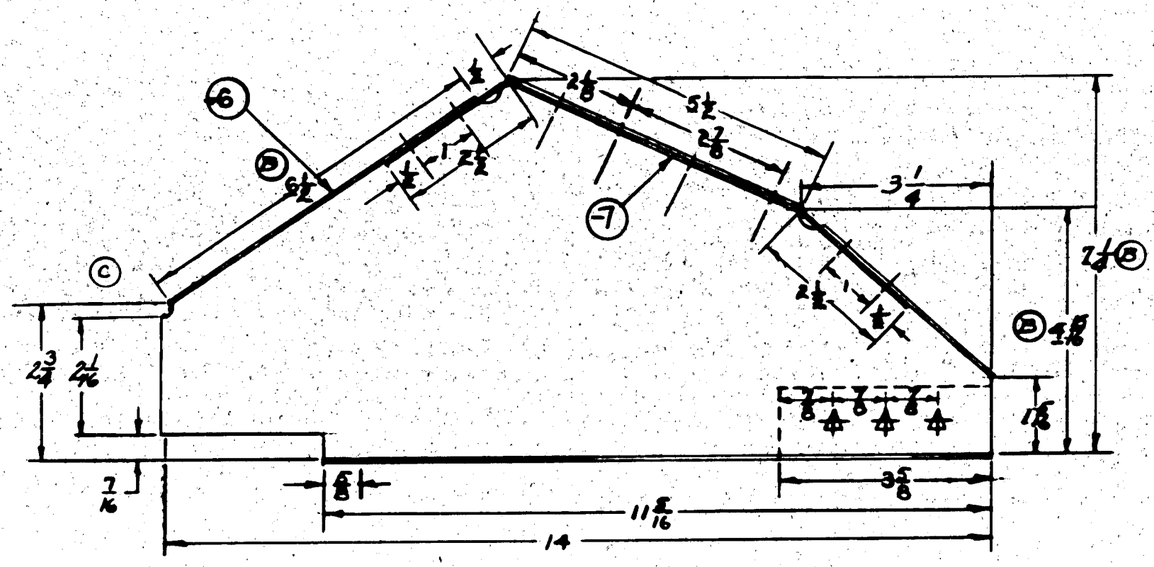

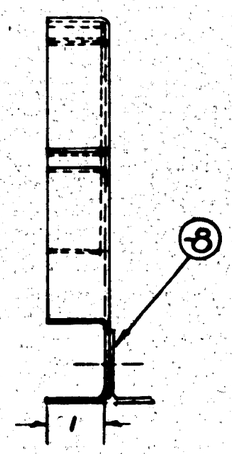

NOTE:-
ALL BEND RADII 1/8
ALL BEND RELIEF 1/8 R
ALL RIVETS AN442-D4

FINISH CODE	
Z	ANODIC TREATMENT
P	P-27 PRIMER
AP	ALUMINIZED PRIMER
C	CADMIUM PLATE

ASSY DASH NO.	MODEL	NEXT ASSY.	QTY.
-R	28-SAMN	28C57472	1
-L	28-SAMN	28C57470	1
-R	28S-AMC	28C57472	1
-L	28S-AMC	28C57470	1
-R	PBY-5A	28C57472	1
-L	PBY-5A	28C57470	1

REQUIREMENTS PER AIRPLANE

REPLACES — CALC. WT. .85

REPLACED BY — ACT. WT.

LIMIT OF DIMENSIONS UNLESS OTHERWISE SPECIFIED ± 1/32 — SCALE 6" = 1'0"

STAMP PART NUMBER WHERE SHOWN

AN442-D4

PART NO	STOCK	MATERIAL	SPEC.	LH REQ.	RH REQ.	LH REQ.	RH REQ.	LH REQ.	RH REQ.	LH REQ.	RH REQ.
PARTS LIST PER ASSY.				-0	-2	-3	-4	-5			
-8	Y-6-A37T x 3 3/4			1	1						
-7	.064 x 1 x 8 1/8	AL ALLOY 24ST 47 AND CONDT		1	1						
-6R	.064 x 10 x 17	AL ALLOY 24S-47 AND CONDA		1							
-6L	.064 x 10 x 17	AL ALLOY 24S-47 AND CONDA		1							

A C		J.H. Hansen	2-24-41				
NAVY SR 53	Z-P-2AP	[illegible]	[illegible]	[illegible]	[illegible]	[illegible]	[illegible]
HEAT TREAT	FINISH	DRAFT	CHECK	STRUCT	MAT	APPROV	ENG.

NAME BULKHEAD-CONTROLS-PULLEY SUPPORT AT WHEEL WELL CORNER-LOWER

OPP. HAND 28C5745-R

CONSOLIDATED AIRCRAFT CORP. SAN DIEGO, CALIF.

DWG. SIZE D — 28C5745

LET	ALTERATION	DATE	BY
A	CHG'D MAT. FROM 24ST TO 2430. ADDED H TEMPER	4/27/41	[illegible]
B	5 3/16 WAS 4 3/4, 5 5/16 ± 1/64 WAS 5 ± 1/64 (INT. CHG NEG)	7-6-42	[illegible]
C	DIM 6 15/32 WAS 6 1/4 INT. CHG NEG	8-6-42	[illegible]

PDV-5
BA-10
EB-BWC
6.0-9A22915
E.O. A49788

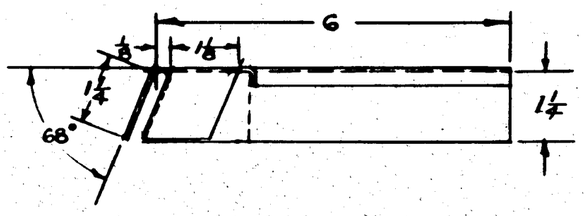

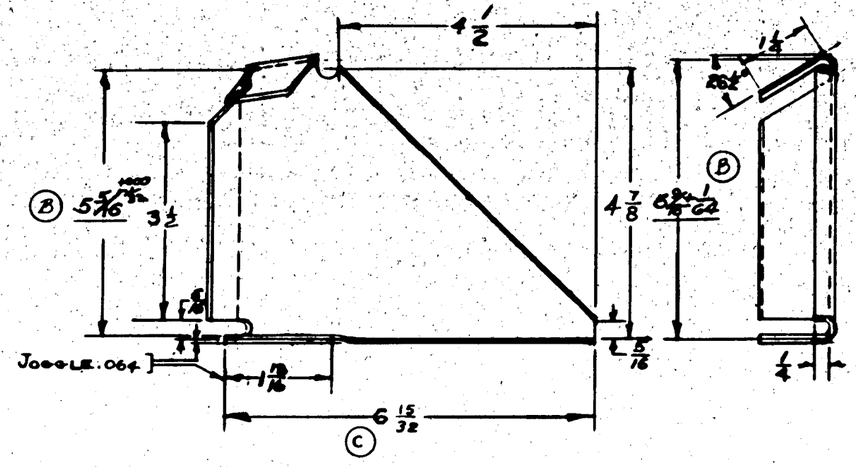

NOTE:-
ALLBEND RADII 1/8
ALLBEND RELIEF 1/8R

FINISH CODE

Z	ANODIC TREATMENT
P	P-27 PRIMER
AP	ALUMINIZED PRIMER
C	CADMIUM PLATE

ASSY. DASH NO.	MODEL	NEXT ASSY.	REQ.
-R	28-5AHN	28C5747	1
-L	28-5AHN	28C5747	1
-R	28S-AHC	28C5747-2	1
-L	28S-AHC	28C5747-0	1
-R	PBY-5A	28C5747-2	1
-L	PBY-5A	28C5747-0	1

REQUIREMENTS PER AIRPLANE

REPLACES

REPLACED BY

CALC WT. 20 LBS.

ACT. WT.

SCALE 6" = 1'-0"

LIGHT OD ENGINEERING UNLESS OTHERWISE SPECIFIED ± 1/32

STAMP PART NUMBER WHERE SHOWN

PART No.	STOCK	MATERIAL	SPEC.	LH REQ.	RH REQ.	LH REQ.	RH REQ.	LH REQ.	RH REQ.	LH REQ.	RH REQ.	LH REQ.	RH REQ.
PARTS LIST PER ASSY.	.064 X 7 5/8 X 8 5/16	AL. ALL 24SO 4TH COND. A		-0		-2		-3		-4		-5	

AC —— —— ——

NAVY SR53 HEAT TREAT | Z-P-3AP FINISH

J.H. HANSON 4/3/41 DRAFT | F. COLLINS CHECK | STRUCT. | MAT'L. APPROV. R.M.N. FAF | ENG.

NAME BRACE-CONTROLS-PULLEY BRACKET AT WHEELWELL CORNER - TOP

OPP. HAND 28C5746-R

CONSOLIDATED AIRCRAFT CORP. SAN DIEGO, CALIF.

DWG. SIZE D

28C5746

LET	ALTERATION	DATE	BY
A	[illegible] REVISED SEC. C-C 52-62-7 ADDED -6 DETAIL ADDED -7 & REVISED -5 PULLEY PART ADDED BOTTOM VIEW.	3-6-41	[illegible]
B	REPLACED-GASSY WITH 28C5767 ON FACE OF DWG & M-ADDED D(A)(2) DIMENSIONS & 7/8 DIA HOLE & NOTE	10-17-42	K
C	-7 .5/16 x 1 1/2 x 1 MICARTA WAS 1/4 x 1 1/2 x 1 MICARTA IN D/M & ON PACH.	1-18-43	K
D	Q4011L WAS Q4011-5. W/O WT. CHG	4-14-43	
E	REMOVED -7 (1/4 X 1 1/2 X 1 SHIM) REPLACED WITH 28C5140, Q4011-1-7 (1) WAS Q4011-1-6(1) WT. CHG. NEG.	8-20-43	
F	DIM 3/8 WAS 6 1/4. ADDED "11 (.191) HOLE: AN3D-7A BOLT (1) & AN365-D1032 NUT (1). PICK UP ONE BOLT AT INSTALL. WAS "PICKUP TWO BOLTS AT INSTALL" WT. CHG. NEG.	9-3-43	

EQUIP 28-ENGINE A10 PBY-5A

NOTE:-
DRILL-7/8" DIA (.875") HOLES TWO IN APT SIDE WEB-28B5527-6 & TWO IN FORWARD SIDE. BOLT BRACKETS THRU THESE HOLES AN38-8, AN960-A10 & AC365-1032 (4 PLACES)

"11 (.191) HOLE
AN3D-7A BOLT (1)
AC365-D1032 NUT (1)

℄ AIRPLANE

DECKLINE (REF)

SKIN LINE (REF)

28C5767 (B)

7/8 DIA. HOLE (B)

(B) (F) PICK UP ONE BOLT AT INSTALL

28B5527 (REF)

AN210-1
AN3-17
AN320-3
AN380-C2-2
AN960-A10

6 3/4 (A)

2 5/16

1 1/2 (A)

5/8

28C4012-6

6 1/4 (B)

5 1/2 (B)

7 5/8 (REF) (B)

(F)

28B5527-7 (REF)

(D) Q4011-1-7
(A) (E)
AN210-1 (2)

(A) (C) (E) 28C5140

10 7/8

28B5527-7 (REF)

1 1/8

12°

BOTTOM VIEW (A)

VIEW FWD AT CROSSBEAM
29" FWD OF STA 5.0

NOTE:
1. CUT CABLE CLEARANCE HOLES THRU WEB OF CROSSBEAM FROM HOLES IN BRACKET

FINISH CODE	
Z	ANODIC TREATMENT
P	P-27 PRIMER
AP	ALUMINIZED PRIMER
C	CADMIUM PLATE
GP	GREEN PRIME

ASSY. DASH No.	MODEL	NEXT ASSY.	QUAN.
PBY-5A	28C5584		1
28-SAMN	28C5730		1
28-SMC	28C5730		1
PBY-5A	28C5700		1

REQUIREMENTS PER AIRPLANE

REPLACES
REPLACED BY

SCALE 6"=1'0"

STAMP PART NUMBER WHERE SHOWN

PART No.	STOCK	MATERIAL	SPEC.	LH QUAN REQ. -0	RH QUAN REQ. -2	LH QUAN REQ. -3	RH QUAN REQ. -4	LH QUAN REQ. -5
AC365-D1032								
AN3D-7A								
28C5140								
28C5767	BRKT. ASSY.							
28C5892-6	BRKT. ASSY.							
Q4011-1-7								
AN960-A10								
AN38-8								
AC365-1032								
AN23-8								
AN320-3								
AN380-C2-2								
AN210-1								
AN3-17								

PARTS LIST PER ASSY.

AC			P	BMH	PACH C.N.
NAVY	Z-P-GP				K/PAH H.C.
HEAT TREAT	FINISH	DRAFT	CHECK	STRUCT.	MAT. APPROV. ENG.

NAME INSTALLATION-CONTROLS — TAB BRACKET - STA. 4.66.

CONSOLIDATED AIRCRAFT CORP. San Diego, Calif.

OPP. HAND

DWG. D SIZE 28C5748

VR 8/2.5702

LET	ALTERATION	DATE	BY
A	MATERIAL CHANGE IN B.M. -6 & -7 (.040 AL., SPEC. 47A10-A) WAS (.040 AL. ALLOY SHT., SPEC. 47A10 COND. T)	4-10-41	

E.O. R450
PBZY-3, OA-10, PBY-5A,
&-5, 28-5AMC, OAU-1

LINE DRILL #30 (128) THRU -6 & -7 USE AN442-D4, Q808-D4-23-2 PLACES

DIMPLE ½ I.D. X ⅞ O.D. X 1/16 DEEP.
LINE DRILL #10 (.193)
THRU. -6 & -7

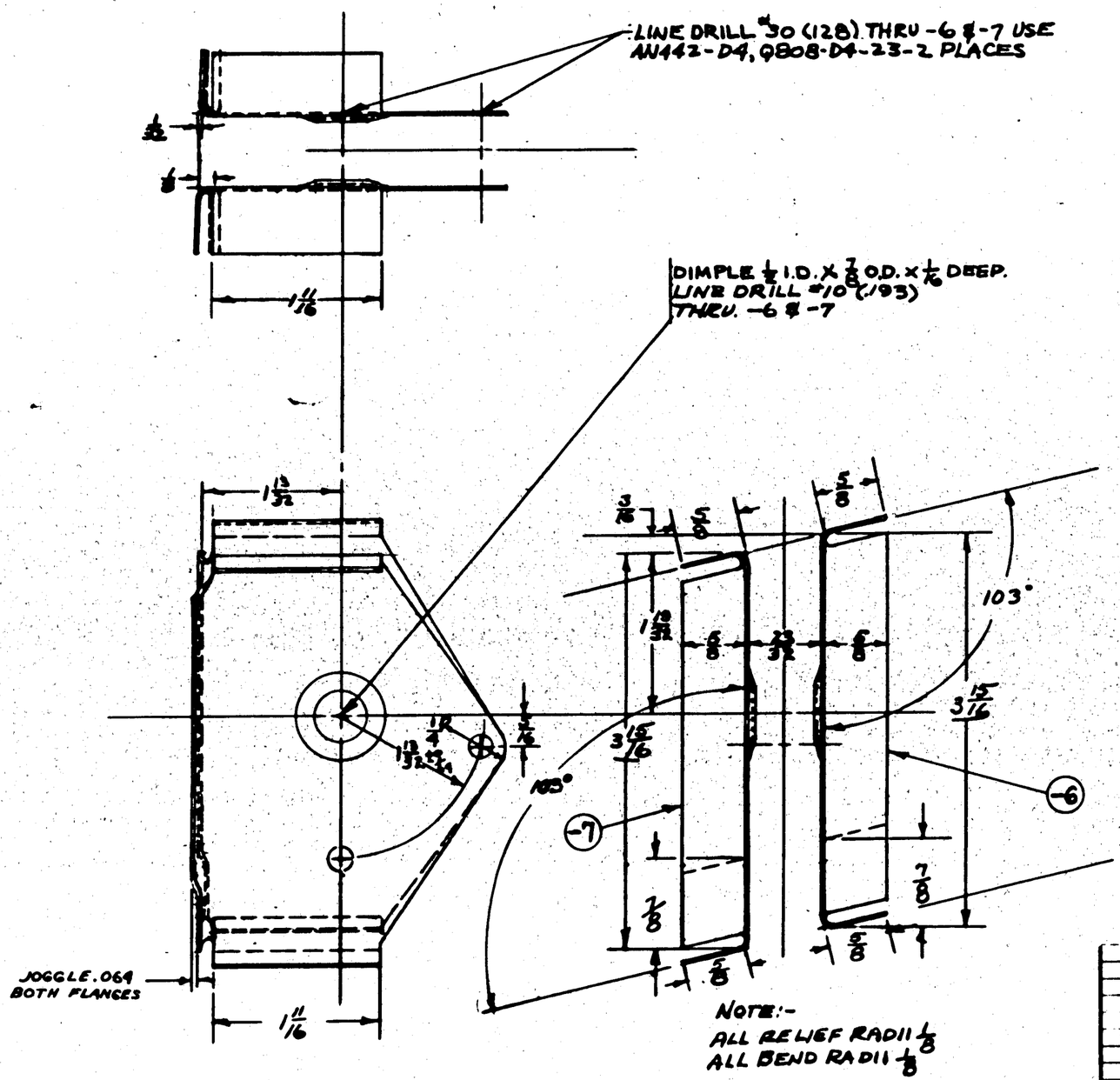

NOTE:-
ALL RELIEF RADII 1/8
ALL BEND RADII 1/8

FINISH CODE

Z	ANODIC TREATMENT
P	P-27 PRIMER
AP	ALUMINIZED PRIMER
C	CADMIUM PLATE

ASSY. DASH NO.	MODEL	NEXT ASSY	REQ
	OA-10	28C40M-2	1
	28S-AMC	28C9019-2	1
	PBY-5A	28C9019-2	1

REQUIREMENTS PER AIRPLANE

REPLACES — CALC WT. .02

REPLACED BY — ACT WT.

SCALE 12" = 1'0"

STAMP PART NUMBER WHERE SHOWN

Q808-D4-23
AN442-D4

PART NO	STOCK	MATERIAL	SPEC.	LH REQ. -0	RH REQ. -2	LH REQ. -3	RH REQ. -4	LH REQ. -5	RH REQ.
-7	.040 X 1½ X 5½	AL. 2S50	47A10-A	1					
-6	.040 X 1½ X 5½	AL. 2S50	47A10-A	1					

PARTS LIST PER ASSY.

AC		J. N. HARRISON		GREEN	FAF	
NAVY 5R-53	Z-P-2AL	4/29/41			J. KERR FAF	JWH
HEAT TREAT	FINISH	DRAFT.	CHECK	STRUCT.	MAT	APPROV.	ENG.

NAME ASSEMBLY-CONTROLS-AILERON TAB PULLEY BRACKET STA 5.0-AFT

CONSOLIDATED AIRCRAFT CORP. SAN DIEGO, CALIF.

OPP. HAND

DWG. SIZE D — 2805749

VV

PBY-5A E.O A24120
9A-10, 28-5AMC

LET	ALTERATION	DATE	BY
A	CHG. DIM.: 4 1/2 WAS 5 1/2, 9 5/8 WAS 8 29/32, 2 1/16 WAS 2, 7 15/32 WAS 8 5/32, 15 7/32 WAS 16 3/32, 8 7/8 WAS 8 3/4, IN R/H CHG. LENGTH OF -8 & -7 FROM 32 TO 33 1/4, 11/16 IN -8 WAS 3/4, 30 7/16 DIM. WAS 30 3/4	8-29-41	HOEN

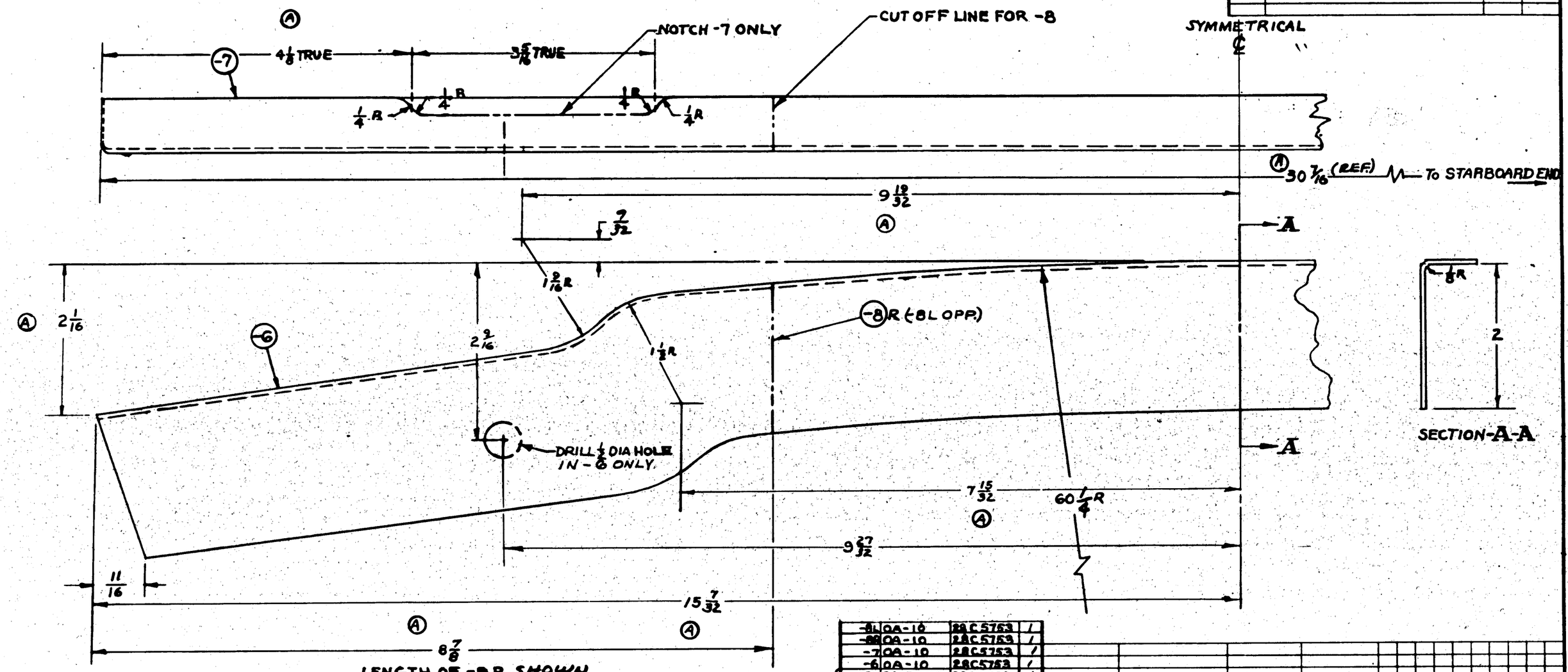

-8L	0A-10	28C5753	/	
-8R	0A-10	28C5753	/	
-7	0A-10	28C5753	/	
-6	0A-10	28C5753	/	
-8L	28-5AMC	28C5753	/	SHIPS 1 ONLY
-8R	28-5-AMC	28C5753	/	
-7	28-5-AMC	28C5753	/	
-6	28-5-AMC	28C5753	/	
-8L	PBY-5A	28C5753	/	SHIPS 294 TO 300 (210) 214
-8R	PBY-5A	28C5753	/	
-7	PBY-5A	28C5753	/	
-6	PBY-5A	28C5753	/	

ASSY. DASH NO.	MODEL	NEXT ASSY.	REQ.

REQUIREMENTS PER AIRPLANE

REPLACES -6 2.6 LBS. CALC WT.

REPLACED BY — ASSY. WT.

LIMIT OF DIMENSIONS UNLESS OTHERWISE SPECIFIED ± 1/32 — SCALE 12" = 1'0"

STAMP PART NUMBER WHERE SHOWN

	PART NO.	STOCK	MATERIAL	SPEC.	LH REQ. -0	RH REQ. -0	LH REQ. -2	RH REQ. -2	LH REQ. -3	RH REQ. -3	LH REQ. -4	RH REQ. -4	LH REQ. -5	RH REQ. -5
	-8R	.064 x 2 3/8 x 11 1/8	ALCLAD 2650	4-7AR CONDA	/									
	-8L	.064 x 2 3/8 x 11 1/8	"	4-7AR CONDA	/									
A	-7	.064 x 2 3/8 x 33 1/4	"	4-7AR CONDA	/									
	-6	.064 x 2 3/8 x 33 1/8	ALCLAD 2450	4-7AR CONDA	/									

PARTS LIST PER ASSY.

AC —		SH	ZP		BMN	
NAVY NONE	Z-P-2AL	1/13/41				
HEAT TREAT	FINISH	DRAFT	CHECK	STRUCT	MAT	ENG

NAME BEAM-CONTROLS-PULLEY SUPPORT AFT STA 5.0

OPP. HAND

CONSOLIDATED AIRCRAFT CORP. SAN DIEGO, CALIF.

DWG. SIZE D — 28C5755

JAR

LET	ALTERATION	DATE	BY
A	3430 COND A WAS 3431T		
	COND T 3RS1 HEAT TREAT		
	WAS NONE IN R/M.		
B	REVISED PER ENG'G		

E.O. A338

E.O. NG19

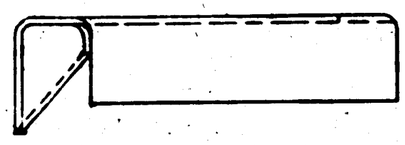

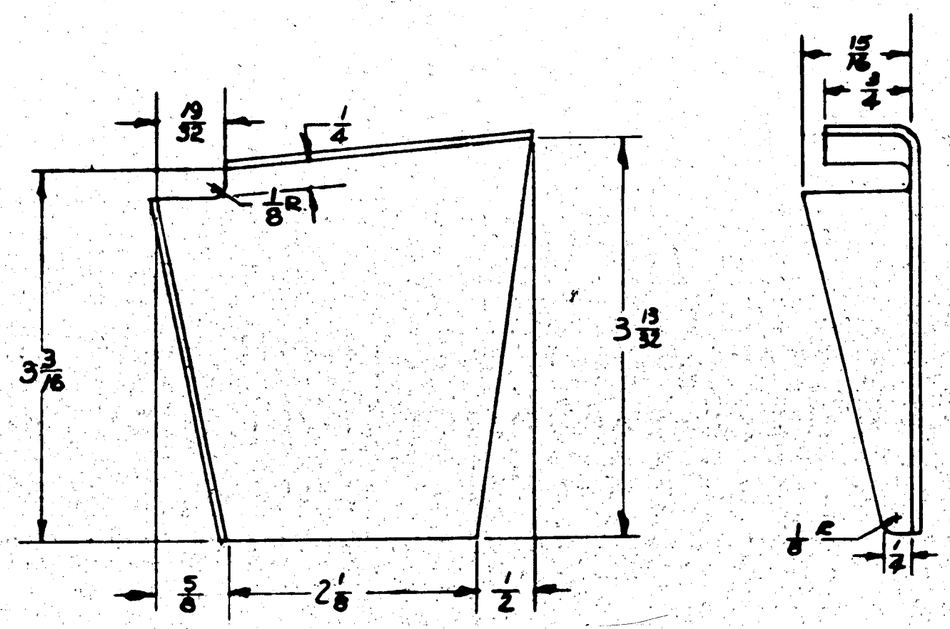

NOTE:
BEND RADII 1/8
BEND RELIEF RADII 1/8

ASSY. DASH No.	MODEL	NEXT ASSY.	QTY.
-R	28-SA4K	28C5753	2
-L	28-SA4K	28C5753	2
-R	PBY-5A	28C5753	3
-L	PBY-5A	28C5753	3

SHIPS ONLY

(HULLS 28-TO 300 & 310 TO 314)

REQUIREMENTS PER AIRPLANE

REPLACES

REPLACED BY

CALC. WT. .05

ACT. WT.

SCALE 12" = 1'0"

STAMP PART NUMBER WHERE SHOWN

PART No.	STOCK	MATERIAL	SPEC.
-6	.064 X 3 1/4 X 4 1/16	ALCLAD 2450	3 YR CORR

PARTS LIST PER ASSY.

LH REQ.	RH REQ.	LH REQ.	RH REQ.	LH REQ.	RH REQ.	LH REQ.	RH REQ.	LH REQ.	RH REQ.
-0		-2		-3		-4		-5	

A

A.C.
NAVY 3YR 53
HEAT TREAT (A)

Z-P-ZAL
FINISH

DRAFT	CHECK	STRUCT	MAT	APPROV	ENG
P		YGB		CN
2/10/41	GREEN	JFR		GC

NAME GUSSET-CONTROLS-PULLEY SUPPORT-STA. 5.0

OPP. HAND 28C5756-R

CONSOLIDATED AIRCRAFT CORP. SAN DIEGO, CALIF.

SIZE D

28C5756

R

LET	ALTERATION	DATE	BY
A	ADDED AN515-8D-10 & AN365-0832 OR AN442-A4 8 PLACES		
B	REMOVED FROM FACE A DIM FOR C5764 (1), 28C2411 (1), AN515-D8-10 (5) & AC365-D832(5) REMOVED DIMS. WITH NOTES & DIM IN NOTE CALLING OUT STD SCREWS & NUTS 3 PLACES WAS 6 PLACES		
C	ADDED 28C5527 & DETAIL "A" NEW WT. CHG.		
D	CREATED -2 ASSY (NO CHG NEC)		

E.O. A14407

E.O. A14343

E.O. 22458

CUT THREE HOLES $\frac{3}{4}$ (.750) DIA.

DECK LINE (REF.) ℄

$5\frac{1}{2}$

$4\frac{1}{4}$

$3\frac{5}{16}$

28C5765 (B)
(FOR -0 ASSY ONLY)

RUDDER

ELEV DN

ELEV UP

$5\frac{11}{16}$ APPROX.

HOLE IN WEB. SEE DETAIL "A".

LOCATE TO SUIT CABLES

28C5527 (C)

$3\frac{1}{4}$ APPROX.

$9\frac{1}{2}$

10

$10\frac{1}{2}$

THIS FAIRLEAD MOUNTED ON RIGHT HAND SIDE SYMMETERICAL TO VIEW AS SHOWN. (-0 ASSY. ONLY)

AN515-D8-10 (A)
AN365-D832
OR AN442-A4
9 PLACES (-0 ASSY.)
3 PLACES (-2 ASSY.)
(B)

VIEW LOOKING FORWARD
SCALE 6"=1'0"

TO DECK LINE

$4\frac{7}{8}$ APPROX.

$3\frac{5}{8}$ APPROX. — TO ℄ SHIP

$\frac{3}{8}$

$\frac{7}{32}$ R.

(C)

DETAIL - A
SCALE 12"=1'-0"
(HOLE IN BLK'D #5 WEB.)

℄ AIRPLANE

-2	28-5AMN	28C5750	1
-2	PBY-5A	28C5864	1
-2	PBY-5A	28C5700	1
-0	PBY5A	28C5700	1
-0	28-5AMC	28C5750	1
ASSY. DASH NO.	MODEL	NEXT ASSY.	REQ.

7049M } C-8847 → HULL 400 & ON.
7713 } TO HULL 479

REQUIREMENTS PER AIRPLANE

REPLACES — CALC WT. .03#

REPLACED BY — ACT. WT.

SCALE 6"=1'-0" & NOTED

STAMP PART NUMBER WHERE SHOWN

PART NO.	STOCK	MATERIAL	SPEC.	LH REQ.	RH REQ.	LH REQ.	RH REQ.	LH REQ.	RH REQ.	LH REQ.	RH REQ.	CH REQ.
AN442-A4				3	3							
AC365-D832				3	3							
AN515-D8-10				3	3							
28C5527				1	1							
28C5765				2	-							

PARTS LIST PER ASSY. -0 -2 -3 -4 -5

A

A.C.			DIM. WIRING	P	
NAVY NONE	NATURAL	2-18-41	PATTERN	GREEN	W.L.F.B. 6-20-41 G.C.
HEAT TREAT	FINISH	DRAFT	CHECK	STRUCT	MAT'L APPROV. ENGR.

NAME INSTALLATION-CONTROLS-FAIRLEADS SURFACE & TAB CONTROL CABLES.

OPP. HAND

CONSOLIDATED AIRCRAFT CORP. San Diego, Calif.

SIZE D — 28C6763

R

LET	ALTERATION	DATE	BY
A	ADDED -6L & -6R; -7L & -7R; -8L & -8R		
	TO 4/17 NAS -6, -7, & -8	2-5-42	Stanley
B	REMOVED 3/8" DIAM. HOLE FROM FLANGE, LOCATED INSIDE OF RIVET LOCATED .88" R. WAS 1/4" R.		
	ADD 5 DIA. REMOVE 3 DIA. ADDED R	3-4-42	Tasco
C	ADDED C.A.C. #NU-60 & AN425-D4(2). REM'D NOTE "3 EQUAL SPACES" & REVISED RIVET PATTERN. WEIGHT	6-3-42	EMS
D	ADDED CUTOUT IN -8 & LOCATING DIMS. CREATED SECTION VIEW "A-A" -10 1/32 X 1 X 2 1/2" WAS 3/16 WT. CHG. REQ.	6-3-42	EMS
E	CREATED -11	6-8-42	Stanley

E.O. A44460

E.O. 440163

-6 (REF.)

-8 REM

A-A

AN425-D5 3 PLACES IN -9 ONLY FLUSH INSIDE 3 EQ SPACES

AN425-D5 7 EQ SPACES C'SK TO BE INSIDE

DRILL "U" (.368) LINE REAM .3753 .3740

1 1/2 DIA

1 DIA

AN425-D4(2) C'SK INSIDE

AN425-D5 C'SK INSIDE 2 PLACES IN -11

C.A.C. #NU60

-7L REF

-6L REF

AN442-D4 3 PLACES

AN442-D5 (3 PLACES)

-8L REF

CEMENT IN PLACE WITH NEOPRENE CEMENT OR EQUIV.

-10

-11

9

NOTE
ALL BEND AND RELIEF RADII TO BE 1/8.

FINISH CODE	
Z	ANODIC TREATMENT
P	P-27 PRIMER
AP	ALUMINIZED PRIMER
C	CADMIUM PLATE

			CAC #NU60 (2281-064)	CLEVITE STEEL NUT CORP. 1
			AN425-D4	
			AN425-D5	
			AN442-D4	
			AN442-D5	
-R	PBY 5	28C6014	1	-11 .064 x 1 3/8 x 5/8 ALC. 24ST 4T4A-T 1 1
-L	PBY 5	28C6014	1	-10 1/32 x 1 x 2 1/2 NEOPRENE N-11 1 1
-R	PBY-5A	28C6014	1	-9 .064 x 3 1/8 x 1 5/8 ALCLAD 24ST 4T4B CONDT 1 1
-L	PBY-5A	28C6014	1	-8R .064 x 6 5/8 x 7 1/2 ALCLAD 24S0 4T4B CONDA - 1
ASSY. BASIS No.	MODEL	NEXT ASSY.	REQ.	-8L .064 x 6 5/8 x 7 1/2 ALCLAD 24S0 4T4B CONDA 1 -
REQUIREMENTS PER AIRPLANE				-7R .064 x 8 x 3 1/4 ALCLAD 24S0 4T4B CONDA - 1
REPLACES 28C1135		CALC. WT.		-7L .064 x 8 x 3 1/4 ALCLAD 24S0 4T4B CONDA 1 -
REPLACED BY		ACT. WT.		-6R .064 x 8 1/2 x 6 5/8 ALCLAD 24S0 4T4B CONDA - 1
LIMIT ON DIMENSIONS UNLESS OTHERWISE SPECIFIED ± 1/32	SCALE 12" = 1'-0"			-6L .064 x 8 1/2 x 6 5/8 ALCLAD 24S0 4T4B CONDA 1 -
STAMP PART NUMBER WHERE SHOWN				PART NO. / STOCK / MATERIAL / SPEC. / LH RH LH RH LH RH LH RH LH RH REQ.
				PARTS LIST PER ASSY. -0 -2 -3 -4 -5

AC / NAVY		ASSEMBLY	Stanley	GERBER		PARKS	ALBERG
5R53-T.	Z-P-	4/11/42	12-4-41		3-2-42	3-10-42	WOLD
HEAT TREAT	FINISH	DRAFT	CHECK	STRUCT	MAT	APPROV	ENG.

NAME BRACKET ASSEMBLY - CONTROLS - STA. #5 OUTER AILERON PULLEY

OPP. HAND 28C6001-R

CONSOLIDATED AIRCRAFT CORP. SAN DIEGO, CALIF.

DWG D SIZE 28C6001

R

LET	ALTERATION	DATE	BY
A	REDESIGNED TO PROVIDE 90° FLANGE ON OUTER END	2-6-42	PARISH

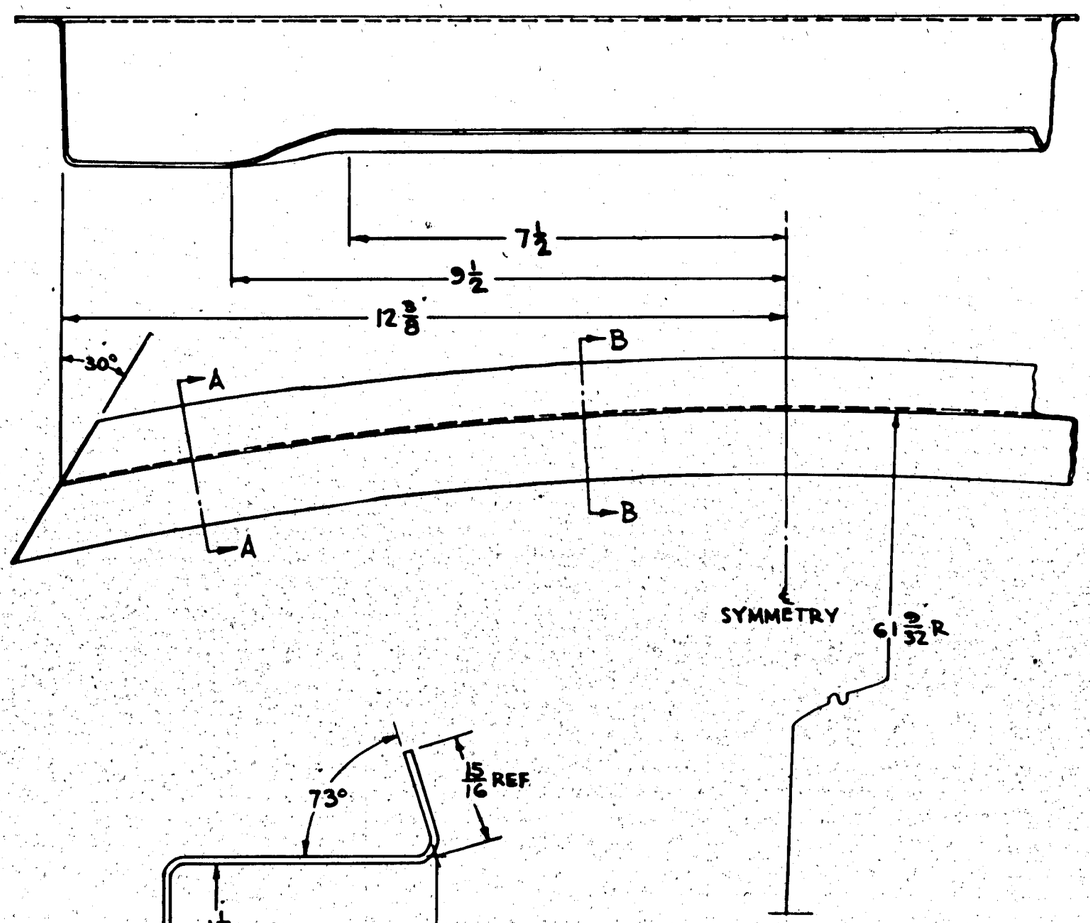

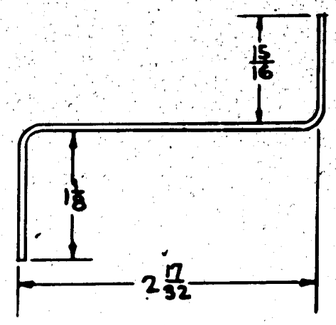

SEC. A-A
SCALE 12"=1'0"

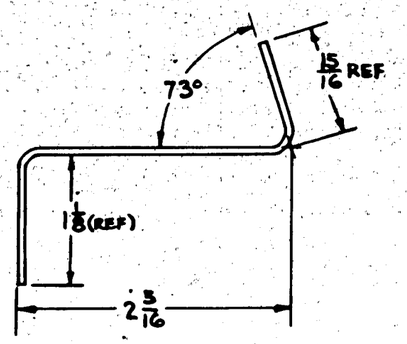

SEC. B-B
SCALE 12"=1'0"

ALL BEND RADII 1/8

FINISH CODE	
Z	ANODIC TREATMENT
P	P-27 PRIMER
AP	ALUMINIZED PRIMER
C	CADMIUM PLATE

RUSH RELEASED 3-19-42

CONT 21876 SHIP 251 & ON

ASSY. DASH NO.	MODEL	NEXT ASSY.	REQ.
	P5Y5	28D1500	1
	P5Y5B	28B1500	1

REQUIREMENTS PER AIRPLANE

REPLACES 28D1505-2 | .78 CALC WT.

REPLACED BY | ACT WT

SCALE 6"=1'-0" & NOTED

STAMP PART NUMBER WHERE SHOWN

PART NO	STOCK	MATERIAL	SPEC.	LH REQ.	RH REQ.	LH REQ.	RH REQ.	LH REQ.	RH REQ.	LH REQ.	RH REQ.	LH REQ.	RH REQ.
	.064 X 9 X 31½	ALC 2450	47A8-A	-0		-2/		-3		-4		-5	

PARTS LIST PER ASSY.

AC		3-6-42	3-7-42	GERBER	PACHL	ALDRICH	
NAVY SR 53	Z-P	PASCO	Stetson		REED		MC VICKER
HEAT TREAT	FINISH	DRAFT	CHECK	STRUCT	MAT	APPROV	ENG

NAME REINFORCEMENT-CONTROLS STA 5.0 UPPER AIL. PULLEY BR'K'T-DECK FWD

CONSOLIDATED AIRCRAFT CORP. SAN DIEGO, CALIF.

OPP HAND

DWG D | 28C6018

SHEET

R 3-25-42

LET	ALTERATION	DATE	BY

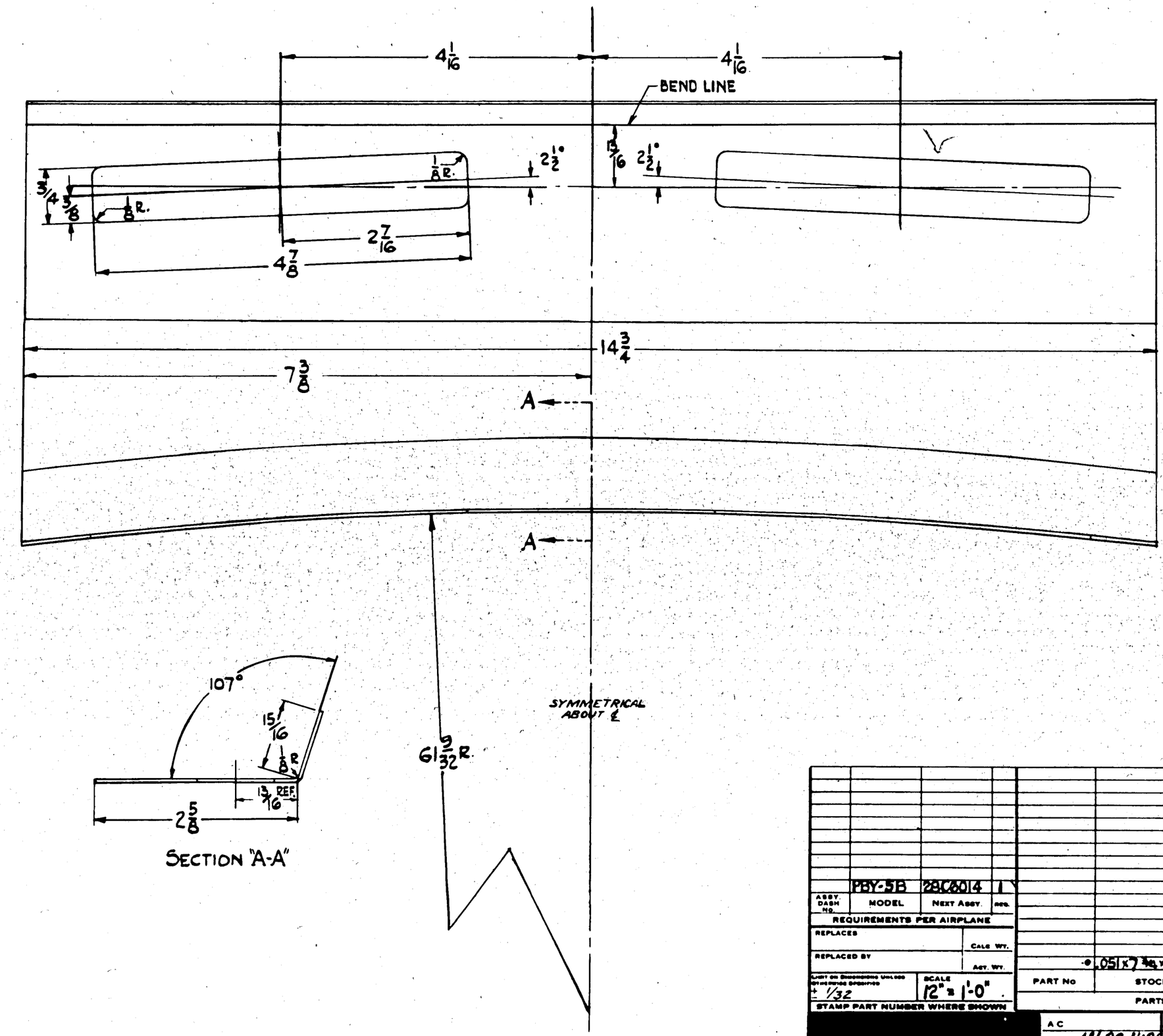

SECTION "A-A"

ASSY. DASH NO.	MODEL	NEXT ASSY.	REQ'D.
	PBY-5B	28C6014	1

REQUIREMENTS PER AIRPLANE

REPLACES — CALC WT.

REPLACED BY — ACT. WT.

UNLESS OTHERWISE SPECIFIED ± 1/32 — SCALE 12" = 1'-0"

STAMP PART NUMBER WHERE SHOWN

PART NO	STOCK	MATERIAL	SPEC.	LH REQ. -0	RH REQ. -2	LH REQ. -3	RH REQ. -4	LH REQ. -5	RH REQ.
	.051 x 7 3/8 x 19	ALCLAD 2450 47AB CONRA							

PARTS LIST PER ASSY.

A C		11-27-41	12-5-41				
NAVY AN-QQ-HA8C	Z-P	Steven	MARTOS		AER		
HEAT TREAT	FINISH	DRAFT	CHECK	STRUCT	MAT	APPROV	ENG

NAME REINFORCEMENT - CONTROLS STA. 5.0 - UPPER AIL. PULLEY BR'K'T. - DECK AFT

OPP. HAND

CONSOLIDATED AIRCRAFT CORP. SAN DIEGO, CALIF.

DWG. SIZE D — 28C6019

R 2-21-42

E.O.# A54515

LET	ALTERATION	DATE	BY
A	"NONE" IN FINISH BLK WAS "ZP"; NO WT. CHG.	3-27-42	STAFF

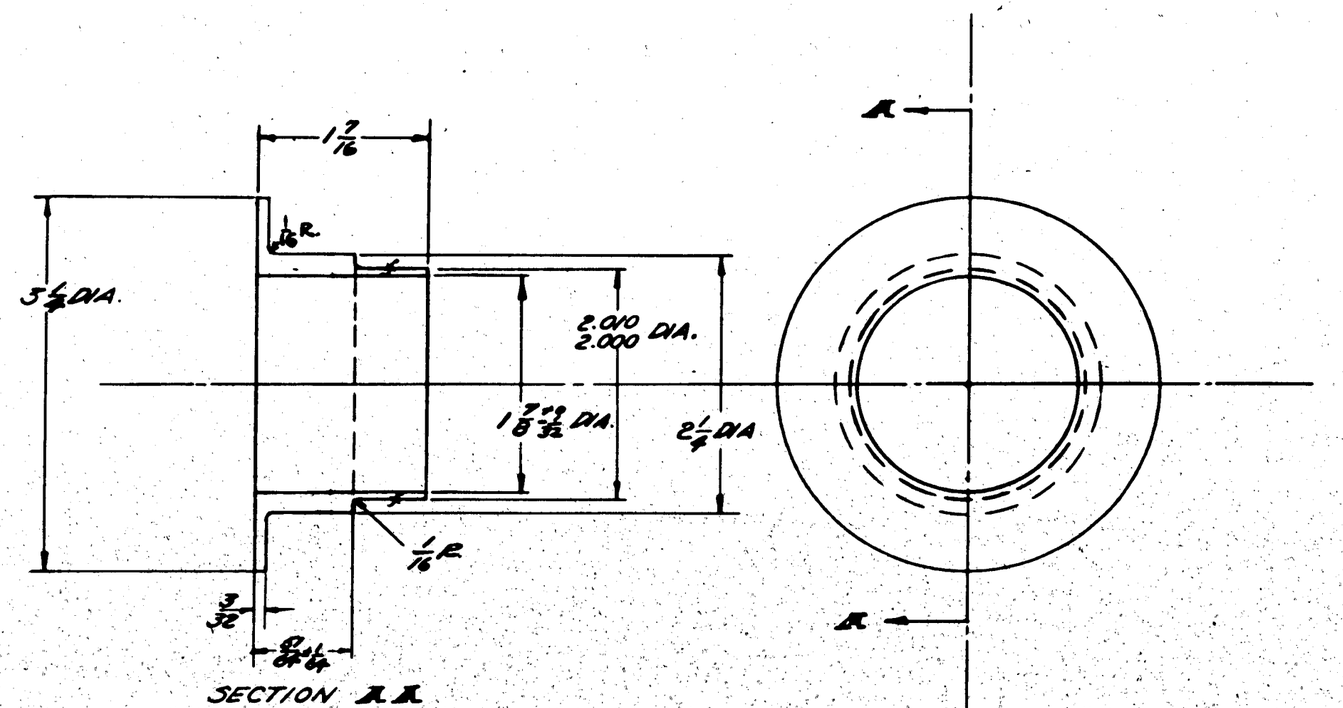

SECTION A-A

RUSH RELEASED 3-27-42

ASSY. DASH NO.	MODEL	NEXT ASSY.	QUAN.
	PB-3A/N	28C6036	A
	PBY-5A	28C6036	A
	PBY-5	28C6036	A

REQUIREMENTS PER AIRPLANE

REPLACES — .06 GALS. WT.

REPLACED BY — ASY. WT.

LIMIT OF DIMENSIONS UNLESS OTHERWISE STATED ± 1/32 — SCALE 12"=1'-0"

STAMP PART NUMBER WHERE SHOWN

PART NO.	STOCK	MATERIAL	SPEC.	LH REQ. -0	RH REQ. -2	LH REQ. -3	RH REQ. -4	LH REQ. -5	RH REQ.
	3 1/4 OD X 1 7/8	ALL BAR	86A9	1					

PARTS LIST PER ASSY.

A.C.

NAVY NONE — NONE

HEAT TREAT — FINISH

PARTS STOCK — GREEN — 3-27-42 — ALBRECHT

DRAFT — CHECK — STRUCT — MAT — APPROV — ENG.

NAME RETAINER - CONTROLS-RUDDER PEDAL - LOWER BEARING

OPP. HAND —

DWG. D — 28C6034

CONSOLIDATED AIRCRAFT CORP. WF SAN DIEGO, CALIF

R 4-20-42

LET	ALTERATION	DATE	BY
A	AN442-D4 WAS AN443-4D4		
	NO WT. CHG	7-3-42	DADMB

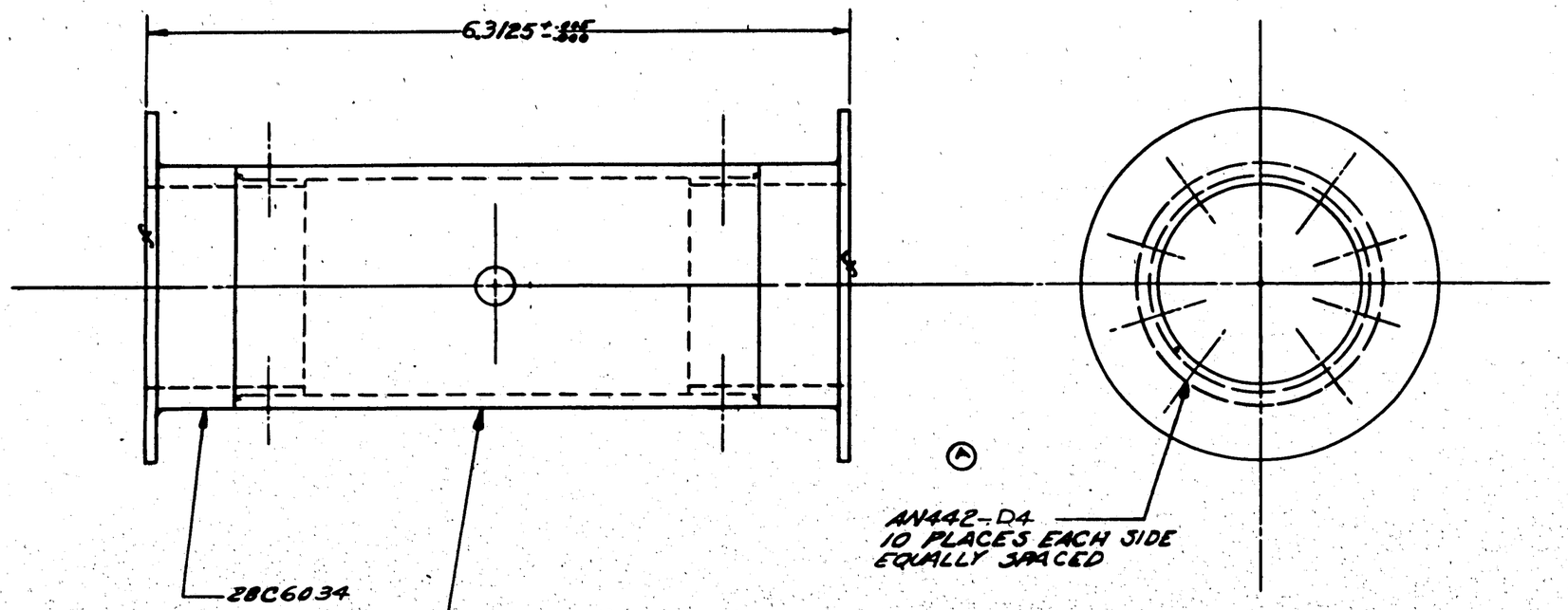

RUSH RELEASED 3-27-42

FINISH CODE	
Z	ANODIC TREATMENT
P	P-27 PRIMER
AP	ALUMINIZED PRIMER
C	CADMIUM PLATE

HULL 687 & ON

ASSY. DASH NO.	MODEL	NEXT ASSY.	REQ.
	PBY-5A	28C6030	4
	PBY-5B	28C6030	4
	PBY-5A	28C6030	4
	PBY-5	28C6030	4

REQUIREMENTS PER AIRPLANE

REPLACES — CALC. WT. .28

REPLACED BY — ASSY. WT.

SCALE 12"=1'-0"

STAMP PART NUMBER WHERE SHOWN

AN442D4

PART No	STOCK	MATERIAL	SPEC.	LH REQ. -0	RH REQ. -2	LH REQ. -3	RH REQ. -4	LH REQ. -5	RH REQ.
28C6031					1				
28C6034							1		

PARTS LIST PER ASSY.

AC		PRIS	STONE	GERBER	J.F.R.	J.W.K.
NAVY NONE	ZP	3-25-42	3-26-42	COPENHAGEN		
HEAT TREAT	FINISH	DRAFT	CHECK	STRUCT	MAT	APPROV. ENG.

NAME ASSEMBLY-CONTROLS-RUDDER PEDAL-LOWER HUB

OPP. HAND —

CONSOLIDATED AIRCRAFT CORP. SAN DIEGO, CALIF.

DWG. SIZE D — 28C6036

R

28C6036

LET	ALTERATION	DATE	BY
L	REDRAWN & REVISED TO SHOW SEPARATE VIEWS FOR -0 & -5 ASSYS	10-25-41	[illegible]
M	1/16 WAS 1 1/16 & 1 3/8 WAS 1 1/8. WT. CHG. NEG.	4-7-42	[illegible]
N	-5 WAS -4. ADDED 1 HOLE TO MAKE -6 SAME AS -2. REMOVED NOTE: -6 SAME — — 3/16 DIA HOLES ON FACE. REM'VD -6, ADDED -2 TO -BASS'Y REQ. IN BM		
	NO WT CHG.	9-1-42	[illegible]
P	IN 3RD REMOVED CHR PER SHT 2 SPEC 47514 FOR -2 & -4, REPLACED WITH "NOTED" REMOVED FROM FACE OF DWG. "H.T. NOTE: PH-5-10 NORMALIZE." ADDED TO FACE OF DWG. MAT. NOTE FOR -2 & -4, 1/32 (WT. CHG. NEG.)	12-17-42	[illegible]

E.O. A21745

E.O. A46831

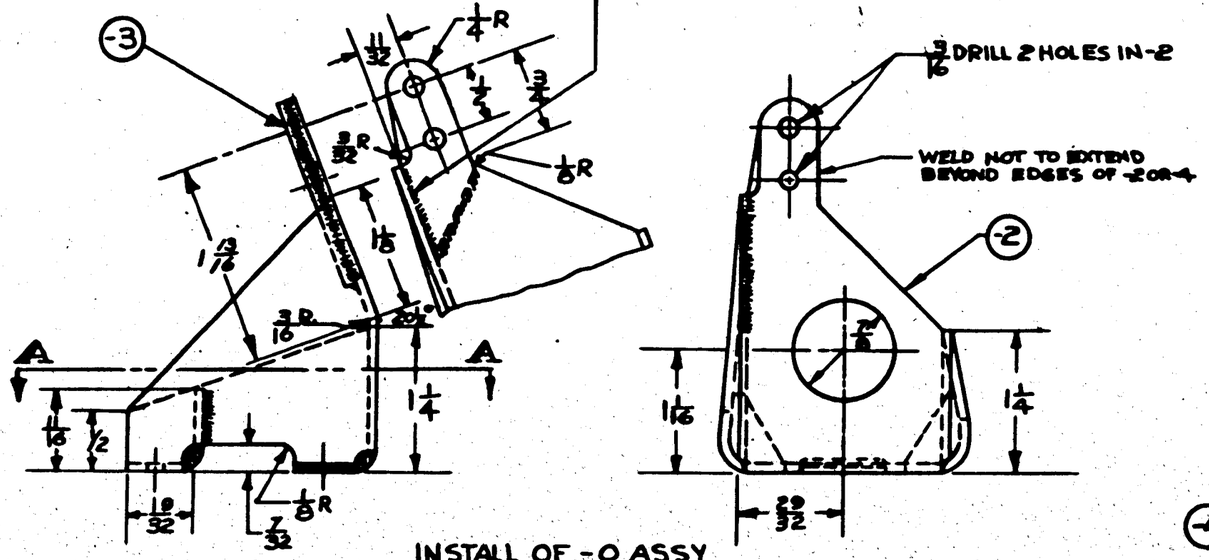

INSTALL OF -0 ASSY

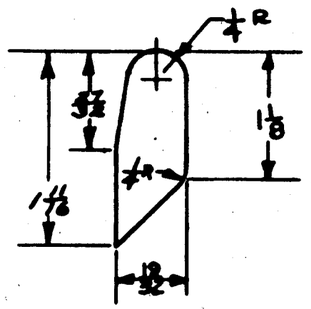

DETAIL -3

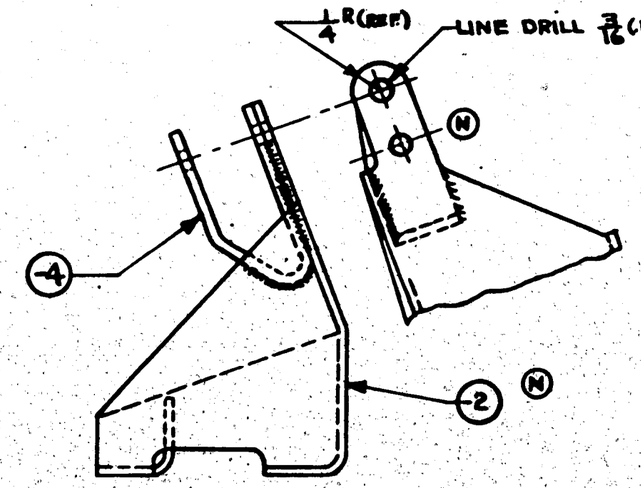

-5 ASSY

FINISH CODE	
Z	ANODIC TREATMENT
P	P-27 PRIMER
AP	ALUMINIZED PRIMER
C	CADMIUM PLATE

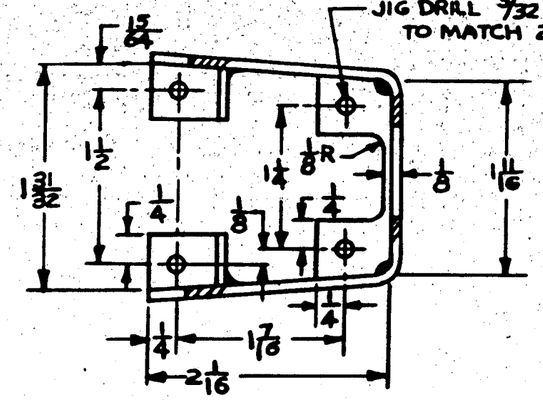

SECTION A-A

TYP. FOR -2

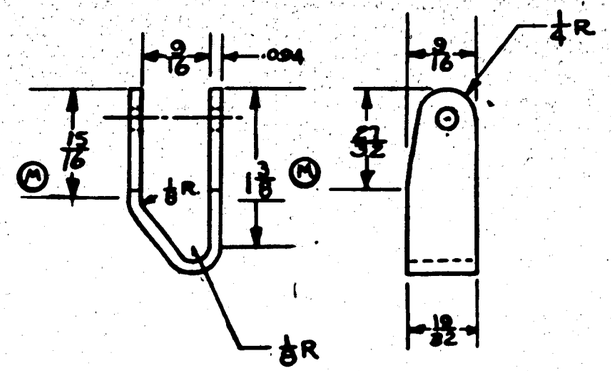

DETAIL -4

MATERIAL NOTE - FOR -2 & -4

1 - SAE. 1020 OR SAE. 1025 STEEL SHEET, SPEC. AN-S-11, H.T. 55,000 LB/IN. TO 65,000 LB/IN.

2 - CHROME MOLY STEEL SHEET, SPEC. AN-QQ-S-685 COND. A-I, H.T. 90,000 TO 125,000 LB/IN.

NOTE
ALL BEND RADII TO BE 3/32
TORCH WELD WHERE SHOWN
UNLESS OTHERWISE SPECIFIED

ASSY. DASH NO.	MODEL	NEXT ASSY.	REQ.
-5	28D-5AMC	28D2019	4
-6	28D-5MC		4
-5	28D-5AMN		4
-5	28D-5MN		4
-5	28D-5AM		4
-5	28D-5ME		4
-5	28D-5B		4
-3	28D-5A		4
-3	28D-5	28D2019	4
-0	X28D2Y-4	28D2046	
-0	X28D2Y-4	28D2048	
-0	28DY-4	28D2044	
-0	28DY-4	28D2038	
-0	28DY-3	28D2042	
-0	28DY-3	28D2040	

REQUIREMENTS PER AIRPLANE

REPLACES 28D2019-1-9-37 .226 CALC. WT.

REPLACED BY

ACT. WT.

LIMIT OF DIMENSIONAL VARIATION +1/32 SCALE 12"=1'-0"

STAMP PART NUMBER WHERE SHOWN

PART NO.	STOCK	MATERIAL	SPEC.	LH REQ.	RH REQ.	LH REQ.	RH REQ.	LH REQ.	RH REQ.	LH REQ.	RH REQ.
-4	.094 x 3 1/4 x 5 7/8	NOTED	NOTED								
-5	.094 x 3 1/4 x 5 1/4	CHR MOLY SH	47514	1							
-2	.094 x 4 1/2 x 7/8	NOTED	NOTED		1						
PARTS LIST PER ASSY.				-0	5						

A C		10-24-41	KAEL	GERBER			W.N.D.
NAVY NOTED	C-P						10-29-41
HEAT TREAT	FINISH	DRAFT	CHECK	STRUCT	MAT	APPROV	ENG.

NAME LEVER ASSEMBLY COWL FLAP CONTROL

OPP. HAND

CONSOLIDATED AIRCRAFT CORP. SAN DIEGO, CALIF.

SIZE D

28D2019

R

LET	ALTERATION	DATE	BY
A	ADDED STENCIL NOTE	8-1-42	M'D
B	OPENING AND -13 ADDED	11-15-42	LASH
C	Q4303-D5 NOW Q4303-D4	"	"
	NOTE ADDED #3	"	"
D	-12 FILLET ADDED	"	"
	CUT OUT -9 3/4 FROM A	"	"
	3/32 RADIUS WAS 1/32	"	"
E	1/4 DIM & 1/16R ADDED	9-26-42	AFH
F	DZUS FASTENERS & CUTOUT	12-11-42	[illegible]
	REMOVED FROM PART 1 (2)		
	7/8 DIM. REPLACES 15/16 & 2 3/4 DIM.		
	1 1/8 DIM. ADDED. NOTE REMOVED		
G	CHG'D 2 3/16 DIM. TO 2 1/4 NO WT. CHG.	7-1-43	SWAN
H	-7 MAT. Y56A12T WAS Y56A12T:		
	REMOVED DIM 1 1/8 FROM DIM. FROM EDGE OF CHG.	7-16-43	STRANG
J	NOTE "STENCIL --- LETTERS		
	WAS "STENCIL AS SHOWN		
	IN 1/2 HIGH BLACK LETTERS		
	NO WT. CHG.	5-24-43	ROSS WHITE

E.O. 20582-A
E.O. 27336
E.O. 20598
E.O. 20586
ROHR E.O. # S44A
" E.O. # 893

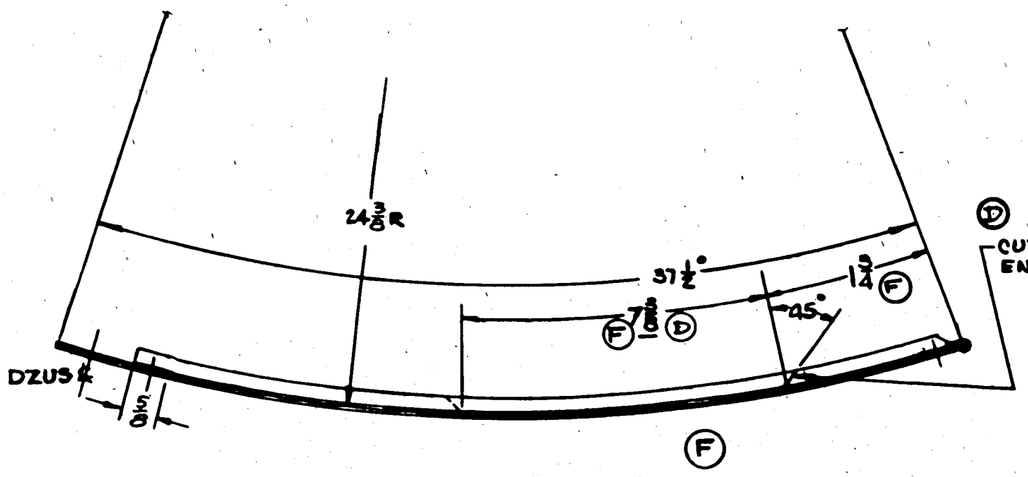

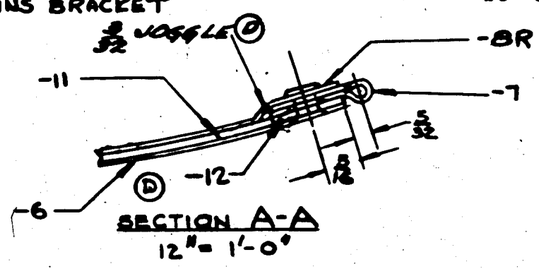

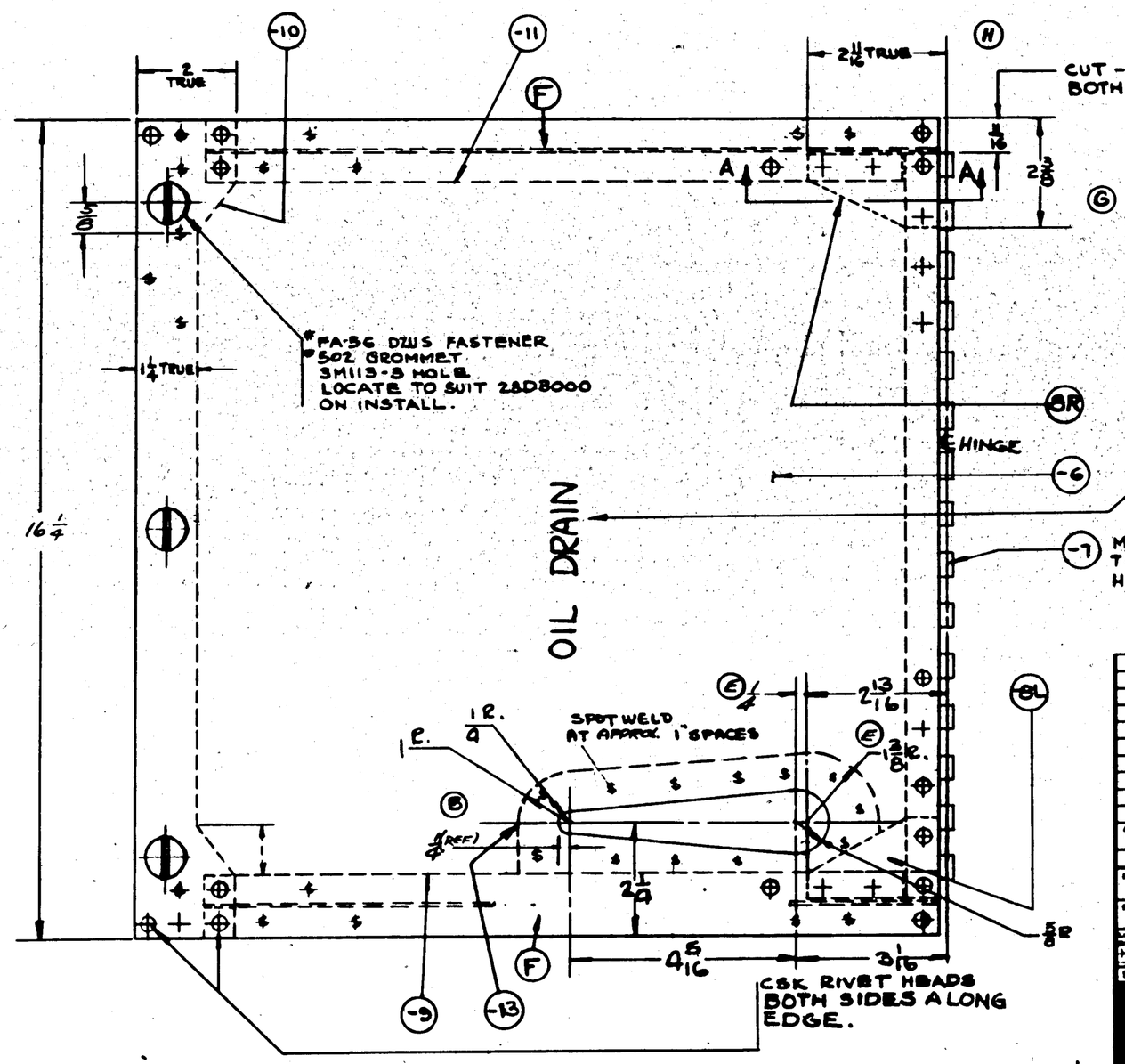

NOTE—

1) SPACE RIVETS & SPOTWELDS APPROX. AS SHOWN MIN EDGE DIST. 1/4

2) ALL RIVETS TO BE Q4303 D4 & FLUSH OUTSIDE

3) FLUSH RIVETS ON INSIDE THRU OUTER EDGE OF -9 & -11 AND IN FOUR CORNERS OF PANEL (INSIDE ONLY)

FINISH CODE	
Z	ANODIC TREATMENT
P	P-27 PRIMER
AP	ALUMINIZED PRIMER
C	CADMIUM PLATE

ASSY DASH NO.	MODEL	NEXT ASSY.	REQ
	PBY-5B	28D3000	2
	ALL 28-5's	28D3000	2 GA
	PBY-5&5A	28D3000	2

REQUIREMENTS PER AIRPLANE

REPLACES — CALC WT.

REPLACED BY — ACT WT.

SCALE 6"=1'-0" & NOTED

STAMP PART NUMBER WHERE SHOWN

PART NO.	STOCK	MATERIAL	SPEC.	LH REQ. -0	RH REQ. -2	LH REQ. -3	RH REQ. -4	LH REQ. -5	RH REQ.
#502	DZUS GROMMET			3	3				
*FA-56	DZUS FASTENER								
Q4303-D4									
-13	.032 x 3 x 7	ALCL. 24ST	47AB CONDT	1					
-12	.064 x 3 x 13 1/16	ALCL. 24ST	47AB CONDT	1					
-BR	.051 x 2 3/4 x 2 3/4	ALCL. 24ST	47AB CONDT	1					
-11	K1422 1/4 x 4 1/2	AL. ALLOY 53ST	46AB CONDT	1					
-10	.064 x 2 1/8 x 6 7/8	ALCL. 24ST	47AB CONDT	1					
-9	K1422 1/4 x 4 1/2	AL. ALLOY 53ST	46AB CONDT	1					
-BL	.051 x 2 3/8 x 2 3/4	ALCL. 24ST	47AB CONDT	1					
-7	Y56A12T X 16			1					
-6	.032 x 1 5/8 x 10 3/8	ALCL. 24ST	47AB CONDT	1					

PARTS LIST PER ASSY.

A C		12-22-39
NAVY NONE	Z-P-2A1	12-23-39
HEAT TREAT	FINISH	DRAFT

MAC DONALD — CHECK — STRUCT. — MAT. — APPROV. — ENG.

NAME DOOR ASSEM. NACELLE COWL BOTTOM

OPP. HAND

CONSOLIDATED AIRCRAFT CORP. SAN DIEGO, CALIF.

DWG. SIZE D — 28D5018

LET	ALTERATION	DATE	BY

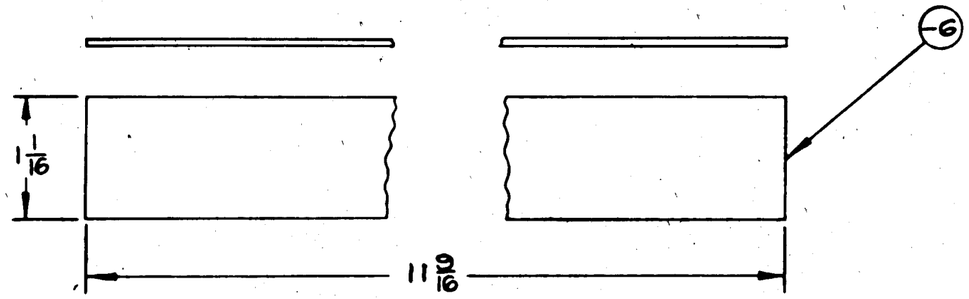

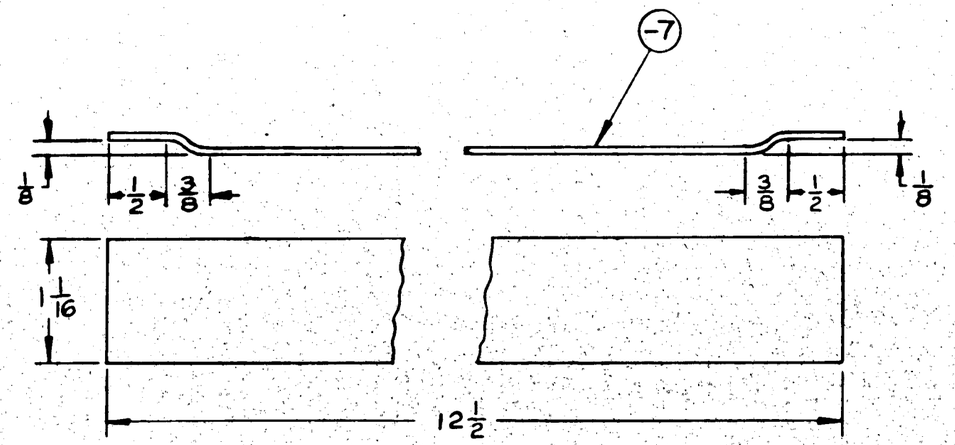

NOTE:

1. SEE RELEASE SHEET FOR REQ'TS. FOR PBY-5B, 28-5MA, 28-5ME, 28-5MC, 28-5MN, 28-5AMC, & 28-5AMN. (FOR SPARES & REPLACEMENT ONLY.)

ASSY. DASH NO.	MODEL	NEXT ASSY.	REQ.
SEE NOTE	#1		
-7	PBY-5A	32D022	16
-6	PBY-5A	32D022	6
-7	PBY-5A	32D021	12
-6	PBY-5A	32D021	6
-7	PBY-5	32D022	16
-6	PBY-5	32D022	6
-7	PBY-5	32D021	12
-6	PBY-5	32D021	6

REQUIREMENTS PER AIRPLANE

REPLACES — CALC. WT. .07

REPLACED BY — ACT. WT.

UNLESS OTHERWISE SPECIFIED: ± 1/32

SCALE: 12" = 1'-0"

STAMP PART NUMBER WHERE SHOWN

PART No.	STOCK	MATERIAL	SPEC.	LH REQ. -0	RH REQ. -0	LH REQ. -2	RH REQ. -2	LH REQ. -3	RH REQ. -3	LH REQ. -4	RH REQ. -4	LH REQ. -5	RH REQ. -5
-7	.051 X 1 3/16 X 19	ALC. 24ST	QQ-A-362 COND. III										
-6	.051 X 1 3/16 X 11 3/16	ALC. 24ST	QQ-A-362 COND. III										

PARTS LIST PER ASSY.

AC		Pollett	
NAVY ———	P-2GP	6-24-42	
HEAT TREAT	FINISH	DRAFT	CHECK / STRUCT / MAT / APPROV / ENG.

NAME: PLATE-ENGINE COWLING

OPP. HAND: NONE

CONSOLIDATED VULTEE AIRCRAFT CORP. — SAN DIEGO DIVISION . . . SAN DIEGO, CALIF.

DWG. SIZE: D — 28D5056

R

28D5056

LET	ALTERATION	DATE	BY

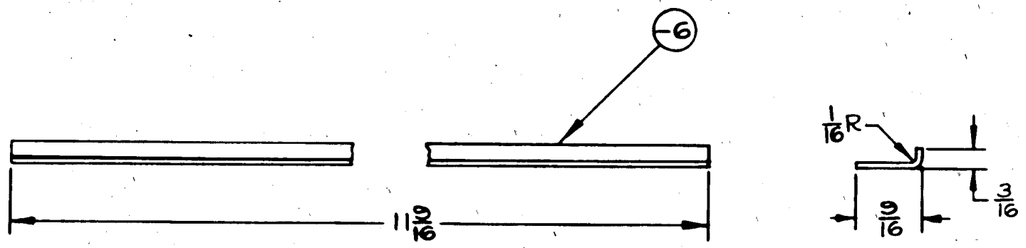

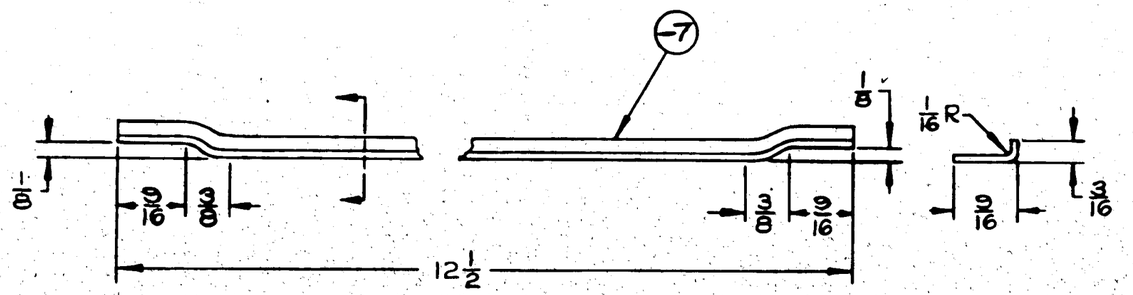

NOTES-

1. SEE RELEASE SHEET FOR REQ'TS. FOR PBY-5B, 28-5MA, 28-5ME, 28-5MC, 28-5MN, 28-5AMC & 28-5AMN. (FOR SPARES & REPLACEMENT ONLY.)

ASSY. DASH No.	MODEL	NEXT ASSY.	REQ.
SEE NOTE #1.			
-7	PBY-5A	32D022	16
-6	PBY-5A	32D022	6
-7	PBY-5A	32D021	12
-6	PBY-5A	32D021	6
-7	PBY-5	32D022	16
-6	PBY-5	32D022	6
-7	PBY-5	32D021	12
-6	PBY-5	32D021	6

REQUIREMENTS PER AIRPLANE

REPLACES — .065 CALC. WT.

REPLACED BY — ACT. WT.

UNLESS OTHERWISE SPECIFIED DIMENSIONS ± 1/32 — SCALE 12" = 1'-0"

STAMP PART NUMBER WHERE SHOWN

PART No.	STOCK	MATERIAL	SPEC.	LH REQ. -0	RH REQ. -2	LH REQ. -3	RH REQ. -4	LH REQ. -5	RH REQ.
-7	.064 X 13/16 X 13	ALC. 24ST	QQ-A-362 COND.T						
-6	.064 X 13/16 X 11 3/4	ALC. 24ST	QQ-A-362 COND.T						

PARTS LIST PER ASSY.

AC		Pollett
NAVY ——	P-2GP	6-24-43
HEAT TREAT	FINISH	DRAFT

CHECK | STRUCT | MAT | APPROV | ENG.

NAME ANGLE - ENGINE COWLING

OPP. HAND NONE

CONSOLIDATED VULTEE AIRCRAFT CORP. WF SAN DIEGO DIVISION . . SAN DIEGO, CALIF.

DWG. D SIZE 28D5057

28D5057 R

LET	ALTERATION	DATE	BY
S	REDRAWN	1-8 42	THORSEN
T	REMOVE DETAIL HINGE NOTCHES (-7 FOR -0L ASSY WAS -7L FOR -0L & R ASSY) (-7L FOR -0R & -2L ASSY WAS -7L FOR -0L & R ASSY) (-7R FOR -0L & -2R WAS -7R "OPP" FOR -2R) (CHG B/M) & ADDED (-2 ASS'Y VIEW)		
	WT CHG NEG	8-17-42	SWANBERLY
U	DIM. I WAS 1" FOR -0 ASS'Y, 1 1/8 FOR -2 ASS'Y REMOVED 1/16 JOGGLE & 1 3/8 FLAT		
	DIM. WT. CHG. NEG.	9-29-42	MOSS
V	REMOVED 32D059-2 & ADDED 32D059-3 TO -2 ASS'Y WT CHG NEG	3-1-43	Foster
W	1 WAS 1 1/8, 1 1/4 WAS 1 5/16, R'MV'D 7/8 1 1/16 ADDED / 3/8 3/8 WAS 1/4, 1/4 WAS 1/8 .064 X 3 1/8 X 15 WAS .032 X 3 1/8 X 18 1/8 ADDED DIM 5 17/32, 10 7/8, 1/4, 1 1/16 & 10 7/8 WT CHG NEG.	3-11-43	Foster

ROHR E.O. 601

E.O. A48606

E.O. A64677

E.O. A64714

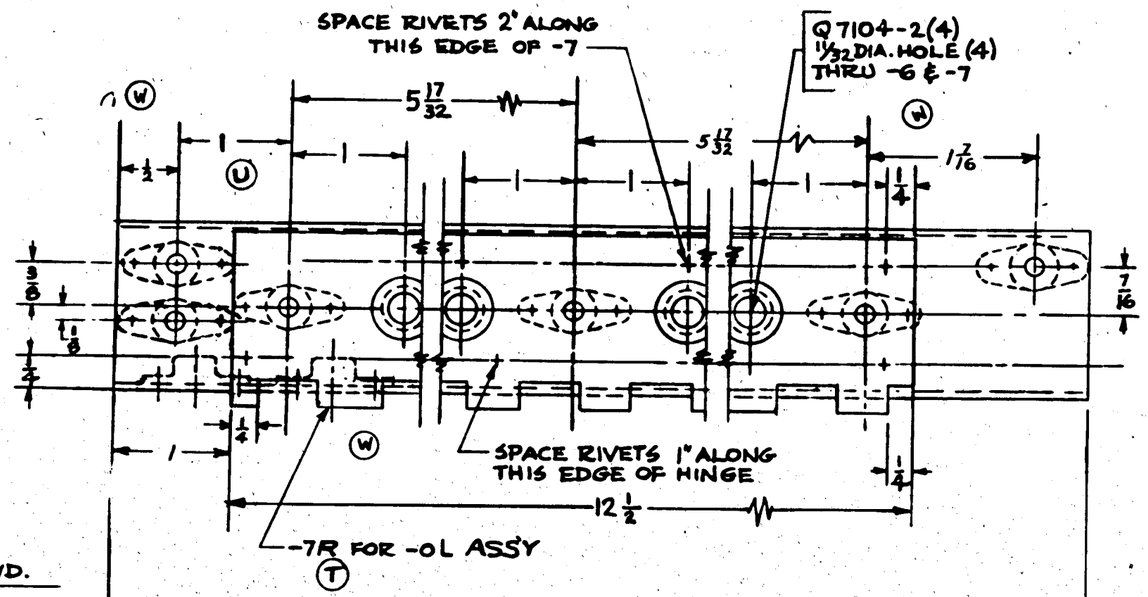

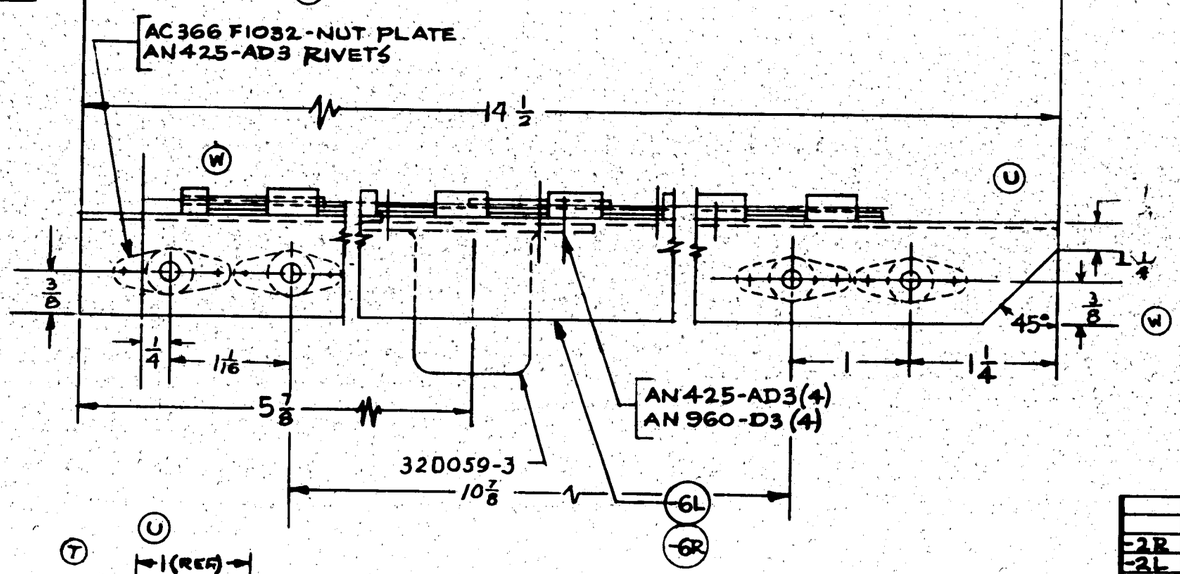

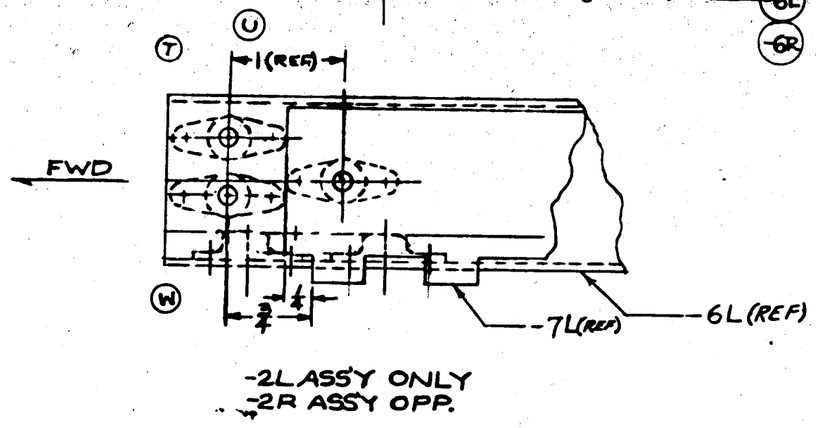

-2L ASS'Y ONLY
-2R ASS'Y OPP.

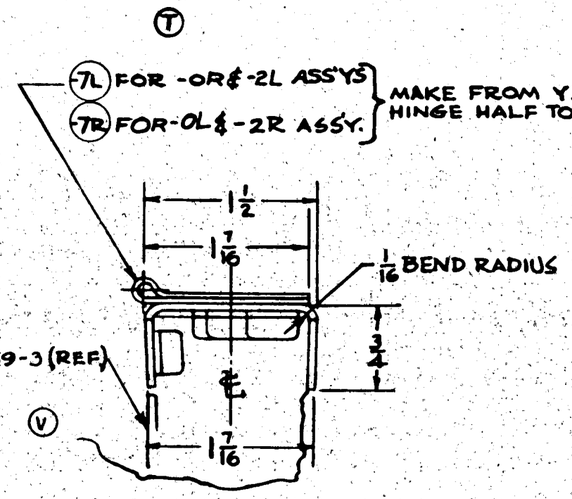

-2R	28-5MC4MN	28D5000	2																		
-2L	28-5MC4MN	28D5000	2																		
-2R	28-5MC4MN	28D5000	2	Q7104-2	PAD			4	4	4	4										
-2L	28-5MC4MN	28D5000	2	Q4303-AD4																	
-2R	28-5MA4MC	28D5000	2	Q4303-AD3																	
-2L	28-5MA4MC	28D5000	2	AN960-D3	WASHER			4	4	4	4										
-2R	PBY-5, 5A, 5B	28D5000	2	AN425-AD3																	
-2L	PBY-5, 5A, 5B	28D5000	2	AC366F1032	NUT PLATE			10	10	10	10										
-0L	2B24, B24, 24A	32D002	4																		
-0R	"	32D002	4																		
-2L	"	32D002	4	32D059-3	PAD ASSY.			1	1	1	1										
-2R	2B24, B24, 24A	32D002	4																		
ASSY. DASH NO.	MODEL	NEXT ASSY.	REQ.																		
REQUIREMENTS PER AIRPLANE				-7R	Y56-A24T x 12 5/8			1			1										
REPLACES 32D019 OF 7-27-39		.67 CALC. WT.		-7L	Y56-A24T x 12 5/8				1	1											
REPLACED BY		ACT. WT.		-6R	.064 x 3 1/8 x 15	AL CL. 24S0	11067-I		1		1										
UNLESS OTHERWISE SPECIFIED DIMENSIONS ARE ± 1/32		SCALE 12" = 1'0"		-6L	.064 x 3 1/8 x 15	AL CL. 24S0	11067-I	1		1											
STAMP PART NUMBER WHERE SHOWN				PART NO.	STOCK	MATERIAL	SPEC.	LH REQ.	RH REQ.	LH REQ.	RH REQ.	LH REQ.	RH REQ.	LH REQ.	RH REQ.	LH REQ.	RH REQ.				
				PARTS LIST PER ASSY.				-0		-2		-3		-4		-5					

A C	C.A.C. ZF-32-001	7-27-39	MACDONALD		G.F.
NAVY		MIRELLA	7-28-39	E.H.W.	A.V.H.
HEAT TREAT	FINISH	DRAFT	CHECK	STRUCT	MAT	APPROV	ENG.

NAME SUPPORT ASSEMBLY ENGINE COWL PANEL

CONSOLIDATED AIRCRAFT CORP. SAN DIEGO, CALIF.

OPP. HAND 32D019-R

DWG. SIZE D

32D019

R

LET	ALTERATION	DATE	BY
P	TRACED TO DATE	6-2-42	
Q	FELT, S.A.E. F-13" WAS "WESTERN FELT #40 OR EQUIV" WT. CHG NEG	11-5-42	
R	LIMITED PARTS FOR PBY-5A "UP TO MCR 319-1, REPLACED 32D055-11 WITH 32D055-23. NO WT. CHG.	12/4/43	

MCR 319-1

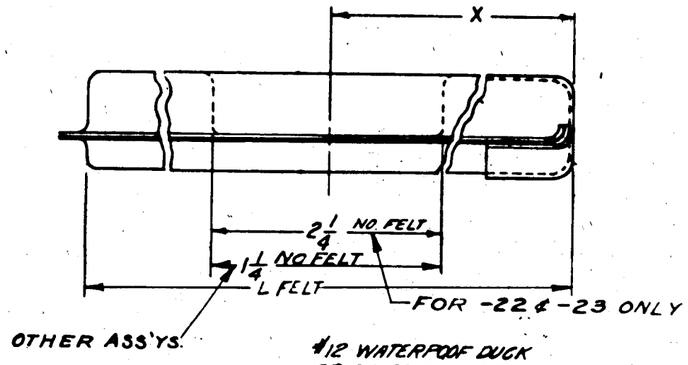

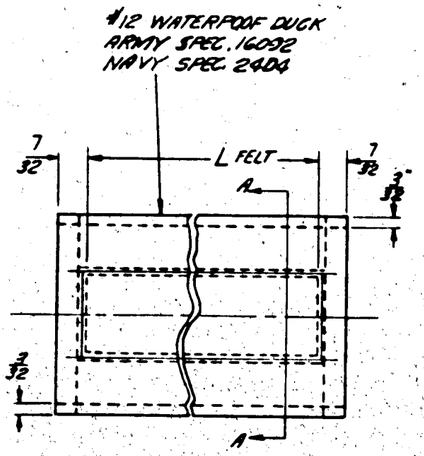

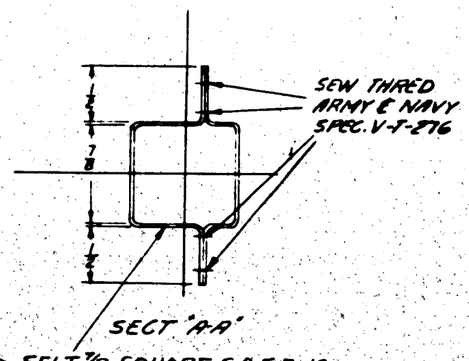

Ⓠ FELT 7/8 SQUARE, S.A.E. F-13, ARMY SPEC. 8-15, NAVY SPEC. 27F7, GR. A.

70496 & 91876

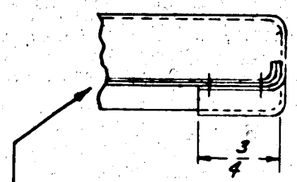

TURN ENDS OF FABRIC UNDER 3/4" AND SEW DOWN ON -6, -8, & -10 ON END ONLY

C-70496 & 91876 1-260

FOR FURTHER RELEASES SEE RELEASES

-6	LB 30	32D021	4
-6	B24 B24A	32D021	AR
-12	PBY5-28SME	32D021-2L & 32D022-2R	1 / 1
-11	-28SME	32D022-2L	1
-10	PBY5-28SME	32D022-2L & 32D021-2R	1 / 1
-9	PBY5-28SME	32D021-2L & 32D022-2R	1 / 1
-8	PBY5-28SME	32D021-2L	1
-7	PBY5-28SME	32D022-2L & 32D021-2R	1 / 1
-12	B24 LB30 B24A	32D021	AR
-7	B24 LB30 B24A	32D022	AR
-8	B24 LB30 B24A	32D021	AR
-9	B24 LB30 B24A	32D021	AR
-10	B24 LB30 B24A	32D022	AR
-11	LB30	32D022	4
-2	B24 LB30 B24A	32D021	AR
-506	B24-B24A	32D021 & 32D022	4
-505	B24-B24A	32D022	AR
-10	PBY-5	32D022-2L	AR
-24	B24-B24A	32D021	AR
-47	B24-B24A	32D022	AR
-24	PBY-5	32D021-2L	AR
-47	PBY-5	32D022-2L	1
-21	PBY-5	32D022-2R	1
-14	PBY-5	32D022-2R	1
-13	PBY-5	32D021-2R	1
-6	PBY-5	32D022-2R	1
-23	PBY-5	32D022-2R	2
-22	PBY-5	32D021-2R	1
-21	PBY-5	32D022-2L	1
-14	PBY-5	32D022-2L	1
-13	PBY-5	32D021-2L	1
-12	PBY-5	32D021-2L & 32D022-2R	1 / 1
-21	B24, B24A	32D022	4
-14	B24, B24A	32D022	4
-13	B24, B24A	32D021	4
-12	B24, B24A	32D021	4
-11	-28-5ME	32D022-2L	1
-10	28-5ME	32D022-2L & 32D021-2R	1 / 1
-9	PBY-5 28-5ME	32D021-2L & 32D022-2R	1 / 1
-8	PBY-5 28-5ME	32D021-2L	1
-7	PBY-5 28-5ME	32D022-2L & 32D021-2R	1 / 1
-6	PBY 5	32D022-2L	1
-6	PBY 5	32D021	2
-11	B24	32D022	4
-10	B24 LB30 B24A	32D022	AR
-9	B24 LB30 B24A	32D021	AR
-8	B24 LB30 B24A	32D021	AR
-7	B24 LB30 B24A	32D022	AR
-6	B24	32D022	4
-6	B24	32D021	4

ASSY. DASH NO.	MODEL	NEXT ASSY.	REQ.

REQUIREMENTS PER AIRPLANE

REPLACED 32D065 OF 12-16-42 B & S — CALC. WT.

REPLACED BY — ASY. WT.

SCALE 18" = 1'0"

STAMP PART NUMBER WHERE SHOWN

-506	-508	-510	10 1/2								
-505	-507	-509	18								
-24	-45	-46	4								
-47	-48	-49	15 1/2								
-23	-42	-44	18 1/2	2 3/8							
32D055-22	-39	-40	-43	15 3/4	2 3/8						
-21	-34	-38	6 1/2								
-14	-33	-37	3 1/2								
-13	-32	-36	2 1/4								
-12	-31	-35	11 3/4								
-11	-20	-30	18 1/2								
-10	-19	-29	28								
-9	-18	-28	22 1/2								
-8	-17	-27	15 3/4								
-7	-16	-26	10 1/2								
32D055-6	-15	-25	10								
ASSEMBLY	FELT	COVER	"L"	"X"							

-6	NOTED	NOTED	NOTED								
PART No.	STOCK	MATERIAL	SPEC.	LH REQ.	RH REQ.	LH REQ.	RH REQ.	LH REQ.	RH REQ.	LH REQ.	RH REQ.
PARTS LIST PER ASSY.				-0		-2		-3		-4	-5

AC NONE		12-6-42	PULLED			FINAL
NAVY NONE		12-6-42	CHECKED			
HEAT TREAT	FINISH	DRAFT	CHECK	STRUCT.	MAT	APPROV. ENG.

NAME PAD ASSEM. ENGINE WRAP COWL

CONSOLIDATED AIRCRAFT CORP. San Diego, Calif.

OPP. HAND —

SIZE D — DWG. NO. 32D055

UP TO MCR 319-1	-47	PBY-5A	32D022	2
UP TO MCR 319-1	-23	PBY-5A	32D022	2
UP TO MCR 319-1	-10	PBY-5A	32D022	2
UP TO MCR 319-1	-21	PBY-5A	32D022	2
UP TO MCR 319-1	-14	PBY-5A	32D022	2
C-13595 UP TO MCR 319-1	-22	PBY-5A	32D021	2
UP TO MCR 319-1	-7	PBY-5A	32D022	2
UP TO MCR 319-1	-6	PBY-5A	32D022	2
UP TO MCR 319-1	-24	PBY-5A	32D021	2
70496, 77718 & 88476 OBSC.	-22	PBY-5A	32D021	1
	-6	PBY-5A	32D021	1
UP TO MCR 319-1	-13	PBY-5A	32D021	2
UP TO MCR 319-1	-12	PBY-5A	32D021	2
UP TO MCR 319-1	-9	PBY-5A	32D021	2
UP TO MCR 319-1	-6	PBY-5A	32D021	2
	ASSY. DASH NO.	MODEL	NEXT ASSY.	REQ.

LET	ALTERATION	DATE	BY
A	CHANGED V8 TO 4 FELT	4-8-41	[illegible]
B	CHGD FELT FROM 1/4 DIM TO 1/2	7-21-41	[illegible]
C	CHG'D FELT FROM 1/2 TO 1/4	10-22-41	[illegible]
D	ADDED NOTE & SECT. B-B	10-22-41	[illegible]
E-N	ADDED DIM. 6 5/16 & CHANGED DIMS ACCORDINGLY	7-16-42	[illegible]
F	MATERIAL FOR -7 "FELT S.A.E. F-13"		
	WAS "#40 WESTERN FELT" WT. CHG. NEG.	11-9-42	MOLL

20792

E.O. 26601
E.O. 27224
Proj. P.O. 223
LB-30

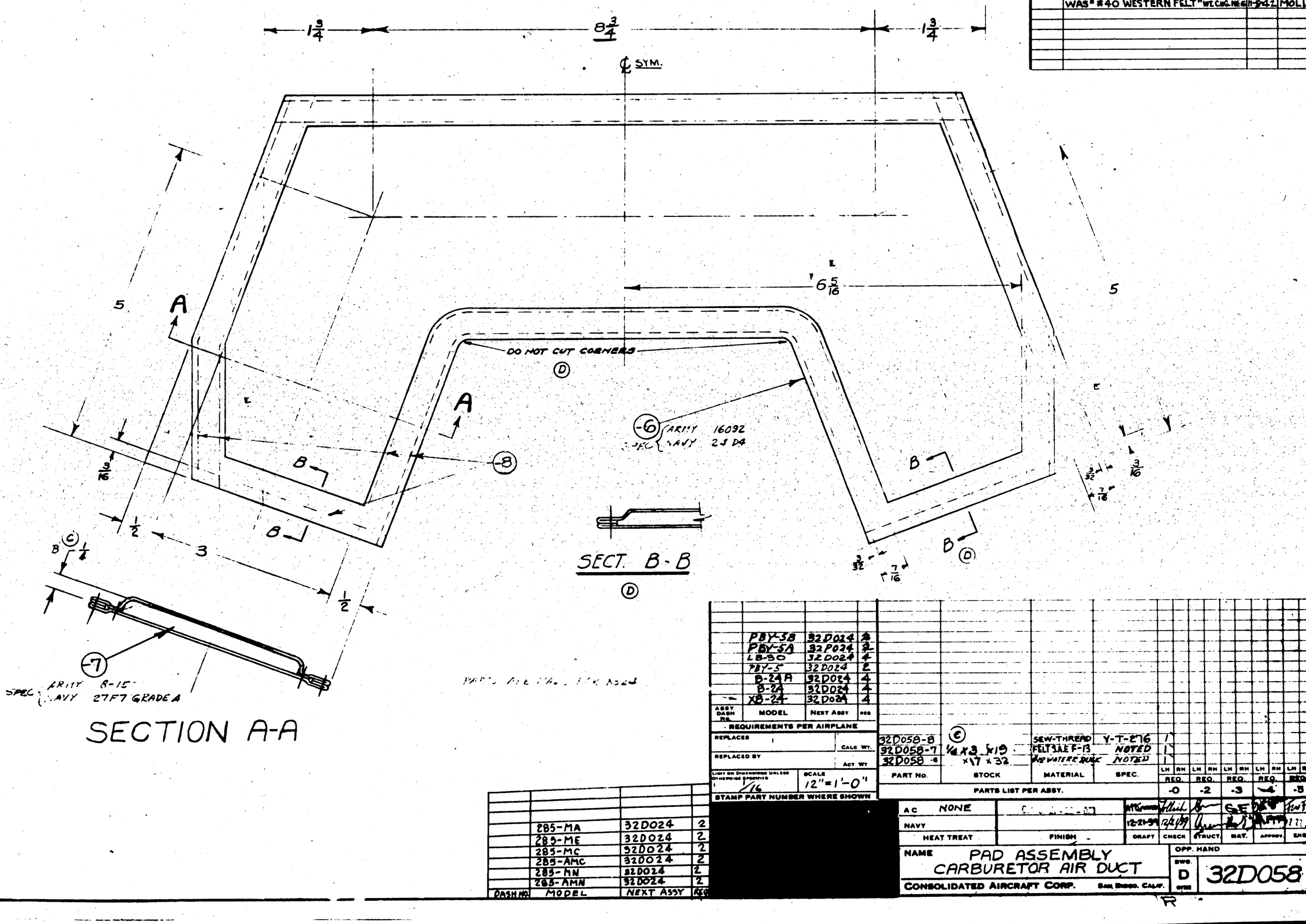

SECTION A-A

ASSY DASH NO.	MODEL	NEXT ASSY	REQ
	PBY-3B	32D024	2
	PBY-5A	32P024	2
	LB-30	32D024	4
	PBY-5	32D024	2
	B-24A	32D024	4
	B-24	32D024	4
	XB-24	32D024	4

- REQUIREMENTS PER AIRPLANE

REPLACES — CALC WT.

REPLACED BY — ACT WT.

LIGHT ON DRAWINGS UNLESS OTHERWISE SPECIFIED 1/16 — SCALE 12" = 1'-0"

STAMP PART NUMBER WHERE SHOWN

DASH NO.	MODEL	NEXT ASSY	REQ
	285-MA	32D024	2
	285-ME	32D024	2
	285-MC	32D024	2
	285-AMC	32D024	2
	285-MN	32D024	2
	285-AMN	32D024	2

PART NO.	STOCK	MATERIAL	SPEC.	LH REQ.	RH REQ.	LH REQ.	RH REQ.	LH REQ.	RH REQ.	LH REQ.	RH REQ.	LH REQ.	RH REQ.
PARTS LIST PER ASSY.				-0		-2		-3		-4		-5	
32D058-8	(E) 1/16 X 3 X 19	SEW-THREAD	Y-T-276	1									
32D058-7	X 17 X 32	FELT S.A.E. F-13	NOTED			1		1					
32D058-6		AIR WATER DUCK	NOTED							1		1	

AC NONE — NAVY — HEAT TREAT — FINISH

DRAFT 12-21-39 — CHECK 12/21/39 — STRUCT. — MAT. — APPROV. — ENG.

NAME PAD ASSEMBLY CARBURETOR AIR DUCT

OPP. HAND

CONSOLIDATED AIRCRAFT CORP. SAN DIEGO, CALIF.

DWG. D — SIZE — 32D058

R

LET	ALTERATION	DATE	BY
	MCR 319-1		
N	IN REQ/AIR BLK LIMITED -24 UP TO MCR 319-1 FOR PBY-5A. NO WT. CHG.	2/9/37	DUNEGUER

LET	ALTERATION	DATE	BY
A	[illegible]	1-5-40	[illegible]
	REMOVED [illegible] FROM		
	PART NOTE		
B	[illegible]		
	[illegible]		
	[illegible]		
	[illegible]		
	[illegible]		
C	[illegible]		
	ON -2 ASSY 2" DIM WAS [illegible]		
	1/8 & 1/4 DIMS WERE 1/2		
D	MADE -3 RECT. WAS [illegible]		
	[illegible]		
	[illegible]		
	FOR B24 & B24A REMOVED -2 RECTS		
	FOR PBY-5		
E	[illegible]	11-25-40	[illegible]
	-3 - B24-B24A = 32D022-[illegible]		
	-2 - [illegible] = 28D5500-[illegible]		
F	[illegible]		

LET	ALTERATION	DATE	BY
G	[illegible]		
H	[illegible]		
	[illegible]		
	[illegible]		
	[illegible]		
	[illegible]		
K	REV REQTS / AIRPLANE. NO WT CHG	8-18-42	[illegible]
L	[illegible]		
M	MAT'L FOR -10, -13, & -19 FELT. SAE F13 WAS "FELT, WESTERN #40 OR EQUIV" WT CHG NEG	11-42	DUNLEVY

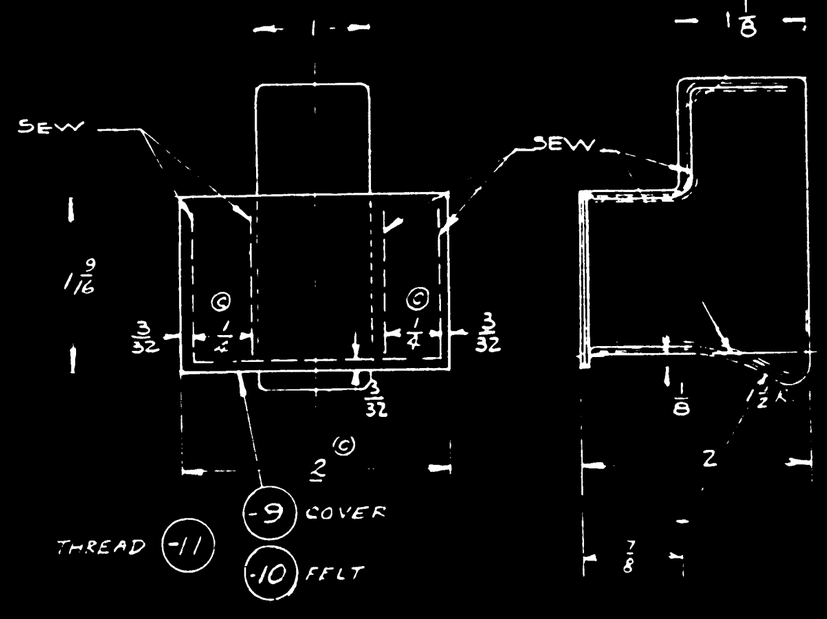

32D059-2 ASSEM

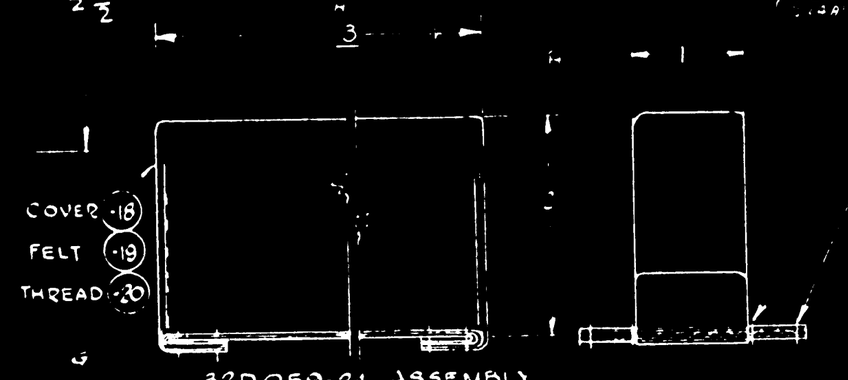

32D059-24 ASSEMBLY
SIMILAR TO -0 ASSLY EXCEPT AS SHOWN

NOTE:
(A) FELT
(M) SAE F-13
ARMY SPEC. 8-15
NAVY " 27F7

#12 WATERPROOF DUCK
ARMY SPEC. 16092
NAVY " 24D4

SEW THREAD
ARMY & NAVY SPEC. V-T-276

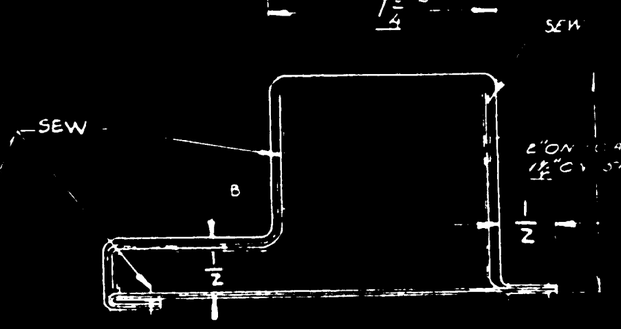

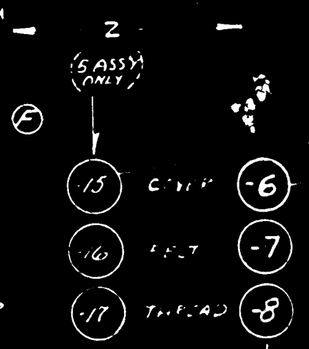

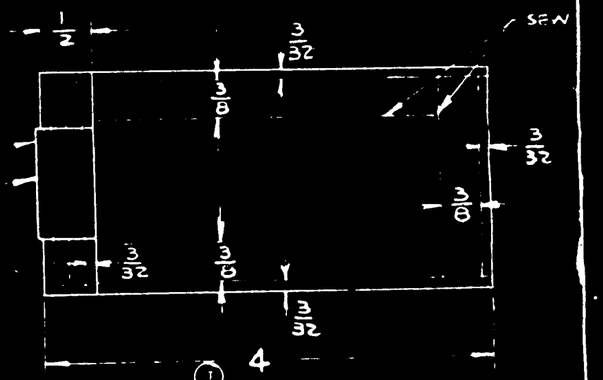

3-[illegible] OF SASSY

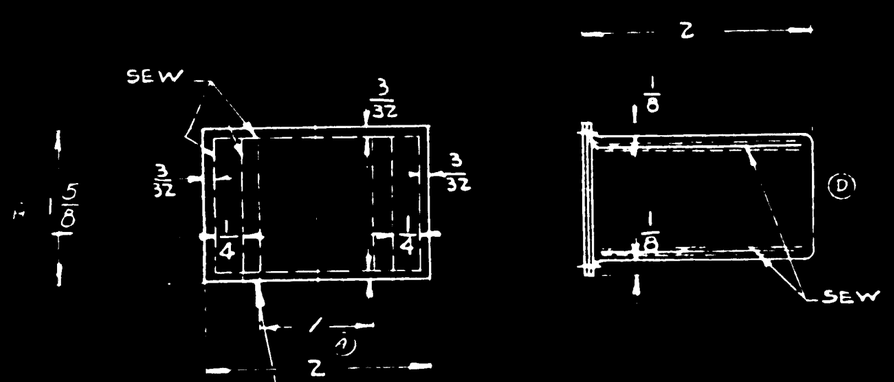

32D059-3 ASSEM

PARTS ARE INSTALLED ON B24 -
B24A #1 - #28

UP TO MCR 319-1 FOR PBY-5A
UP TO MCR 319-1 FOR PBY-5A

(*) FOR FURTHER RELEASES SEE RELEASE SHEETS

-3	LB30	32D019	8
-24	LB30	32D022	4
-24	LB30	32D021	4
-3	XB24-B24-B24A	32D021	2
-3	XB24-B24-B24A	32D022	2
-3	[illegible]	32D019-2[illegible]	[illegible]
-24	[illegible]	32D022	24
-24	[illegible]	32D021	24
-3	B24-B24A	32D019LER	8
-3	XB24	32D019	9
-0	B24-B24A	32D022	24
-0	B24-B24A	32D021	24
-0	XB24	32D022	2
-0	XB24	32D021	2
ASSY LASH	MODEL	NEXT ASSY	QTY

REQUIREMENTS PER AIRPLANE

REPLACES — CALC WT
REPLACED BY — ACT WT
SCALE 12"=1'-0
STAMP PART NUMBER WHERE SHOWN

PART NO.	NOTED STOCK	NOTED MATERIAL	NOTED SPEC	HRD	HRD	HRD
-20	NOTED	NOTED	NOTED			
-19						
-18						
-17						
-10						
-5						
-4						
-3						
-2						
-11						
-1						
-9						
-8						
-7						

PARTS LIST PER ASSY -0 -2 -3 -5 -21

NOTE: ALL DIMENSIONS ARE APPROX. SET FOR [illegible] TO FACE. [illegible] MAKE [illegible] B

ENG. FILE

C.A.C. 2F-32-001

C.A.C. 2F-32-001

NAME PAD ASSEM. ENG COWL AIR SEAL

CONSOLIDATED AIRCRAFT CORP SAN DIEGO CALIF.

SIZE D 32D059

32D059

INCORPORATES
PBY-1 BU. AER. CHG. NO. 96
PBY-2 " " " " 68
PBY-3 " " " " 47

C.O. 7353A

SUPPLIES & EQUIPMENT CLASSIFICATION			
LET	ALTERATION	DATE	BY
✓	TRACED UP TO DATE	9-22-37	THOMAS
K	5/16 WAS 1/4 FOR THREAD DEPTH IN -3	1-25-38	HARRIS
	ADDED PBY-4 PARTS	1-25-38	HARRIS
L	REPLACED AN935-6 & AN935-10 (EA.) WITH #1106 & #1110 SHAKE-PROOF. REMOVED THREADED (6-32) PORTION OF -5, ADDED DRILL & TAP 6-32, 4 3/16 DIM.		
	WAS 4 7/16. ADDED: AN515-6-7 (1)	6-17-38	J.A. PHILLIPS
M	.249 +.000 -.005 WAS 1/4	12-9-41	GRAY
N	MATR'L FOR -2, 1/2 X .049 25S M.H. ALUM. TUBE, SPEC. WW-T-783, WAS 1/2 X .065 AL. AL.		
	TUBE, SPEC. 44T21, COMB. HT. CHEM. MILL	7-3-42	WILHELM

AN430D5

AN430D2

A — A

11/16

3 5/8

17/64

5/16

1/4

15/16

1 15/16

6

50°

FAFNIR BEARING SIK5 *
STAKE 3 PLACES EACH SIDE

22P066-2
FIN. ZP2GP EXCEPT
GROOVE & HOLES

(REF) 1/8

.249 +.000 -.005 (M)

TAP 6-32 NC2

BREAK CORNERS

7/64

9/16

DETAIL OF -6
C.M. STEEL : SPEC. 47S14
FIN. C

NOTE:
-5 MUST BE SECURELY ATTACHED TO -3 BEFORE ASSEMBLING -2, -4, & -6

(L) * 1110 SHAKE-PROOF (1)

5/16

7/16

3/8

21/32

1/8

29/64 DIA.

Q612D8-2
DRIVE INTO RIVETS

AN515-6-7

#1106 SHAKE-PROOF (1)

(L)

1 1/4

(6) SEE DETAIL

SECTION A-A
SCALE 1"=1'-0"

(K) DRILL & TAP #10-32 NC2 7/16 DEEP

(4) SPRING - .093 MUSIC WIRE 3/32 I.D. x 2" LONG (FREE LENGTH) 16 COILS ENDS WOUND CLOSE & GROUND FLAT. (SPEC. 22W11)

(2) 1/2 x .049 25 H.H. ALUM. TUBE SPEC. W.W.-T-783 FIN. ZP2GP

(N)

(3) TURN FROM 1" BAR AL. ALLOY 17S SPEC. 46-A-4 COND. T FIN - ZP-28KL

(5) SEE DETAIL

TWD. #10-32 NC2 CHAMFER TO DEPTH OF TWD. RELIEVE BOTTOM TWD.

4 3/16

3 1/4

1/4

11/16

3/8

DRILL AND TAP #632

5/16 HEX. STOCK SIZE

1/32 R

1/4 DIA.

(L)

DETAIL OF -5
MAKE FROM 5/16 HEX. BAR 17ST ALUM. ALLOY COND'T
SPEC 46AA FINISH - Z

FINISH CODE	
GP	- GREEN PRIME
Z	- ANODIC TREATMENT
P	- P-27 PRIMER
AP	- ALUMINIZED PRIMER
C	- CADMIUM PLATE

-4	PBY-5B	28C9066	1	CONTR. 70400 #1-88 91676
	PBY-5	28E124	1	
	PBY-5A	28E124	1	CONTR 70406 77718 #1-82 88476
	28-5MA	28E124	1	
	28-5MC	28E124	1	
	28-5ME	28E124	1	
	28-5MN	28E124	1	
-4	PBY-5&5A	28C4066	1 EA.	
	28-5AMC	28E124	1	
-4	28-5ALL	28C4066	1 EA.	
	PBY-4	28E124	1	
	PBY-3	28E124	1	
	PBY-2	28E124	1	
	PBY-1	28E124	1	
	XPBY-1	28E124	1	

INCORP. BUR. CHG. PBY-1
PBY-2
PBY-3

O.H.	MODEL	NEXT ASSY.	REQ.	ST'D PARTS	LH REQ	RH REQ	PART NO.	LH REQ	RH REQ
	PBY-4	28E124	1	AN515-6-7	1		-6	1	
	PBY-3	28E124	1	#1110	1		-5	1	
	PBY-2	28E124	1	#1106 SHAKE-PROOF	1		-4	1	
	PBY-1	28E124	1	AN430D8	2		-3	1	
	XPBY-1	28E124	1	AN430D5	2		28E122-2	1	
							Q612D8-2	1	
							22P066-2	1	
							FAFNIR SIK5	1	

* PROCURABLE FROM THE FAFNIR BEARING CO. NEW BRITAIN, CONN.

REPLACES 28E122 of 1-16-36	APPROVED [redacted]	2-18-86 DATE	
REPLACED BY	CALC. WT. .44	ACT. WT.	
LIMIT ON DIMENSIONS UNLESS OTHERWISE SPECIFIED ± .010	SCALE 12"=1'-0"		
[redacted]	AC		
	NAVY NOTED		
	MATERIAL		

CONSOLIDATED AIRCRAFT CORP. BUFFALO, N.Y.

STAMP PT. No. WHERE SHOWN

REQUIREMENTS PER AIRPLANE			PARTS LIST PER ASSY.			
			A.H.W.	[redacted]	NAC	
NOTED	NONE	NOTED	8-14-36	8-21-36	9-17-36	
SPEC.	HEAT TREAT	FINISH	DRAFT	CHECK	EXAM.	ENG.

NAME
HANDLE ASSEM. - ELEC. - FLOAT SWITCH CONTROL

OPP. HAND

DWG. SIZE D

28E122

R

28E122

LET	ALTERATION	DATE	BY

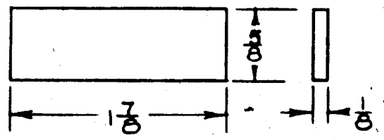

DETAIL -8

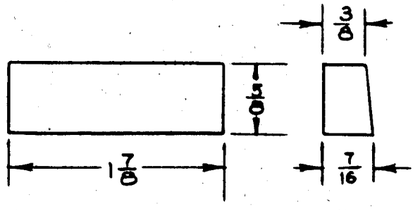

DETAIL -9

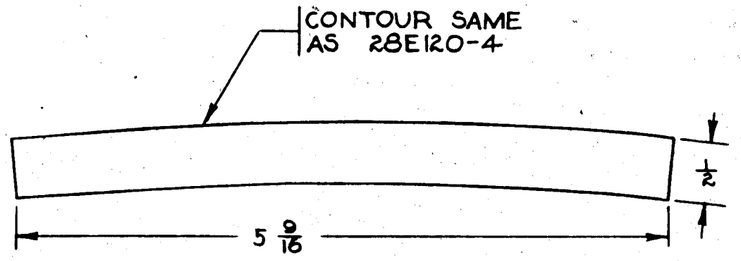

DETAIL -4

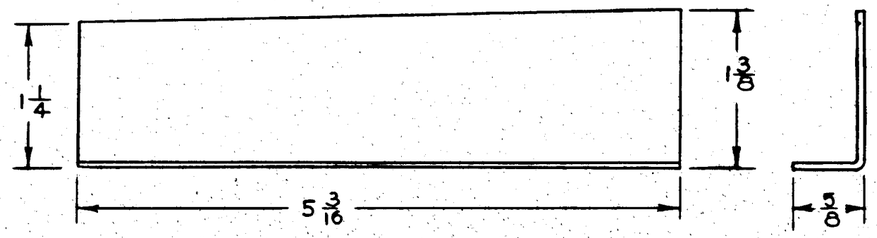

DETAIL -3

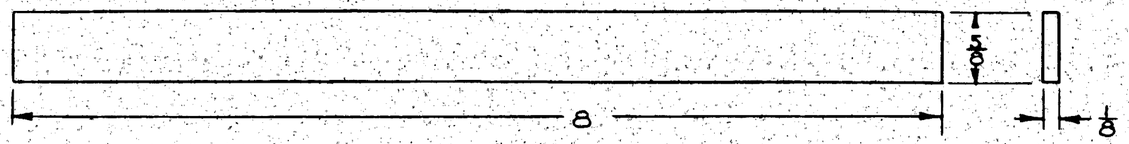

DETAIL -7

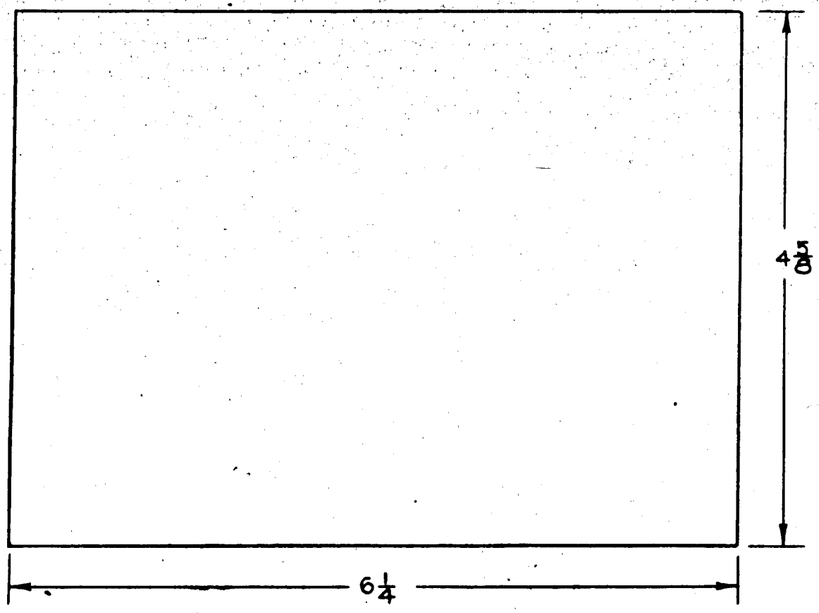

DETAIL -6

SEE SHEET #1 FOR B/M

ASSY. DASH No.	MODEL	NEXT ASSY.	REQ.
REQUIREMENTS PER AIRPLANE			
REPLACES		CALC. WT.	
REPLACED BY		ACT. WT.	
UNLESS OTHERWISE SPECIFIED ± .010	SCALE 12" = 1'-0"		
STAMP PART NUMBER WHERE SHOWN			

PART No.	STOCK	MATERIAL	SPEC.	LH REQ. -0	RH REQ. -2	LH REQ. -3	RH REQ. -4	LH REQ. -5	RH REQ.
PARTS LIST PER ASSY.									

A C		SAYLOR						
NAVY		5-20-43						
HEAT TREAT	FINISH	DRAFT	CHECK	STRUCT	MAT	APPROV	ENG.	

NAME INSTALL-ELEC-FLOAT SWITCH CONTROLS

OPP. HAND

CONSOLIDATED AIRCRAFT CORP. SAN DIEGO, CALIF.

DWG. SIZE D

28E124

SHEET 2 OF 2

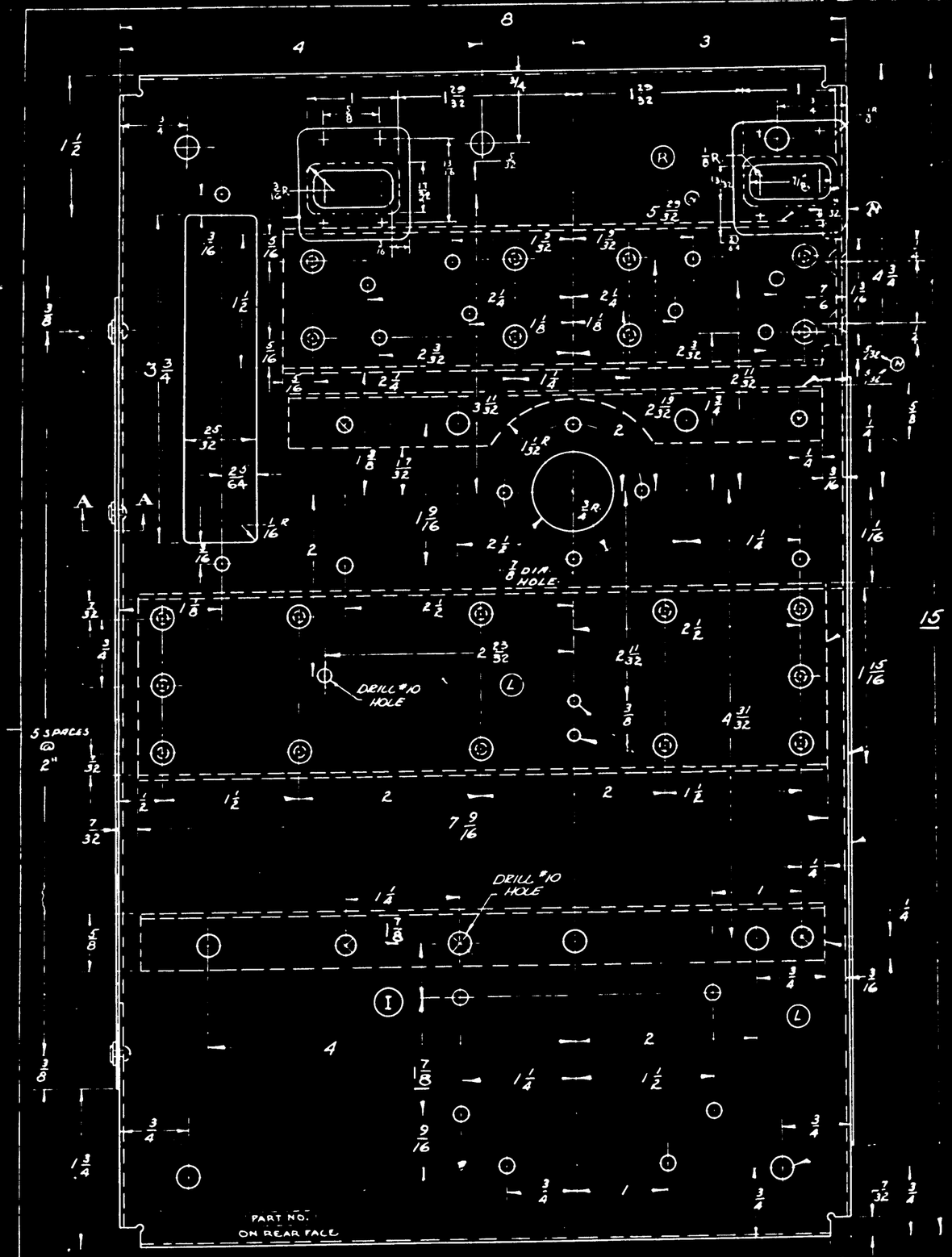

(-6) .064 SHEET ALUM ALLOY 2450
SPEC 47-A10 COND A HT SR 53
(K) RIVET AN425-D4
RIVET AN425-D3 · 2 REQ
C.SINK 82° × 11/64 DIA
BENDS 3/32 R

(-3) 5/8 × 1/2 × 1/16 ANGLE 5 7/8 LG 24ST
SPEC 46A9
ALCOA DIE #K-9876
2 HOLES SHOWN TO BE DRILLED THUR
ON ASS'Y AN425D4 CTSK 78° × 1/4 DIA

(-1) 1/16" SHEET LAMINATED PHENOLIC · 1 1/4 × 1 1/2 · (2RQD)
SPEC. 17-P-5 TYPE FBG
Q 4305-AD3 (8RQD)
(P) (Q) E.O.A18365

E.O.A18621A

NOTES:-
A. JIG DRILL ALL HOLES
B. ALL HOLES SHOWN THUS ⊗ TO BE DRILLED #10 (193)
C. ALL UNSPECIFIED HOLES ARE #18 (169)

(-5) .064 SHEET ALUM ALLOY 24ST
SPEC 47-A-10 COND T BENDS 1/8 R
(J) H.T. SR 53 COND T
(K) RIVET AN425-D4 12 REQ

(-4) .064 SHEET ALUM ALLOY 2450
SPEC. 47410 COND.A.
HT. SR-53 BEND RADIUS 5/32

DRILL "28 (140) 2 HOLES

(-7) 1/32 SHEET, LAMINATED PHENOLIC · 5/16 × 10 3/4, 2 REQ.
SPEC 17-P-5 TYPE. FBG
(P) RIVET AN442-D2 12 REQ.
WASHER AN960 D3 12 REQ

(-2) 5/8 × 1/2 × 1/16 ANGLE 7 1/2 LG 24S
SPEC. 46A9 COND.T.
ALCOA DIE #K-9876
4 HOLES SHOWN TO BE DRILLED THRU ON ASS'Y.
AN425 D4 CTSK. 78° × 1/4 DIA.

DRILL "F" (.257) 5 HOLES

C-70496
C-77713 SHIPS #1 THUR #52
C-88476

C-70496
C-91876 SHIPS #1 THRU #90

LET	ALTERATION	DATE	BY
H	TRACED UP TO DATE.	3-22-37	Rimson
I	ADDED: 1 7/8 DIM. & PBY-4 REQ. NEXT ASSEM. FOR PBY-2 & PBY-3 WAS 28E123	1-31-38	Phillips
		1-31-38	Phillips
J	-5 SPECIFIED 2450, COND. A & 1/16 R.	11/9/40	Mettler
K	-5 & -6 SPECIFIED AN430-D4	"	"
L	ADDED PBY-5, 5A, 28-5ME, MN, MC, MA, AMC — DAU-1 TO REQ. MAKE LENGTH LG 3 HOLES FROM -5 & 2 HOLES FROM -2. CH'GD DIM. 2 1/8 TO 2 29/32 ON -5. ADDED 1-#10 HOLE TO -2 & ADDED DETAIL SHOWING PBY-1 ASS'Y.		
M	ADDED -8 TO DWG. INCREASED 2 SLOTS TO 17/32 x 1" WAS 13/32 x 7/8 IN -4	DRAWING REC. 7-29-41	
V	5 29/32 WAS 5 31/32, 9/32 WAS 7/32, & 5/32 RELIEFS WERE DIM'D TO OUTSIDE OF BEND.	DIE GOLD	9/30/41
P	CHANGED AN 430-D2 TO AN442-D2	12-29-41	HERMAN DANIELS
	D2 & Q4301-DD4 TO Q4305-AD3	12-29-41	HERMAN DANIELS
Q	1/4 × 1 1/2 (?) WAS 1/4 × 1 1/16 (?), ADDED 1/16 (REF) DIM.		
	NEG. WT. CHG.	4-6-42	MELLICHAMP
R	2 3/4 WAS 11/32, 13/16 WAS 3/4. NEG WT CHG	4-6-42	MELLICHAMP

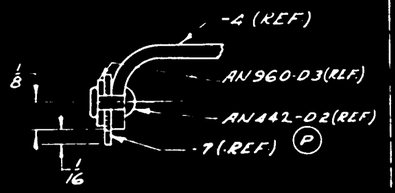

SECTION A-A
TWICE FULL SIZE
24" = 1 FOOT.

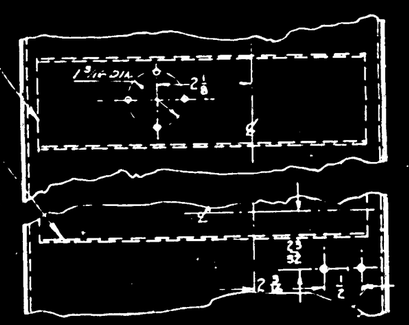

PBY-1 ASSEMBLY PANEL
SHOWING 5 REMOVED HOLES

FINISH CODE	
Z	ANODIC TREATMENT
P	P.27 PRIMER
AP	ALUMINIZED PRIMER
C	CADMIUM PLATE

28-5MN	28E203	1						
28-5ME		1						
28-5MC		1						
28-5MA		1						
28-5AMC		1						
PBY-5A		1					28E153-8	2
PBY-5		1	Q4305-AD3				28E153-7	2
PBY-4	28E2031	1	AN960D3	12			28E153-6	1
PBY-3	28E2031	1	AN442D2	12			28E153-5	1
PBY-2	28E2031	1	AN425D3				28E153-4	1
PBY-1	28E123	1					28E153-3	1
XPBY-1	28E123	1	AN425DA				28E153-2	1
O.H.	MODEL	NEXT ASSY.	REQ.	STD PARTS	LH REQ.	RH REQ.	PART NO	LH REQ.	RH REQ.

REQUIREMENTS PER AIRPLANE

PARTS LIST PER ASSY.

REPLACES
REPLACED BY
LIMIT ON DIMENSIONS UNLESS OTHERWISE SPECIFIED ± .010
APPROVED 2-7-36 DATE
.95 CALC AT ACT AT
SCALE NONE
AC NAVY NOTED MATERIAL
NOTED SPEC
NOTED HEAT TREAT
Z-P-2 FINISH
O.W.W. Anderson MILLER
AES-36 3-25-D.M.
DRAFT CHECK ENGR. ENG.
OFF HAND

CONSOLIDATED AIRCRAFT CORP. BUFFALO N.Y.
STAMP PT. NO. WHERE SHOWN

NAME PANEL ASSEM. ELEC. FLOAT SWITCH

DWG D SIZE 28E153.

LET	ALTERATION	DATE	BY
S	TRACED	6/22/43	ZAVALNY
T	REMOVED -8 ASSY. & NOTE		
	FROM -8: NOT USED ON -550		
	ASSY. NO. WT. CHG.	6/22/43	ZAVALNY
U	1 V8 WAS 1 V2. ADDED V8 R.		
	NO. WT. CHG.	6/23/43	ZAVALNY
V	9/16 WAS 1/2 - NO WT. CHG.	7/13/43	CLEMENT 7/13

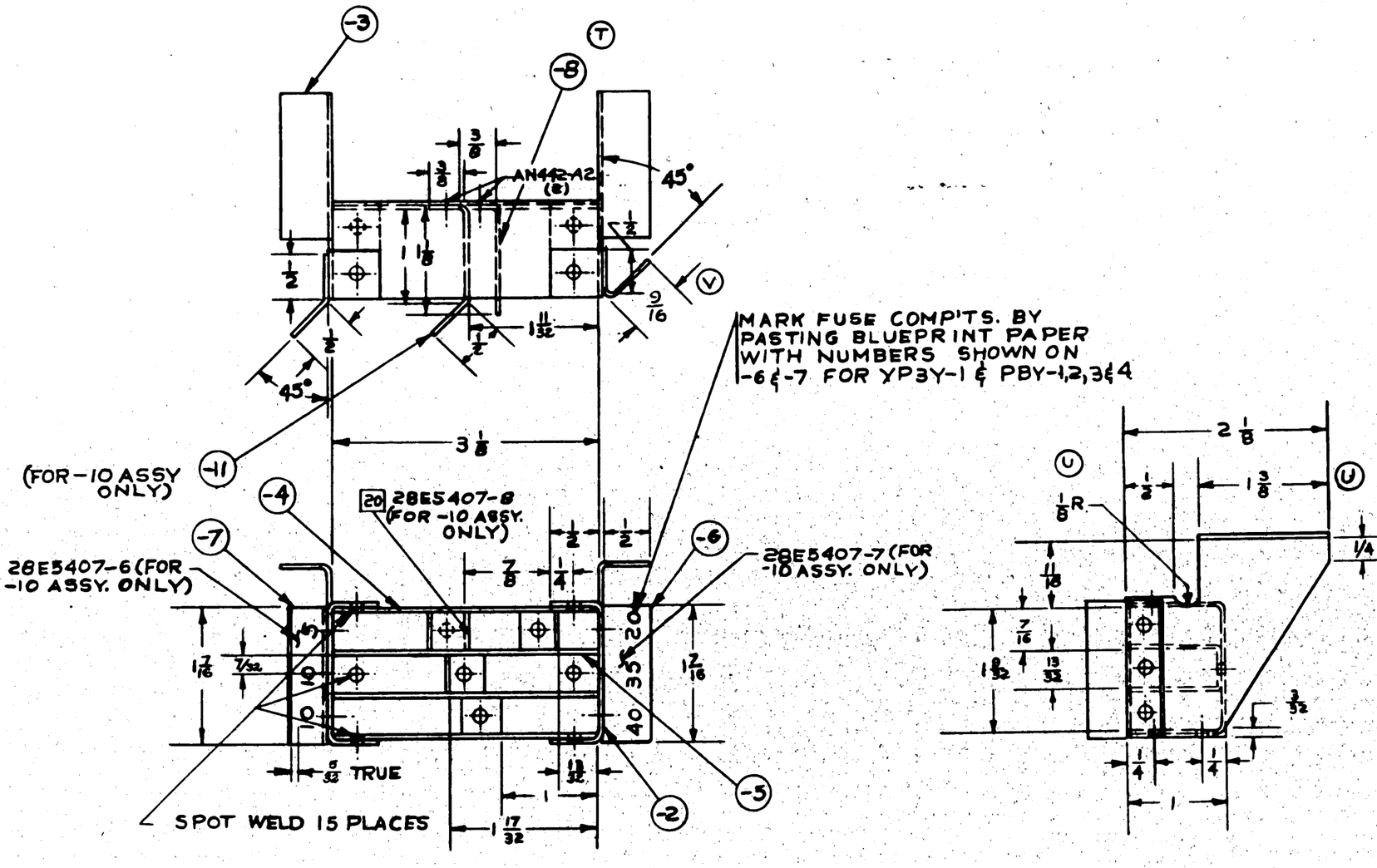

NOTE: SHELLAC 28E5407-6-7, & -8 IDENT. STRIPS TO 28E1058-7 -6 & -11 RESPECTIVELY.

FOR -550 ASSY. ONLY

FUSE COMP'TS TO BE MARKED BY CUTTING OUT BLUEPRINT PASTING ON -7

5 10 10

NOTE:
(1) ALL BEND RADII 1/16
(2) NUMBERS SHOWN USE ON PBY-5 (ON -550 ASSY ONLY)

5 35 20

FUSE COMP'TS TO BE MARKED BY CUTTING BLUEPRINT & PASTING ON -6

M.C.R. 173-1 {

ASSY. DASH NO.	MODEL	NEXT ASSY.	REQ.
-10	PBY-5A	28E4012	1
-10	PBY-5	28E4012	1
-550	28-5AMH	28E5711	REQ'D
-550	28-5AMC	28E5551	1
-550	28-5MA,C,E	28E5551	REQ'D
-550	PBY-5A	28E4012	1
-550	PBY-4 & 5	28E4012	REQ'D
-550	PBY-2 & 3	28E2003	REQ'D
-550	PBY-1	28E1056	1
-550	XP3Y-1	28E1056	1

TO M.C.R. 173-1 {

REQUIREMENTS PER AIRPLANE

REPLACES 28E1058 or 8/12/36 — 08 KRA CALC. WT.
REPLACED BY — ACT. WT.
UNLESS OTHERWISE SPECIFIED ± 1/32 — SCALE 12" = 1'-0"
STAMP PART NUMBER WHERE SHOWN

PART NO	STOCK	MATERIAL	SPEC.	LH REQ.	RH REQ.	LH REQ.	RH REQ.	LH REQ.	RH REQ.
PARTS LIST PER ASSY.				-550	-10	-3	-4	-5	
AN442-A2				2	3				
					1				
					1				
					1				
-11	.030 x 1/2 x 2 1/8	ALC 24ST.	QQ-A-362-T		1				
-8	.030 x 1/8 x 1 5/8	ALC 24ST.	QQ-A-362-T	2	2				
-7	.030 x 1 1/8 x 1 5/8	ALC 24SO	QQ-A-362-A	1	1				
-6	.030 x 1 1/8 x 1 5/8	ALC 24ST.	QQ-A-362-T	1	1				
-5	.030 x 2 1/2 x 3	ALCLAD		1	1				
-4	.030 x 3 3/8 x 3	ALCLAD		1	1				
-3	.030 x 2 1/4 x 3	ALCLAD		1	1				
-2	.030 x 2 1/4 x 3	ALCLAD	QQ-A-362-T	1	1				

A C		C.E. ADAMS				
NAVY SR-53	—	2/2/36	2/8/37			R
HEAT TREAT	FINISH	DRAFT	CHECK	STRUCT	MAT	APPROV	ENG.

NAME CONTAINER-ELEC-DISTR. PANEL-SPARE FUSE

CONSOLIDATED VULTEE AIRCRAFT CORP. SAN DIEGO DIVISION . . . SAN DIEGO, CALIF.

OPP. HAND NONE

SIZE D — DWG. 28E1058 SHEET 1 OF 2

R

2-01 8501382

SUPPLIES & EQUIPMENT CLASSIFICATION			
LET	ALTERATION	DATE	BY
A	TRACED		
B	ADDED PBY-4 PARTS. NEXT ASSY. ASSYMT. WAS 28E2414 FOR PBY-3	1-25-38	
C	REMVD. NOTE "28--ETC" & ADD NOTE "JIG DRILL-ETC." AC366DF832 EA4425 DS. WICKNESS.	9-6-42	
D	ON FACE FOR -2, REPLACED NOTE "ANGLE 3/4 x 3/4 x 1/16 RAT" WITH "-2 MAT. Y-2-A27RT x 13 3/8" WT. CH-NEG.	4-26-43	
E	#18 (.169) 4 HOLES WAS #18 (.191) 4 HOLES. BOX 28E4047 WAS BOX 28E1089. NO WT. CHG.	6-23-43	

EO A55209

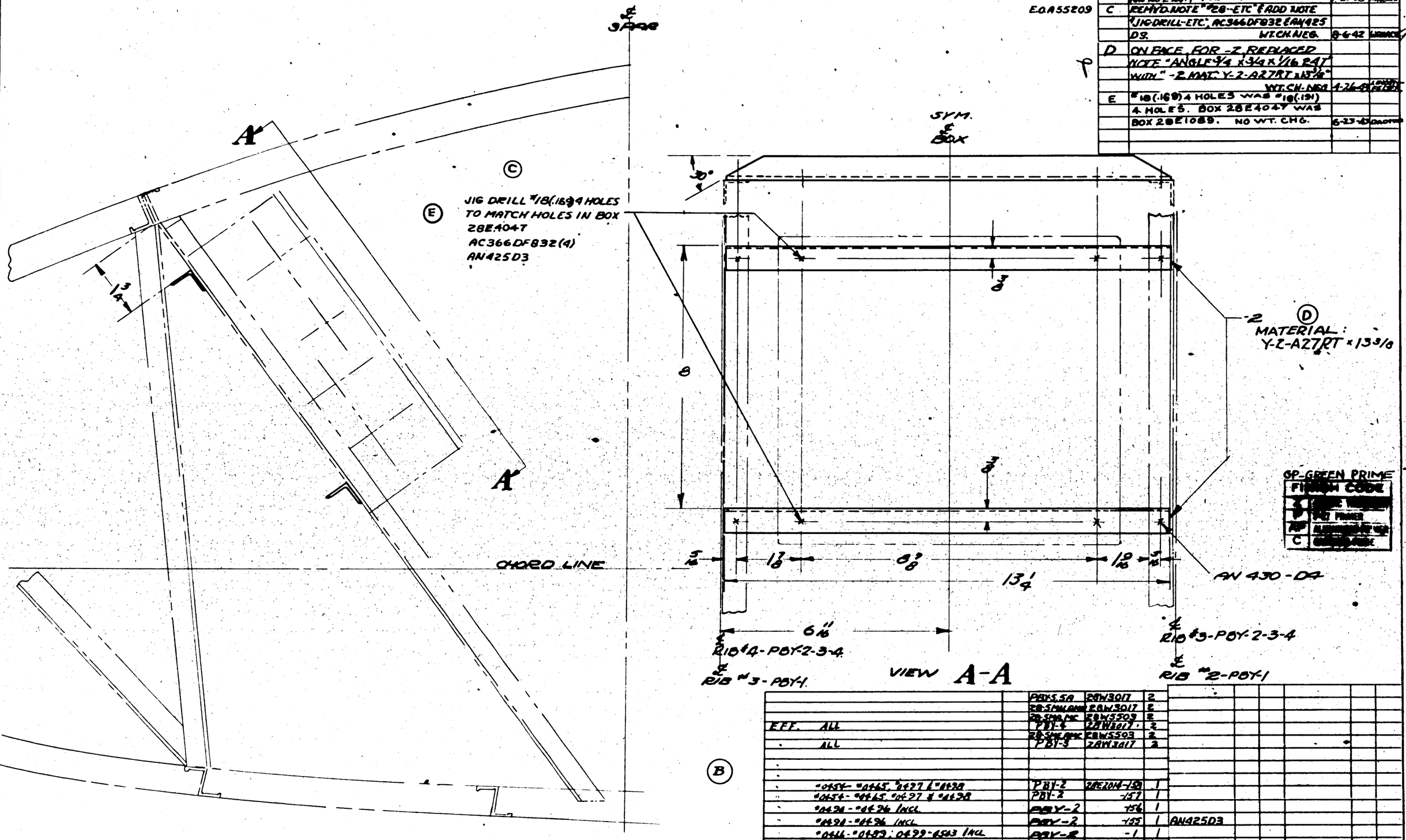

SP-GREEN PRIME

FINISH CODE	
A	
P	PRY PRIMER
ASP	
C	

EFF.																
	ALL		PBY-5 SA	28W3017	2											
			28-SPAR ASM	28W3017	2											
			28-SPAR PRT	28W5503	2											
	ALL		PBY-4	28W3017	2											
			28-SPAR ASM	28W5503	2											
			PBY-3	28W3017	2											
	-0454 - -0465, -0427 & -0438		PBY-2	28E20M-150	1											
	-0454 - -0465, -0427 & -0438		PBY-2	-157	1											
	-0438 - -0436 INCL.		PBY-2	-156	1											
	-0438 - -0436 INCL.		PBY-2	-155	1	AN425D3										
	-0446 - -0453; 0499-6503 INCL.		PBY-2	-1	1											
	-0446 - -0453; 0499-6503 INCL.		PBY-2	28E2M4-0	1											
			PBY-1	28E1044	1	AC366DF832	4									
			PBY-1	28E1044	1	AN430-04	4			28E1089-2	2					

REPLACES		APPROVED	DATE
REPLACED BY			
LIMIT ON DIMENSIONS UNLESS OTHERWISE SPECIFIED ± 1/32		CALC. WT.	ACT. WT.
SCALE 6" = 1'0"		REQUIREMENTS PER AIRPLANE	
NAVY NOTED	4049	NONE	Z-P-ESP
MATERIAL	SPEC.	HEAT TREAT	FINISH

O.H.	MODEL	NEXT ASSY.	REQ.	STD PARTS	LH REQ.	RH REQ.	PART NO.	LH REQ.	RH REQ.

MAT.	PARTS LIST PER ASSY.			
	5-3-38		6-6-38	
	TRACED	3-21-38	Greene	
	DRAFT	CHECK	EXAM.	ENG.

ALL AL. ALLOY SHEET SPEC. 47A10 (CONDITION T) ALLOY 24-T EXCEPT AS NOTED
ALL AL. ALLOY EXTENSIONS SPEC. 46A3 (CONDITION T) ALLOY 24-T EXCEPT AS NOTED
HEAT TREAT ALL CONDITION A MATERIAL PER SPEC. 3933
RIVETS AL. ALLOY EXCEPT AS NOTED

CONSOLIDATED AIRCRAFT CORP. BUFFALO, N. Y.

STAMP PT. No. WHERE SHOWN

NAME INST. - ELEC. - TERM BOX SUPPORTS.

OPP. HAND

DWG. D 28E1089

BULLARD-HOFFMAN CO., INC. BUFFALO
IMPERIAL TRACING CLOTH

SUPPLIES & EQUIPMENT CLASSIFICATION			
LET.	ALTERATION	DATE	BY
C	TRACED UP TO DATE	3-20-37	W.A.F.
D	CHANGED NEXT ASSEM. NO. 28E1096-2 TO 28E2084	4-1-37	Lessard
E	NAF 214067-1, AN960-AB WAS AN515-8-12, AN960-8 & 28E1149		
	DRILL #30(.128) TAP 8-32 NC-2 WAS DRILL #18 (.169)	12-13-40	Roux
E.O.C. 1973— E.O. A34076	F DIM. 3/16 WAS 1/4	8-7-41	[illegible]
	G AN442-AD3; WAS AN430-D3; 13/32 WAS 9/32; #30 DIMS		
	1/2 WAS 3/8. NO WT. CHG.	4-14-42	SMITH

E.O. 34-891

ALUM WELD CORNER SEAMS

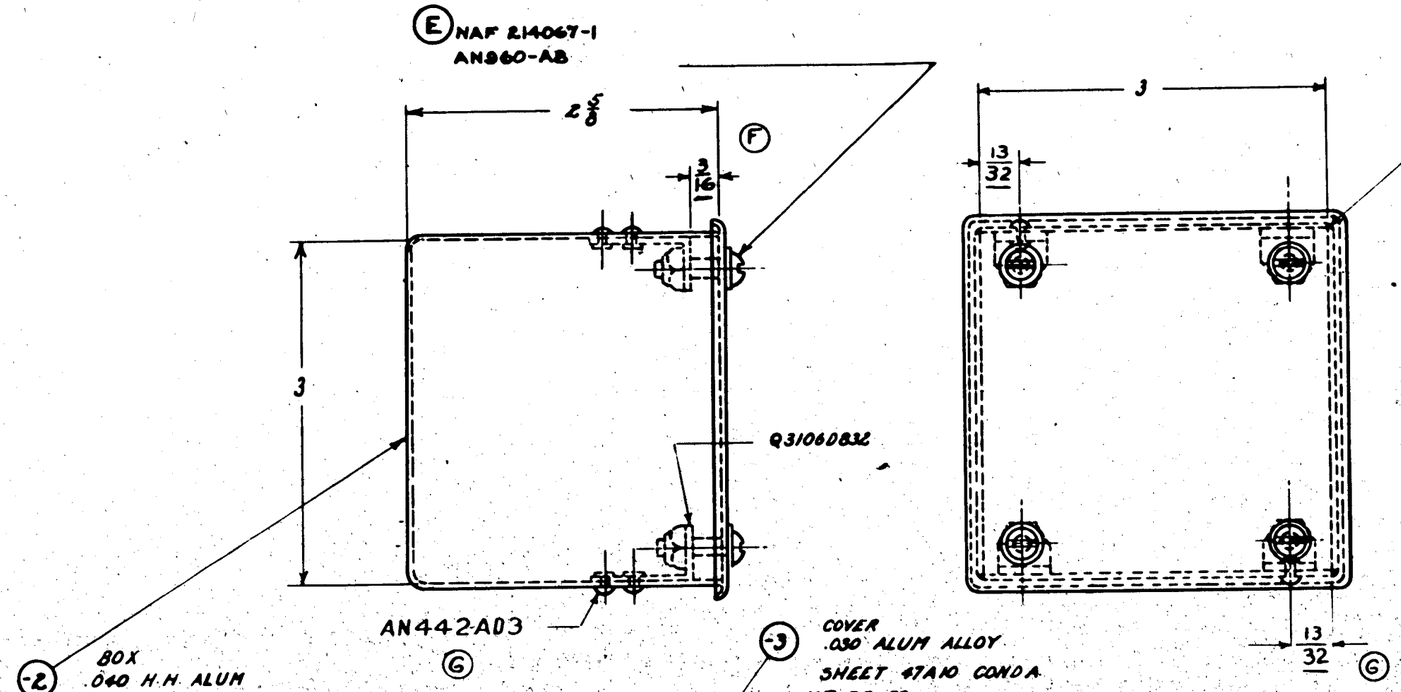

FINISH:
P= D27 PRIMER
GP= GREEN PRIMER

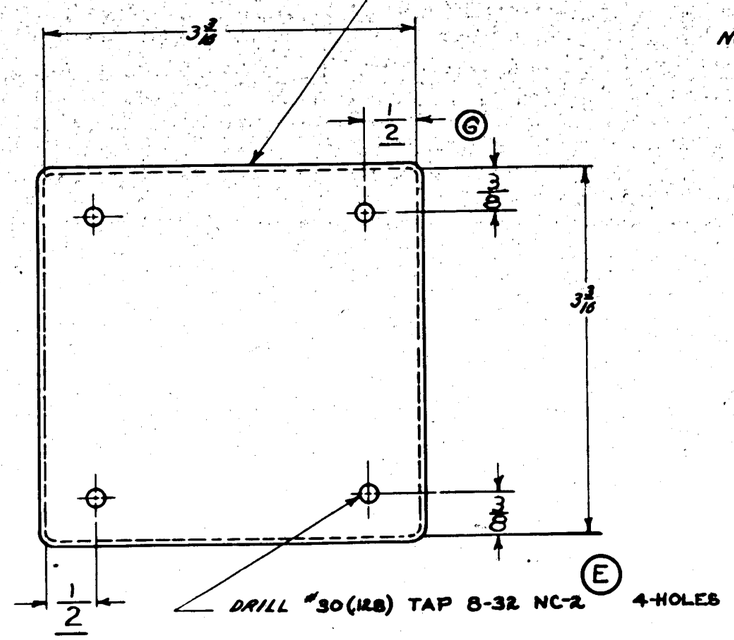

NOTES:
ALL BENDS 1/16 R
INSIDE DIMENSIONS SAME AS 22F1137

FINISH BEFORE ADDING SCREWS & STOP NUTS —P-2[redacted]GP
TOUCH UP SCREWS & STOP NUTS LATER

O.H.	MODEL	NEXT ASSY.	REQ.	ST'D PARTS	LH REQ.	RH REQ.	PART NO.	LH PEQ.	RH PEQ.
	28-5AMM	28E3015	1						
	28-5AMN	28E3014	1						
	PBY-5B	28E6069	1						
	28-5AMC	28E3015	1						
	28-5AMC	28E3014	1						
	28-5MN	28E3015	1						
	28-5MN	28E3014	1						
	28-5ME	28E3015	1						
	28-5ME	28E3014	1						
	28-5MC	28E3015	1						
	28-5MC	28E3014	1						
	28-5MA	28E3015	1						
	28-5MA	28E3014	1						
	PBY-5A	28E3015	1						
	PBY-5A	28E3014	1						
	PBY-5	28E3015	1						
	PBY-5	28E3014	1						
	PBY-4	28E3015	1						
	PBY-4	28E3014	1						
	XPBY-1	28E011	1						
	PBY-2	28E1008-4	1						
	PBY-2	28E1008-3	1						
	PBY-3	28E3015	1						
	PBY-3	28E3014	1	NAF214067-1	4		28E1095-3	1	
	PBY-1	28E1096-3	1	AN960-AB	4		28E1095-2	1	
	PBY-1	28E1096-2	1	AN442-AD3	6		31060832	4	

REPLACES	APPROVED [redacted]	DATE 3-36
REPLACED BY	.18 CALC.WT.	ACT.WT.
LIMIT ON DIMENSIONS UNLESS OTHERWISE SPECIFIED ± .010	SCALE 12"=1FT & NOTED	REQUIREMENTS PER AIRPLANE
[redacted]	AC	
	NAVY NOTED	NOTED / NOTED / NOTED
	MATERIAL	SPEC. / HEAT TREAT / FINISH

MAT. — PARTS LIST PER ASSY.

DRAFT	CHECK	EXAM.	ENG.
3-1-36	3-22-36	[illegible]	H.A.C.

CONSOLIDATED AIRCRAFT CORP. BUFFALO, N. Y.
STAMP PT. No. WHERE SHOWN

NAME: BOX ASS'Y - ELEC. CONDUIT JUNCTION

OPP. HAND

SIZE D — 28E1095

CONSOLIDATED AIRCRAFT CORP. BUFFALO, N. Y.

SUPPLIES & EQUIPMENT CLASSIFICATION			
LET	ALTERATION	DATE	BY
E	TRACED TO DATE	9-20-37	
F	INCORPORATED CO. 4818 FOR COMM. #2	8-20-38	
G	-4 SPEC. ADDED, OMITED 23/32 HOLES on -4 Assy	11-4-40	DUST
H	ADDED 1/8 WATER DRAIN HOLE	1-27-42	
J	ADDED TO FACE OF DRAW. # B/M. Q6202-3(2) AN515-4-7(4) AN960-AL4(4) AN340-4(4) AN935-4(4) FOR -4 ASS'Y ONLY @ #32		
	C.116) 4 HOLES NO WT. CHANGE	3-18-42	
K	ADDED 28E5787-7(1) & 28E5787-6 (1), & NOTE #2 "SHELLAC ---- SHELLAC" (NEG. WT. CHG.)	5-8-42	
L	ADDED PBY-5A TO LIMITS OF HOLES, NO WT. CHG.	8-6-42	
M	CREATED -5 ASSY NEG WT. CHG.	12-19-42	
N	CHG'D. NOTE #2 WAS "SHELLAC 28E5787-1(FOR PBY-5 CONT. #91876) & 28E5787-7 (FOR PBY-5A CONT. #88476-3340N) TO INSIDE OF BOXES & COVER WITH SHELLAC." WT. CHG. NEG.	1-18-43	
P	LIMITED -4 ASS'Y FOR PBY-5A N/A 28E1017 TO CONTRACTS 70496, 77713 & 88476 ONLY. ADDED -5 ASS'Y FOR PBY-5A N/A 28E1017 FOR NOA(S)464. WT. CHG. NEG.	9-25-43	

E.O.A20488

E.O.A25920

E.O. "A34725

E.O. "A54548 "A"

ONLY E.O. A60008

THESE 2 HOLES FOR PBY-2 & PBY-3 & PBY-5 & PBY-5A ONLY. OMIT 23/32 DIA. HOLE FOR PBY 5 & 5A ONLY. (G)

28E1086-2

NO FINISH

Q6202-3 (2)
AN515-4-7 (4)
AN960-AL4 (4)
AN340-4 (4)
AN935-4 (4)

FOR PBY-5 & 5A -4 ASS'Y

23D/32 OMIT ON COMM'L 2

3

1

(APPROX) 1/8

(H) DRILL 1/8 FOR WATER DRAIN

1 1/16

1 1/2

2 1/2

1 11/16

1 85D/32

1 85D/32

(APPROX) 1/8

2 17D/32

3/32

2

3/4 (REF.)

31/32

1 21/32

#32 (.116) 4 HOLES TO MATCH Q6202-3 (REF) FOR -4 ASS'Y ONLY

THESE 2 HOLES FOR PBY-1 ONLY

PBY-2 & PBY-3 ONLY & PBY-5 (G)

2 1/32 D — PBY-1 ONLY

2 17/32 D.

2 2/16

1 3/4

2

1

PBY-1-ONLY 1 7/32 D.

1 5/8

1

NOTE:-
*1- REMOVE FINISH AROUND HOLES ON (N) OUTSIDE FOR 3/32 RADIAL DISTANCE.
*2 APPLY 28E5787-6 (FOR PBY-5 CONT. #91876) & 1-90 & 28E5787-7 (FOR PBY-5A CONT. #88476-3340N) TO INSIDE OF BOXES FOR -4 ASS'Y ONLY. IF BLUEPRINT IS USED APPLY WITH & COVER OVER SHELLAC. (P)

NOTE:-
28E1112 FOR PBY-1 BOXES ONLY
28E1112-2 IS NUMBER FOR PBY-2 & PBY-3 BOXES.
28E1112-3 IS ASS'Y NO. FOR COMM. #2
(G) 28E1112-4 FOR PBY-5 BOXES ONLY.

* SEE NOTE #2

| | | |

SUPPLIES & EQUIPMENT CLASSIFICATION			
LET	ALTERATION	DATE	BY
C	TRACED UP TO DATE	7-20-37	RMC
D	1 25/32 DIA. HOLE FOR -2 ASSY. WAS 1 3/4	1-2-41	LITTLE
	& 28E1117-2 ASSY. WAS 28EW17-0		
E	28E3576 WAS 28E1012	6-11-41	
	FOR -2 ASSY IN NEXT ASSY		
	COL'M.		
F	-3 ASSEMBLY CREATED & 1 7/32 DIA		
	HOLE OMITTED	4/23/41	
G	ADDED 1/8 WATER DRAIN HOLE	4-24-42	
H	ADDED Q6202-3(2), AN515-4-7(4),		
	AN960-PL4(4), AN340-4(4),		
	AN935-4(4) ON COVER. WT.		
	CHG. NEG.	5/18/42	
J	ADDED NOTE "SHELLAC ..... PBY-5A SHEET ROSS		
	28E5788-6 & -7 TO 5/41 NEG. WT. CHG.	9-23-42	
K	-3 ASSY. WAS -2 ASSY. FOR		
	28-5AMN. IN "REQ. A/PLANE"	7-11-42	
	NEG. WT. CHG.		
L	CREATED -4 ASS'Y. WITCHS	10-9-42	
M	CREATED -5 ASSY.		
	REVISED REQ'TS/AIRPLANE,		
	WT. CHG. NEG.	12-21-42	
N	28E5788-6(-) REPLACED 28E		
	5788-7(-) ON -3 ASSY 28E5788		
	-7(-) REPLACED 28E5788-6(-)		
	ON -4 ASSY. NOTE "SHELLAC		
	---1 ON" WAS "SHELLAC ---ONLY"		
	NO WT. CHG	12-21-42	
P	INCORP. O. A95220 BY REQ.	1-9-43	
	"COVAR" FERN NOT REQ'D.		
Q	CHG. "NOTE" SHELLAC ETC	1-9-43	
	28-6 --- SHELLAC --- TO		
	APPLY FILLET SHELLAC --- AMEN.		
	ADDED "P" NOTE CHART --- AMEN.		

E.O. 31508 A
28-5 MN

E.O. 32735 PBY-5A, 28-5AMC, OA-10

E.O. A25921

E.O. A34727
E.O.# A47295

E.O. A84035
& E.O. A41084 CAC # 2609

& E.O. A80359 CAC # 89-18

E.O. A95220

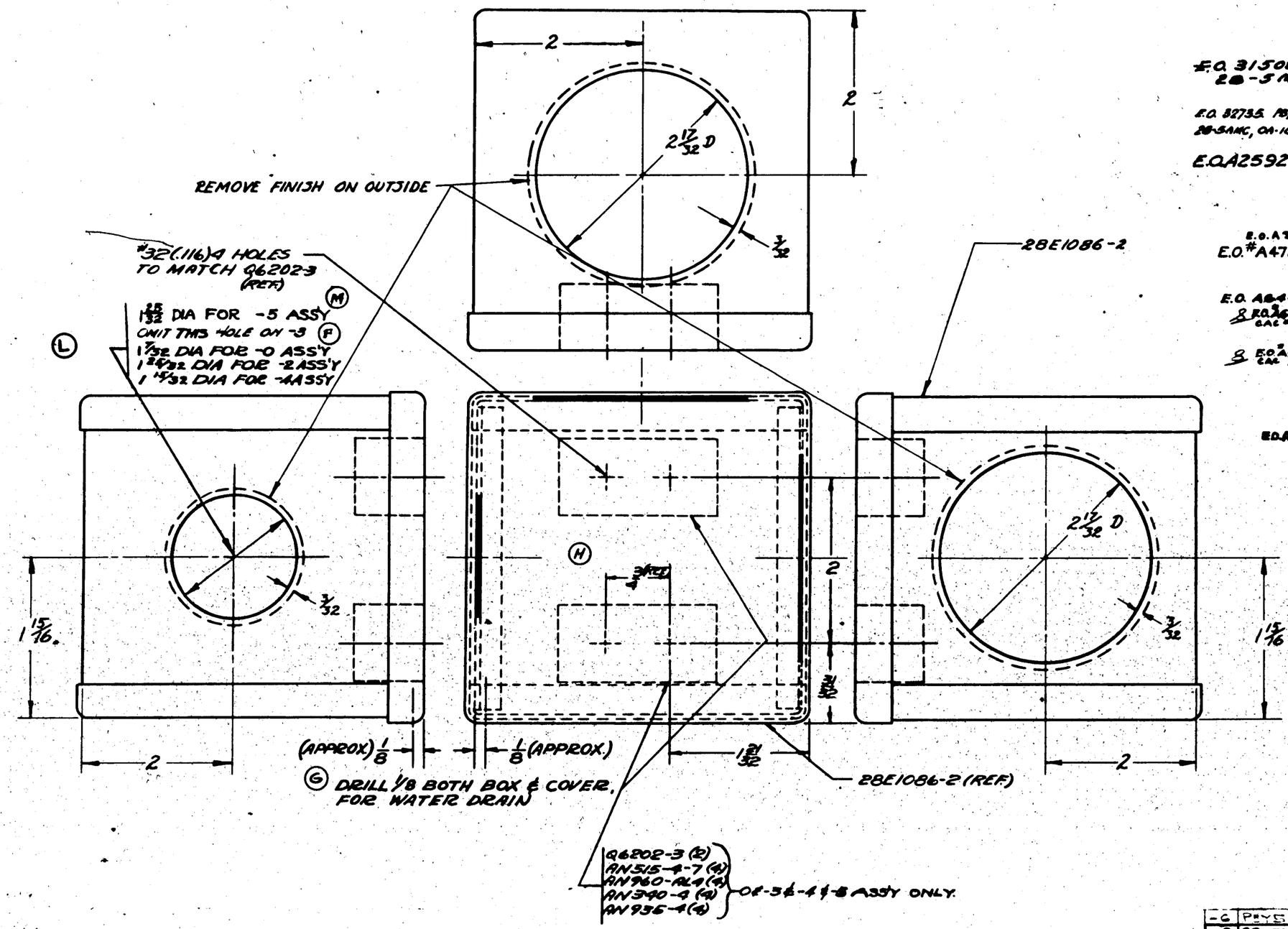

~NOTE~
(P) APPLY 28E5788-6 TO INSIDE OF BOX FOR CONT. #91876 #1 TO 90 & CONT. 88476 APPLY.
(J) (N) 28E5788-7 TO INSIDE OF BOX FOR CONT 91876 #91 & ON.
(Q) IF BLUE-PRINT CUT-OUT IS USED, APPLY & COVER OVER WITH SHELLAC.

C-91876 90 & 5-46 & ON

C. 77713, 70496, 88476 #53-140

(C. 94876) #1 TO #52

(C. 87646 & 91876) #1-89

-6	PBY-5A	28E1012	1										
-8	28-5AMN	28E5708	1										
-7	28-5AMC	28E5748	1										
-5	PBY-5	28E1012	1										
-4	28-5MN	28E5708	1										
-3	28-5MC	28E5576	1										
-0	28-5MC	28E5708	1										
-2	28-5MN	28E5576	1							28E5788-7		1	1
-1	PBY-5A	28E1012	1							28E5788-6	1	1	
-4	PBY-5	28E1012	1							AN935-4	4	4	4
-0	PBY-5	28E1012	1							AN340-4	4	4	4
-0	PBY-5	28E1012	1							AN960-PL4	4	4	4
	PBY-3	28E1012	1							AN515-4-7	4	4	4
	PBY-2	28E1012	1							Q6202-3	2	2	2
	PBY-1	28E1012	1							28E1086-2	1	1	1
O.H.	MODEL	NEXT ASSY.	REQ.	ST'D PARTS	LH REQ.	RH REQ.	PART NO.						

REPLACES	APPROVED 5-5-36 DATE			
REPLACED BY				
LIMIT ON DIMENSIONS UNLESS OTHERWISE SPECIFIED ± 1/32	48 CALC. WT. / ACT. WT.	REQUIREMENTS PER AIRPLANE	MAT.	PARTS LIST PER ASSY.
	SCALE 12" / 0"			
	AC			
	NAVY NOTED	NOTED / NONE	NONE	
	MATERIAL	SPEC. / HEAT TREAT	FINISH	DRAFT / CHECK / EXAM. / ENG.

CONSOLIDATED AIRCRAFT CORP. BUFFALO, N. Y.

STAMP PT. No. WHERE SHOWN

NAME: BOX ASSEM.-ELEC. BULKHEAD #4.0 JUNCTION

OPP. HAND NONE

D 28E1117

LET	ALTERATION	DATE	BY
N	REDRAWN	2-24-40	ROSS
P	LIMITED - 2 ASS'Y FOR PBY-5		
	TO # 1-65 & 91-345. NO WT. CHG.	2-24-40	ROSS
Q	CREATED - 3 ASS'Y. NEG. WT. CHG.	2-24-40	ROSS
R	CREATED - 11 ASS'Y TO RE-		
	PLACE - 3 ASS'Y. NO WT. CHG.	11-24-40	ROSS

E.O.A64296 MCR. 23-19
E.O.A38657 MCR. 89-18
E.O.A74588

Q6202-1
AN515-4-7 (2)
AN365-440(2)
— FOR ASS'YS -0, -2 & -9 ONLY

21/32 DIA. HOLE
AN3064-4 (1)
AN3066-4 (1)
— FOR -11 ASS'Y ONLY Ⓡ

1½

1½

B

1⅛

1⅛

23/32 DIA. 2 HOLES

NOTCH (APPROX. ⅛) WITH #4 RAT-TAIL FILE FOR WATER DRAIN

Q6202-1
AN515-4-7 (2)
AN365-440(2)
— FOR-11 ASS'Y ONLY Ⓡ

21/32 DIA. HOLE
AN3064-4 (1)
AN3066-4 (1)
— FOR-2 ASS'Y ONLY

A

NO FINISH

3/32

31/32 D

2½

1

-6

-7 FOR -0 ASS'Y ONLY

-10 FOR -9 ASS'Y ONLY

-8 FOR -2 ASS'Y ONLY

-12 FOR -11 ASS'Y ONLY Ⓡ

MADE FROM NAF39923-1 BOX ASS'Y

21/32 DIA. HOLE
AN3064-4(1)
AN3066-4(1)
(FOR -9 ASS'Y ONLY)

A	B	ASS'Y
1 1/4	1	FOR-2
1	1 1/4	FOR-11
1 11/16		FOR-0

C.91876 # 91 TO 345

MCR. 89-18 & 23-19, C 91876 # 1 TO 89 — Φ

C.70496)
C.77713)
C.70496

NOTE: Φ -2 ASSY USED ON C 88476 (ALL), 77713 (PBY-5A - 118 SHIPS) & 70496 (PBY-5 - 111 SHIPS & PBY-5A 28 SHIPS)

NOTE:
1. DO NOT FINISH HOLE MARGINS OUTSIDE ONLY, FOR 3/32 RADIAL DISTANCE
2. FINISH: P-2GP AFTER DRILLING
3. REMOVE FINISH AROUND HOLES FOR 3/32
4. SHELLAC 28E5352 TO INSIDE OF 28E1119-6 COVER ON -11 ASS'Y.

-11	PBY-5	28E1018	1
-9	28-5AMN	28E3647	1
-2	PBY-5A	28E1018	1
-8	PBY-5	28E1018	1
-0	28-5AMN	28E3647	1
-0	28-5AMC	28E3647	1
-0	28-5MC	28E3647	1
-0	28-5ME	28E3647	1
-0	28-5MA	28E3647	1
-0	PBY-5A	28E1013	1
-0	PBY-5	28E1013	1
-0	PBY-4	28E1013	1
-0	PBY-3	28E1013	1
-0	PBY-2	28E1013	1
-0	PBY-1	28E1013	1

PART No.	STOCK	MATERIAL	SPEC.	LH REQ.	RH REQ.	LH REQ.	RH REQ.	LH REQ.	RH REQ.	LH REQ.	RH REQ.	LH REQ.	RH REQ.
28E5352													
AN3066-4						1	1						
AN3064-4						1	1			1	1		
AN365-440				2	2	2	2	2	2				
AN515-4-7				2	2	2	2	2	2				
Q6202-1				1	1	1	1	1	1				
-12										1	1		
-10												1	
-8								1					
-7													
28E1119 -6				1									
PARTS LIST PER ASSY.				-0		-2		-9		-911		-8	

A C		3-11-36	STEER		E.D.K	L.C.W.
NAVY	NOTED	TIMMS	H2-37			12-16-36
HEAT TREAT	FINISH	DRAFT	CHECK	STRUCT	MAT	APPROV.

NAME BOX ASSEMBLY-ELECT. BULKHEAD NO. 7 JUNCTION
CONSOLIDATED AIRCRAFT CORP. SAN DIEGO, CALIF.

OPP. HAND
SIZE D
28E1119

R

PRICK PUNCH (4 HOLES) TO BE DRILLED ON FINAL ASSEMBLY

$1\frac{5}{8}$ — $1\frac{7}{32}$ DIA. 1 HOLE

$\frac{31}{32}$ DIA. 1 HOLE -2 BOX ONLY

$\frac{31}{32}$ DIA. 1 HOLE -5 ONLY -56 ASSY

$5\frac{1}{8}$ — $3\frac{9}{16}$ — $3\frac{9}{8}$ — $1\frac{7}{8}$ — $1\frac{1}{8}$ — $\frac{11}{32}$ — $\frac{11}{16}$ — $\frac{9}{8}$ — $\frac{15}{16}$ — $1\frac{1}{8}$ R — 1 — $1\frac{5}{8}$ — $1\frac{1}{8}$ — 3

*30(.128) DRAIN HOLE
NOTE:- REMOVE BURRS

$\frac{31}{32}$ DIA-1 HOLE

Q3106D832, AN442D3
AC515-8-12 & AN960-8
DRILL #18(.169) 4 HOLES IN COVER
28E1149 FORCE THD ONTO SCREW

(-2) BOX FOR -0 ASS'Y.
.040 ALUM. SHEET E.O.M6608
SPEC. 47-A-2 H.H.
WELD CORNERS

(-5) BOX FOR -56 ASS'Y (N)

(-4) BOX FOR -10 ASS'Y.
.040 ALUM. SHEET
SPEC 47-A-2 H.H.
WELD CORNERS

PRICK PUNCH (4 HOLES) TO BE DRILLED ON FINAL ASS'Y.

$1\frac{7}{32}$ DIA-1 HOLE

$\frac{31}{32}$ DIA-1 HOLE

*30(.128) DRAIN HOLE
NOTE: REMOVE BURRS

SCALE: 6" = 1'-0"
(FOR -4 BOX)

(R)

DRILL #10(.193) 4 HOLES

NAF 39961
*GOVERNMENT FURNISHED
SEE NOTE

AN520D10-8
AN345D10
AN960D10
AN935-10

AC SELECTOR SWITCH TYPE B-1
45°
AUX. PORT — STBD — OFF
$3\frac{1}{2}$ Q

$2\frac{19}{16}$ — $1\frac{13}{32}$ — $5\frac{9}{8}$ — $3\frac{9}{16}$ — $2\frac{9}{32}$ — $\frac{15}{32}$ — $1\frac{19}{16}$ — $3\frac{5}{8}$ — $3\frac{1}{8}$ DIA. 1 HOLE

(9) COVER
.090 ALUM. ALLOY SHEET
SPEC. 47-A-10 COND. A
H.T. AS PER SPEC. SR-53

$\frac{1}{16}$ R — $\frac{3}{16}$

NOTE:-
FINISH — P-2 GP BEFORE ASSEMBLY
TOUCH UP SCREW & RIVET HOS.
NO FINISH ON OUTSIDE HOLE
MARGINS FOR $\frac{3}{32}$ RADIAL DISTANCE.
BOX DIMENSIONS SAME AS 22F1620

ON NAF 39961 REMOVE BACK COVER
BEFORE INSTALLING SWITCH IN BOX.
RETURN TO NAF.

GP-GREEN PRIME
FINISH [redacted]

SUPPLIES & EQUIPMENT CLASSIFICATION			
LET	ALTERATION	DATE	BY
J	TRACED TO DATE	3-22-37	[redacted]
K	ADDED -4 & ASS'Y -10	4-20-39	Kearney
L	ADDED -0 REQ. FOR PBY-5	7-13-40	FINCKE
M	REMOVED $\frac{33}{64}$ DIA. HOLE.	11-4-40	[illegible]
N	CREATED -5 BOX & -56 ASS'Y & ADDED REQ. FOR -56 ASS'Y FOR PBY-5A & Q410	2-22-41	Goodhue
P	ADDED $\frac{31}{32}$ DIA HOLE IN -2	6-23-41	Goodhue
R	REMOVED "IN -2 ONLY" ON FACE FROM $\frac{31}{32}$ DIA. HOLE	8-5-41	[illegible]
S	REVISED HOLE LOCATIONS FOR $\frac{31}{32}$ DIA HOLES ON BACK & SIDE AC-8 BOX & LOCATING DIMS	2-25-42	Goodhue
T	REMOVED $\frac{31}{32}$ DIA HOLE FOR -5 BOX	1-19-42	Goodhue

E.O. 25016
{E.O. 32737 (PBY-5A, Q410)

PBY-5 E.O. 37176
E.D.C. 1969

E.O. A13614

(N)												
-56	PBY-5	28E4018	1	AN515-8-12	4		28E1123-5		1	1
-56	PBY-5A	28E4018	1	*NAF39961	1		28E1123-4		1	
-0	PBY-5	28E4018	1	AN442D3	8					
-10	PBY-5A	28E4018	1	AN935-10	4		28E1140	4	4	4
-0	PBY-4	28E4018	1	AN960D10	4		28E1123-3	1	1	1
-0	PBY-3	28E4018	1	AN345D10	4		28E1123-2	1		
-0	PBY-2	28E4018	1	AN520D10-8	4					
-0	PBY-1	28E4018	1	AN960-8	4		Q3106D832	4	4	4
O.H.	MODEL	NEXT ASSY.	REQ.	ST'D PARTS	8-10 REQ.		PART NO.	-0	-10	-56

REPLACES				
REPLACED BY				
LIMIT ON DIMENSIONS UNLESS OTHERWISE SPECIFIED ± .010				
[redacted]	APPROVED [redacted] DATE 5-15-36			
1.35 CALC. WT. ACT. WT.				
SCALE 12" = 1'-0" & HALF	REQUIREMENTS PER AIRPLANE	MAT.	PARTS LIST PER ASSY.	
AC			5-13-36 [illegible]	
NAVY NOTED	NOTED	NOTED	NOTED	Harris 5-23-37 Miller
MATERIAL	SPEC.	HEAT TREAT	FINISH	DRAFT CHECK EXAM. ENG.

CONSOLIDATED AIRCRAFT CORP.
BUFFALO, N. Y.
STAMP PT. No. WHERE SHOWN

NAME BOX ASS'Y - ELEC - A.C. SWITCH

OPP. HAND NONE

SIZE D — 28E1123

LET	ALTERATION	DATE	BY
K	REDRAWN	9-1-42	Barsh
L	CREATED -4 ASS'Y. ADDED -10 COVER FOR -4 ASS'Y. ONLY. WT. CHG. +.09	9-1-42	Barsh
M	"REMOVE FINISH 3/32 RADIALLY AROUND HOLES" WAS "DO NOT FINISH HOLES MARGINS ON OUTSIDE FOR 3/32 RADIAL DISTANCE. FINISH-P27 PRIMER INSIDE, P27 PRIMER GREEN PRIME WAS P27 PRIMER 2 COATS GREEN PRIME REMOVED NOTE "REMOVE ANODIC FILM SAME AREA" E.O.A 64116	3-23-43	SHELTON
N	CANCEL -1 ASSY FOR C.88476 #103 FOM		

E.O.A 43013

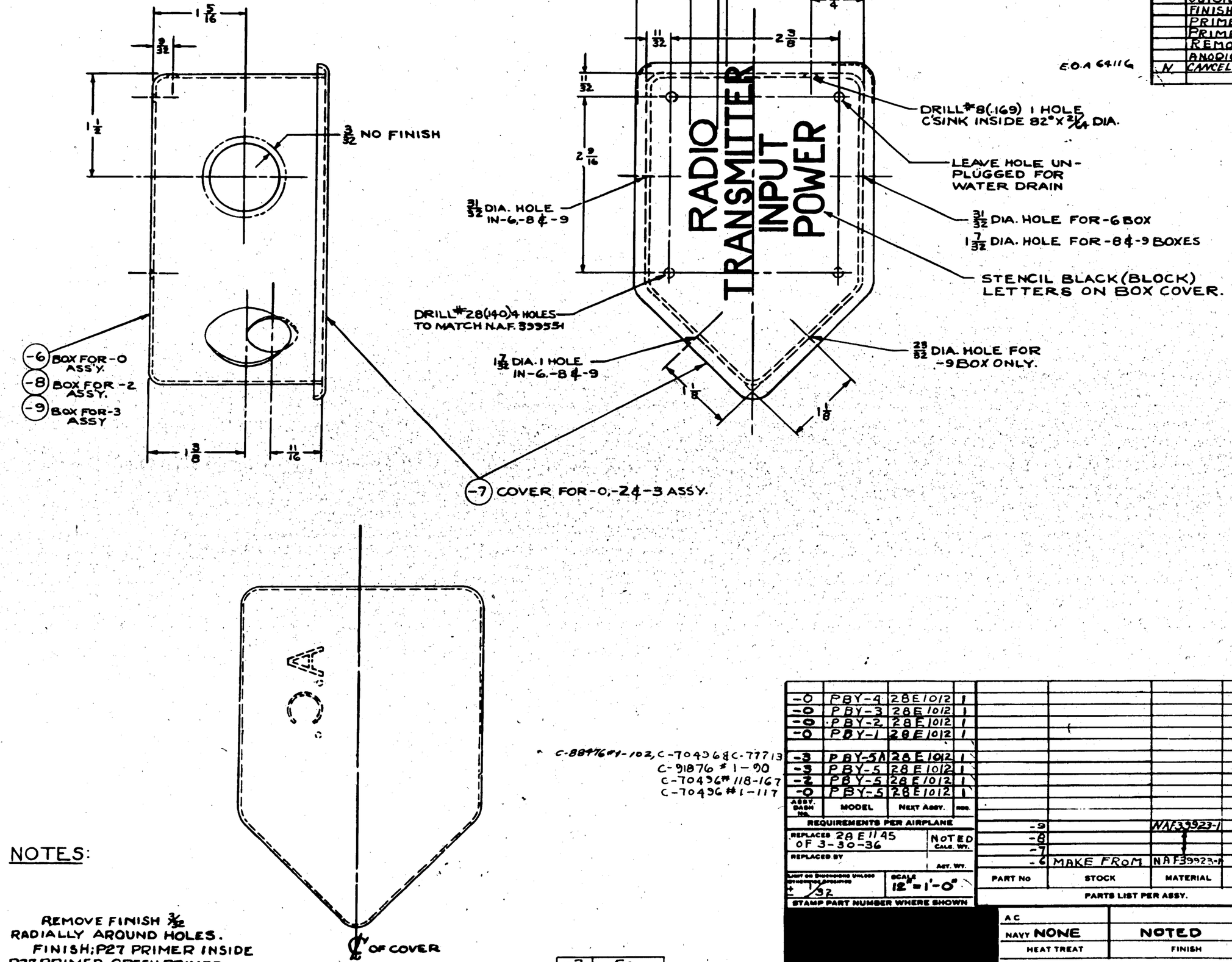

NOTES:

REMOVE FINISH 3/32 RADIALLY AROUND HOLES. FINISH; P27 PRIMER INSIDE P27 PRIMER, GREEN PRIMER OUTSIDE (M)

-3	.50
-2	.50
-0	.50
ASSY DASH NO.	CALC. WT.

* C-88476 #1-102, C-70436 & C-77713
C-91876 #1-90
C-70436 #118-167
C-70436 #1-117

ASSY. DASH No.	MODEL	NEXT ASSY.	REQ.
-0	PBY-4	28E1012	1
-0	PBY-3	28E1012	1
-0	PBY-2	28E1012	1
-0	PBY-1	28E1012	1
-3	PBY-5A	28E1012	1
-3	PBY-5	28E1012	1
-2	PBY-5	28E1012	1
-0	PBY-5	28E1012	1

REQUIREMENTS PER AIRPLANE

REPLACES 28E1145 OF 3-30-36 — NOTED CALC. WT.
REPLACED BY — ACT. WT.
LIMIT OF DIMENSIONS UNLESS OTHERWISE APPROVED ± 1/32 — SCALE 12" = 1'-0"
STAMP PART NUMBER WHERE SHOWN

PART No	STOCK	MATERIAL	SPEC.	LH REQ.	RH REQ.	LH REQ.	RH REQ.	LH REQ.	RH REQ.	LH REQ.	RH REQ.	LH REQ.	RH REQ.
-9		WAF39923-1						1		1			
-8		"				1		1					
-7				1		1							
-6	MAKE FROM	NAF39923-1		1									

PARTS LIST PER ASSY.

A C		9-1-42	DRAWN MAN							
NAVY NONE	NOTED	R MARSH								
HEAT TREAT	FINISH	DRAFT	CHECK	STRUCT	MAT	APPROV	ENG			

NAME BOX - ELEC. - A.C. — D.C. JUNCTION

OPP. HAND

CONSOLIDATED AIRCRAFT CORP. WF SAN DIEGO, CALIF.

DWG. SIZE D — 28E1145

R 9 15 42

LET	ALTERATION	DATE	BY
U	TRACED NO WT. CHG.	8-14-43	DEUEL

(-11) FOR -570 ASS'Y.
(-10) FOR -560 ASS'Y.
(-9) FOR - 3 ASS'Y.
(-8) FOR - 5 ASS'Y.
(-7) FOR - 0 ASS'Y.

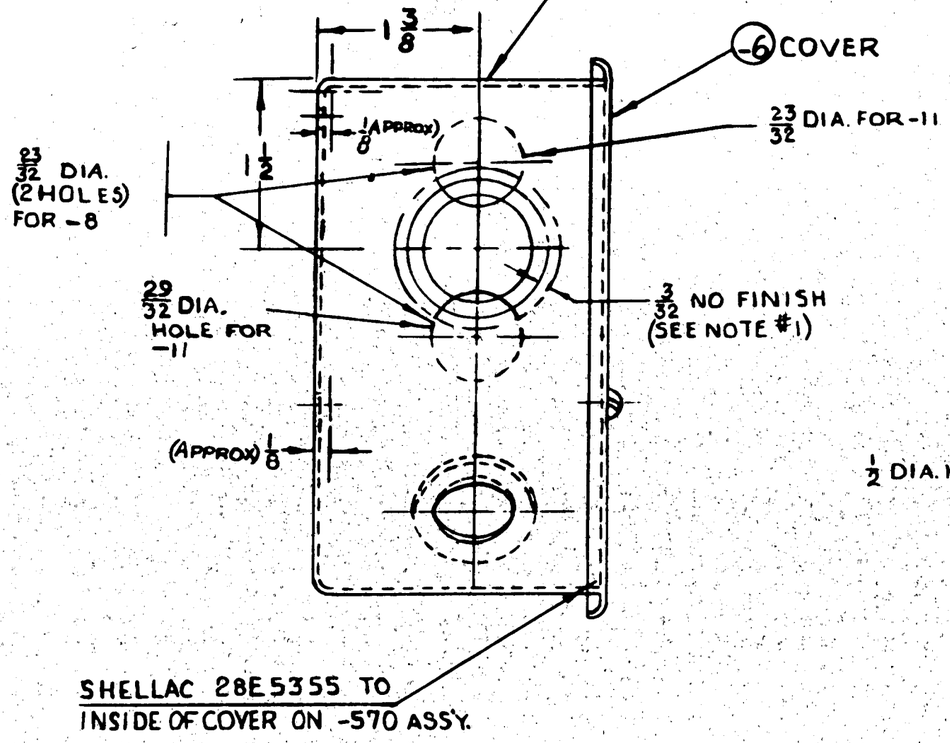

SHELLAC 28E5355 TO INSIDE OF COVER ON -570 ASS'Y.

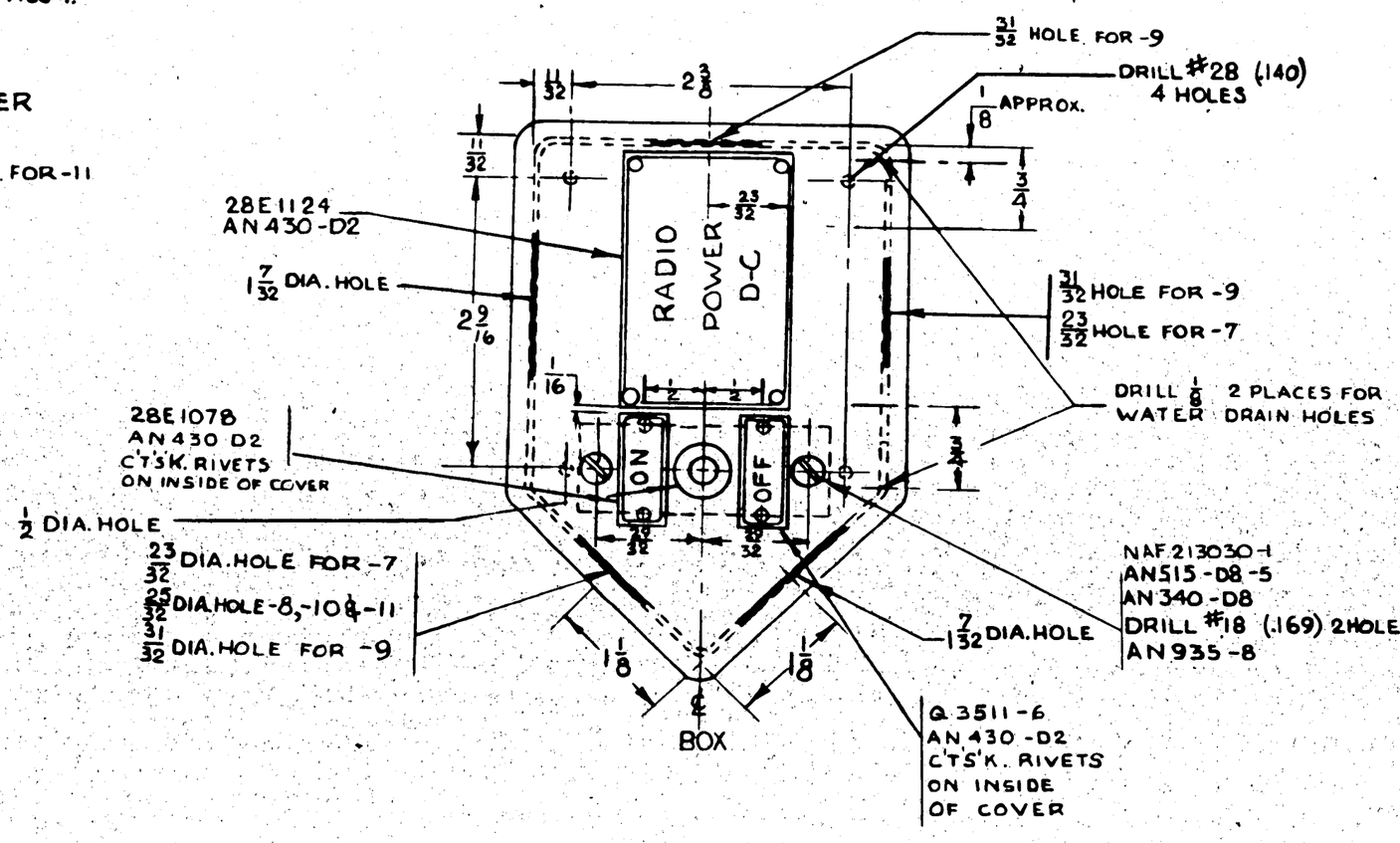

NOTE:—

1. DO NOT FINISH HOLE MARGINS ON OUTSIDE FOR 3/32 RADIAL DISTANCE. REMOVE ANODIC FILM SAME AREA.
2. FINISH: —P-2GP AFTER DRILLING.
3. ASSEM. NO. FOR COMM. #2 is 28E1164-3

FINISH CODE	
Z	ANODIC TREATMENT
P	P-27 PRIMER
GP	GREEN PRIMER
C	CADMIUM PLATE

C.91876 -90 ON
1 TO 89 - C.91876
CONT. 77713 #1 TO 10 & C.88476
CONT. 77713 #11 ON
CONT. 70496 —

ASSY. DASH NO.	MODEL	NEXT ASSY.	REQ'D.
-570	PBY-5	28E4018	1
-550	PBY-5	28E4018	1
-550	PBY-5-A	28E4018	1
-560	PBY-5A	28E4018	1
-550	PBY-5A	28E4018	1
-550	PBY-5	28E4018	1
-0	PBY-4	28E4018	1
-0	PBY-3	28E4018	1
-3	COMM. #2	28E1018-300	1
-0	PBY-2	28E1018	1
-0	PBY-1	28E1018	1

REQUIREMENTS PER AIRPLANE

REPLACES 28E1164 OF 4-23-36 — 50 CALC. WT.
REPLACED BY — ACT. WT.
± 1/32 — SCALE 12"=1'-0"
STAMP PART NUMBER WHERE SHOWN

PART NO.	STOCK	MATERIAL	SPEC.	LH REQ.	RH REQ.	LH REQ.	RH REQ.	LH REQ.	RH REQ.	LH REQ.	RH REQ.	LH REQ.	RH REQ.
AN935-8				2	2	2	2	2	2	2	2	2	2
AN430D2				2	2	2	2	2	2	2	2	2	2
AN515-D8-5				2	2	2	2	2	2	2	2	2	2
AN340-D8				2	2	2	2	2	2	2	2	2	2
NAF2130301				1	1	1	1	1	1	1	1	1	1
Q3511-6				1	1	1	1	1	1	1	1	1	1
28E1124				1	1	1	1	1	1	1	1	1	1
28E5355				1	1	1	1	1	1	1	1	1	1
28E1078				1	1	1	1	1	1	1	1	1	1
-11	MAKE FROM NAF39923-1												
-10													
-9						1							
-8								1					
-7				1									
-0					1		1		1		1		1
PARTS LIST PER ASSY.				-0	-3	-550		-560		-570			

A C		ADAMS		MILLER		LCW	R
NAVY NONE	NOTED	4-23-36			SHANNON 12-28-36		
HEAT TREAT	FINISH	DRAFT	CHECK	STRUCT	MAT	APPROV	ENG.

NAME BOX — ELEC. — D.C. RADIO JUNCTION
OPP. HAND
CONSOLIDATED VULTEE AIRCRAFT CORP. SAN DIEGO DIVISION . . . SAN DIEGO, CALIF.
DWG. SIZE D — 28E1164

R 28E1164

LIQUIDOMETER STROKE ADJUSTMENT RHEOSTAT, SK-AC-134-136-3
AN 520 D10-16 SCREWS
AN 960 D10 WASH. AN935-10 WASH.
AN 345 D10 NUT
QG10 MG-16 SPACER.

2 17/32 DIA., 2 HOLES FOR -2 ONLY

2 1/32 DIA., 1 HOLE FOR -2 ONLY

(M) (-2) BOX. MAY BE MADE FROM .051 AL. ALL. SH'T. 52S0 SPEC. 47A11 TEMP A. H.T. NONE, OR AL 35 1/2 H. SPEC. 47A4 CL 1/2 H., H.T. NONE.
FINISH. — 1P-16P OUTSIDE ONLY
ALL BENDS 1/16 R.

(-8) NOTE:- DO NOT FINISH HOLE MARGINS ON OUTSIDE FOR 3/32 RADIAL DISTANCE (N)

(M) (-3) COVER MAY BE MADE FROM .064 AL. ALL. SH'T 52S0 SPEC. 47A11 TEMP. A H.T. NONE, OR AL 35 1/2 H. SPEC. 47A4 CL 1/2 H. H.T. NONE. (R)
FINISH — 1P-16P OUTSIDE ONLY (P)

(-7) SHIELD 1/32 SHEET PHENOLIC LAM. 3 × 2 3/8 SPEC. 17P5 TYPE FBG. RIVET INSIDE COVER WITH AN430AD2 (N)

SUPPLIES & EQUIPMENT CLASSIFICATION			
LET	ALTERATION	DATE	BY
G	TRACED UP TO DATE	3-22-37	V.I.B.
H	-5 CHANGED TO 24ST MAT.	8-8-37	[redacted]
J	5 1/32 DIA. WAS 5 1/2	9/19/38	[redacted]
K	REVISED PBY-3 & PBY-4 REQS.	1-31-38	[redacted]
L	REMOVED -4-5-6 & -7 ON PBY-4	2-8-38	[redacted]
M	NOTE "-2 BOX--- NONE" WAS "-2 .040 AL ALL SH'T SPEC. M209 TYPE IT TEMP A" & "-3 COVER--- NONE" WAS "-3 .030 AL ALL. SH'T 24ST 47A10 COND T." WT. CH'G. REQ.	12-10-42	[redacted]
N	ADDED TO PAGE -8 & IN REVISED BLK. ADDED -8 FOR PBY-1 (SMALLER) WT CH'G REQ.	4-3-43	[redacted]
P	FINISH FOR -2, -3 & -8 "1P-16P OUTSIDE ONLY" WAS "P-2 AP" WT. CH'G REQ.	4/3-43	[redacted]

STENCIL BLACK BLOCK LETTERS

LIQUIDOMETER STROKE ADJUSTMENT RHEOSTAT

DRILL #18 (.169) 4 HOLES TO MATCH STOP NUTS ON BOX.
AN 515-8-12 SCREWS
AN960 D8 WASHER
28E1149 WASHER- FORCE THREAD ONTO SCREWS.

DRILL #18 (.169), 6 HOLES.

(REF) (-3) COVER

SPOT WELD 4 SPOTS EA. CORNER

Q3106 DB-32
A442-D3

3 1/32 DIA. 1 HOLE. FOR -2 ONLY (J)

* SHIPS 1-36 INCL. (0842-0877)
† SHIPS 37-66 INCL. (0878-0907)

SECTION A-A

(-6) SUPPORT .064 SHEET. ALUM. ALLOY 24ST. SPEC. 47A10 COND. T DEVELOPED LENGTH 2 1/8 3/16 BEND RADIUS. DRILL #10 (.193). 1 HOLE RIVETS AN442-D3 NO H.T FINISH Z-P-2 GP

(-5) SUPPORT .064 SHEET, ALUM. ALLOY 24ST SPEC. 47A10 COND T DEVELOPED LENGTH 1 23/32 3/16 BEND RADIUS. DRILL # 10 (.193), 1 HOLE RIVETS AN442D3 NO H.T. FINISH Z-P-2 AKV GP

(-4) GUARD 1/32 SHEET PHENOLIC MATERIAL 2 1/4 × 2 11/16 SPEC. 17-P-5 GR FBG DRILL #10 (.193) 2 HOLES TO MATCH -5 & -6 CLIPS

GP	GREEN ZONE
FINISH	[redacted]
Z	[redacted]
P	[redacted]
AP	[redacted]
C	[redacted]

-3	PBY-5	28E4006	1					28E1165-8	1
-3	28-5MC	28E4006	1					28E1165-7	1
-3	PBY-4	28E4006	1					28E1149	4
-3	PBY-6A	28E4006	1						
-3	28-5MB	28E4006	1						
-3	28-5MA	28E4006	1						
-3	28-5MN	28E4006	1	AN515-8-12	4			QG10MG-16	2
-6	↑	↑	1	AN935-10	2			Q3106DB-32	4
-5		28E4037	1	AN960D10	2			AC134-136-3	1
-7		↑	1	AN960D8	4			28E1165-6	1
-4	PBY-3	28E4036	1	AN430AD2	2			-5	1
	PBY-3	28E4018	1	AN345D10	2			-4	1
	PBY-2	28E1018	1	AN5200 10-14	2			-3	1
	PBY-1	28E1018	1	AN442-D3	12			28E1165-2	1
O.N.	MODEL	NEXT ASSY.	REQ.	ST'D PARTS	LH REQ.	RH REQ.	PART NO.	LH REQ.	RH REQ.

-3	28-5MC	28E4006	1						
-3	PBY-4	28E4006	1						
-3	PBY-6A	28E4006	1						
-3	28-5MB	28E4006	1						
-3	28-5MA	28E4006	1						
-3	28-5MN	28E4006	1						
-6			1						
-5		28E4037	1						
-7			1						
-4	PBY-3	28E4036	1						
	PBY-3	28E4018	1						
	PBY-2	28E1018	1						
	PBY-1	28E1018	1						
O.N.	MODEL	NEXT ASSY.	REQ.	ST'D PARTS	LH REQ.	RH REQ.	PART NO.	LH REQ.	RH REQ.

REPLACES [redacted]
REPLACED BY SHIP NO. 37
LIMIT ON DIMENSIONS UNLESS OTHERWISE SPECIFIED ± 1/2 AND ± .32 NOTED

[redacted] 6-15-36 DATE
.65 CALC. WT. ACT. WT.
SCALE 12" = 1 FT.
AC
NAVY NOTED MATERIAL

REQUIREMENTS PER AIRPLANE			MAT.	PARTS LIST PER ASSY.			
NOTED	NOTED		NOTED	ADAMS	MILLER		
SPEC.	HEAT TREAT		FINISH	9-22-36	3-10-37		
				DRAFT	CHECK	EXAM.	ENG.

CONSOLIDATED AIRCRAFT CORP. BUFFALO, N.Y.
STAMP PT. No. WHERE SHOWN

NAME
BOX ASSEM.- ELECT.- POWER JUNCTION

OPP. HAND
SIZE D 28E1165

SUPPLIES & EQUIPMENT CLASSIFICATION			
LET	ALTERATION	DATE	BY
A	TRACED	4-5-37	DEAN-CHAM.
B *	AN526DD1032-8 WAS AN520-10-6		
	AN366DF1032 WAS AN366-F1032	11-4-40	DEPT. STOCK
C	REV. REQ'TS./AIRP. WT. CHG. NEG.	10-30-42	SHANKLIN

E.O. 26085

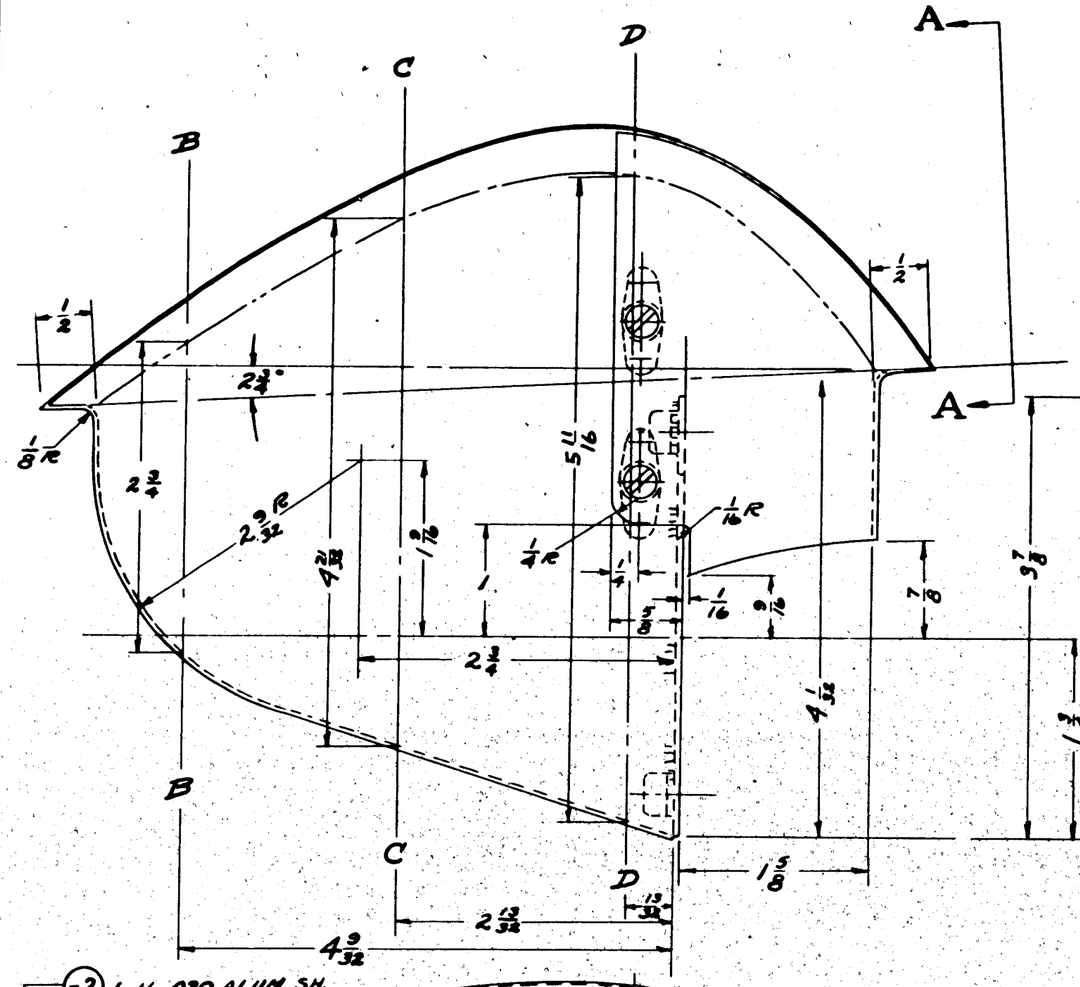

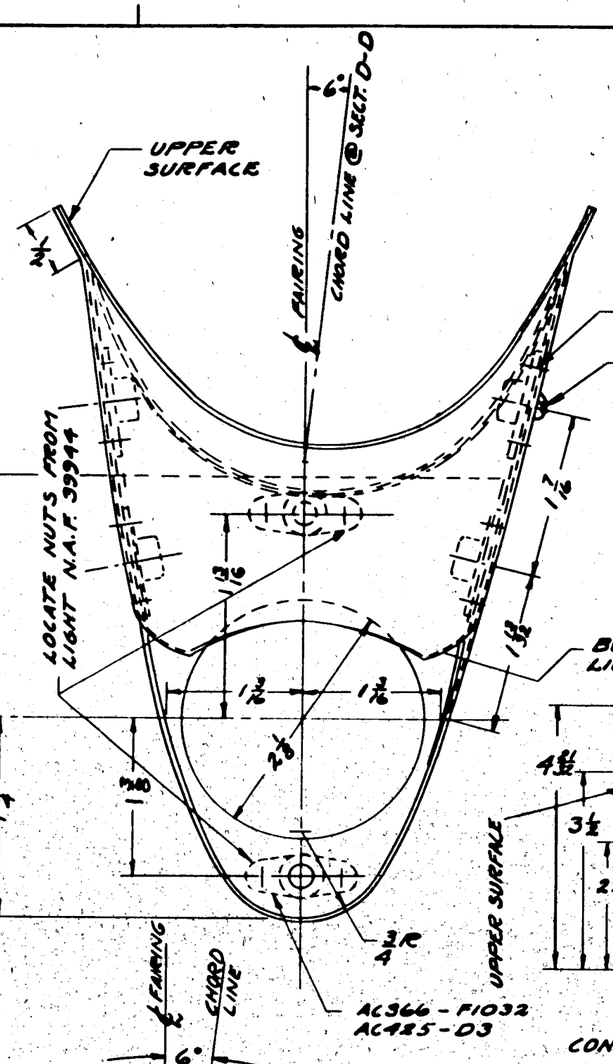

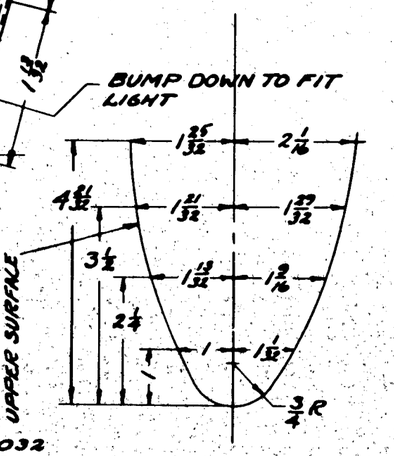

CONTOUR AT SEC. C-C

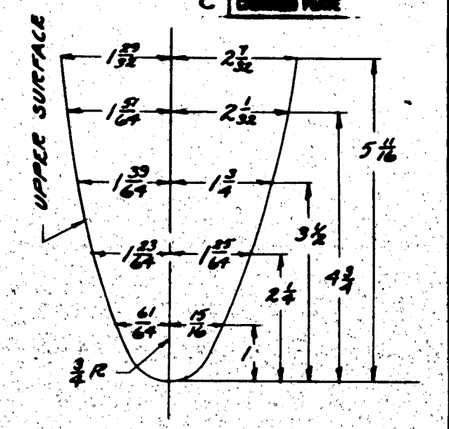

CONTOUR AT SECT. D-D

ALL CONTOUR DIMENSIONS ARE TO INSIDE OF SKIN

NOTE:

MAKE CHECK INSTALLATION ON FIRST FAIRING

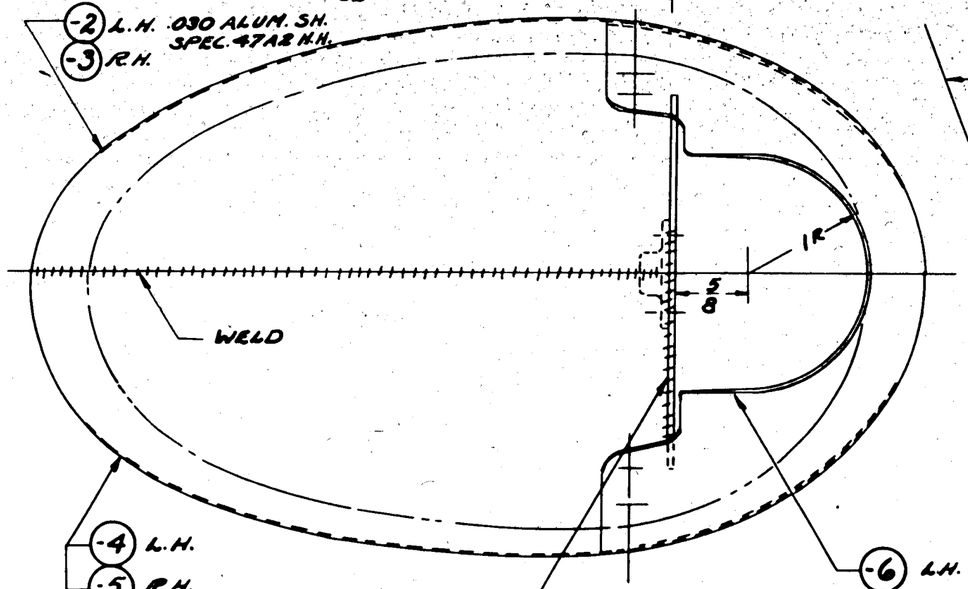

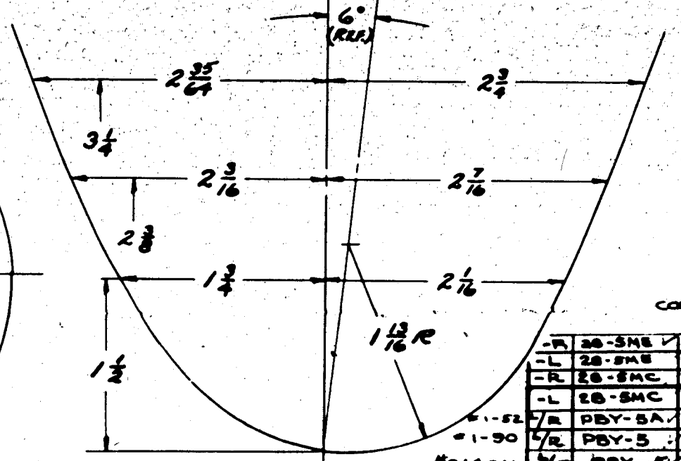

VIEW A-A
SHOWING INSIDE CONTOUR OF FAIRING

CONTOUR AT SEC. B-B

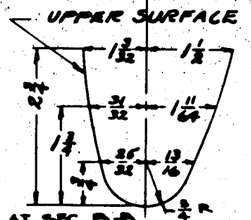

| | | |

SUPPLIES & EQUIPMENT CLASSIFICATION			
LET	ALTERATION	DATE	BY
C	TRACED TO DATE	3-28-37	[redacted]
D	[redacted]	6-24-37	[redacted]
E	-3 ASS'Y 1 REQ. ON 28E1166		
	WAS 2 REQ.	8-25-37	[redacted]
F	ADDED: -8 ASS'Y (REPLACES -3		
	ASS'Y FOR PBY-2 & PBY-3) SAME		
	AS -3 ASS'Y EXCEPT: -7 (2) WAS		
	(1), REMOVED -6 (1); 1 3/8 REF.		
	DIM. WAS 1 5/8 (ADDED) [illegible]	8-25-37	[redacted]
G	AN505-DB-9 WAS ---	6-19-41	EVANS
	AN505-DB-8 IN FACE & B/M.		

C.O. 5534

AVO ALL 28s

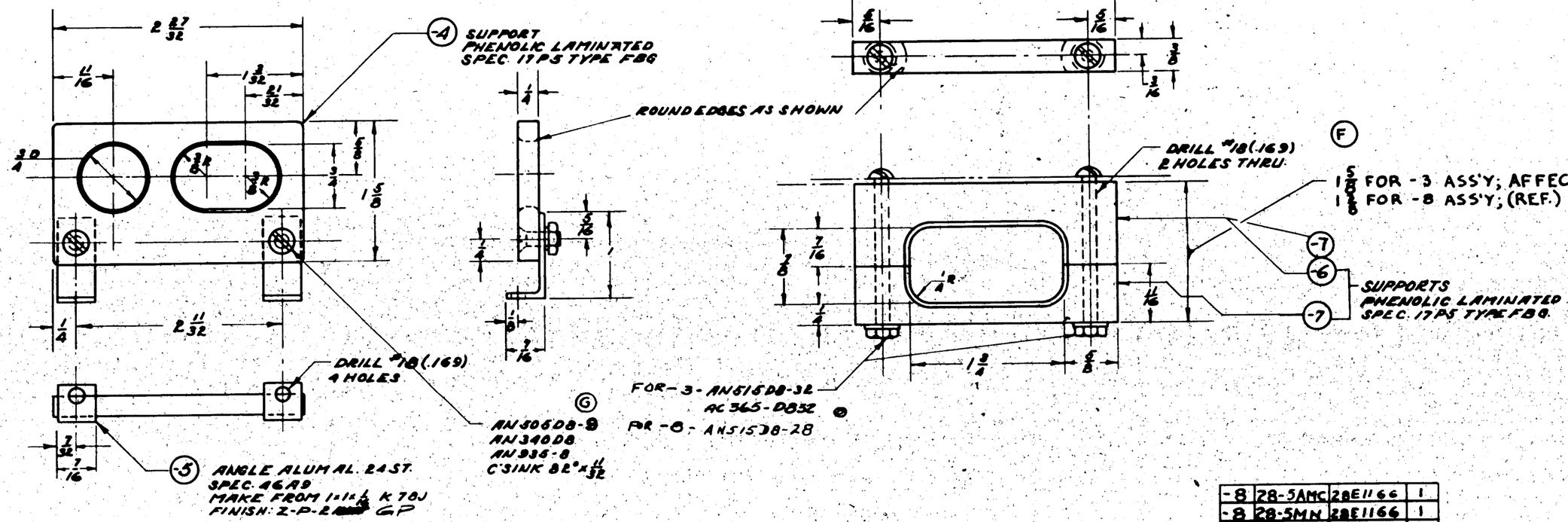

-8	28-5AMC	28E1166	1								
-8	28-5MN	28E1166	1								
-8	28-5ME	28E1166	1								
-8	28-5MC	28E1166	1								
-8	28-5MA	28E1166	1								
-8	PBY-5A	28E1166	1								
-8	PBY-5	28E1166	1	AN515DB-28			2				
-2	28-5AMC	28F1113	1	AN505DB-9	2						
-2	28-5MN	28F1113	1	AN515DB-32		2					
-2	28-5MC	28F1113	1	AN935-8	2						
				AN340DB	2						
-2	PBY-5A	28F1113	1	AC365D832		2	2				
-2	PBY-5	28F1113	1								
-8	PBY-4	28E1166	1								
-2	PBY-4	28F1113	1								
-8	PBY-3	28E1166	1								
-2	PBY-3	28F1113	1	-7		1	2				
-8	PBY-2	28E1166	1	-6		1					
-2	PBY-2	28F1113	1	-5	2						
-3	PBY-1	28E1166	2	28E1169-4	1						
-2	PBY-1	28F1113	1	ASS'Y →	-2	-3	-8				
O.H.	MODEL	NEXT ASSY.	REQ.	~~MISC PARTS~~	LH REQ.	RH REQ.	~~PART NO.~~			1 RH REQ.	

#1-52

F
E

G.P. GREEN PRIME
ISM CO[redacted]

REPLACES	APP[redacted] 8-14-36 DATE	REQUIREMENTS PER AIRPLANE	MAT.
REPLACED BY	CALC. WT. ACT. WT.		
LIMIT ON DIMENSIONS UNLESS OTHERWISE SPECIFIED ± .010	SCALE 12" = 1'-0"		
[redacted]	AC-		
	NAVY NOTED	NOTED NONE	NOTED
	MATERIAL	SPEC. HEAT TREAT	FINISH

PARTS LIST PER ASSY.

[redacted]	[redacted]	MAJOR
8-6-36	3-16-37	
DRAFT	CHECK	EXAM. ENG.

CONSOLIDATED AIRCRAFT CORP. BUFFALO, N. Y.
STAMP PT. No. WHERE SHOWN

NAME SUPPORT ASSY. ELEC.-WIRE

OPP. HAND

DWG. SIZE D 28E1169

SUPPLIES & EQUIPMENT CLASSIFICATION			
LET	ALTERATION	DATE	BY
B	TRACED TO DATE	3-22-37	[illegible]
C	ADDED PBY-2 & PBY-3 REQS.		
	FOR PBY-2 & -3: RELOCATE 2		
	#18 HOLES, 31/32 DIA. HOLE WAS		
	33/32 DIA.	10-20-37	[illegible]
D	CHANGED "FILL CORNERS WITH WELD"		
	TO "MAKE CORNERS CLOSE FIT."	1-29-38	[illegible]
E	ADDED PBY-4 REQ.	1-29-38	[illegible]
F	FOR PBY-2, 3 & -4: DESIGNATED	4-12-38	[illegible]
	ASSEM. AS -6 & BOX AS -5.	4-12-38	[illegible]
G	CREATED -7 P33'Y, R ADDED	9-12-41	[illegible]
	DIM'S. 3/16 & 5/16; ADDED		
	PARTS AN430-A2 &		
	Q3539-2 TO FACE OF		
	DWG. IN Lieu.		
H	11/16 FLANGE WAS 1/2, 9/16 SPOT DISTANCE	10-22-41	P. Smith
	WAS 1/2. -4: RELIEF HOLES SHOWN		
J	CHANGED MATERIAL TO 60 WAS 61		
	NO WT. CHG.	3-17-43	[illegible]

C.O. 5297A

C.O. 6814

C.O. 7274

E.O. 33708 PBY-5A 09-10

EDC # 12873

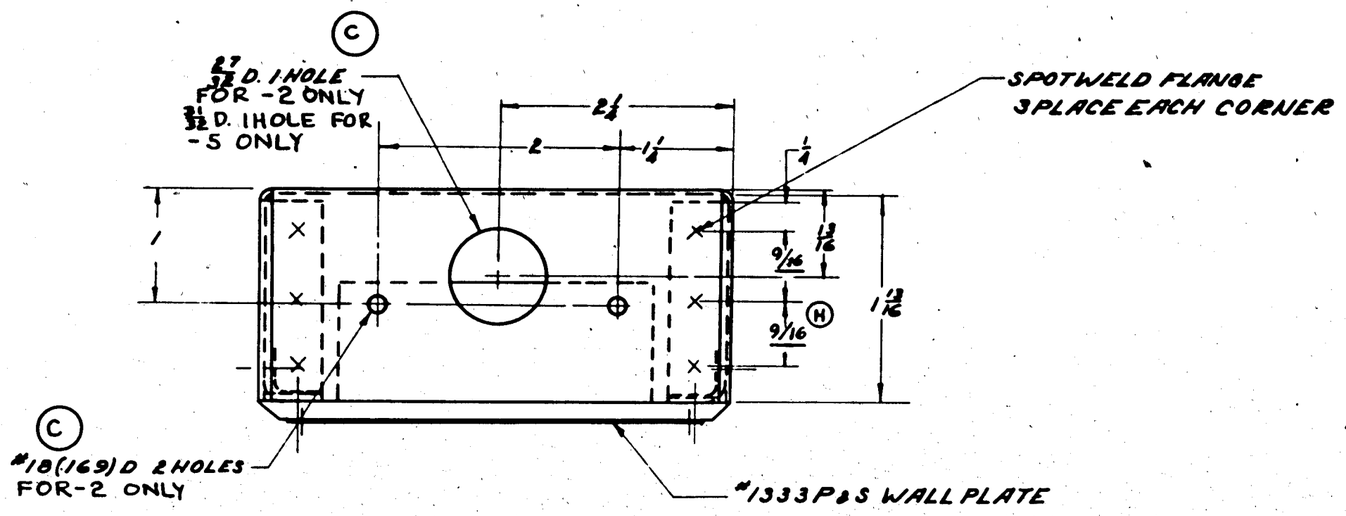

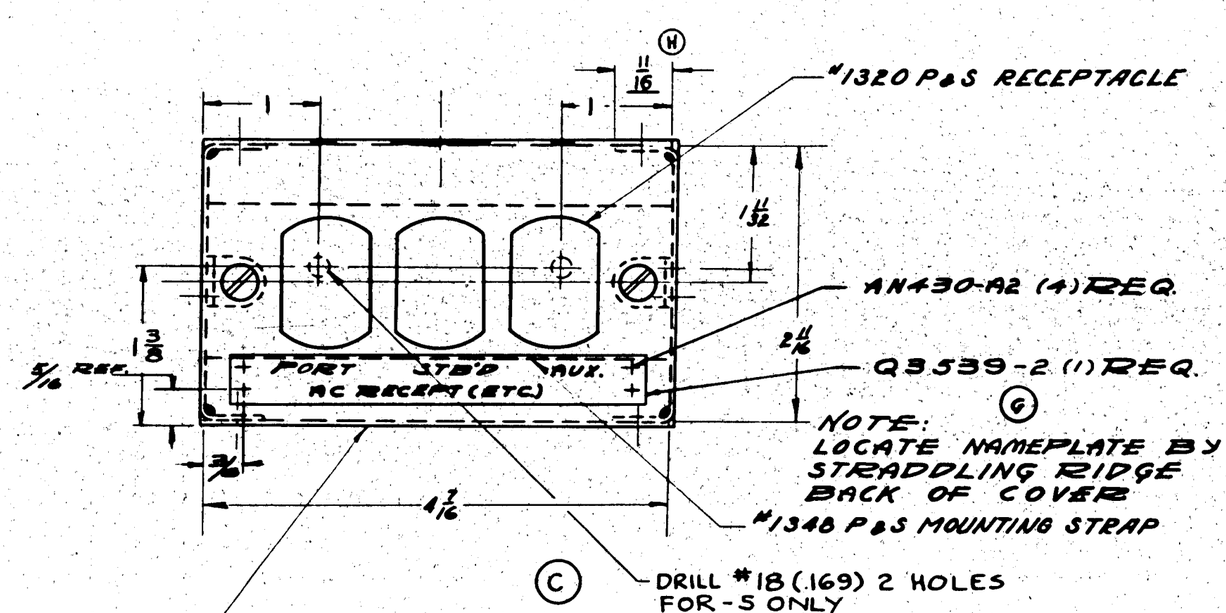

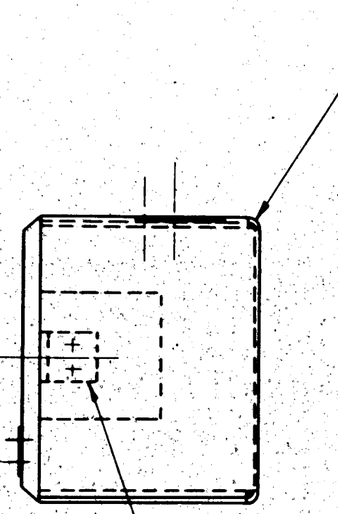

GP GREEN PRIME

C

F

-2 BOX .040 ALCLAD SHEET SPEC. 47A8 COND. A

J

FINISH. P-2 → GP

-5 BOX - SAME AS -2 EXCEPT HOLE SIZES & LOCATIONS

NOTE:-
ALL BENDS 1/8 R.

P&S PARTS MAY BE PURCHASED FROM GRAYBAR ELECTRIC COMPANY LOS ANGELES, CALIF.

SUPPLIES & EQUIPMENT CLASSIFICATION			
LET	ALTERATION	DATE	BY
A	TRACED	3-28-37	[illegible]
B	REMOVED "PORT" & CHANGED WIRING DIAG. CENTER OUTLET WAS WIRED TO PORT.	4-22-37	[illegible]
C	ADDED CIRCUIT NUMBERS TO WIRING DIAGRAM & REROUTED STBD. OUTLET CIRCUIT FOR PBY-2 & -3, ADDED WIRE SIZES & LENGTHS FOR PBY-2 & 3.		
D	RELOCATED 28E1213 BOX FOR PBY-2 & -3 & ADDED Q 3539 (1) NAF 213017-4 (2), NAF 213019-4 (2), NAF 213022-4 (2), NAF 213028-4 (2), & AN 430A2 (4)	10-20-37	[illegible]
E	FOR PBY-2, -3 & -4: DESIGNATED ASSEM. AS -3, REPLACED 28E 1213 BY 28E1213-6.	1-12-38	[illegible]
F	Q3539-2 REQ. ADDED FOR PBY-5	7-13-40	[illegible]

C.O. 5549

C.O. 5296

C.O. 7275

28E1123 (REF.)

AN931-9-13
$\frac{29}{32}$ D. 1 HOLE IN 28E1123 TO MATCH 28E1213

#18 (.169) D. 2 HOLES IN 28E1123 TO MATCH 28E1213

AN960D8

AN515-8-7
AN340-8
AN935-8

AUX. ST'BD. ST'BD.
A.C. OUTLETS NOT TO BE USED ON SAME GENERATOR WITH RADIO

28E1213 BOX (1)
FOR -0 INST. ONLY

NAF 213017-4 (2)
213019-4 (2)
213022-4 (2)
213028-4 (2)
ON -3 INST. ONLY

AN515-8-7 (2)
AN340-8 (2)
AN935-8 (2)
AN960D8 (2)

28E1213-6 BOX (1)
FOR -3 INST. ONLY

LOCATE SO THAT -2 COND. LIES APPROX. IN FORE & AFT VERT. PLANE

AN931-9-13 (1)
ON -3 INST. ONLY
$\frac{13}{16}$ D. 1 HOLE IN BLK'D WEB.

-4 ASSY. SAME AS -3 ASSY. EXCEPT Q3539-2 USED ON -4 ASS'Y. ONLY

Q3539 NAMEPLATE (1) ON -3 INST. ONLY, LOCATE ON 28E1213-4 BOX ASSEM.

AN430A2 (4) LOCATE BY STRADDLING RIDGE IN BACK OF COVER

NAF 39961 SWITCH (REF.)

-0 INST. ONLY

-3 INST. ONLY

(-2) $\frac{1}{2}$ O.D. x .028 AL. TUBE APPROX 12" LG. (1) ON -3 INST. ONLY

WIRES #836, 837, 838 ARE ALP #2, APPROX. 18" LONG.

-3 INST. ONLY

WIRING DIAGRAM FOR AC BOX INSTALLATION

NOTE ÷ WIRING OF SWITCH FOR PBY-5 SHOWN ON 28E5000

						NAF213028-4		2			
						213022-4		2			
						213019-4		2			
						NAF213017-4		2			
						AN430A2	4	4			
						AN931-9-13	1	1			
-4	PBY-5	28E4018	1			AN340-8	2	2	Q3539-2 ON -4 ASS'Y.		(1)
-3	PBY-4	28E4018	1						Q3539-0		1
-3	PBY-3	[illegible]	1			AN935-8	2	2	28E1231-2		1
-3	PBY-2	[illegible]	1			AN960D8	4	4	28E1213-6		1
-0	PBY-1	28E1018	1			AN515-8-7	2	2	28E1213	/	
							LH	RH		LH	RH
							-0 REQ.-	-3	PART NO.	-0 REQ.-	-3

REPLACES	3-22-37 APPROVED [illegible] DATE	O.H.	MODEL	NEXT ASSY.	REQ.
REPLACED BY	CALC. WT. [illegible] ACT. WT.				
LIMIT OR DIMENSIONS UNLESS OTHERWISE SPECIFIED ± 1/2	SCALE 12 IN = 1 FT - 0 IN	REQUIREMENTS PER AIRPLANE		MAT.	
[redacted]	AC				
	NAVY NOTED	NOTED	NONE	NONE	
	MATERIAL	SPEC.	HEAT TREAT	FINISH	

ST'D PARTS	PARTS LIST PER ASSY.
	MARKED [illegible]
	12-8-36 7-10-37
	DRAFT / CHECK / EXAM. / ENG.

CONSOLIDATED AIRCRAFT CORP. BUFFALO, N. Y.

STAMP PT. No. WHERE SHOWN

NAME INSTALLATION - ELEC. AC. OUTLET BOX.

OPP. HAND NONE

SIZE D

28E1231

CURTISS-WRIGHT CORP. BUFFALO

LET	ALTERATION	DATE	BY
Q	TRACED	6-19-43	
R	FOR -3 CALLOUT NOTE: "129 COPPER - - - CAD. PLATE" WAS ".125 COPPER - - - CAD. PLATE". NO WT CHG.	7-16-43	
S	ON FACE FOR -3 ".129 COPPER SHEET, SPEC. QQ-C-501, TEMPER, SOFT, LIGHT COLD ROLLED OR HARD." WAS ".129 COPPER PLATE, SPEC. 4762 HARD." NO WT. CHG.	9-21-43	

WING LIGHTS
29E3562-10 FOR-120 ASS'Y
29E3562-6 FOR-260 ASS'Y
28E5067-7 FOR-300 ASS'Y

(-5) FOR-120 ONLY
(-2) REF.

FORMATION LIGHTS
29E3562-7 FOR -250 ASS'Y
28E5067-9 FOR -200 ASS'Y
29E3562-10 FOR -121 ASS'Y

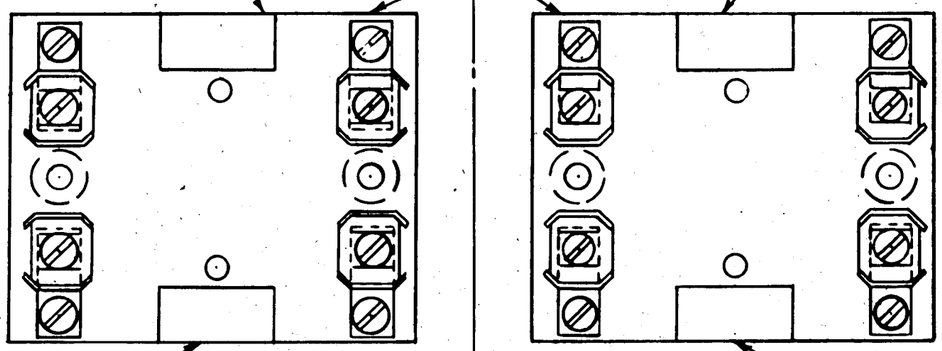

SECTION LIGHTS
29E3562-8 FOR-260 ASS'Y
28E5067-8 FOR-300 ASS'Y
29E3562-10 FOR-120 ASS'Y

℄ SHIP

TAIL LIGHTS
28E5067-6 FOR-200 ASS'Y
29E3562-9 FOR-250 ASS'Y
29E3562-10 FOR-121 ASS'Y

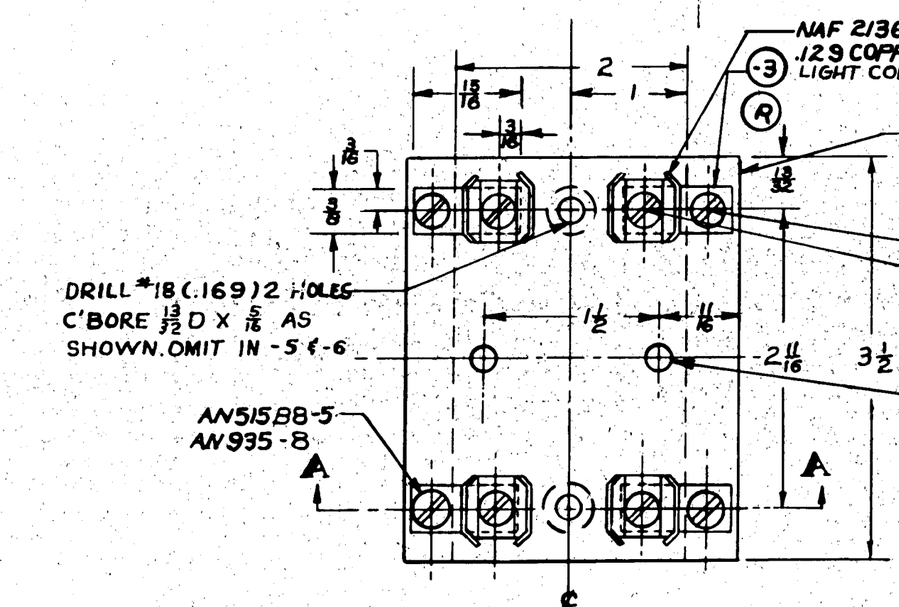

NOTES:-
1. SAND OFF GLAZE & GLUE-4 TO-2
2. IT IS PERMISSABLE TO USE THE FOLLOWING PARTS AS ALTERNATES - AN515-8-5 TO REPLACE AN515-B8-5
AN515-8-8 TO REPLACE AN515-B8-8
AN340-8 TO REPLACE AN340-B8
AN960-8 TO REPLACE AN960-B8

ASSY. DASH NO.	MODEL	NEXT ASSY.	REQ.
-260	PB2Y-3	29E3340	1
-250	PB2Y-3	29E3340	1
-250	PBY5-B	28E6123	1
-120	PBY5(SA	28E5752	1 EA
-260	PBY5(BA	28E5768	1 EA
-250	PBY5(SA	28E5768	1 EA
-300N	28-5MN(AMN	28E4001	1 EA
-200N	28-5MN(AMN	28E4001	1 EA
-300	28-5MA(ME	28E5527	1 EA
-200	28-5MA(ME	28E5527	1 EA
-300	28-5MC(AMC	28E4001	1 EA
-200	28-5MC(AMC	28E4001	1 EA
-260	PBY-5B	28E6123	1
-121	PBY-5B	28E6157	1
-300	PBY5(SA	28E4001	1 EA
-200	PBY5(SA	28E4001	1 EA

MCR 211 → CONT. 88476 PBY-5A
CONT. 91876 PBY-5
C-77713 *11 & ON
C-70496 & C-77713 *1 TO *10

REQUIREMENTS PER AIRPLANE

REPLACED 28E2024 OF 11-4-42 GALC. WT.
REPLACED BY ACT. WT.

UNLESS OTHERWISE SPECIFIED ± 1/32
SCALE 12"=1'-0"
STAMP PART NUMBER WHERE SHOWN

PART No	STOCK	MATERIAL	SPEC.	LH REQ.	LH REQ.	LH REQ.	LH REQ.	LH REQ.	LH REQ.	LH REQ.	LH REQ.	LH REQ.	LH REQ.
PARTS LIST PER ASSY.				-0	-260	-250	-250	-120	-260	-250	-300N	-200N	-300
-260													
-250													
-250				4									
-120				4									
-260				8									
-250				4									
-300N				4									
-200N				4									
-300													2
-200													2
-300								1					
-200								1					
-260								1					
-121								1					
-300								1					
-200								1					
-6				1	1	1	1	1	1	1			
-5				1	1	1	1	1	1	1			
-4				1	1	1	1	1	1	1			
-3				4	4	4	4	4	4	4			
-2				1	1	1	1	1	1	1			

A.C.		H.A.C.					
NAVY NOTED	NOTED	8-4-36	7-20-42				
HEAT TREAT	FINISH	DRAFT	CHECK	STRUCT	MAT	APPROV	NO.

NAME BLOCK ASS'Y ELEC. - RESISTOR
OPP. HAND NONE
CONSOLIDATED VULTEE AIRCRAFT CORP. SAN DIEGO DIVISION . . SAN DIEGO, CALIF.
DWG SIZE D
28E2024

28E2024 R

SUPPLIES & EQUIPMENT CLASSIFICATION			
LET	ALTERATION	DATE	BY
C	TRACED	2-9-38	W.J. KNALL
D	11/32 WAS 9/32 IN C'SK NOTE	6-20-40	[illegible]
E	-4 HINGE NOTE WAS AN251-10	"	"
F	E.O 23619 -4 HINGE REV. 8 3/32 JOGGLE ADD.	11-4-40	KOAG
G	TO DWG. FACE ADDED 1 #18 (.170) HOLE	7-16-41	[illegible]
H	ASSIGNED -6, -7 & -8 TO HINGE		
	PARTS. REMOVED -4 AS HINGE		
	CALLOUT	1-13-42	[illegible]
J	E.O A21279 REMOVED #18 (.170) HOLE &		
	DIM'S. FROM COVER. WT. CHG. NEG.	4-3-42	[illegible]
K	ADDED 1 C'S'K. 82° X 11/32" TO		
	NOTE, DRILL #18 (.170) ---" AND		
	SHOWED ADDITION ON DWG.	4-3-42	[illegible]

9 7/16

DRILL #28 (.140) 8 HOLES

MAKE 9 CUTOUTS AS SHOWN

AN442-D3 SEE END VIEW

2 7/16 — 2 5/8 — 2 7/16 — 1 3/8

ORIGINAL FACTORY HEAD MUST BE ON THIS SIDE OF PANEL

1 1/16 — 1/2 — 1 1/8 — 1 5/8

5 1/4 — 1/2 DIA. 9 HOLES

DRILL #28 (.140) 2 HOLES

15/16 DIA. 1 HOLE

5/8 — 30° — 1/8 — 21/32 — 1/4 — 5/16

7/8 — 7/8 — 7/8 — 7/8 — 7/8 — 7/8 — 7/8 — 7/8 — 1 5/8

25/32 — 25/32 — 25/32 — 25/32 — 25/32 — 25/32 — 25/32 — 25/32 — 1 1/4 — 1 5/32

2 — 29/32 — 1/4 — 1 5/32

AN442 D3 SEE END VIEW

DRILL #18 (.170) 1 HOLE

(3) SPACER .045 ALCLAD SHEET 24S SPEC. 47A8 COND. T 1 9/16 × 6 1/4 SPOTWELD TO -2 COVER 2 SPOTS AT ENDS

3/4 — 13/32 — 7/16 — 3/8 — 5/16

DRILL 7/32 DIA. 2 HOLES & SLOT AS SHOWN

DRILL #18 (.170) 8 HOLES THRU -2 & -3 & C'S'K. 82° X 11/32

1/2 DIA. 8 HOLES THRU -2 & -3

3/8 DIA. 1 HOLE

(2) COVER .064 ALCLAD SHEET 24S SPEC. 47A8 COND. T

1 5/32

1/4 — 1/4

AN425D3

AN425D3

DBE - DULL BLACK ENAMEL

FINISH CODE	
Z	ANODIC TREATMENT
P	P-27 PRIMER
AP	ALUMINIZED PRIMER
C	CADMIUM PLATE

NOTE: ALL DIMENSIONS MUST BE HELD

(-6) (-7) (-8) HINGE PARTS MAKE FROM AN251H-10 ALCLAD 24ST
CUT OFF AS SHOWN - BOTH ENDS
SPOTWELD TO -2 COVER - APPROX. 8 SPOTS 1" O.C.
PEEN ENDS OF HINGE TO LOCK PIN

DRILL #18 (.170) 8 HOLES THRU -2 & HINGE & C'S'K 82° × 11/32

FINISH NOTE:
- Z-P ALL PARTS ALL OVER -
- FRONT FACE OF -2 2 DBE -
- REAR OF PANEL & HINGE, 2 BLACK ASPHALT VARNISH -

| | | |

FOR -560, -550 ASS'YS ONLY.
1. .051 AL.AL. 5280 SPEC. 47A11 TEMP. A.
2. .051 AL. 35½ H. SPEC. 47A4 CL½ H. (Q)

FOR -0 & -20 ASS'YS (P)

CUTOUT IN -2-3-4 & -5 (N)

SPOTWELD ALL JOINTS APPROX. 3/4 O.C.

(6) .040 ALCLAD 24S SPEC. 47A8 COND. T.

BUTT WELD

(M) 23/32 DIA. HOLE ON -7 & -10 (P)

REMOVE FLANGE AT CORNERS

(5) FOR -550 & -560 ASS'YS

(3) .032 ALCLAD 24S SPEC. 47A8 COND. T

Q3106 DD52 (4 REQ.)
AN442 D3 (8 REQ.)
TO MATCH 28E2053

BOA 95185 (MOD. "17")

Q	1. .051 AL.AL. ---- TEMP. A 2. .051
	--- 35½ H WAS "0" --- COND. T

PBY-5, E.O. 39737

ALL MODELS. E.O. 22935 B

E.O. A34514

A 41744

SUPPLIES & EQUIPMENT CLASSIFICATION			
LET	ALTERATION	DATE	BY
E	TRACED	2-9-38	[illegible]
F	TABULATED L, L_2, A. ADDED -550 ASSEM. PBY-5 REQ	11-29-38	[illegible]
G	CORNER RADII ¼ WERE ⅛	3-29-41	[illegible]
H	CHANGE -2 & -4 WIDTH OF FLANGE TO 7/16 WAS ½.	4-11-41	GOLDMAN
J	ADD (-6) ⅛ BUTT TO DWG. ADDITION IN B.M.	4-11-41	GOLDMAN
K	IN B/M -6 TO 1 REQ. WAS (2) (G)	5-12-41	[illegible]
L	ADDED PBY-5A CONTRACT # 88476 REQUIREMENTS	11-28-41	[illegible]
M	CREATED -560 ASS'Y. ADDED -7 FOR -560 ASS'Y ONLY. [illegible]	4-14-42	GRAY
N	CUTOUT IN -2-3-4-5 WAS "IN -3-4-5 ONLY." WT. CHG. NEG.	6-3-43	[illegible]
P	CREATED -20 ASS'Y & CANCELED -0 ASS'Y FOR PBY-4, PBY-3, PBY-2, ADDED -7 & REMOVED -4 IN -550 ASS'Y. WT. CHG. NEG.	8-29-43	[illegible]

ASSY. NO.	L_1	L_2	A	
-0	14 3/4	14 12/16	3/4	(F)
-550	16 1/4	16 5/16	1 1/2	
-560	16 1/4	16 5/16	1 1/2	(M)
-20	14 3/4	14 12/16	3/4	

FINISH:
OUTSIDE: ANODIZE, P27 PRIMER 2 BLACK LACQUER
INSIDE: ANODIZE, P27 PRIMER 2 BLACK ASPHALT VARNISH

C. #88476 → -550 PBY-5A 28E5163 1
C. #77713 → -560 PBY-5A 28E5015 1
C. #91876 → -560 PBY-5 28E5758 1

FINISH: OUTSIDE: Z-P-28LE
INSIDE: Z-P-28AV
C-70496 → -550 PBY-5 28E5018 1
CONTRACT 70496 → 550 PBY-5A 28E5015 1

O.H.	MODEL	NEXT ASSY.	REQ.	ST'D PARTS	LH REQ.	RH REQ.	PART NO.	LH REQ.	RH REQ.	LH REQ.	RH REQ.	LH REQ.	RH REQ.	LH REQ.	RH REQ.
-20	PBY-4	28E2050	1												
-20	PBY-5	28E2050	1												
-20	PBY-2	28E2050	1	AN442D3	8		Q3106 DD52	4	4	4	4				
							-10								
							-7								
							-6								
							-5								
							-3	1							
							-2	1							

REQUIREMENTS PER AIRPLANE	MAT.	PARTS LIST PER ASSY.	-0	-550	-560	-20
A C						
NAVY NOTED	NOTED	NONE	NOTED			
MATERIAL	SPEC.	HEAT TREAT	FINISH			

REPLACES — APPROVED RCW 2-9-38 DATE
REPLACED BY — CALC. WT. .74 ACT. WT.
LIMIT ON DIMENSIONS UNLESS ± OTHERWISE SPECIFIED — 1/32
SCALE 12"=1'0"

[redacted]

DRAFT 2-6-37 — CHECK McCoy 2-6-37 — EXAM. Hudgens — ENG. R

CONSOLIDATED AIRCRAFT CORP. SAN DIEGO, CALIF.
STAMP PT. NO. WHERE SHOWN

NAME BOX ASS'Y - ELEC. - PILOT'S SIGNAL SYSTEM

OPP. HAND —

SIZE D — 28E2051

PRINTED ON [illegible] CLOTH

LET	ALTERATION	DATE	BY
L	TRACED	6-24-43	[illegible]

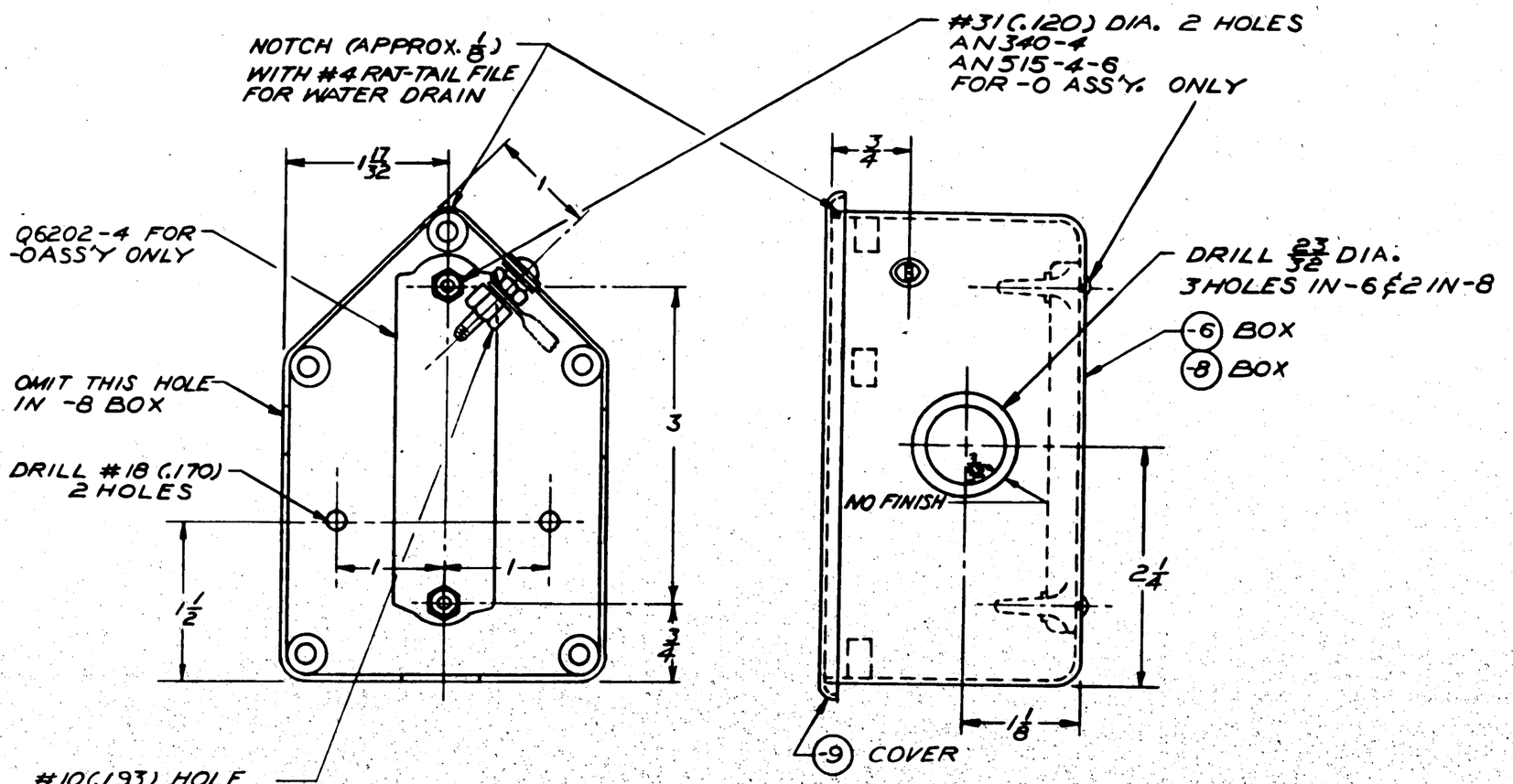

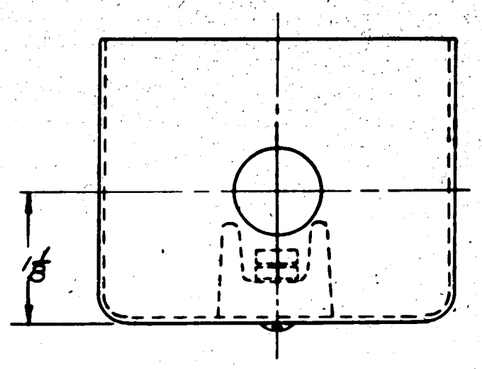

NOTES ~
1. DO NOT FINISH HOLE MARGINS ON OUTSIDE FOR 3/32 RADIAL DISTANCE.
2. SHELLAC 28E5212-6 TO INSIDE OF COVER 28E2073-9 & COVER WITH SHELLAC. FOR CONT. # 91876 PBY-5 ONLY.
3. MAKE -6 & -8 BOX & COVER -9 FROM NAF 39923-1 BOX ASS'Y.

FINISH CODE	
Z	ANODIC TREATMENT
P	P-27 PRIMER
GP	GREEN PRIMER
C	CADMIUM PLATE

ASSY. DASH NO.	MODEL	NEXT ASSY.	REQ.
ALL -560 70496 & 91876 thru -50	PBY-5A	28E5720	1
-0	PBY-5	28E1020	1
	PBY-4	28E1020	1
	PBY-3	28E1020	1
	PBY-2	28E1020	1

REQUIREMENTS PER AIRPLANE

REPLACES 28E2073 of dash [illegible] | .50 CALC. WT.

REPLACED BY | ACT. WT.

UNLESS OTHERWISE SPECIFIED DIMENSIONS ARE SUBJECT TO A TOLERANCE OF ± 1/32 | SCALE 12" = 1'-0"

STAMP PART NUMBER WHERE SHOWN

PART No.	STOCK	MATERIAL	SPEC.	-0 REQ.	-560 REQ.	-3 REQ.	-4 REQ.	-5 REQ.
28E5212-6				1				
Q7102AL10				2				
Q6202-4				1				
AC365-1032				1				
AN526-1032-12				1				
AN960-C10				1				
AN315-3R				1				
AN935-10				1				
AN515-4-6				2				
AN340-4				2				
-9	NOTED	NOTED	NOTED	1	1			
-8					1			
-6				1				

PARTS LIST PER ASSY.

A C		LESSAP		HINKLEY		LCW
NAVY NONE	P-GP	2-18-37	McCABE		2-	R
HEAT TREAT	FINISH	DRAFT	CHECK	EXAM	MAT	APPROV	ENG.

NAME BOX ASSEM. - ELEC. - INTERPHONE JUNCTION

OPP. HAND

CONSOLIDATED VULTEE AIRCRAFT CORP. SAN DIEGO DIVISION . . SAN DIEGO, CALIF.

DWG. SIZE D | 28E2073

R 28E2073

SUPPLIES & EQUIPMENT CLASSIFICATION			
LET	ALTERATION	DATE	BY
A	TRACED	2-11-38	[redacted]
B	CREATED -2 ASS'T #		
	ADDED 23/32 D., 15/32 D		
	HOLES.	4-11-41	HORSLEY
C	ADDED (2) Q6202-3 (2) 28E1109-OTHER		
	MATERIALS TO FACE OF DWG. 1 1/M	4-22-41	NELSON
D	RELOCATED Q-6202-3(2)	9-29	[redacted]

E.O. 24343A PBY-5

E.O. 37255A PBY-5

E.O. 37255-C PBY-5

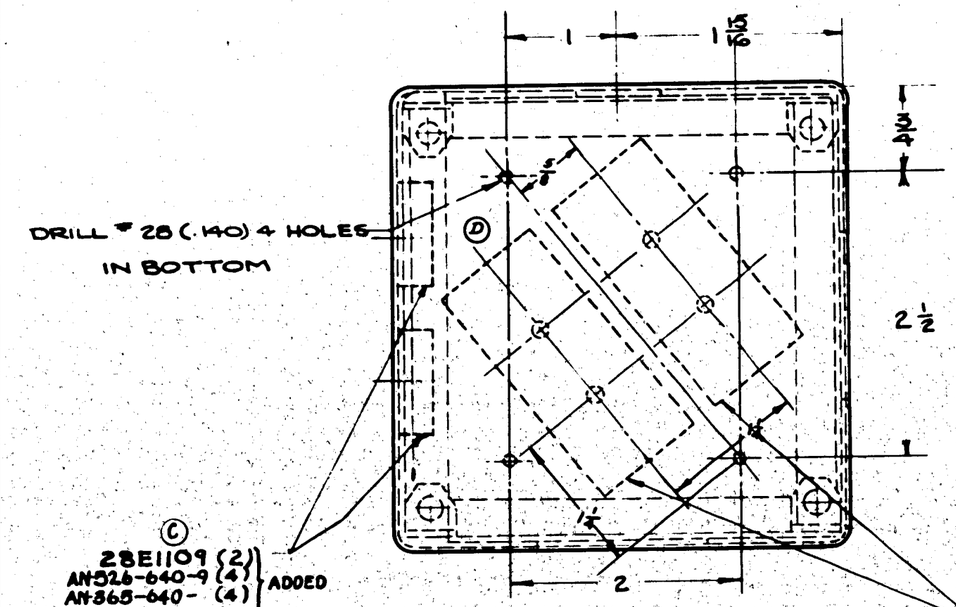

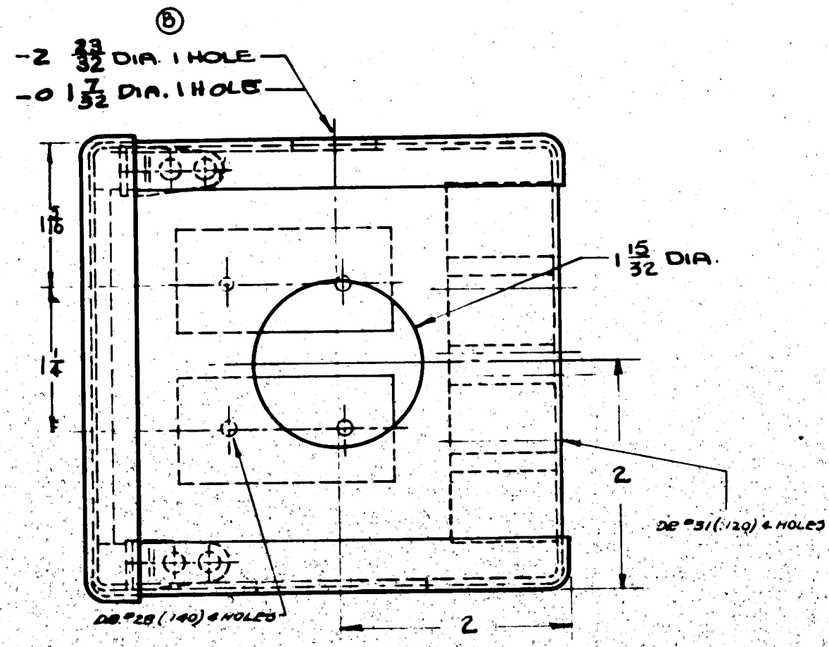

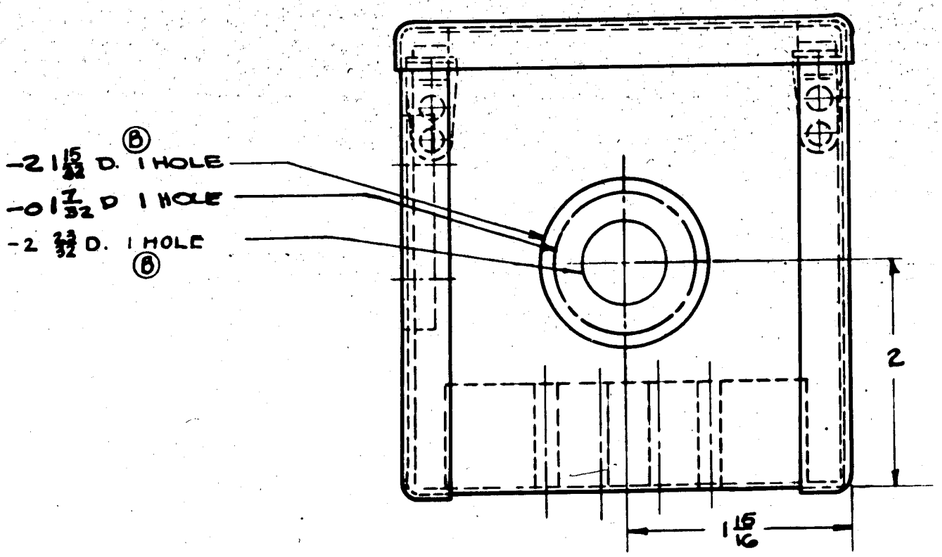

NOTES-

1. DO NOT FINISH CONDUIT HOLE MARGINS OUTSIDE ONLY FOR 5/32
2. REMOVE ANODIC FILM AROUND HOLES FOR 5/32

* EFFECTIVE ON PBY-5 SHIPS # 128, 130, 131, 133, 135, 136, 138, 140, 142, 242, 248 INC.

| | | |

SUPPLIES & EQUIPMENT CLASSIFICATION			
LET	ALTERATION	DATE	BY
A	TRACED	2-6-39	[illegible]
B	ADDED PBY-5 REQ'M'TS	11-27-39	Carlson
C	IN DRILL "22 (.157) 16 HOLES C'BORE ⅜ DIA FOR ⅛ DEEP" ⅛ WAS 3/32.	10-23-41	LARSON

B.A.C. 20083

DRILL #10(.193) 2 HOLES
C'SINK 82° X 11/32 DIA

DRILL #18 (.169) 2 HOLES
C'BORE ½ DIA X 3/16 DEEP

DRILL #10(193)
14 HOLES

DRILL #22 (.157) 16 HOLES
C'BORE ⅜ DIA. X ⅛ DEEP (C)

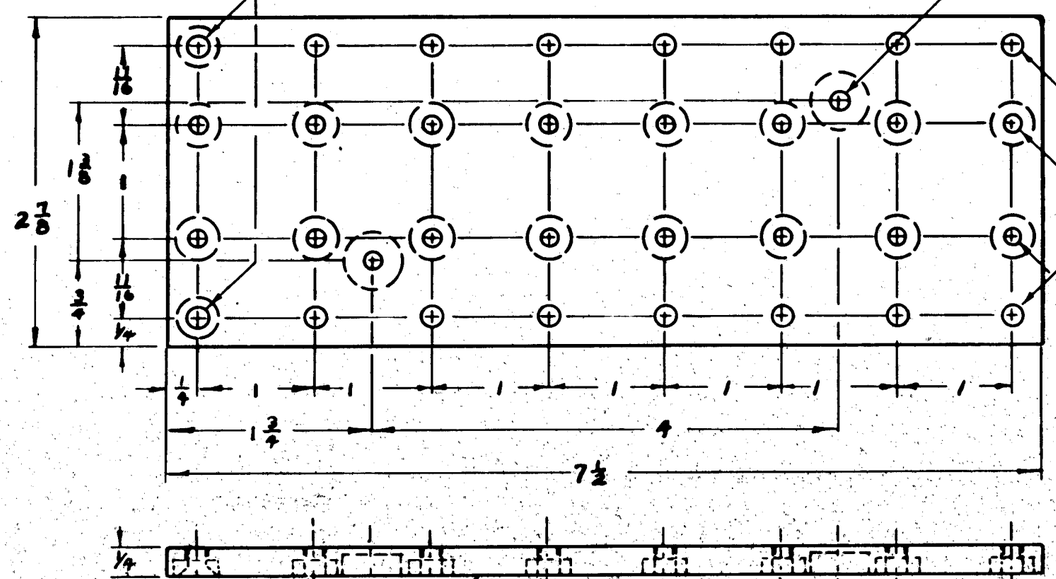

-2 PHENOLIC LAMINATED
SPEC. 17P5 TYPE PB6

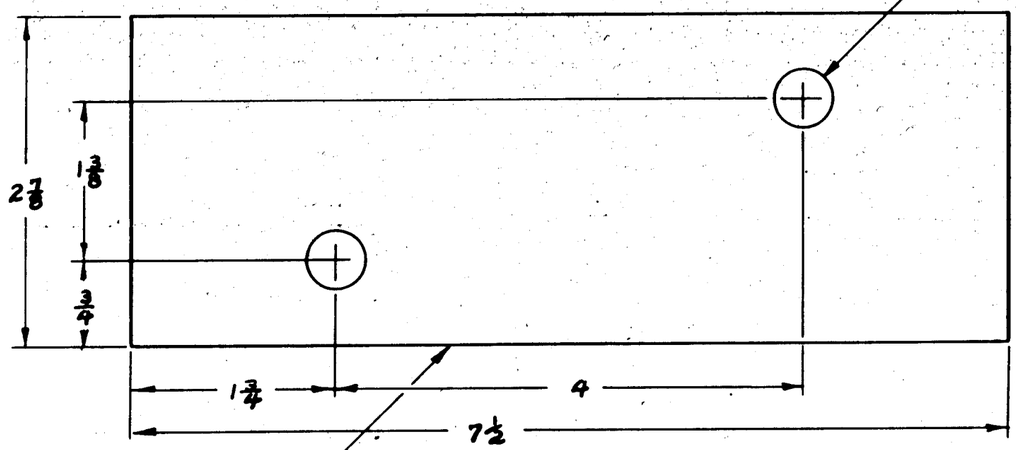

½ DIA. 2 HOLES
TO MATCH -2

-3 ½ THICK PHENOLIC LAMINATED
SPEC. 17P5 TYPE PB6

PART NO	WEIGHT
-3	.03
-2	.85

-3	PBY-5	28E5020	4
-2	PBY-5	28E5020	4
-3	PBY-4	28E4017	
-2	PBY-4	28E4017	

-3/8	28-SMC,MN	28E5020	4
-2/8	28-SMA,MC	28E5020	4
-2/8	28-SAMC	28E5020	4
(B) -3/8	PBY-5A	28E5020	4

REPLACES													
REPLACED BY													
LIMIT ON DIMENSIONS UNLESS OTHERWISE SPECIFIED ± .010													
APPROVED J.C.W. DATE 2-18-39													
CALC.WT.	ACT.WT.	O.H.	MODEL	NEXT ASSY.	REQ.	ST'D PARTS	LH REQ.	RH REQ.	PART NO.	LH REQ.	RH REQ.		
SCALE 12"=1'		REQUIREMENTS PER AIRPLANE				MAT.	PARTS LIST PER ASSY.						
AC							J.A. PHILLIPS	R.C.BOE	MOFFAT	[illegible]			
NAVY NOTED		NOTED	NONE			NONE	1-6-38	1-13-39					
MATERIAL		SPEC.	HEAT TREAT			FINISH	DRAFT	CHECK	EXAM.	ENG.			

CONSOLIDATED AIRCRAFT CORP. BUFFALO, N. Y.

STAMP PT. No. WHERE SHOWN

NAME BLOCK - ELEC. FUSE PANEL

OPP. HAND

DWG. SIZE D 28E4022

SULLIVAN-SCHREIBER CO., INC. BUFFALO

SUPPLIES & EQUIPMENT CLASSIFICATION			
LET.	ALTERATION	DATE	BY
B	TRACED	3-29-40	Lowney
C	REMOVED 28E080-7 BOX ASSY. & DETAILED PARTS ON THIS DWG.	10-28-40	Thornley
D	REMOVED -3 & ADDED -6 ON -2 ASSY. FOR PBY-4	"	"
E	ADDED -55 Ass'y FOR PBY-5	4/8/41	[illegible]
F	INTERCHANGED POSITIONS OF 28E4044-2 & -3	8-20-41	Ballard
G	ADDED, AN960-A8(4) NAF214067-1 (4), DRILL & TAP 4 PLACES ON 28E4043 COVER ON -55 ASSY. REMOVED AN515-8B-10 (4) & 28E1149 (4) FROM -55 ASSY	12-9-40	O. Berwick
H	1/4 R ON COR. OUTSIDE WAS 3/32 INSIDE 1-23-41 THIS CORR. ADD. -8, CHGD LAP JOINT TO BUTT		
J	HOLES INDICATED IN SIDES OF TANK	2-5-41	Berwick
K	MOVED SPOTWELD FROM CORNER TO CENTER & ADDED DIM TO PL OF BEND	4-16-41	Co Pa [illegible]
L	ADDED: SHOWN WAS 1/8 ON JOGGLE - 6	5-19-41	Quarnstrom
M	ADDED (2) 1/8 WATER DRAIN HOLES	7-24-41	[illegible]
N	ADDED 28E5795-6 & NOTE "SHELLAC ----- "88476-53 & ON" (NEG. WT. CHG.)	9-27-41	Wallace
P	CH'GD (-5) MAKE ---- SHOWN" WAS "(-8) 28E4043 BLANK --- DRILLING" & 28E4043 WAS (-5) 28E4043 (1) WAS (-8) REMOVED 28E4026-9 NO WLDG.	10-10-41	Howard

C.O. 7530

E.O. 34888

E.O. 35089 PBY-5

E.O. 35606 PBY-5

E.O. A1193

E.O. A34731

E.O. A39322

1 3/32 DIA. 2 HOLES ON -0 & -2 ASS'YS ONLY
1 15/32 D. - 2 HOLES IN -7 ON -55 ASS'Y ONLY

(K) 7 15/16 — 4 — 3 1/4 — 2

2 HOLES
IN -3 1 1/32 D.
IN -6 1 15/32
IN -7 1 3/32
ON -55 ASS'Y

(J) (L) 3/16, 5/32, 3/4, 5

(H) (G) .032 x 3/4 x 2 3/4 ALCLAD SHEET 1106T ZL

1 3/8, 2 3/4

(P) (5) MAKE FROM 28E4043 CUT OFF AS SHOWN

(6) ON -2 ASSY.

(D) (3) ON -0 ASSY .032 ALCLAD 24ST SPEC. 47A8 COND. T.

(7) ON -55 ASS'Y .032 ALCLAD 24ST SPEC. 47A8 COND'T

(N) NOTE *
SHELLAC 28E5795-6 TO INSIDE OF COVER 28E4043-5 AND COVER WITH SHELLAC FOR PBY-5A CONT. "88476-53 & ON.

1 1/2, 2 3/16, 3/8, 3/8, 2 3/16

SEE NOTE *

1 3/8, 1 1/2

NOTE: DO NOT FINISH CONDUIT HOLE MARGINS FOR 3/32 RADIAL DISTANCE OUTSIDE

(P) 28E4043

3/16

SPOTWELD APPROX. 1" C.-C. ALL AROUND

7/8, 13/16, 19/32, 3 5/8, 5 3/16

1/4 R

.882, .874

11/32, 1/8 (APPROX.), 1/8 (APPROX.), 1/16

6 1/16, 15/16

18 (.169) DIA. 4 HOLES

18 (.169) DIA. 4 HOLES TO MATCH BLOCKS AN515-D8-5 AN960 D8 AN935-8

DRILL 1/8 2 PLACES FOR WATER DRAIN

(F) 28E4044-3 BLOCK

(F) 28E4044-2 BLOCK

Q3106 D832 (4)
AN515-D8-10 (4)
28E1149 (4)
AN442-D3 (8)
DRILL #18 (.169) 4 HOLES IN COVER
} FOR -0 & -2 ASS'YS

(G)

DRILL & TAP COVER FOR 8-32 (NC-2) THD, 4 PLACES
Q3106-D832 (4)
NAF214067-1 (4)
AN960-A8 (4)
AN442-D3 (8)
} FOR -55 ASS'Y ONLY

GP-GREEN PRIME

FINISH CODE	
Z	[illegible]
P	[illegible]
AP	[illegible] PRIME
C	[illegible]

† SEE NOTE *

															28E5795-6 †										
																-8									
-55	28-5NE	28E5547	1												28E4026-7										
-55	28-5AH	28E5547	1																						
-55	28-5MN	28E4014	1	AN960-A8			4	28E1149		4		4													
-55	28-5MC	28E4014	1	NAF214067-1			4								-3										
-55	28-5MN	28E4014	1	Q3106-D832	4	4		28E4044-2		1		1		1											
-55	28-5MC	28E4014	1	AN960-D8	4	4		28E4043		1		1		1											
-55	PBY-5	28E4014	1	AN935-8	4	4		28E4026-6				1		—											
-55	PBY-5A	28E4014	1	AN515-8B10	4	—		28E4026-5		1		1		1											
-2	PBY-2	28E4044	1	AN515-8B-5	4	4								—											
-0	PBY-3	28E4044	1	AN442-D3	8	8		28E4026-3		1				—											
O. H.	MODEL	NEXT ASSY.	REQ.	ST'D PARTS				PART NO.		LH REQ.	RH REQ.	LH REQ.	RH REQ.	LH REQ.	RH REQ.	LH REQ.	RH REQ.	LH REQ.	RH REQ.	LH REQ.	RH REQ.				
REQUIREMENTS PER AIRPLANE				MAT.		PARTS LIST PER ASSY.				-0		-2		-55											

#1-#117

REPLACES	APPROVED	DATE	
REPLACED BY	.75 CALC. WT.	ACT. WT.	
1/32 UNLESS OTHERWISE SPECIFIED ±	12" = 1'-0" SCALE		

A C				Alloy	Material R
NAVY NOTED	NOTED	NONE	P-2 GP	H4-36	
MATERIAL	SPEC.	HEAT TREAT	FINISH	DRAFT	CHECK EXAM. ENG.

CONSOLIDATED AIRCRAFT CORP.
SAN DIEGO, CALIF.
STAMP PT. NO. WHERE SHOWN

NAME: BOX. ASS'Y. ELEC. WIRE DC. JUNCTION

OPP. HAND

DWG. D SIZE 28E4026

LET	ALTERATION	DATE	BY

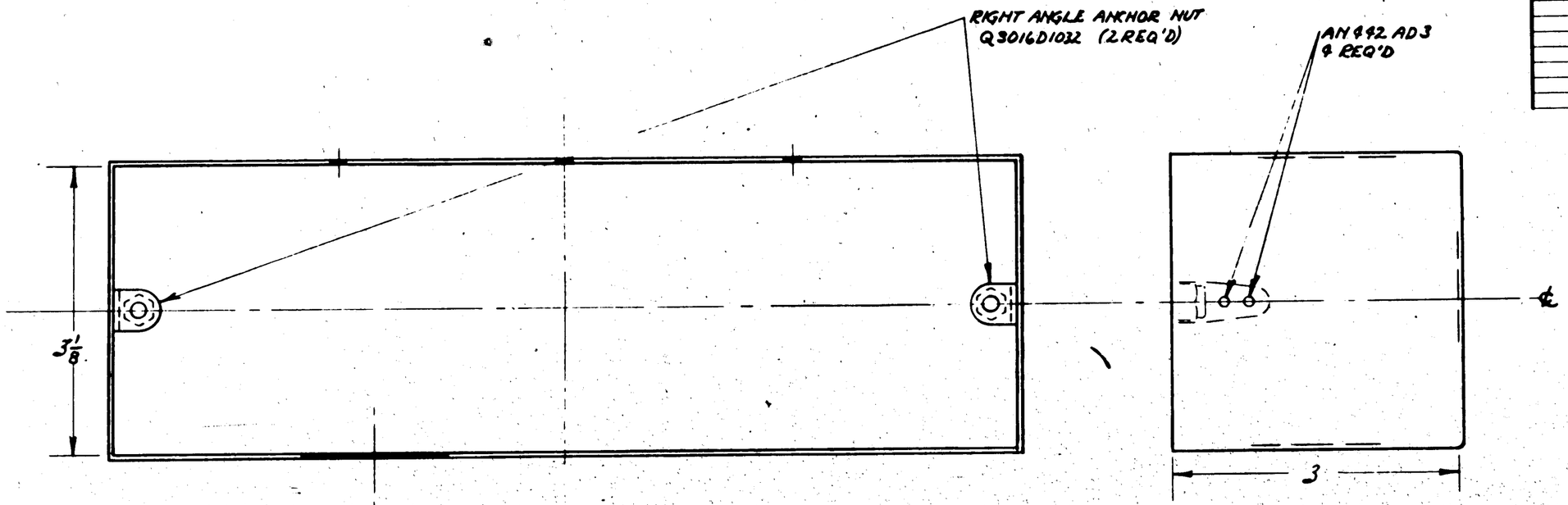

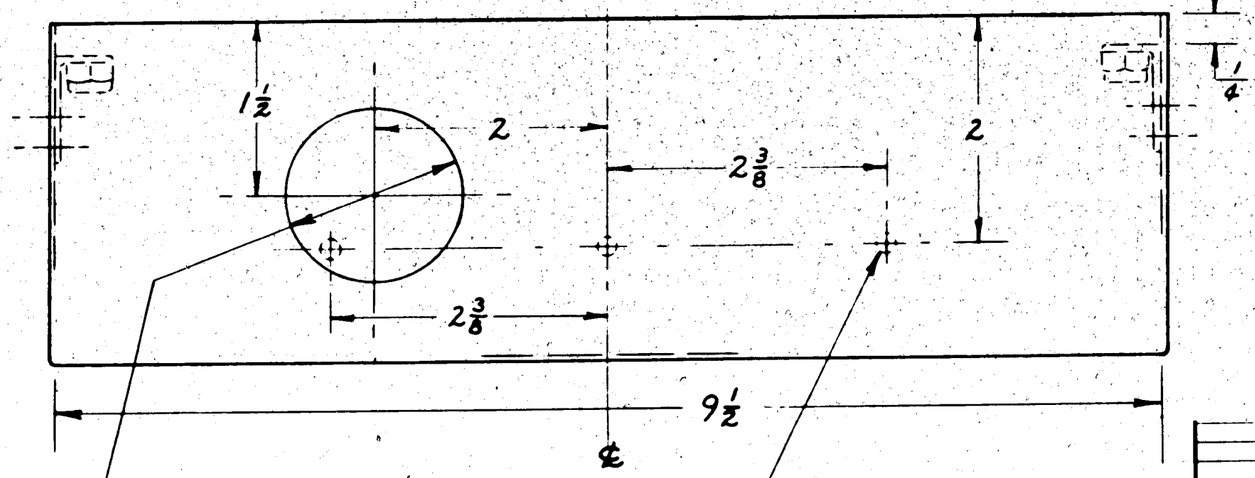

SHIPS 19-25 (BU2302-2313) INCL.
℄ 161-163 (BU2949-2951) INCL. ONLY

NOTE —
FORM FROM FLAT PATTERN ℄
TORCH WELD CORNERS
ALL BEND RADII 1/16
DRILL 1/8 DIA. RELIEF HOLES - 4 CORNERS

NOTE —
THIS BOX MUST FIT
28E4517 COVER (REF)

ASSY DASH NO.	MODEL	NEXT ASSY	REQ
-0	PER S.I. NOTED 28E4518		1

REQUIREMENTS PER AIRPLANE

REPLACES

REPLACED BY

CALC WT.

ACT WT

LIGHT ON DIMENSIONS UNLESS OTHERWISE SPECIFIED 1/32

SCALE 12" = 1'-0"

STAMP PART NUMBER WHERE SHOWN

AN 442 AD3 ℄

Q 3016 D1032 2

PART NO	STOCK	MATERIAL	SPEC.	LH REQ.	RH REQ.	LH REQ.	RH REQ.	LH REQ.	RH REQ.	LH REQ.	RH REQ.
28E4516 -6	.040 X 16½ X 10	AL. AL. 5250 H7A11 TEMPA	1	-0		-2		-3		-4	-5

PARTS LIST PER ASSY.

A C							
NAVY	P	7-20-40					
HEAT TREAT	FINISH	DRAFT	CHECK	STRUCT	MAT	APPROV.	ENG.

NAME BOX - ELEC.
PROP FEATHERING SWITCH

OPP. HAND

CONSOLIDATED AIRCRAFT CORP. SAN DIEGO, CALIF.

DWG. SIZE D

28E4516

LET	ALTERATION	DATE	BY

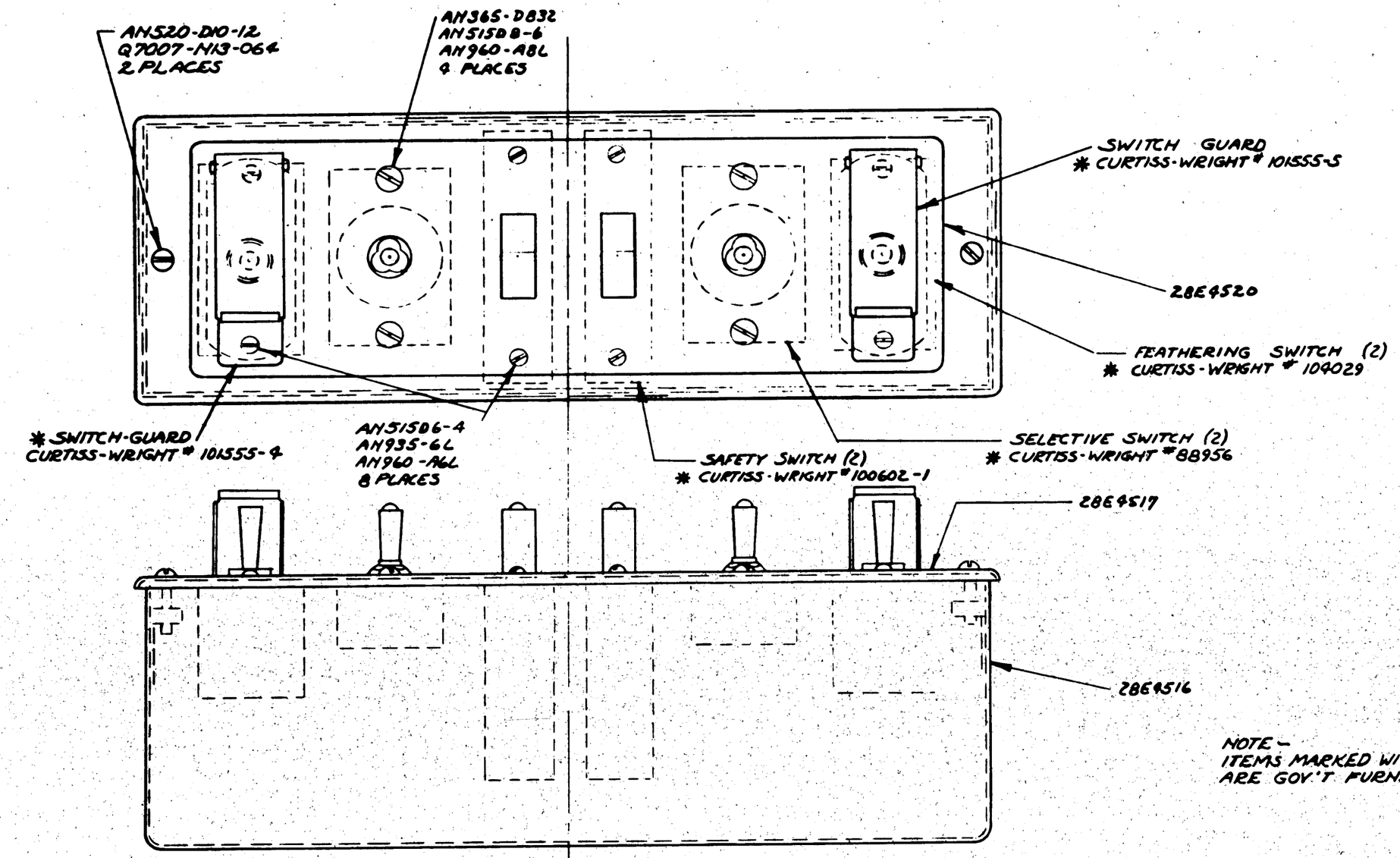

NOTE –
ITEMS MARKED WITH ASTERISK (*)
ARE GOV'T FURNISHED

SHIRS 14-25(BU 2302-2313)INCL. &
161-163(BU2449-2451) INCL. ONLY

PART NO.	STOCK	MATERIAL	SPEC.	LH REQ. -0	RH REQ. -0	LH REQ. -2	RH REQ. -2	LH REQ. -3	RH REQ. -3	LH REQ. -4	RH REQ. -4	LH REQ. -5	RH REQ. -5
CURTISS WRIGHT 101555-5	*			1									
CURTISS WRIGHT 101555-4	*				1								
AN520D10-12				4	4								
AN515D8-6				8	8								
AN515D6-4				8	8								
AN960-A8L				4	4								
AN960-A6L				8	8								
AN365-D832				4	4								
AN960-A316				4	4								
AN935-10				4	4								
AN935-6L				8	8								
CURTISS-WRIGHT 100602	*			2	2								
CURTISS-WRIGHT 104029	*			2	2								
CURTISS-WRIGHT 88956	*			2	2								
28E4520				1									
28E4517				1									
28E4516				1									

PARTS LIST PER ASSY.

ASSY. DASH NO.	MODEL	NEXT ASSY	REQ.
-0	PBY-5	28E2061	1

REQUIREMENTS PER AIRPLANE

REPLACES — CALC. WT.

REPLACED BY — ACT. WT.

LIGHT ON DIMENSIONS UNLESS OTHERWISE SPECIFIED ± 1/32 — SCALE 12" = 1'-0"

STAMP PART NUMBER WHERE SHOWN

A C		HEAN	[illegible]		[illegible]	
NAVY		8-1-40	8/2/41		8/24/41	8/26/41
HEAT TREAT	FINISH	DRAFT	CHECK	STRUCT	MAT	APPROV.

NAME ASSEM-ELEC
PROP FEATHERING SWITCH BOX

OPP. HAND

CONSOLIDATED AIRCRAFT CORP. SAN DIEGO, CALIF.

DWG. SIZE D

28E4518

R

LET	ALTERATION	DATE	BY
A	-7 BOX ASSY. REVISED AS SHOWN ON R.H. NOTE-MAY 1944		
	2332 (INCL.) & 2422-2427 (INCL.) WAS #4-85 (BU2502-2813)		
	INCL. & 161-169 (BU2449-2760) INCL. (FIELD DE DWG.)		
B	Q6202-7 RELOCATED IN BOX		

PBY5 E.O. 36218A

E.O. 13906 PBY-5

Q6202-7

-0 ASSEM. ONLY.

UNITED AIRCRAFT PRODUCTS BOX ASSEM. #91043

AN 515D4-7 (2)
AN 365D440 (2)
DRILL #31 (.120) 2 PLACES THRU. BOX
-0 ASSEM. ONLY

REMOVE FIN. 3/32 RADIALLY AROUND HOLE

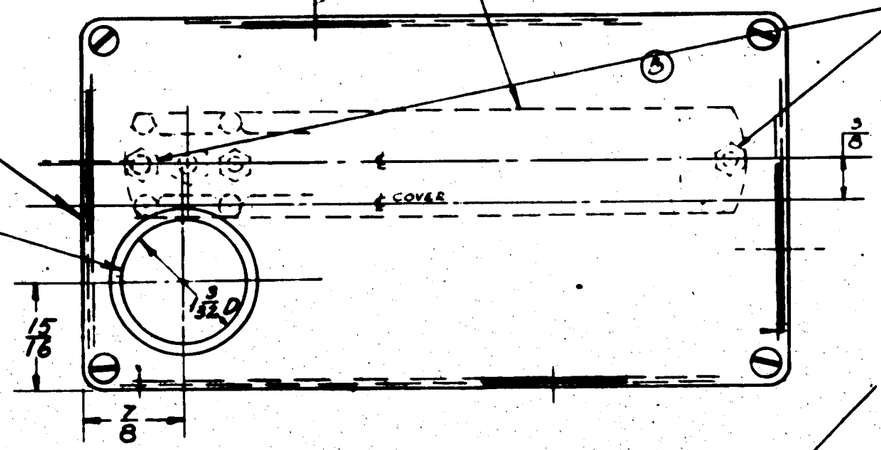

1 3/32 DIA. CUTOUT -7 ONLY

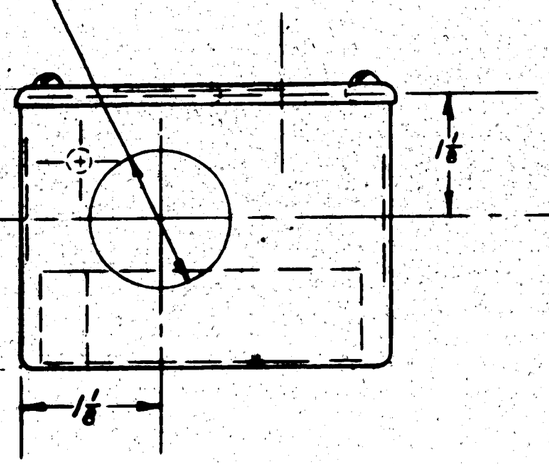

1 3/32 DIA. CUTOUT -6℄-7

1 3/32 DIA. CUTOUT -6℄-7

1 3/32 DIA. CUTOUT -6℄-7

#18(.169)

Ⓐ SHIPS-NAVY 2347-2355 INCL. ℄ 2422-2427 INCL.

-2	PBY-5 & Navy	28E4014	1	
-0	PBY-5 & Navy	28E4014	1	
ASSY. DASH NO.	MODEL	NEXT ASSY.	REQ.	

REQUIREMENTS PER AIRPLANE

REPLACES		2.16 CALC. WT.
REPLACED BY		ACT. WT.
UNLESS OTHERWISE SPECIFIED	SCALE	12"=1'-0"
+	1/32	

STAMP PART NUMBER WHERE SHOWN

PART No.	STOCK	MATERIAL	SPEC.	LH REQ. -0	RH REQ. -2	LH REQ. -3	RH REQ. -4	LH REQ. -5	RH REQ.
Q6202-7				2					
AN365D440				1					
AN515D4-7				1					
28E4525-7	U.A.P. #9 1043			1					
28E4525-6	U.A.P. #9 1043			2					
				2					
					1				
				1					

PARTS LIST PER ASSY.

A C		8-1-44					
NAVY		11-Nov	9-1-44		8/4U		
HEAT TREAT	FINISH	DRAFT	CHECK	STRUCT.	MAT		ASSY.

NAME BOX ASSEM.- ELEC- JUNCTION

OPP. HAND

CONSOLIDATED AIRCRAFT CORP. San Diego, Calif.

SIZE D

28E4525

LET	ALTERATION	DATE	BY

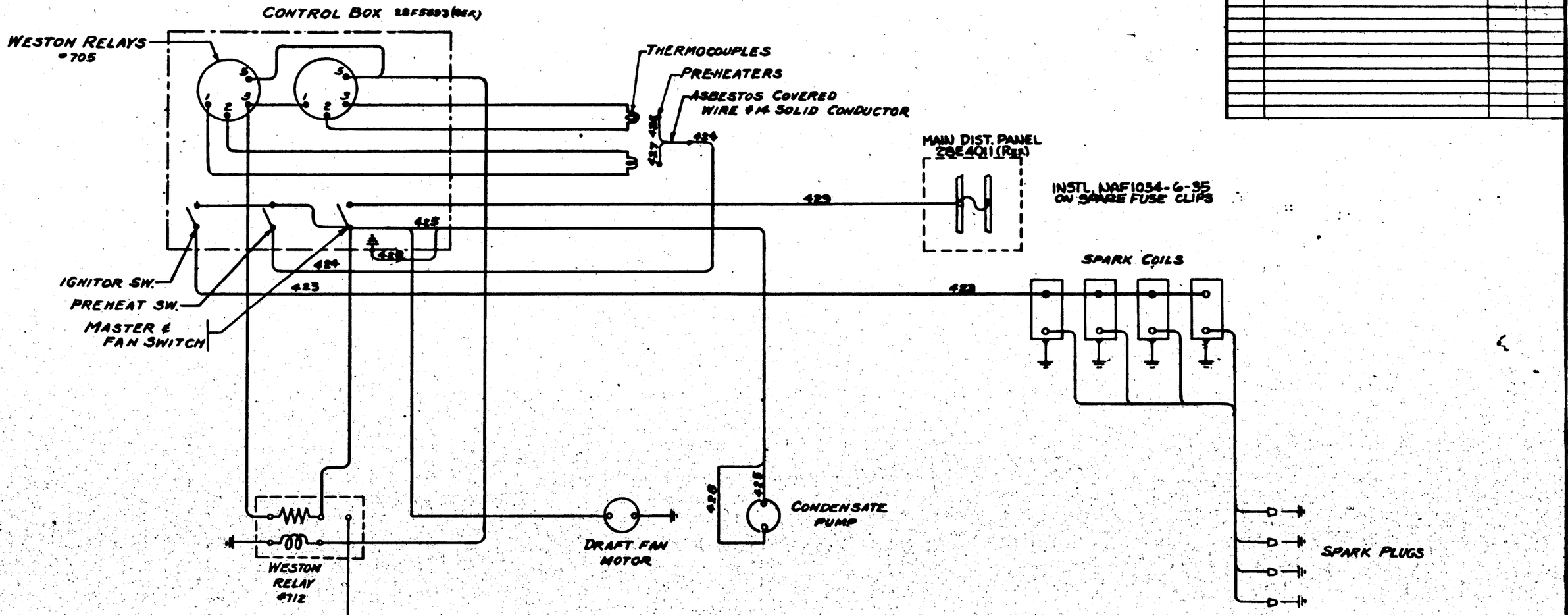

WIRE NO	GAGE	LEN. FT
423	14	4
424	14	3
425	14	4
426	14	2
427	14	2
428	18	4
429	12	11

NOTE:-
WIRES WITH NO NUMBERS ARE FURNISHED WITH EQUIPMENT
ASBESTOS COVERED WIRE (No. 424&425) FURNISHED BY C.A.C.

NOTE -
GROUND #426 TO HEATER CONTROL BOX 28F5693, CONNECT #425 & #426 TO BRUSH POLES INSIDE PUMP MOTOR

PER SALES ORDER #927-950
FOR PBY-5 MODELS

ASSY. DRAW. NO.	MODEL	NEXT ASSY.	REQ'D.
	PBY-5	28E5050	1

REQUIREMENTS PER AIRPLANE

REPLACES — CALC. WT.

REPLACED BY — ACT. WT.

LIGHT ON DIMENSIONS UNLESS OTHERWISE SPECIFIED — SCALE

STAMP PART NUMBER WHERE SHOWN

PART NO.	STOCK	MATERIAL	SPEC.
-6	WIRE AS NOTED		AN393A

PARTS PER ASSY.	-0	-2	-3	-4	-6
LG RH REQ.					
LG RH MFR.					
LG LH REQ.					
LG LH MFR.					
GR RH REQ.					
GR RH MFR.					
GR LH REQ.					
GR LH MFR.					
LG LH REQ.					
LG LH MFR.					

A C		MILLINGS	
NAVY —	—	4-10-41	
HEAT TREAT	FINISH	DRAFT	CHECK / STRUCT / MAT / APPROV / ENG.

NAME WIRING DIAGRAM - ELEC. HEATING BOILER - SOLAR

CONSOLIDATED AIRCRAFT CORP. San Diego, Calif.

OPP. NAND.

SIZE D

28E5000

SHEET 5 OF 5

LET	ALTERATION	DATE	BY
H	TRACED	2-4-42	
J	GNGD DWG NO FROM 28E5005 TO 28E5004	2-12-42	
K	ADD AN3044-3(1) AN3066-3 (1) AN960AB16L(2) TO -3 ASS'Y. 29E1132-6 WAS -0(-0 & -2 ASS'Y) & 29E1132-7 WAS -2(-3 ASS'Y.) W.T. CH 4 - NO Δ.	10-1-42	

E.O. AC1416

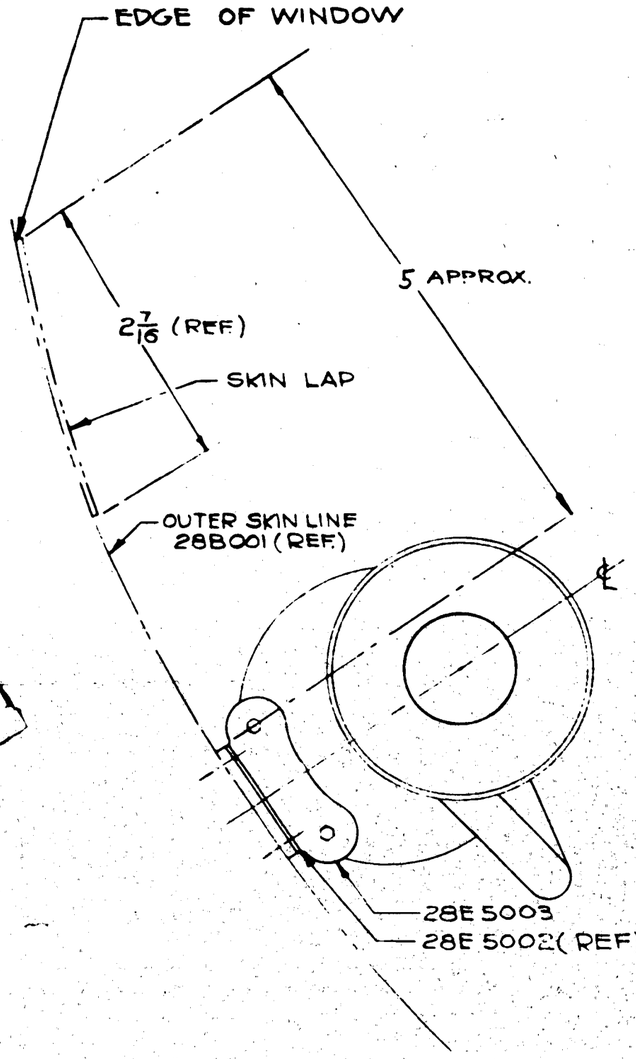

VIEW PORT SIDE LOOKING AFT

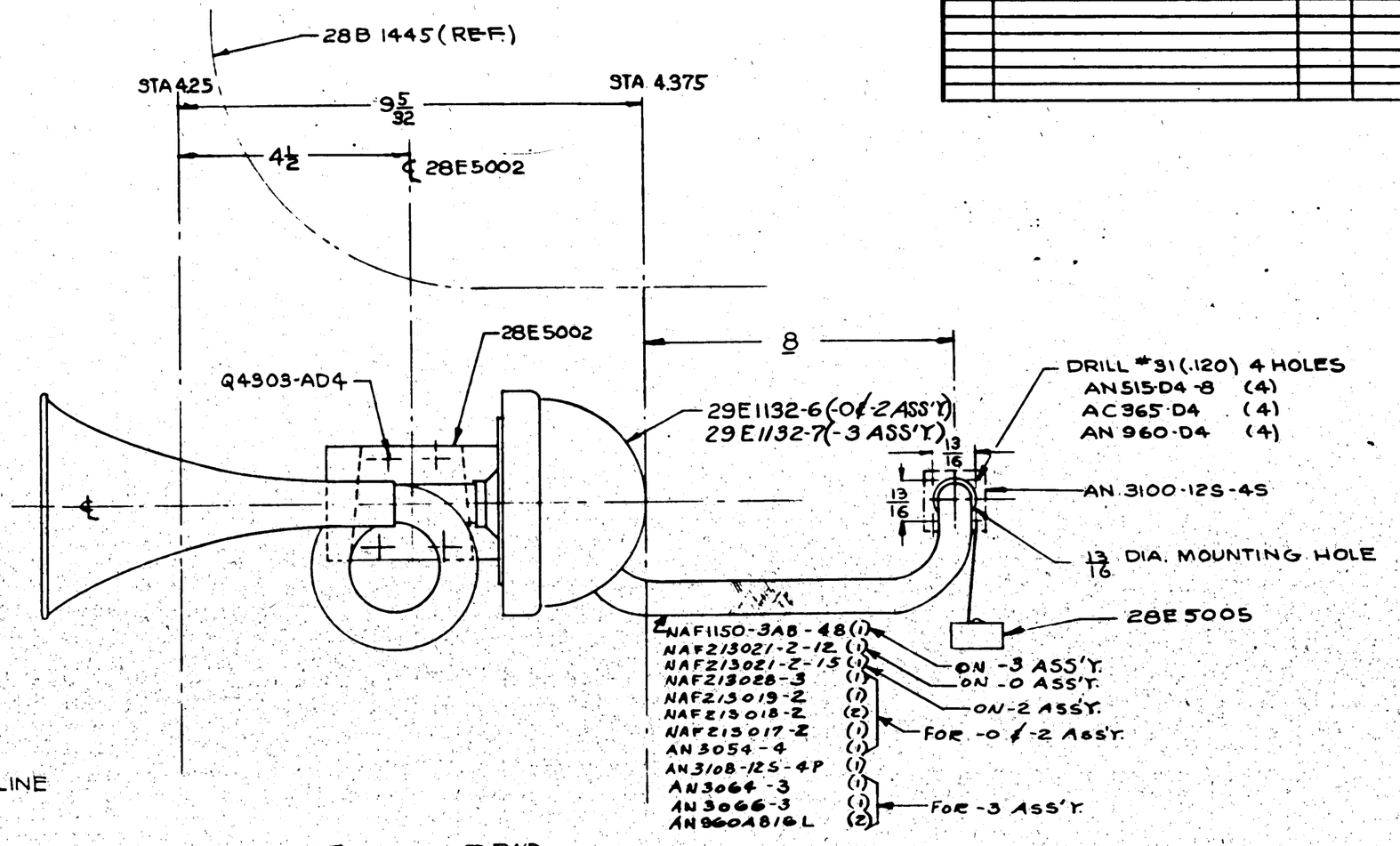

PORT SIDE LOOKING INBOARD
DIMENSIONS GIVEN ARE TRUE

NOTE:
Q4303AD4 RIVETS 'C'S'K' ON OUTSIDE FACE OF 28E5002

PART NO.	STOCK	MATERIAL	SPEC.	LH REQ. -0	RH REQ. -0	LH REQ. -2	RH REQ. -2	LH REQ. -3	RH REQ. -3	LH REQ. -4	RH REQ. -4	LH REQ. -5	RH REQ. -5
Q4303-AD4				4		4		4					
AN960AB16L								2					
NAF213028-3				1		1							
NAF213021-2 12" LONG				1									
NAF213019-2						1							
NAF213018-2				2		2							
NAF213017-2				1									
NAF1150-3AB-48								1					
NAF213021-2-15								1					
AN3066-3								1					
AN3108-12S-4P								1					
AN3100-12S-4S								1					
AN3054-4								1					
AN960 D4				4		4		4					
AN515D4-8				4		4		4					
AC365-D4				4		4		4					
AN3064-3								1					
29E1132-7								1					
29E1132-6				1		1							
28E5005				1		1		1					
28E5003				1		1		1					
28E5002				1		1		1					

PARTS LIST PER ASSY.

ASSY. BASIC NO.	MODEL	NEXT ASSY.	REQ'D.
-3	PBY-5B	28E6047	1
-2	PBY-5A	28E5663	1
-2	28-5AMN	28E5663	1
-2	28-5AMC	28E6663	1
-0	PBY-5	28E1013-550	1
-0	28-5MA	28E5647	1
-0	28-5MC	28E5647	1
-0	28-5MN	28E6647	1
-0	28-5ME	28E5647	1

REQUIREMENTS PER AIRPLANE

REPLACES — CALC. WT. 3.18#

REPLACED BY — ACT. WT.

LIMIT ON DIMENSIONS UNLESS OTHERWISE SPECIFIED ± 1/32 — SCALE 1" = 1"

STAMP PART NUMBER WHERE SHOWN

A.C.		Booher	
NAVY NONE	FINISHED ON DET'LS	5-21-40	5/28/40
HEAT TREAT	FINISH	DRAFT	CHECK

STRUCT	MAT	APPROV	ENG.
	5/21/40	5/29/40	R

NAME ASSEM & INSTALL ELEC. WARNING HORN OUTB'D

OPP. HAND

CONSOLIDATED AIRCRAFT CORP. SAN DIEGO, CALIF.

SIZE D — 28E5004

E-0A96539

LET	ALTERATION	DATE	BY
A	REMOVED "DRILL #18 (.169) 4 HOLES		
	ON INSTALL." ADDED #18 (.169) 2 HOLES		
	& SLOTS (2) WITH DIMS "4.32," 11/64 R		
	5/64 R. ALSO ADDED LOC. DIMS. 1 (2) &		
	3/8. WT. CHG. NEG.	1-14-42	WORMER

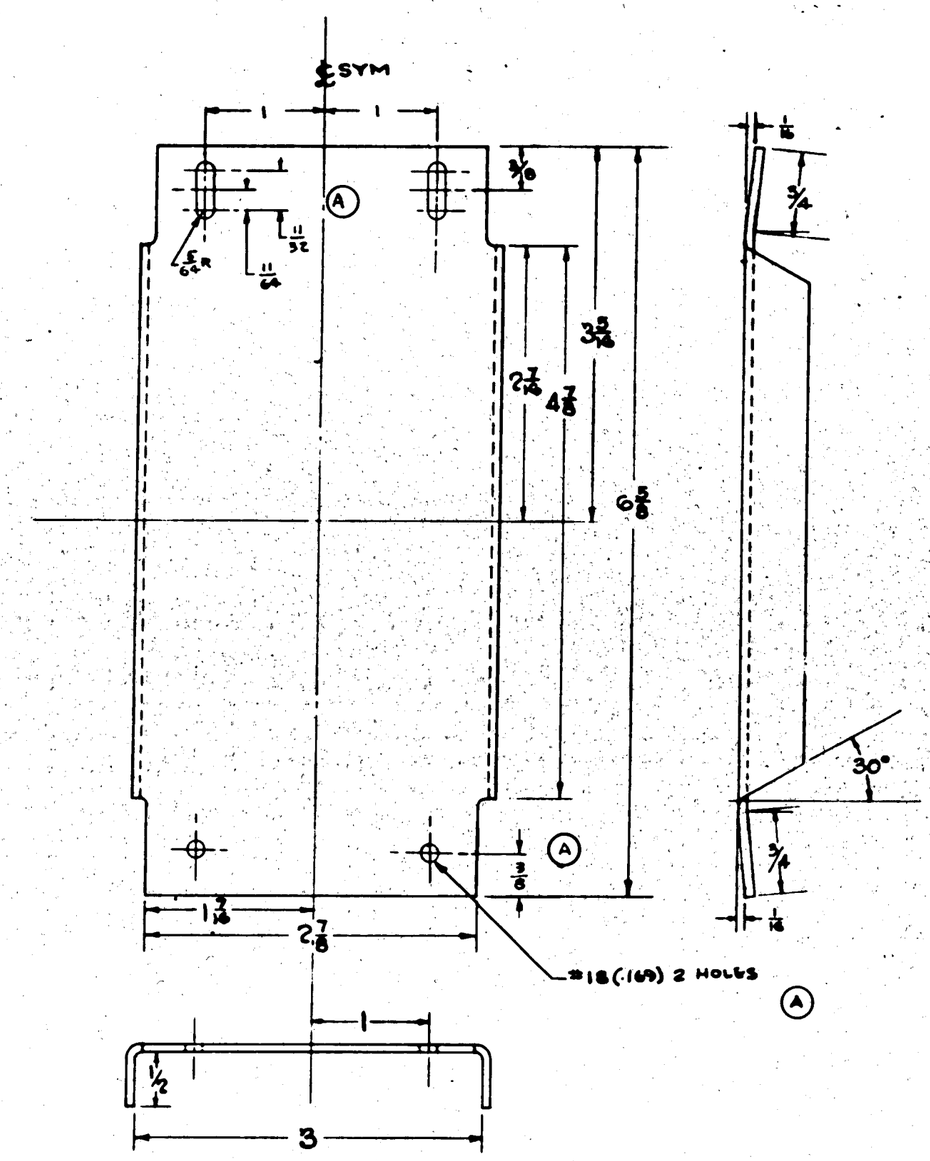

NOTE:
ALL RELIEF & BEND RADII 1/8 R

-0	28-5MN	28E5006	1
-0	28-5MC	28E5006	1
-0	PBY-5	28E5006	1
-0	28-5ME	28E5006	1
-0	28-5MA	28E5006	1
ASSY. DASH NO.	MODEL	NEXT ASSY.	REQ.

REQUIREMENTS PER AIRPLANE

REPLACES — GALS. WT.

REPLACED BY — ASY. WT.

SCALE 12" = 1'-0"

STAMP PART NUMBER WHERE SHOWN

PART No.	STOCK	MATERIAL	SPEC.	LH REQ. -0	RH REQ. -0	LH REQ. -2	RH REQ. -2	LH REQ. -3	RH REQ. -3	LH REQ. -4	RH REQ. -4	LH REQ. -5	RH REQ. -5
28E5006	.064 x 4 1/4 x 6 5/8	24ST. ALC. SHT.	47A8-T	1									

PARTS LIST PER ASSY.

AC							
NAVY NONE	Z-2P-AP	6-6-40	6-10-40		6/10/40	6-10-40	
HEAT TREAT	FINISH	DRAFT	CHECK	STRUCT.	MAT	APPROV.	ENG.

NAME BRACKET - ELEC. - JUNCTION BOX SUPPORT

OPP. HAND NONE

CONSOLIDATED AIRCRAFT CORP. SAN DIEGO, CALIF.

DWG. SIZE D

28E5006

LET	ALTERATION	DATE	BY
A	REVISION AND REVISED - RELOCATE [illegible]	10-29-40	[illegible]
B	ADDED DETAIL -3B.	1-30-41	[illegible]
	CALC. WT. .64 WAS .60		
C	BCHANGE CANCELLED -3A E.O. [illegible]	4-22-41	[illegible]
DM	AN 505-D8-10(4) & AN365-D832(4)		
	ADDED TO DR. & P/N	4-29-41	LARSON
E	ADDED "SHEET #1 OF 2" BELOW DWG. NO.	5-8-41	SELBY
F	ADDED REQ'D PER AIRPLANE PUR	8-18-41	WARD
	28-5ME, 28-5MN, 28-5MA, 28-5MC		
G	28E5074-8 WAS 28E5074 WT. CHANGE	7-8-42	[illegible]
H	CREATED -3 ASS'Y WT. CNG. NEG.	7-8-42	MURRAY
J	ADDED "3⅛ APPROX" & 2⅝ DIMS.		
	FOR -3 ASS'Y WT. CNG. NEG.	7-2-42	MURRAY

E.O. 23777 A&B
E.O. 29331 A
E.O. 38064
E.O. 38032
E.O. A 38014
E.O. A 27606
E.O. A 30315

28B1500-62 (REF)

28B1500-64 (REF)

Ⓗ
-0 ASS'Y:- 28E5036-0
-3 ASS'Y:- 28E5036-2

AN3102-12S-4S
AN515 D4-8
AN365 D440
AN960 D4

DRILL BLKH'D WEB TO MATCH BOX
DRILL #31 (.120) - 4 HOLES
DRILL 23/32 DIA. - 1 HOLE

13/16
9/32
1 1/32
15/16

A

A

Ⓓ
{AN505-D8-10(4)
{AC365-D832(4)

DRILL BLKH'D WEB TO MATCH WEDGE
DRILL #29 (.136) - 4 HOLES

3 1/8

28E5002

AN520 D10-8
AN365 D1032

Ⓒ
28E5074-8
Ⓖ

1 3/8 ON -0 ASS'Y
2 5/8 ON -3 ASS'Y
Ⓙ

5 1/2

Ⓙ
-0 ASS'Y:- 2⅝ APPROX.
3 ASS'Y:- 3⅜ APPROX.

℄ SHIP (REF.)

28B1504 (REF.)
28B1500-26 (REF.)

18 R (REF.)

SEE DWG. NO. BLOCK Ⓔ

13 3/16 (REF.) TO ℄ OF SHIP

2 11/16

3⅛ TRUE

Ⓕ

.072 (REF.)

28B1501-4 (REF.)

VIEW PORT SIDE BULKHEAD #5
LOOKING FORWARD

SECTION A-A

ASSY. DASH NO.	MODEL	NEXT ASSY	QTY
-3	PBY-5B	28E6047	1
-0	28-5MC	28E6047	1
-0	28-5MA	28E5647	1
-0	28-5MN	28E5647	1
-0	28-5ME	28E5647	1
-0	PBY-5	28E1013-550	1

REQUIREMENTS PER AIRPLANE

REPLACES 28E5007 OF 6-5-40 — CALC WT. .64
REPLACED BY — ACT WT.

UNLESS OTHERWISE SPECIFIED ± 1/32 — SCALE 12" = 1'-0"

STAMP PART NUMBER WHERE SHOWN

PART NO	STOCK	MATERIAL	SPEC	LH REQ. -0	RH REQ. -2	LH REQ. -3	RH REQ. -4	LH REQ. -5	RH
AN505-D8-10				4		4			
AC365-D832				4		4			
AN3102-12S-4S				1		1			
AN960-D4				4		4			
AN520-D10-8				2		2			
AN515-D4-8				4		4			
AN365-D1032				2		2			
AN365-D440				4		4			
28E6036-2						1			
28E5074-8				1		1			
28E5036-0				1					
28E5002				1		1			

PARTS LIST PER ASSY.

A C		12-23-40	1-3-41	Novak
NAVY NONE	SEE DETAILS	CARLSON		
HEAT TREAT	FINISH	DRAFT	CHECK	STRUCT	MAT	APPROV	ENG

NAME INSTALLATION - ELECTRIC WARNING HORN - INBOARD

CONSOLIDATED AIRCRAFT CORP. SAN DIEGO, CALIF.

OPP HAND NONE

DWG D SIZE

28E5007 SHEET 1 OF 2

R

LET	ALTERATION	DATE	BY
A	CONDUIT FITTINGS ADDED	7-13-44	
B	ADDED 1/8 WATER DRAIN HOLE E.O. "A" 19-4910	7-28-42	
C	ADDED 2 HOLES & 2 SLOTS TO AGREE WITH DETAIL OF 28E5006. NO WT. CHG.	11-4-42	

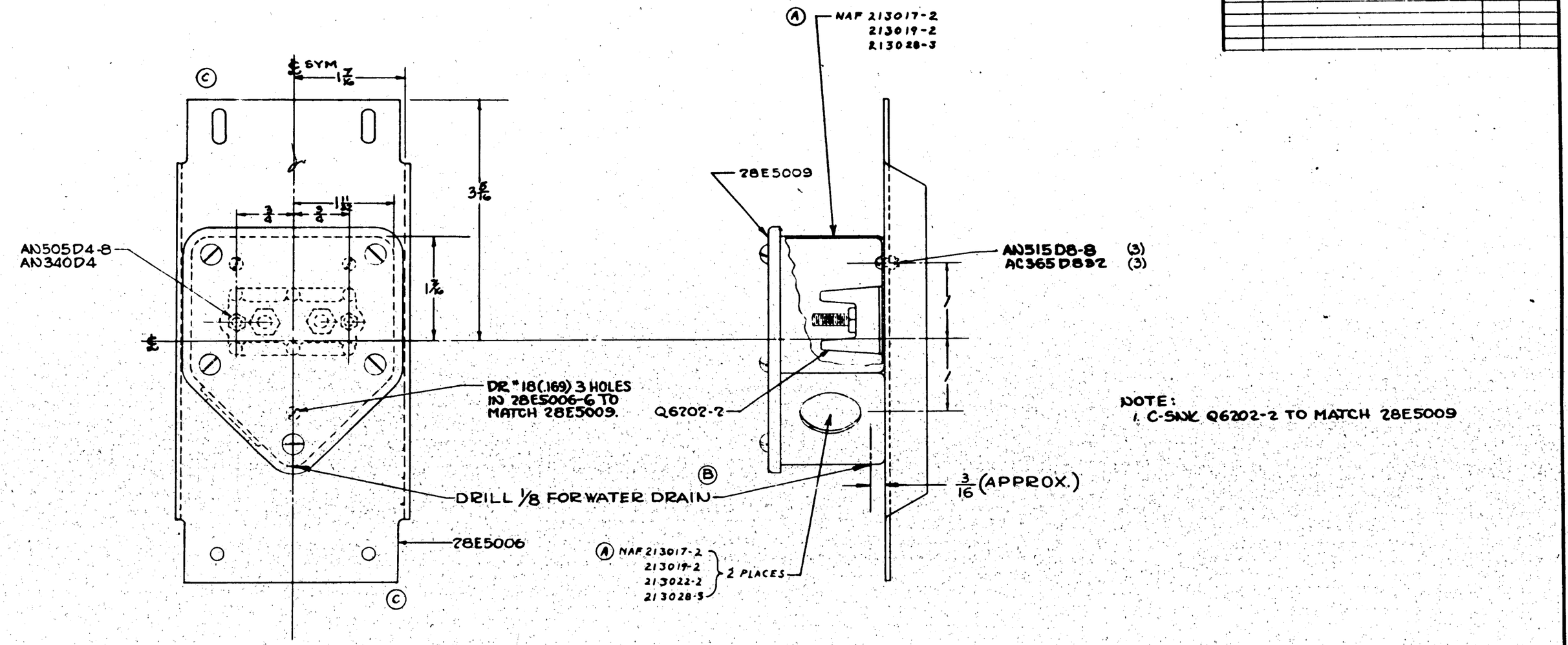

NOTE:
1. C-SINK Q6202-2 TO MATCH 28E5009

ASSY. DASH NO.	MODEL	NEXT ASSY	REQ
	28-5MN	28E5034	1
	28-5ME		1
	28-5MC		1
	28-5MA		1
	PBY-5	28E5034	1

REQUIREMENTS PER AIRPLANE

REPLACES — CALC. WT. .38

REPLACED BY — ACT. WT.

UNLESS OTHERWISE SPECIFIED: 1/32 — SCALE 12" = 1'-0"

STAMP PART NUMBER WHERE SHOWN

PART NO.	STOCK	MATERIAL	SPEC.	LH REQ. -0	RH REQ. -2	LH REQ. -3	RH REQ. -4	LH REQ. -5	RH REQ.
213028-3									3
213022-2									2
213019-2									3
NAF 213017-2									3
Q6202-2									1
AC365D832									3
AN515D8-8									3
AN505D4-8									2
AN340D4									2
28E5009									1
28E5006-6									1

PARTS LIST PER ASSY.

A C		Booher					
NAVY NONE	NONE	5-27-42					
HEAT TREAT	FINISH	DRAFT	CHECK	STRUCT.	MAT	APPROV.	ENG.

NAME JUNCTION BOX ASSY.-ELEC.-WARNING HORN

OPP. HAND NONE

CONSOLIDATED AIRCRAFT CORP. SAN DIEGO, CALIF.

DWG. SIZE D — 28E5008

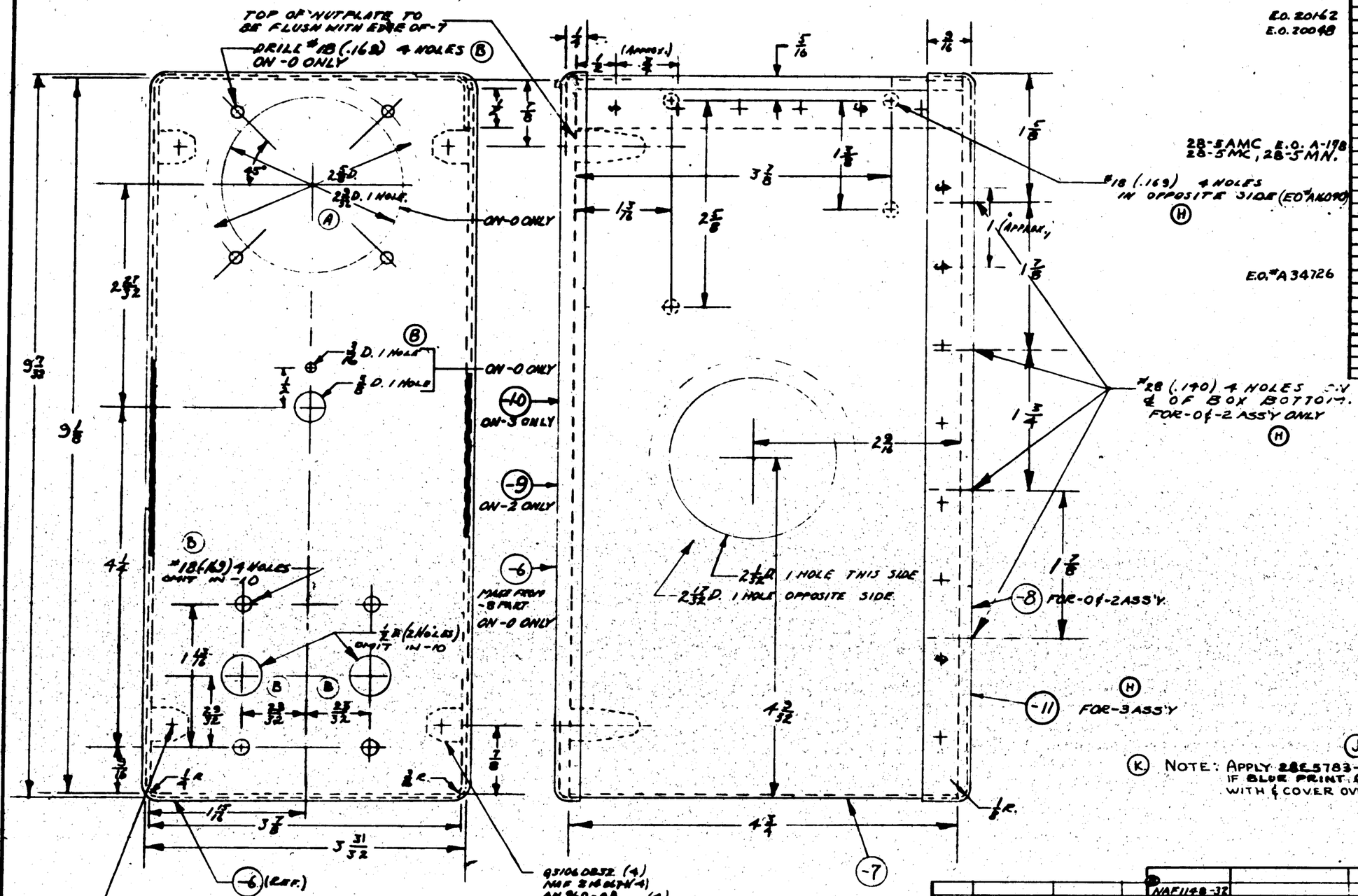

E.O. 20162
E.O. 20048

28-5AMC E.O. A-178
28-5MC, 28-5MN.

E.O. #A 34726

LET	ALTERATION	DATE	BY
A	2 3/32 DIA. WAS 2 1/4 DIA.	11-9-40	[illegible]
B	#18 (.169) 4 HOLES WAS #28 (.140) 4 HOLES		
	3/16 D. 1 HOLE WAS 11/32 D. 1 HOLE		
	#18 (.169) 4 HOLES WAS #28 (.140) 4 HOLES		
	1/8 R WAS 3/32 R	11-9-40	[illegible]
C	ADD -2 ASSEMBLY	11-6-40	[illegible]
D	NAF #21406T-1 WAS AN STD BB-18	8-1-41	[illegible]
	AN 960-A8 WAS Q 7006-NP-.50		
	NOTE ADDED — DRILL & TAP 4 HOLES FOR #8-32 ASME		
E	CREATE -3 ASS'Y, NOTED IN BM.		
	CREATE -10 (COVER) SAME AS -8 (COVER) EXCEPT AS NOTED	4-1-41	[illegible]
F	ADDED PBY-5A CONTRACT #88476 REQUIREMENTS	11-[illegible]	[illegible]
G	ADDED NAF P/N'S TO BM -3 ASSY	11-13-41	[illegible]
H	REMOVED NOTE, "OMIT IN -10 ASS'Y"		
	ADDED NOTES "FOR-01-2 ASS'Y ONLY." & "FOR-3 ASS'Y."		
	ON-3 ASS'Y, -11 WAS -8 IN B/M		
	DRAWING	1-16-42	[illegible]
J	ADDED 28E5783-6 & NOTE "SHELLAC 28E5783-6 TO INSIDE OF COVER 28E5010-9 & COVER WITH SHELLAC"	4-28-42	[illegible]
K	CHG'D NOTE "TO APPLY ---------- WITH SHELLAC." WAS "SHELLAC 28E5783-6 TO INSIDE OF COVER 28E5010-9 & COVER WITH SHELLAC."	11-28-42	LEE

GP-GREEN PRINT FINISH CODE

Z	ANODIC TREATMENT
P	P-27 PRIMER
AP	ALUMINIZED PRIMER
C	CADMIUM PLATE

(J)

(K) NOTE: APPLY 28E5783-6 TO INSIDE OF COVER 28E5010-9. IF BLUE PRINT CUT-OUT IS USED, APPLY WITH & COVER OVER WITH SHELLAC.

NOTE: HEAT TREAT -6 & -8, -3 & -10 ONLY AS PER SPEC 3R53.

(D) DRILL & TAP (4) HOLES FOR #8-32 TO MATCH Q 3106 DB32

(E) OMIT ALL HOLES EXCEPT THESE (4) TAPPED HOLES FOR -10 (COVER.)

#1 TO 83 C. #91876 CONTRACT #88476

CONT. #70496 & 77713

C. #70496 {USED "98" & ON INCLUSIVE / USED "1" TO "97" INCLUSIVE

ASSY. DASH NO.	MODEL	NEXT ASSY.	REQ.
-2	PBY-5	28E5754	1
-2	PBY-5A	28E5734	1
		28E5783-6	1
-2	PBY-5A	28E5011	1
-3	28-5MC	28E5003	1
-3	28-5AMC	28E5003	1
-2	PBY-5	28E5011-2	1
-0	PBY-5	28E5011	1

REQUIREMENTS PER AIRPLANE

REPLACES — CALC. WT.

REPLACED BY — ACT. WT.

LIMIT ON DIMENSIONS UNLESS OTHERWISE SPECIFIED ± 1/32

SCALE 12" = 1'-0"

STAMP PART NUMBER WHERE SHOWN

PART NO.	STOCK	MATERIAL	SPEC.	LH REQ. -0	RH REQ. -0	LH REQ. -2	RH REQ. -2	LH REQ. -3	RH REQ. -3	LH REQ. -4	RH REQ. -4	LH REQ. -5	RH REQ. -5
NAF 1148-32								1					
AN 3062-24								1					
AN 3066-24								1					
AN 3064-32								1					
28E5783-6						1							
NAF 21406T-1				4		4		4					
AN 442 AD3				8		8		8					
NAF 1148-32				1		1		1					
AN 960 A-8				4		4		4					
Q 3106 DB32				4		4		4					
1	11.040 x 7 x 13	ALCLAD 24S0	47A8-A					1					
-10	.040 x 6 1/2 x 12	ALCLAD 24S0	47A8-A					1					
-9	.040 x 6 1/2 x 12	ALCLAD 24S0	47A8-A			1							
-8	.040 x 7 x 13	ALCLAD 24S0	47A8-A	1		1		1					
-7	.040 x 4 7/8 x 27 1/4	ALCLAD 24ST	47A8-T	1		1		1					
-6	.040 x 6 1/2 x 12	ALCLAD 24S0	47A8-A	1									

PARTS LIST PER ASSY.

AC						
NAVY NOTED	Z-P-2[illegible] GP	4/[illegible]	3			
HEAT TREAT	FINISH	DRAFT	CHECK	STRUCT	MAT	APPROV	ENG.

NAME BOX ASS'Y — ELEC. — BOMBSIGHT VOLTAGE CONTROL

OPP. HAND None

CONSOLIDATED AIRCRAFT CORP. SAN DIEGO, CALIF.

SIZE D

28E5010

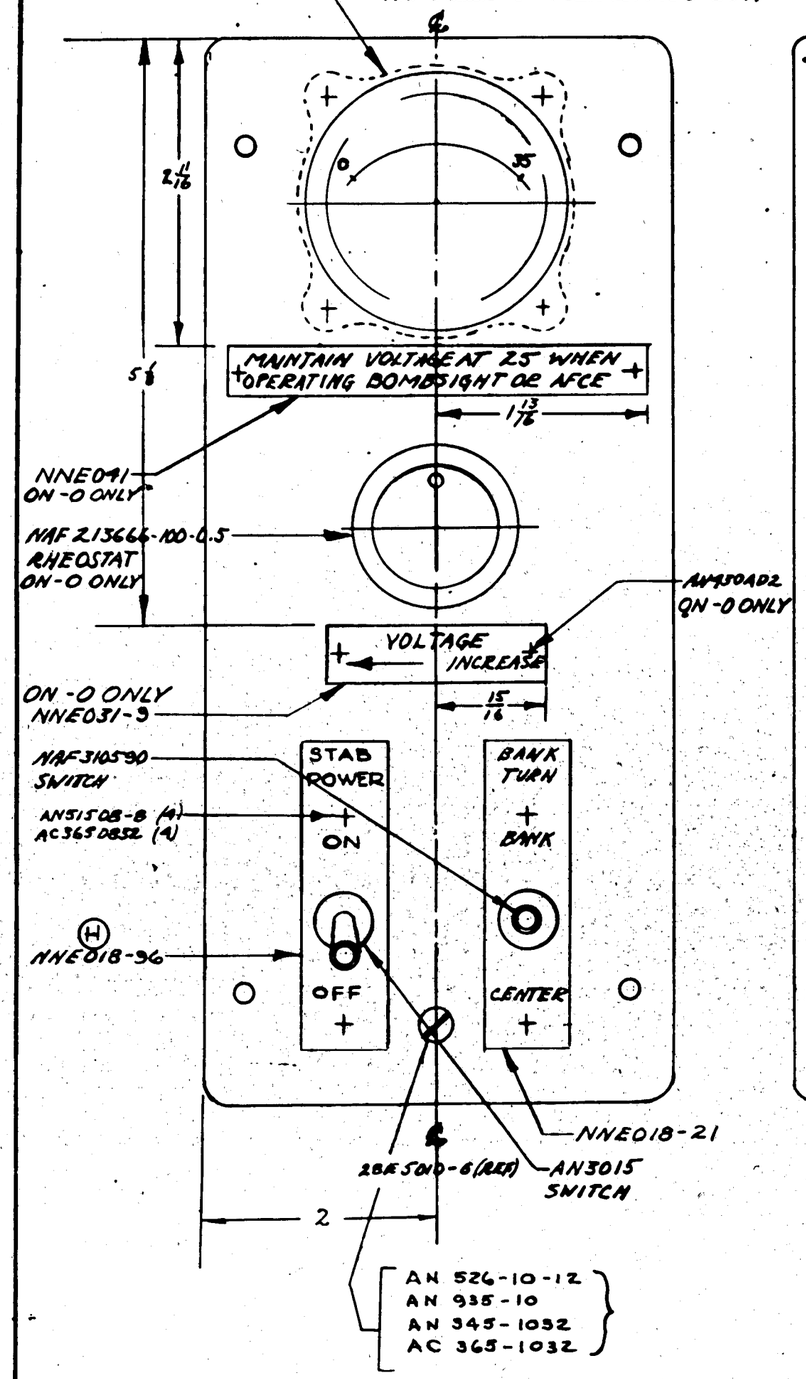

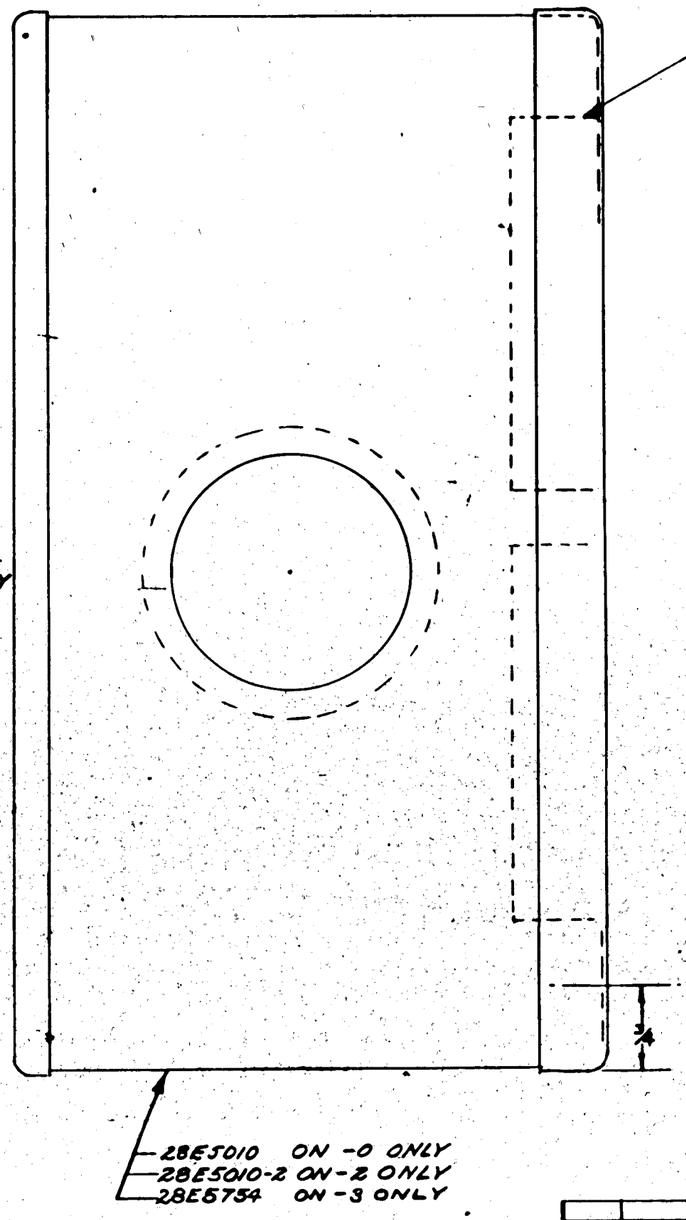

E.O. 32340 PBY-5 & E.O. A3394 28E5-0010

(B) 28E2066-1041 TERMINAL BLOCK-0 ASS'Y
28E2066-12-18 TERMINAL BLOCK-2 ASS'Y
ATTACH ON R. OF BOX BOTTOM WITH—
AN520-6-5 (2) (2 EA.)
AN935-6 (2) (2 EA.)
AN960D6 (2) (2 EA.)

PBY-5 & 98 & ON

E.O. A21039

LET.	ALTERATION	DATE	BY
A	ADD -2 ASSEMBLY	11-5-41	
B	REMARKED 28E2066-101-11 FROM -2 ASS'Y ADDED 28E2066-12-18 BASIC	5-9-42	
C1	ADDED TO FACE OF DWG & B/M AN526-10-12 AN935-10 AN345-1032 AN365-1032 TO BOTH -0 & -2 ASS'YS. ADDED DIMS & #'S		
D	ADDED TO BILL IN -2 ASS'Y ONLY NAF 213028 YEW (1) AND NAF 213028-16 (1) NAF 213028-16 (1) & NAF 213697-16	5-27-42	
E	ADD -3 ASSEMBLY	11-29-42	
F	REMOVED 28-5MM, 28-5MC, & 28-5AMC REQUIREMENTS FROM B/M	11-29-42	
G	No. 98 WAS #198	11-29-42	
H	ON FACE & B/M NNE018-96 REPLACED NNE018-17	12-4-42	

CONTRACT	DASH NO.	MODEL	NEXT ASSY	QTY.
CONTRACT #88476 SHIPS #1 TO #52 INCL.	-3	PBY-5A	28E5013	1
CONTRACT #70496 CONTRACT #77713	-2	PBY-5A	28E5013	1
USED #38 TO #200 INCL.	-2	PBY-5	28E5013	1
USED #1 TO #97 INCL.	-0	PBY-5	28E5013	1

REQUIREMENTS PER AIRPLANE

REPLACES — CALC. WT.

REPLACED BY — ACT. WT.

LIMIT ON UNDIMENSIONED DECIMALS ± 1/32 — SCALE 12" = 1/4 0"

STAMP PART NUMBER WHERE SHOWN

PART NO.	STOCK	MATERIAL	SPEC.	LH REQ. -0	RH REQ. -0	LH REQ. -2	RH REQ. -2	LH REQ. -3	RH REQ. -3	LH REQ. -4	RH REQ. -4	LH REQ. -5	RH REQ. -5
28E5754								1					
NAF213028-12								1					
NAF213028-16								1					
NAF213697-12								1					
NAF213697-16								1					
AN526-10-12				1		1		1		1		1	
AN935-10				1		1		1		1		1	
AN345-1032				1		1		1		1		1	
28E2066-13								1					
28E2066-12								1					
AC365-1032				1		1		1		1		1	
AN960D6				4		4		4		4		4	
AN5108-8				4		4		4		4		4	
AN520-6-5				4		4		4		4		4	
AN3302D2				1		1		1		1		1	
AN935-6				4		4		4		4		4	
AC365-0832				4		4		4		4		4	
28E2066-10				1									
28E2066-11				1									
NAF38922-5 (0-35 V. RANGE)				1									
NAF213666-100-0.5				1									
NAF310590				1		1		1					
AN3015				1		1		1					
28E5010-2						1							
AN3302D2						1							
NNE018-96								1					
NNE091				1									
NNE031-9				1									
28E5010										1			

PARTS LIST PER ASSY.

A C		10/11/39			
NAVY NONE	NONE	11/3/39	12/4/39		
HEAT TREAT	FINISH	DRAFT	CHECK	STRUCT	MAT.

OPP. HAND

NAME PANEL ASS'Y - ELEC. - BOMBSIGHT VOLTAGE CONTROL

CONSOLIDATED AIRCRAFT CORP. SAN DIEGO, CALIF.

SIZE D — 28E5011

LET	ALTERATION	DATE	BY
A	ADD -3 ASSEMBLY	1-5-43	[illegible]
B	ADD -3 ASSEMBLY	4-19-43	[illegible]
C	ADD -4 ASSEMBLY	11-24-43	[illegible]
D	ADDED 1/8 (APPROX.) NOTCH	3-29-44	[illegible]

E.O. A-176

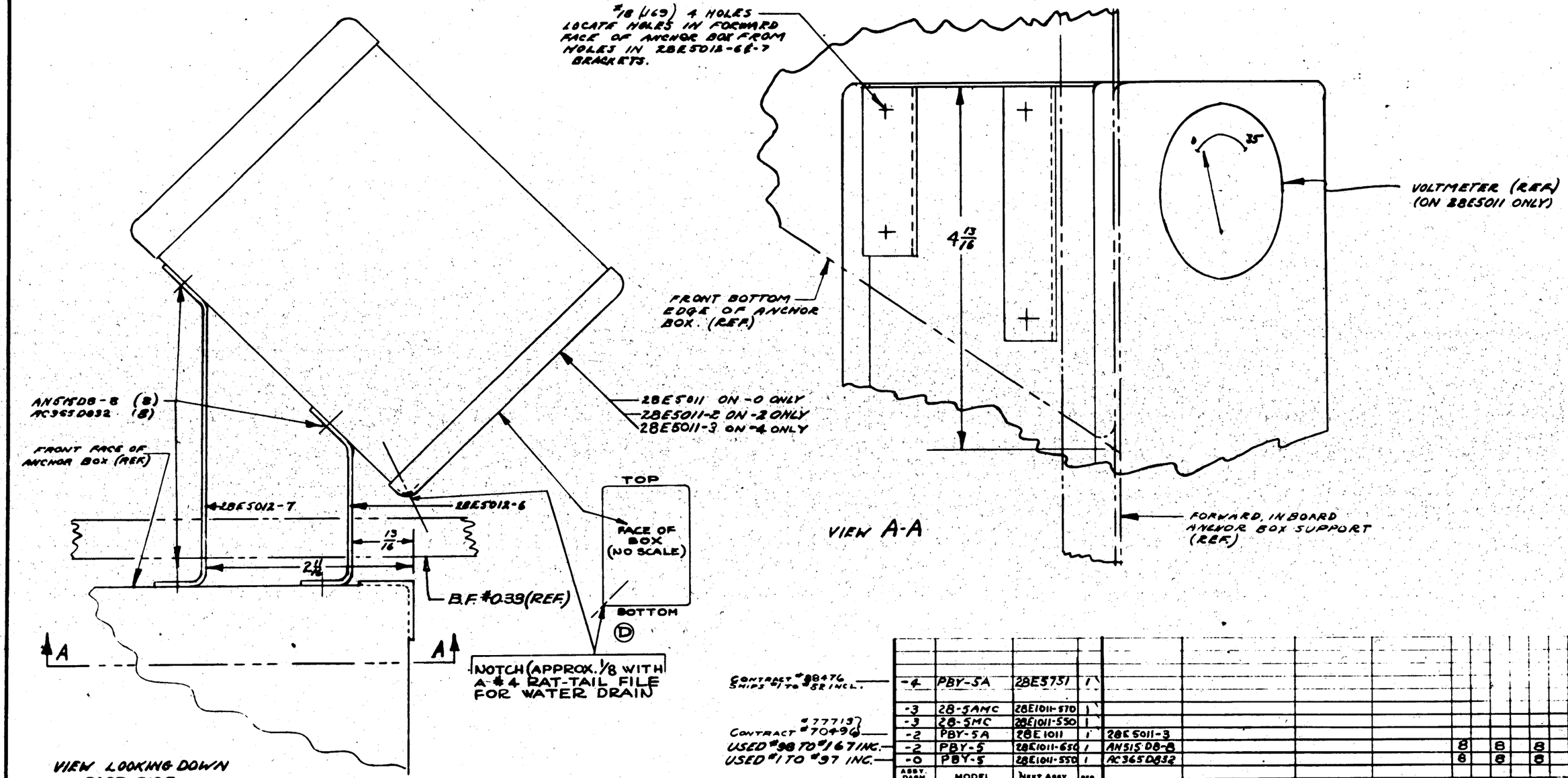

ASSY. DASH NO.	MODEL	NEXT ASSY.	REQ.
-4	PBY-5A	28E5751	1
-3	28-5AMC	28E1011-570	1
-3	28-5MC	28E1011-550	1
-2	PBY-5A	28E1011	1
-2	PBY-5	28E1011-650	1
-0	PBY-5	28E1011-550	1

CONTRACT #38476 SHIPS #1 TO #82 INCL.
CONTRACT #77713 #70490 USED #98 TO #167 INC.
USED #1 TO #97 INC.

REQUIREMENTS PER AIRPLANE

REPLACES — Calc Wt.

REPLACED BY — Act. Wt.

LIGHT ON DIMENSIONS UNLESS OTHERWISE SPECIFIED ± 1/32 — SCALE 12" = 1'-0"

STAMP PART NUMBER WHERE SHOWN

PART NO.	STOCK	MATERIAL	SPEC.	LH REQ. -0	RH REQ. -0	LH REQ. -2	RH REQ. -2	LH REQ. -3	RH REQ. -3	LH REQ. -4	RH REQ. -4	LH REQ. -5	RH REQ. -5
28E5011-3										1			
AN515D8-8				8		8		8		8			
AC365D832				8		8		8		8			
28E5010-3								1					
28E5011-2						1							
28E5012-7				1		1		1		1			
28E5012-6				1		1		1		1			
28E5011				1									

PARTS LIST PER ASSY.

AC

NAVY NONE — NONE

HEAT TREAT — FINISH

	DRAFT	CHECK	STRUCT.	APPROV	ENG.
	10/10/43	[illegible]	[illegible]	[illegible]	[illegible]
	11/13/43	[illegible]	[illegible]	[illegible]	K

NAME INSTALLATION-ELEC
BOMBST VOLTAGE CONTROL BOX

CONSOLIDATED AIRCRAFT CORP. SAN DIEGO, CALIF.

OPP. HAND NONE

SIZE D — DWG. 28E5013

K

LET	ALTERATION	DATE	BY
A	CORNER END 7/16 WAS 1/2	5-2-40	[illegible]
B	#B (.162) HOLES WAS #28 (.140)	6-5-40	[illegible]
C	1 1/32 WAS 1 1/16, 1 1/16 WAS 1 3/32, 10 1/4 WAS 10 1/32, 2 3/32 WAS 1 5/16		
PBY-5	4 1/2 WAS 4 5/8, A-A WAS 4 3/4, NOTE 28B 2051-880 WAS -500	8-25-40	[illegible]
D	ADD -2 ASSEMBLY	11-6-40	[illegible]
E	CHANGED FINISH TO 2-P-20BL WAS 2-P-2ALF	11-22-40	[illegible]
F	#32 DRILL & TAP (4 HOLES) WAS #18 (.169) DRILL (4 HOLES) ON DWG.	12-12-40	CAMP
G	REM. "ALCLAD 2450" (2 PLACES) "47AB-A" (2 PLACES) "SR53" .051 THICKNESS WAS .032. ADDED "NOTED" IN MAT'L COLUMN "NONE" IN H.T. BLOCK MAT'L NOTES IS 2. CALC. WT. 27 WAS .19.	1-14-43	POSS

PBY-5
E031186
E.O.A95338

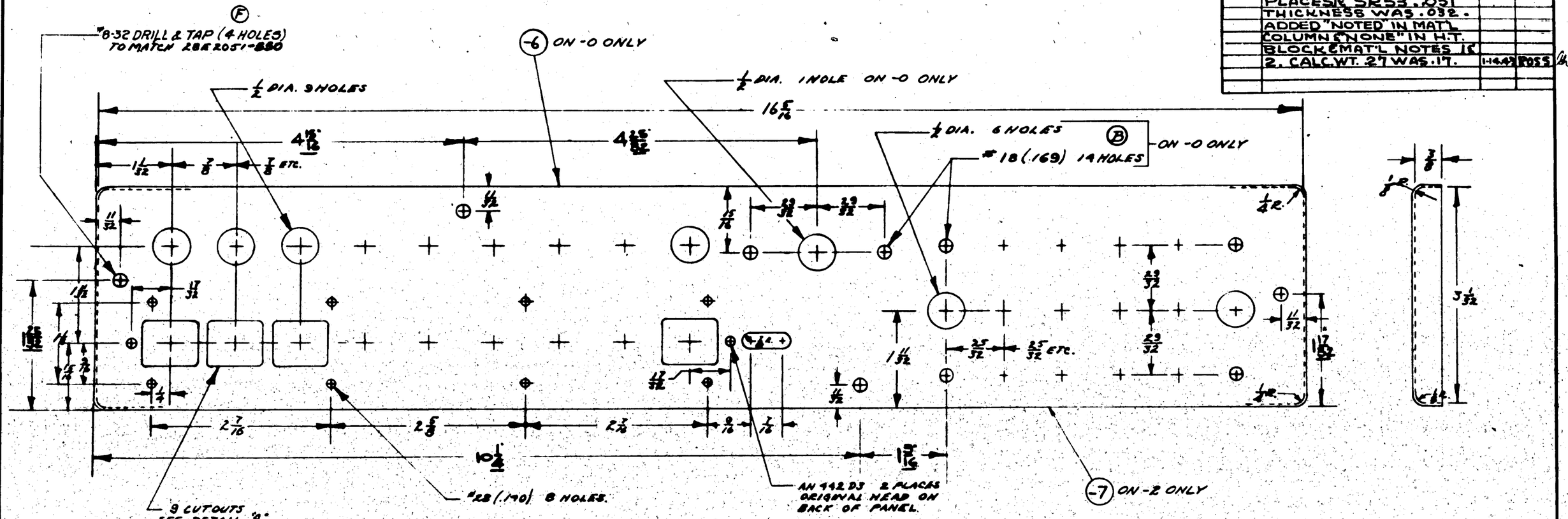

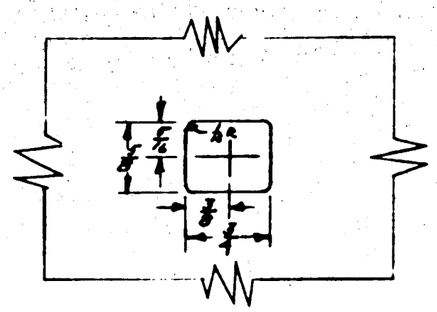

C.70456 & 77713 — -2
C.70496 — USED "98" ON -1 USED #1 TO 97 INCL. — -1
-0

MAT. NOTE:
1. AL. AL. 52S0. SPEC. 47A11-A
2. AL. 35 1/2H. SPEC. 47A4 CL 1/2H.

DBL- DULL BLACK LACQUER

FINISH CODE

Z	ANODIC TREATMENT
P	P-27 PRIMER
AP	ALUMINIZED PRIME
C	CADMIUM PLATE

ASSY. DASH NO.	MODEL	NEXT ASSY	QTY
-2	PBY-5A	28E5015	1
-1	PBY-5	28E5015-2	1
-0	PBY-5	28E5015	1

REQUIREMENTS PER AIRPLANE

REPLACES — CALC WT. .27

REPLACED BY — ACT. WT.

SCALE 12" = 1'-0"

STAMP PART NUMBER WHERE SHOWN

PART NO.	STOCK	MATERIAL	SPEC.	LH REQ. -0	RH REQ. -0	LH REQ. -2	RH REQ. -2	LH REQ. -3	RH REQ. -3	LH REQ. -4	RH REQ. -4	LH REQ. -5	RH REQ. -5
AN 442 D3						2	2						
-7	.051 16 x 19	NOTED				1							
-8	.051 16 x 19	NOTED					1						

PARTS LIST PER ASSY.

A C			Manny	[illegible]		
NAVY NONE.	2-P-20BL (E)	11/24/39	12/1/39	12/7/42		
HEAT TREAT	FINISH	DRAFT	CH'ECK	STRUCT.	MAT.	APPROV.	ENG.

NAME COVER — ELEC. — PILOTS SIGNAL SYSTEM BOX.

OPP. HAND NAME

CONSOLIDATED AIRCRAFT CORP. San Diego, Calif.

SIZE D — 28E5016 R

LET	ALTERATION	DATE	BY
U	TRACED NO WT. CHG.	9-1943	DOZIER

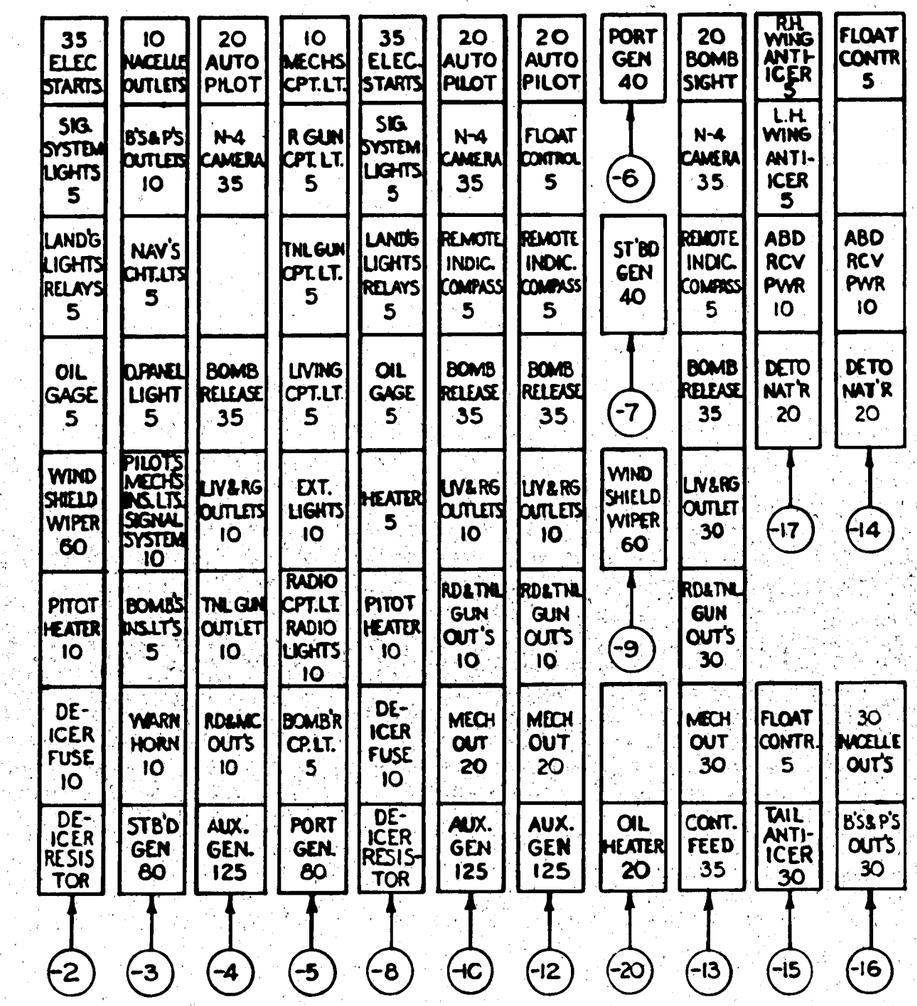

NOTE: PARTS MAY BE:
1. BLUE PRINT CUT-OUTS, OR
2. DECALCOMANIA, BLACK LINES ON WHITE, A.A.F. SPEC. 14118 WATER SLIP-OFF TYPE. (MAY BE PURCHASED FROM DUROCHROME CO., LOS ANGELES, CALIF., TYPE K, OR EQUIV.) PART NOS. TO BE PRINTED ON REVERSE SIDE OF PAPER BACKINGS. PARTS TO BE MADE TO SCALE OF D'W'G.

C.*91876 *91 & ON
*91 & ON
NO.₂(S)464
C.*70496, 77713 & 88476 ONLY
C.*91876 *346 & ON
*90 & 346 & ON
*91 & ON
*91-345
*91 & ON
C.*70496, 77713 & 88476 ONLY
C.*70496 & 77713
C.*70496, 77713 & 88476 ONLY
ALL FOR C.*70496 *77713 & *88476 ONLY
C.*88476 *53 & ON
C.*88476 1-52
C.*77713 1-3
C.*70496 168-200
C.*91876 *1-90
C.*70496 1-117
C.*70496 ALL *1-117
C.*91876 C.*70496 C.*70496 *1-117 SHIPS *91 & ON

ASSY. DASH NO.	MODEL	NEXT ASSY.	REQD.
-20	PBY-5	28E4011	1
-16	PBY-5	28E5020	1
-16	PBY-5A	28E5020	1
-15	PBY-5A	28E5020	1
-17	PBY-5	28E4011	1
-15	PBY-5	28E5020	1
-3	PBY-5	28E5020	1
-14	PBY-5	28E4011	1
-13	PBY-5	28E5020	1
-3	PBY-5A	28E5020	1
-4	PBY-5A	28E5020	1
-5	PBY-5A	28E5020	1
-6	PBY-5A	28E5020	1
-7	PBY-5A	28E5020	1
-8	PBY-5A	28E5020	1
-12	PBY-5A	28E5020	1
-10	PBY-5A	28E5020	1
-9	PBY-5A	28E5020	1
-8	PBY-5	28E5020	1
-7	PBY-5	28E5020	1
-6	PBY-5	28E5020	1
-5	PBY-5	28E5020	1
-4	PBY-5	28E5020	1
-3	PBY-5	28E5020	1
-2	PBY-5	28E5020	1

REQUIREMENTS PER AIRPLANE

REPLACES 28E5019 OF 11-21-39 — CALC. WT.
REPLACED BY — ACT. WT.
SCALE 12" = 1'-0"
STAMP PART NUMBER WHERE SHOWN

NOTED

PART NO.	STOCK	MATERIAL	SPEC.	LH REQ. -0	RH REQ. -2	LH REQ. -3	RH REQ. -4	LH REQ. -4	RH REQ. -5	LH REQ.	RH REQ.
PARTS LIST PER ASSY.											

A C		LINELSOMM CABLE		GREEN RING
NAVY NOTED	NONE	11-21-39	12-7-39	
HEAT TREAT	FINISH	DRAFT	CHECK	STRUCT MAT APPROV ENG.

NAME STRIP - ELEC. FUSE IDENTIFICATION

OPP. HAND

CONSOLIDATED VULTEE AIRCRAFT CORP. SAN DIEGO DIVISION . . SAN DIEGO, CALIF.

SIZE D — 28E5019

R 6105382

LET	ALTERATION	DATE	BY
D	REV: SEE ALTERATION, THIS DRAWING	10-17-41	[illegible]
	RELEASED ON ECP #15 OF 11-12-39		
E	RELOCATED 31/32 HOLE FOR -10 ONLY, ADDED 1 7/32 & 1 5/16 DIMS.	1-23-42	[illegible]
F	ADDED 1/8 HOLE FOR WATER DRAIN	"	"

E.O. A17677

#40 (#6193) 6 HOLES

6 (REF.)

2 7/16

3 1/16 (REF)

2 5/8 (REF)

1 7/32 D. (1 HOLE EACH END)

1 1/4

5/8

1 1/8

1/2

31/32 D. (-10 ONLY) (E)

32E195 (4)

-7 & -11 SUB ASS'Y

2 7/16 (REF)

1 7/16

(E) DRILL 1/8 FOR WATER DRAIN

7/32

1 17/32

5 9/16 (REF)

3/8 (REF)

#40 4 HOLES

3/8 (REF)

2 5/8 (REF)

3 3/8 (REF)

2/16

5/32

SNAP SLIDE
2540-1-8 (4) SLIDE
G-535-8 (4) GUIDE
G-142-A (4) WASHER
G-534-A (4) BUTTON

A.C. FUSES

(STENCIL ON COVER OF BOX IN 1/2 BLACK BLOCK TYPE LETTERS.)

6 5/16 (REF)

-6 SUB ASS'Y

(9) (8) (10)

NOTE: -0 ASSY NOT USED ON PBY-5 BU# 2406 TO BU# 2455 INCL.

FINISH CODE	
Z	ANODIC TREATMENT
P	P-27 PRIMER
AP	ALUMINIZED PRIMER
C	CADMIUM PLATE

GP GREEN PRIME

ASSY DASH NO.	MODEL	NEXT ASSY.	REQ.
-2	PBY-5A	28E4018	1
-0	PBY-5	28E4018	1

REQUIREMENTS PER AIRPLANE

REPLACES 28E5023 OF 12-12-39 — CALC WT. +.30

REPLACED BY — ACT. WT.

DIMS ON ENGINEERING UNLESS OTHERWISE SPECIFIED ± 1/32 — SCALE 12" = 1'-0"

STAMP PART NUMBER WHERE SHOWN

PART No.	STOCK	MATERIAL	SPEC.	LH REQ. -0	RH REQ. -2	LH REQ. -3	RH REQ. -4	LH REQ. -5	RH REQ.
32E195									
28E5023-10	UNITED AIRCRAFT PROD. BOX #31043 -11 SUB ASS'Y								
32E195									
28E5023-8	UNITED AIRCRAFT PROD. BOX #31043 -7 SUB ASS'Y								
G-534-A	AIRCRAFT RADIO CORP.								
G-142-A	"								
G-535-8	"								
2540-1-8	AIRCRAFT RADIO CORP.								
28E5023-9	UNITED AIRCRAFT PROD. COVER #31043 -6 SUB ASS'Y								
-11	SUB ASS'Y								
-7	SUB ASS'Y								
-6	SUB ASS'Y								

PARTS LIST PER ASSY.

AC — NAVY NONE — HEAT TREAT — P-2 GP — FINISH — DRAFT: 10-17-41 Moore; CHECK: J.T.R.; STRUCT: Klein; MAT: 10-29-41 Wm. D; APPROV: McCann; STAN.

NAME BOX - ELEC: A.C. FUSE

OPP. HAND NONE

CONSOLIDATED AIRCRAFT CORP. SAN DIEGO, CALIF.

SIZE D — 28E5023

R

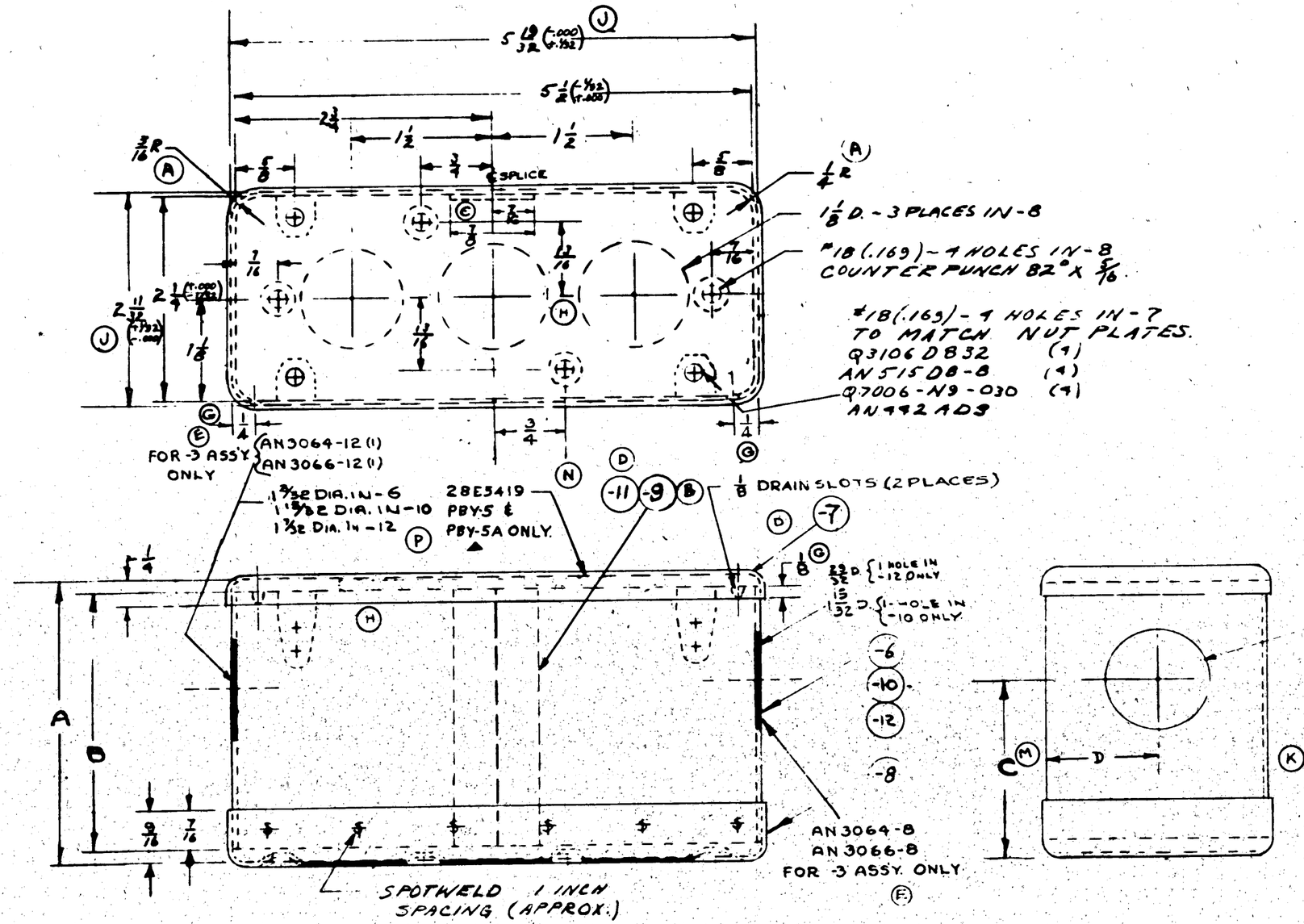

LET	ALTERATION	DATE	BY
	E.O. 21453 E.O. 22955 S.O. 32795A PBY-5A, 28-5AMC 0A-10		
A	1/4 DIM. WAS 5/16 & 3/16 DIM. WAS 1/4	11/6/40	
B	WAS LAP WELD ADDED-A BUTT WELD	11/6/40	
C-N	CREATED - 2 ASSY FOR AMPH MODELS SAME AS -0 EXCEPT -10 REPLACES -6.	6-11-41	
D	ADDED -11 14-8 ASSY - WAS -9	12-29-41	
	ADDED -3 ASS'Y FOR PBY-5B		
E	E.O. A28150 ADDED -13 COVER TO DWG. FACE 4 TO B/M Q6202F-4, Q7102AL4, AN515-4-6, AC365-440, AN3064-8 & 12, AN3066-8 & 12, NO WT. CHG.	1-8-42	EDWARDS
F	REMOVED NOTE MAKE FROM-BRKT 183 REF WITH -7	4-28-42	
G	E.O. A42683 ADDED 1/4 DIM (2) & 1/8 DIM. ADDED DRAIN HOLES (2). NO WT. CHG.	6-23-42	
H	E.O. A48824 REMOVED FROM FACE OF DWG B/M 28E5025-13, Q 6202F-4 (1) AN515-4-6 (2), AN365-440(2), Q7102AL4(2). REMOVED NOTE "32(116)----130 ONLY" ON -3 ASSY 28E5025-7 WAS 28E5025-13 NO WT. CHG.	6-23-42	
J	ADDED TOLERANCES 5 19/32 (-.000 + 1/32) 5 1/2 (-1/32 + .000) 2 11/32 (+1/32 - .000) 2 1/4 (+.000 - 1/32) (NEG. WT. CHG.)	12-18-42	
K	E.O. A74682 "D" DIM. WAS 1 1/16 — -6 "C" DIM. 2 1/8 WAS 1 9/16 — ADD "D" DIM. TO DIM. BOX-1/16 WAS 3/16 FOR ASSY (NO WT. CHG.)	12-18-42	
L	E.O. A91199 IN B/M -7-8 "NOTED" WAS 2430 AL. SPEC 47AB-A —— ADD MATERIAL NOTE 1.-7-8 — H.T. NONE 2. AL. AL. ---- H.T. NONE. —— -7-8 GAUGE .051 WAS .040 (WT. CHG. .32 lbs. per ship)	12-18-42	
M	FLR 21804 ON FACE OF DWG. "D" DIM WAS SHOWN ON R.H. SIDE WT. CHG. NEG.	3-30-43	
N	C.R. 34790 ADDED 28E5419 FOR PBY-5 IN LIEU OF (WT. CHG. NEG.)	8-5-43	
P	ADDED 28E5419(2) TO -2 ASSY FOR PBY-5A ONLY, C. NO.(S) 464 & SPARES. WT. CHG. NEG.	8-9-43	

(L)

MATERIAL NOTE —
1.-7 & -8 MAY BE MADE FROM AL. AL. SPEC. 47A11 TEMP. A H.T. NONE.
OR 2. AL. AL. SPEC. 47A4 CL. ½ H. H.T. NONE

(K)

	PART NO.	A	B	C	D
-0 ASS'Y	-6	3 1/16	2 13/16	2 1/8	1 1/2
-2 ASS'Y	-10	3 5/16	3 5/16	2 3/16	1 3/16
-3 ASS'Y	-12	3 9/16	3 5/16	2 3/16	1 3/16

▲ 28E5419 USED IN -0 ASSY FOR PBY-5 & IN -2 ASS'Y FOR PBY-5A ONLY C. NOS.(S) 464 & SPARES.

GP GREEN PRIME
FINISH CODE
Z ANODIC TREATMENT
P P-27 PRIMER
AP ALUMINIZED PRIMER
C CADMIUM PLATE

ASSY DASH NO.	MODEL	NEXT ASSY	QTY
-0	28-5HA, HC	28F5040	1
-0	28-5HE, MJ	28F5040	1
-3	PBY-5B	28F5040	1
-2	28-5AMN	28F5040	1
-2	28-5AMC	28F5040	1
-2	PBY-5A	28F5040	1
-0	PBY-5	28F5040	1

REQUIREMENTS PER AIRPLANE

REPLACES — CALC WT .28
REPLACED BY — ACT WT

LIGHT ON DIMENSIONS UNLESS OTHERWISE SPECIFIED ± 1/32
SCALE 12" = 1'-0"
STAMP PART NUMBER WHERE SHOWN

PARTS LIST PER ASSY.

PART NO	STOCK	MATERIAL	SPEC.	LH REQ. -0	RH REQ. -2	LH REQ. -3	RH REQ. -4	LH REQ. -5	RH
28E5419 ▲				1	1				
Q3106-D832				4	4	4			
AN515D8-8				4	4	4			
AN442AD3				8	8	8			
Q7006-N9-030				4	4	4			
-12	.040 x 3½ x 17	24ST ALCLAD	47AB-T			1			
-11	.040 x 3½ x 17	24ST. ALCLAD	47AB-T			1			
-10	.040 x 3½ x 17	24ST. ALCLAD	47AB-T			1			
-9	.040 x 3	24 ST ALCLAD	HOLD AT START	1					
-8	.051 x 6 x 9	NOTED			1		1		
-7	.051 x 6 x 9	NOTED		1		1			
-6	.040 x 3½ x 17	24ST. ALCLAD	47AB-T	1					

AN3066-12
AN3066-8
AN3064-12
AN3064-8

AC		
NAVY NOTED.	P-GP	
HEAT TREAT	FINISH	

DRAFT 2/24/43 | CHECK | STRUCT | MAT | APPROV | ENG

NAME BOX ASS'Y-ELEC.-THERMOMETER BULB COVER
OPP. HAND NONE
CONSOLIDATED AIRCRAFT CORP. SAN DIEGO, CALIF.
DWG. SIZE D
28E5025

R

E.O. 035723

E.O. AD6341

LET	ALTERATION	DATE	BY
A	28B005-50 WAS 28B005-60	2-11-41	[illegible]
	28B005-48 WAS 28B005-50		
B	REMOVED NOTE "LOCATED ON INSTALLATION". WT. CHG. NEG.	-14-43	[illegible]

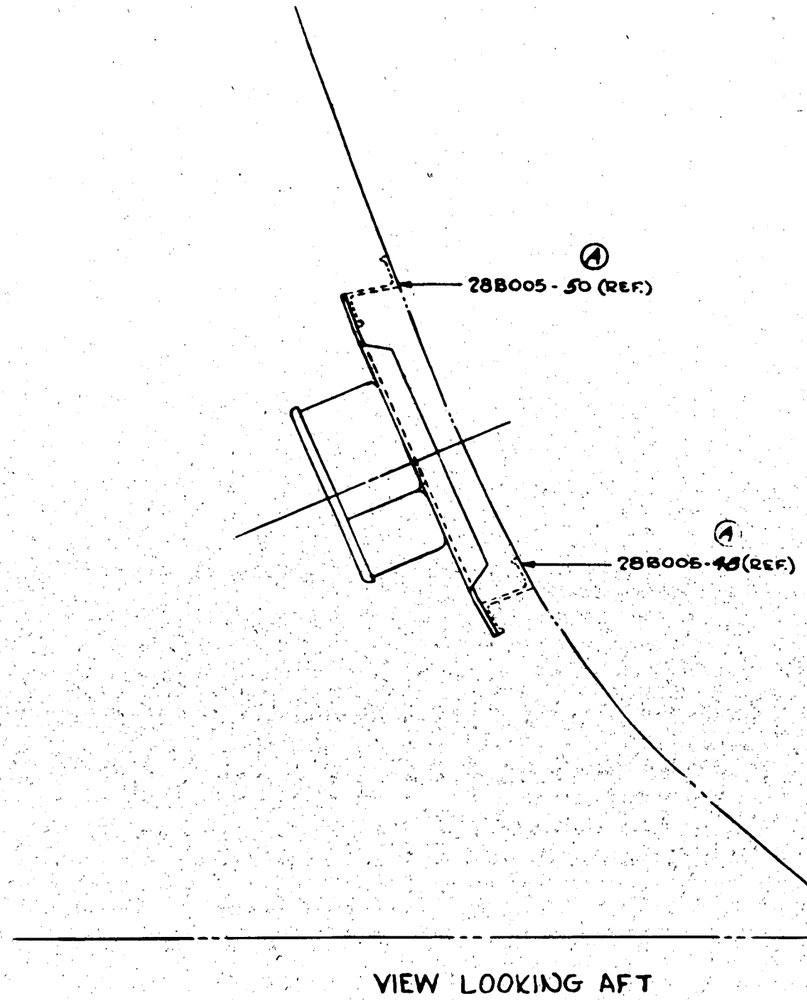

VIEW LOOKING AFT

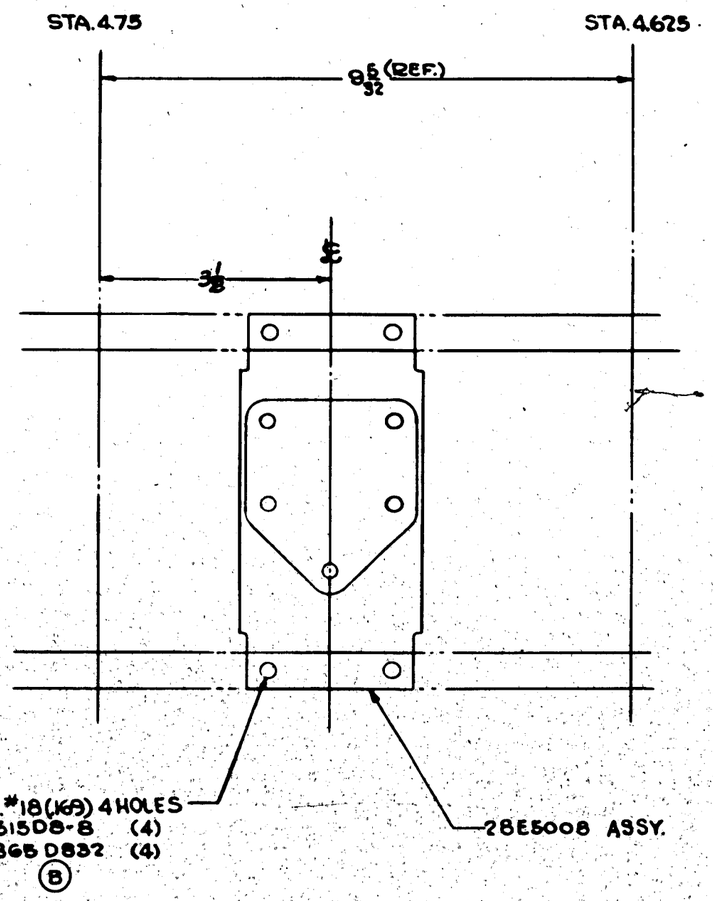

VIEW LOOKING OUTBOARD

AFT

-0	28-5MN	28E1013	1
-0	28-5MC	28E1013	1
-0	PBY-5	28E1013	1
-0	28-5ME	28E1013	1
-0	28-5MA	28E1013	1
ASSY. DASH NO.	MODEL	NEXT ASSY.	REQ.

REQUIREMENTS PER AIRPLANE

REPLACES — CALC. WT.

REPLACES BY — ACT. WT.

UNLESS OTHERWISE SPECIFIED ± 1/32 — SCALE 6" = 1'-0"

STAMP PART NUMBER WHERE SHOWN

PART No.	STOCK	MATERIAL	SPEC.	LH REQ. -0	RH REQ. -2	LH REQ. -3	RH REQ. -4	LH REQ. -5	RH REQ.
AN515D8-8				4					
AC365D832				4					
28E5008-8				1					

PARTS LIST PER ASSY.

AC		Booher						
NAVY NONE	FINISH ON DETAILS	6-6-40						
HEAT TREAT	FINISH	DRAFT	CHECK	STRUCT.	MAT	APPROV.	ENG	

NAME INSTALLATION - ELEC. - JUNCTION BOX IND'D.

OPP. HAND NONE

CONSOLIDATED AIRCRAFT CORP. SAN DIEGO, CALIF.

SIZE D

28E5034

R

LET	ALTERATION	DATE	BY
A	-2 ASS'Y. ADDED FOR PBY-5	5-12-40	K.L.
	#2 SHIP (U.S.C.G.). NAF		
	FITTINGS ADDED FOR -0E-2 ASS'Y		
B	DWG. & B/M CORRECTED &	9-29-40	K.L.
	BROUGHT UP TO DATE		
C	-3 ASSY WAS -2 ASSY	11-4-40	K.L.
	-3 ASSY. HOLE DETAILS ADDED	"	"
	-10 WAS -6. ADD 1 #18 HOLE	"	"
	IN -9 ALSO ⅜ DIM.	"	"
D	ADDED DETAIL OF STENCIL MARKING		
	FOR -3 ASSY. ADDED -3 TO B/M		
	ADDED -11 TO B/M & FACE OF DWG		
	& CHANGED LOCATION OF HOLES		
	FOR -3 ASSY	12-1-40	W.D.GREEN
E	AT -7 ADDED TO NOTE "NOT NEC.	1-27-41	O.P.H.
	FOR "E" TO CHG NEXT ASS'Y. FOR -3		
F	CHG'D -6 TO -11 FOR -2 ASS'Y.		
	CHG'D -11 TO -6 FOR -0 ASS'Y.		
G	HOLES 45° OFF VERTICAL THRU -6 & -7		
R	CHG'D STOCK OF -6, -10, -11, -11E, -11F, -13		
	DIM. 2.402 WAS 2.460. WAS 1.18 WAS 1.20	2-3-43	H.O.E.

K (6 PREVIOUS ADDS) NAF 213017-6 & (7) 7016-ALO-040 (2 REQ.) WAS (8 REQ.) — 12-31-41 HORN
L REMOVED NAF 213028-2 & (NAS623-32) FROM B.M. & ANS 626 32-8 FROM FACE ADDED (REF.) TO NK C23-32S — 12-31-41 HORN

DR A1600 B
DR B1600 B5

V CREATED -12 DETAIL K-5 — 12-31-41 HORN
K 31/32 DIA. (6 HOLES) WAS 6 HOLES — 12-31-41 HORN
23/32 DIA. (7 HOLES) WAS 8 HOLES
ADDED TO FACE & B.M. NAF 213017-2 (2) — CANCELLED AT LEFT)

E.O. A9455 20-3 MN

M, N CREATED -6 ASSY FOR 20-3 MN — 1-28-41 OPH
ADDED NEW "STEN. MARKINGS FOR -4 ASSY." ADDED NAF 2130
17-8 & 7102-AO-14 TO FACE
B/M

E.O. 23139A

18

NO FINISH — $16\frac{3}{16}$ — NO FINISH

$\frac{3}{4}$ $\frac{3}{8}$ $\frac{25}{32}$ $1\frac{3}{16}$ $1\frac{1}{16}$ $1\frac{3}{16}$ $1\frac{3}{16}$ $1\frac{3}{16}$ $1\frac{3}{16}$ $1\frac{1}{16}$ $1\frac{3}{16}$ $1\frac{3}{8}$ $1\frac{1}{4}$ $1\frac{1}{16}$ $1\frac{1}{16}$ $\frac{3}{8}$

(R) $2.402^{+.000}_{-.005}$ O.D.-8 — $\frac{1}{8}$ R — $\frac{1}{4}$ — $\frac{5}{16}$ — $2\frac{5}{8}$ DIA. — $2\frac{3}{16}$ DIA. — $\frac{3}{16}$ — $\frac{5}{8}$ — 1

(13) (M) (FOR -6 ASSY) E.O. 26328A

(6) NO FINISH ON INSIDE.

(7) TURN TO FIT -6 & RIVET AS SHOWN. NOT NEC. FOR TURNING TO CLEAN UP THREADS ENTIRELY

E

285-ME PBY-5 50-26328-C E.O. 29164 A

E.O. 36190-A PBY-5, 5B-5MC

E.O. 26328C

$\frac{31}{32}$ (REF) FITTINGS AS PER CHG-12 DETAIL K-5

FF LH SYN FLOAT RH SPERRY

(B) (D) (C) (D) (D) (G) (C)

SW BKA SIG. TACH UNIT

STENCIL MARKING FOR -3 ASSY ONLY (D)

(10) FOR -3 ASSY

-6, -10, -11, & -13 ARE IDENTICAL EXCEPT FOR HOLES.

CHAMFER 45° × $\frac{3}{32}$

THREAD $2\frac{1}{2}$-18 NF3 $\frac{5}{8}$ LONG TO FIT NAF 213017-16

"28 (.140) DIA. 4 HOLES AN 526D632-5 AC 365D632 (C)

$\frac{31}{32}$ DIA HOLE IN -3 ASSY. (C)

$\frac{23}{32}$ DIA. 6 HOLES -0, -2, & -3, & -60 ASS'Y. (M) (D)

NOTE ÷ NO FINISH FOR $\frac{3}{32}$ RADIAL DISTANCE AROUND HOLES.

F.F. L.H. ANTI L.H. L.H. SYN FLOAT RH RH TELL RH.

SW COMP ICER PDI TACH SIG TACH PDI TALE COMP

$1\frac{1}{2}$

AN 442 D3

(14) FOR -4 ASSY

FIN. DR AP AA SYN FLOAT SA SA

ACH INNER ICE XT SIGNAL XT. COMP

STENCIL MARKINGS FOR -4 ASSY ONLY (H)

NAF 213017-4 (3)
Q 7102-AO-14 (3)
TO PLUG HOLES NOT BEING USED FOR -4 ASSY

FINISH CODE	
Z	ANODIC TREATMENT
P	P-27 PRIMER
AP	ALUMINIZED PRIMER
C	CADMIUM PLATE

(8) $1\frac{5}{8}$ DIA. HOLE

"28 (.140) DIA. 4 HOLES TO MATCH CANNON NK-C23-32S PLUG (REF.) AN 425D3 (8) AC 366D632 (M) (L)

$\frac{31}{32}$ DIA. 4 HOLES -0, & -2, & -60 ASS'Y. (K)

STENCIL MARKINGS $\frac{1}{4}$ HIGH ADJACENT TO FITTINGS

"18 (.169) DIA. HOLE (C)

(9) ALCLAD DISC TO FIT INSIDE NAF 213017-16 2 $\frac{13}{32}$ DIA.

(G)

$\frac{23}{32}$ DIA. HOLE -0 ASS'Y & -60 ASS'Y (M)

$\frac{27}{32}$ DIA. 2 HOLES IN -2 -2 ASS'Y ONLY (A)

$\frac{31}{32}$ DIA. 4 HOLES

(12) -3 ASS'Y ONLY (J)

F.F. LH SYN FLOAT R.H. GYRO.

S.W. TACH. SIG. TACH. RHEO.

$\frac{23}{32}$ DIA. 7 HOLES (K)

(A) INSTALL NAF FITTINGS IN HOLES AS INDICATED BY LETTERS & TABLE BELOW.

LOCATION	FITTINGS
A	NAF 213019-5 & NAF 213028-5
B	NAF 213019-4 & NAF 213028-4
C	NAF 213019-3 & NAF 213028-3
D	NAF 213019-2 & NAF 213028-3
E	NAF 213017-6 & Q 7016-ALO-040 (J)
F	NAF 213019-2 (8) NAF 213028-3 (3) NAF 213019-3 (2)
G	NAF 213017-2 & Q 7008-ALO-040

(CHG. "R" IN UPPER R.H. CORNER)

M	ADDED -60 ASS'Y. NO WT. CHG.	1-24-41	E.O. A20066A
N	7016-ALO-040 (2) WAS Q 7016-AO -14 (3) FOR -4 ASSY. WT. CHG. NEG.	1-24-41	
P	ADDED DETAIL OF STENCIL MARKINGS		
	-60 ASS'Y. (NO WT. CHG.)		E.O. A20066B
R	REVISED ALL CODED STENCILING FROM -12 to -13		E.O. A23208

(P) STENCIL MARKINGS FOR -60 ASSY ONLY

FINISH: P. P-27 PRIMER

#2 SHIP SERIAL # 2790 U.S.C.G.

NOTE ÷ FINISH P ON -6 AS NOTED. NO FINISH ON -7, -8, -E, -9. NAF 213017-16 & NK-C23-32S ARE OMITTED FROM DWG. & ARE TO BE PARTS OF THIS ASS'Y. APPLY ANTI-SIEZE PASTE TO THREADS ON FINAL ASS'Y. NOTE TO TOOL DESIGN: MANDREL FOR FORMING -6 HAS BEEN MADE BY EXPERIMENTAL DEPT.

| | | |

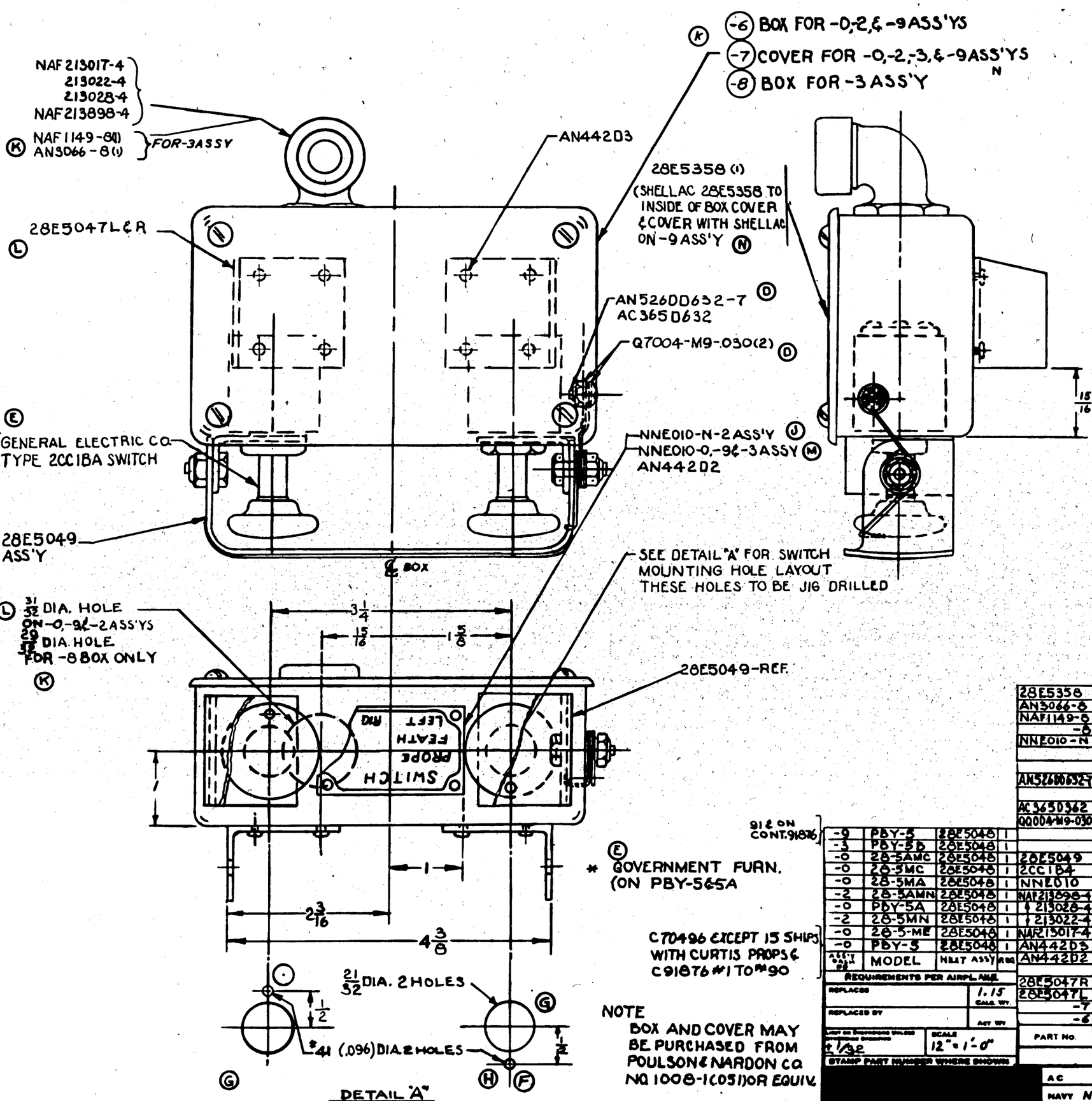

LET	ALTERATION	DATE	BY
A	-2 ASS'Y ADDED FOR 28-5-ME	8-19-40	LEE
B	CHG'D SHIP DESIGNATIONS 1 TO 58		
	68 TO 133 140& UP WAS 1-13		
	26 TO 180 164& ABOVE REMOVED		
	-2 ASS'Y REQT'S & ADDED -0 REQT'S		
	FOR 28-5ME	10-11-40	WIDGEON
C	ADDED 28E5049 ASS'Y TO DWG & B/M	10-11-40	WIDGEON
D N	28E5039 SPRING ADDED WITH NECESSARY ACCESSORIES	11-14-40	BEEHLER
E	ADDED NOTE FOR GOV. FURN	6-16-41	SWEENEY
F	(.096) HOLE WAS ON OPPOSITE SIDE OF 21/32 HOLE	7-28-41	STRATTON
G N	RELOCATED THE TWO 21/32 DIA. HOLES IN DETAIL "A"	9-16-41	[illegible]
H	RELOCATED #41 (.096) 2 HOLES IN DETAIL "A"	12-27-41	GRAY
J	CREATED -2 ASS'Y FOR 28-5MN		
	ADDED NNE010-N (1)	12-27-41	GRAY
	ADDED AHN REQT'S		
K	CHG'D FR N BOX TO -8 BOX & -7 COVER		
	ADDED NOTE "BOX MAY BE PURCHASED"		
	ADDED -3 ASS'Y (-8 REPLACES -6 WHEN 49 BOX & AN3066-8(1) REPLACE NAF213017, 213022, 213028 & 213098) ADDED 21/32 HOLE FOR -8 BOX. ADDED REQT'S. NEG. WT. CHG	4-9-42	SNYDER
L	REMOVED "ON -0 ASS'Y ONLY" & "ON -0 & -2 ASS'YS" READ "ON -0 ASS'Y ONLY" NO WT. CHG.	7-1-42	MURRAY
M	N NE010 (1) -0 & -3 ASSYS WAS (1) IN -0. NO WT. CHG.	7-23-42	DRIN
N	CREATED -9 ASS'Y. WT. CHG. NEG	8-19-42	WINNACKER
P	FOR -0, -2, -3, & -9 ASS'YS, REMOVED Q7008-M21-.030(1), Q7008-AL13 .030(1), 5/16 DIA. 2 HOLES, AC365 D1032 (2) AN3D-3A(1), Q8107-10 (1), & 28E5059(1) WT. CHG. NEG	9-16-43	WINNACKER SNM

PBY-5
28-5ME
E.O. 24624
PBY-5
E.O. 29103
E.O. A12862
PBY-5, 28-5
E.O. A13781
28-5MN
E.O. A20111
E.O. A1378
E.O. A20041
E.O. A45217
E.O. A54578
E.O. A90353 (89-18)

FINISH
P = P27 PRIMER
2BL = 2 BLACK LACQUER

912 ON CONT. 91876

-9	PBY-5	28E5048	1
-3	PBY-5B	28E5048	1
-0	28-5AMC	28E5048	1
-0	28-5MC	28E5048	1
-0	28-5MA	28E5048	1
-2	28-5AMN	28E5048	1
-0	PBY-5A	28E5048	1
-2	28-5MN	28E5048	1
-0	28-5-ME	28E5048	1
-0	PBY-5	28E5048	1
ASS'Y DASH NO.	MODEL	NEXT ASSY	REQ

C 70496 EXCEPT 15 SHIPS WITH CURTIS PROPS & C 91876 #1 TO #90

REQUIREMENTS PER AIRPLANE

REPLACES	1.15 GALS. WT.
REPLACED BY	ACT. WT.

SCALE 12" = 1'-0"

STAMP PART NUMBER WHERE SHOWN

NOTE
BOX AND COVER MAY BE PURCHASED FROM POULSON & NARDON CO NO 1008-1(C051) OR EQUIV.

PART NO.	STOCK	MATERIAL	SPEC.	LH REQ. -0	RH REQ. -0	LH REQ. -2	RH REQ. -2	LH REQ. -3	RH REQ. -3	LH REQ. -9	RH REQ. -9	LH REQ. -8	RH REQ. -8
28E5358										1			
AN3066-8													
NAF1149-8													
-8	BOX												
NNE010-N						1							
AN526D0632-7				1		1		1		1			
AC365D632				1		1		1		1			
Q0004-M9-030				2		2		2		2			
28E5049	ASS'Y			1		1		1		1			
2CC1B4				2		2		2		2			
NNE010				1				1					
NAF213898-4				1									
& 213028-4				1		1							
& 213022-4				1		1							
NAF213017-4				1		1							
AN4420-3				8		8		8		8			
AN4420-2				4		4		4		4			
28E5047R				1		1		1		1			
28E5047L				1		1		1		1			
-7	COVER			1		1		1		1			
-6	BOX			1		1		1		1			

PARTS LIST PER ASSY.

A.C.		LEE	
NAVY NONE	P-28L & NOTED	8-5-40	
HEAT TREAT	FINISH	DRAFT	CHECK / STRUCT / MAT / APPROV / ENG

NAME: SWITCH ASS'Y-ELEC-FAST FEATHER
OPP. HAND NONE
CONSOLIDATED AIRCRAFT CORP. San Diego, Calif.
DWG D SIZE
28E5046

28E5046

LET	ALTERATION	DATE	BY
A	CHG'D SHIP DESIGNATIONS - 1 TO 58		
	68 TO 133 & 140 UP - WAS 1 TO 13		
	26 TO 160 - 168 ABOVE - ADDED		
	28-5ME REQTS	10-1-42	WILKINSON
B	CREATE -3 ASS'Y (NO MFG NO.)	8-28-42	VITALI
C	CREATED -2 ASS'Y. WT. CHG.	9-6-42	CHANDLER
	NEG.		

P.O. A32489
E.O.# A59575

PBY-5
28-5ME

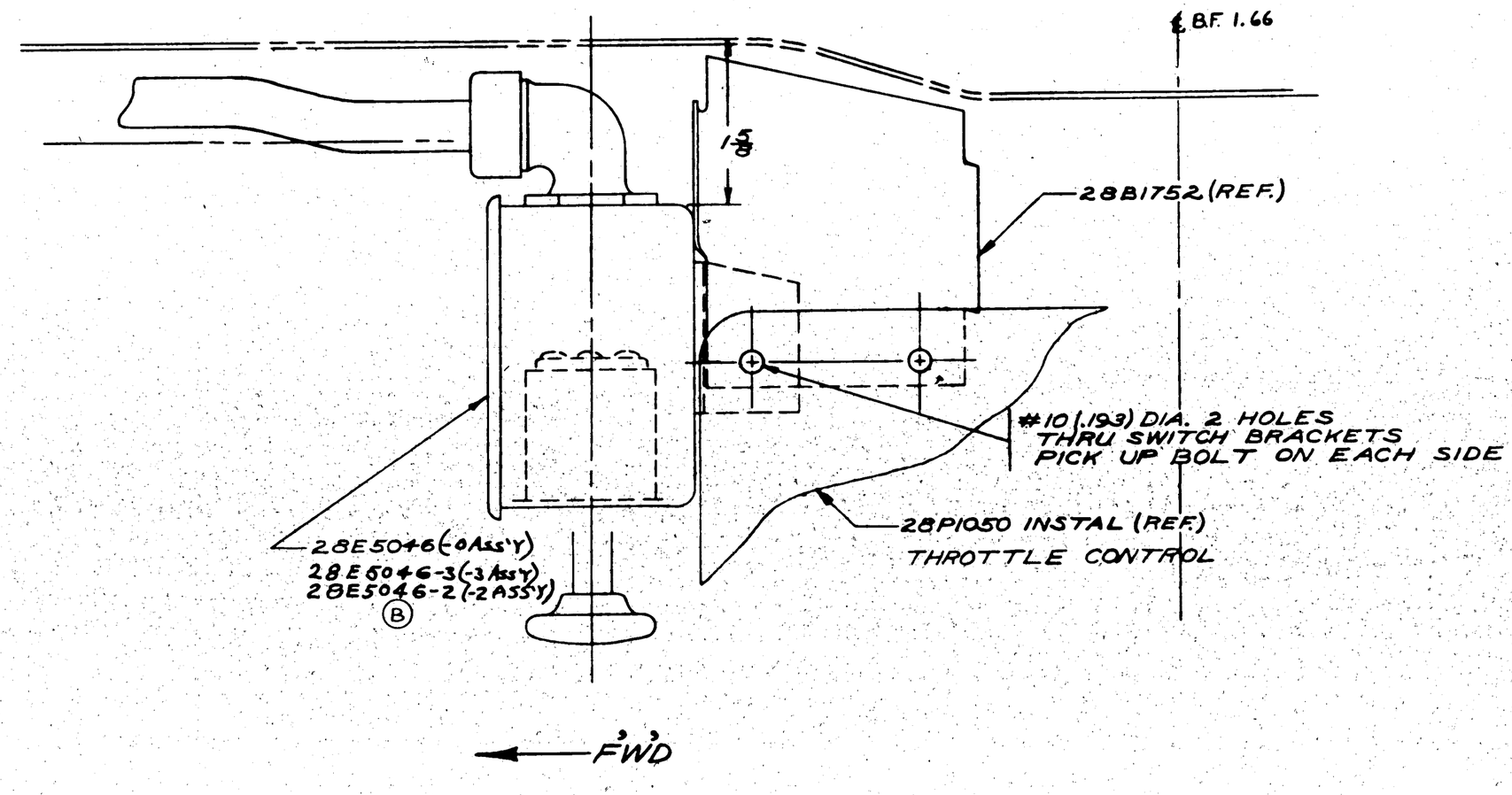

A

SHIPS #1 TO #58 INCL., #68 TO #133 INCL., #140 & ABOVE

ASSY. DASH No.	MODEL	NEXT ASSY.	REQ.
-2	28-5 MN	28E1011	-1
-2	28-5 AMN	28E1011	-1
-0	28-5MC	28E1011	-1
-0	28-5MC	28E1011	-1
-3	PBY-5 B	28E6042	-1
-0	PBY-5A	28E1011	-1
-0	28-5MA	28E5536	-1
-0	28-5ME	28E5536	-1
-0	PBY-5	28B1011	-1

REQUIREMENTS PER AIRPLANE

REPLACES

REPLACED BY

CALC. WT.

ACT. WT.

LIMIT OR ENGINEERING UNLESS OTHERWISE SPECIFIED ± 1/32

SCALE 12" = 1'-0"

STAMP PART NUMBER WHERE SHOWN

PART No.	STOCK	MATERIAL	SPEC.	LH REQ. -0	RH REQ. -0	LH REQ. -2	RH REQ. -2	LH REQ. -3	RH REQ. -3	LH REQ. -4	RH REQ. -4	LH REQ. -5	RH REQ. -5
28E5046-2						1							
28E5046-3								1					
28E5046 ASS'Y -0				1									

PARTS LIST PER ASSY.

AC

GOVT NONE

HEAT TREAT

NONE

FINISH

STRUCTURAL MARKS

DRAFT 8/13/42 9/18/42

CHECK

STRUCT.

MAT 8/31/42

APPROV.

ENG.

NAME INSTALL.-ELEC- FAST FEATHER SWITCHES

OPP. HAND NONE

CONSOLIDATED AIRCRAFT CORP. SAN DIEGO, CALIF.

SIZE D

28E5048

LET	ALTERATION	DATE	BY

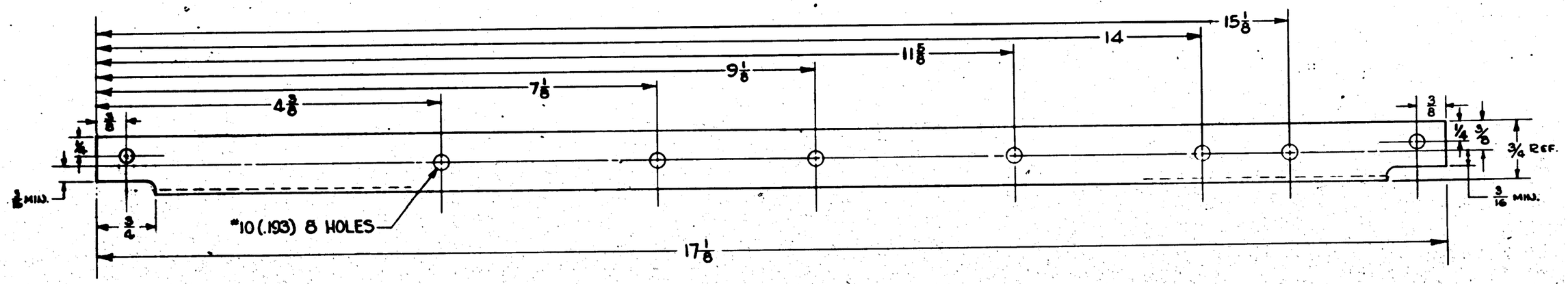

NOTE:
RELIEF RADII 1/8

FINISH CODE

Z	ANODIC TREATMENT
P	P-27 PRIMER
AP	ALUMINIZED PRIMER
C	CADMIUM PLATE

ASSY. DASH NO.	MODEL	NEXT ASSY.	REQ
	28-5AMN	28E5057	1
	28-5MN	28E5057	1
	PBY-5A	28E5057	1
-0	28-5MC	28E5057	1
-0	PBY-5	28E5057	1

REQUIREMENTS PER AIRPLANE

REPLACES

REPLACED BY

CALC. WT. .146

AGT. WT.

SCALE 12"=1'-0"

± 1/32

STAMP PART NUMBER WHERE SHOWN

PART NO.	STOCK	MATERIAL	SPEC.	LH REQ.	RH REQ.	LH REQ.	RH REQ.	LH REQ.	RH REQ.	LH REQ.	RH REQ.	LH REQ.	RH REQ.
	Y-2-A26T×174	A.C.	47AB T	-0		-2		-3		-4		-5	

PARTS LIST PER ASSY.

A.C.		Booher					
NAVY NONE	Z-P	10-44					
HEAT TREAT	FINISH	DRAFT	CHECK	STRUCT.	MAT	APPROV.	ENG.

NAME SUPPORT-ELEC-FLEX MANIFOLD JUNC. BOX

OPP. HAND NONE

CONSOLIDATED AIRCRAFT CORP. SAN DIEGO, CALIF.

SIZE D

28E5056

PBY-5A, OA-9, E.O. A-6718

LET	ALTERATION	DATE	BY
A	ON FACE OF DIM. 8 3/32, WAS 1 3/32, 1/2, WAS 3/8, 1 1/4 WAS 1 1/8, 3 REQ., WAS 1/8 R. ADDED TO FACE OF DIM 1 3/32 AN525AD3.	6-16-41	
B	1/4 3/32 .080 x 2 3/8 x 11 3/16 WAS .040 x 2 3/8 x 11 3/16 - REMOVED #10 (193) DIA. HOLE (1) ADDED PBY-5A REQ'MTS.	6-16-41	
C	5/16 DIM WAS 1/4	6-19-41	
D	E.O. A-2047 1/4 WAS 1/8, ADDED 28E5763 ADDED NOTE: "GLUE TO VULCALOC" NEG. WT. CHG.	4-7-42	RDHARRIS

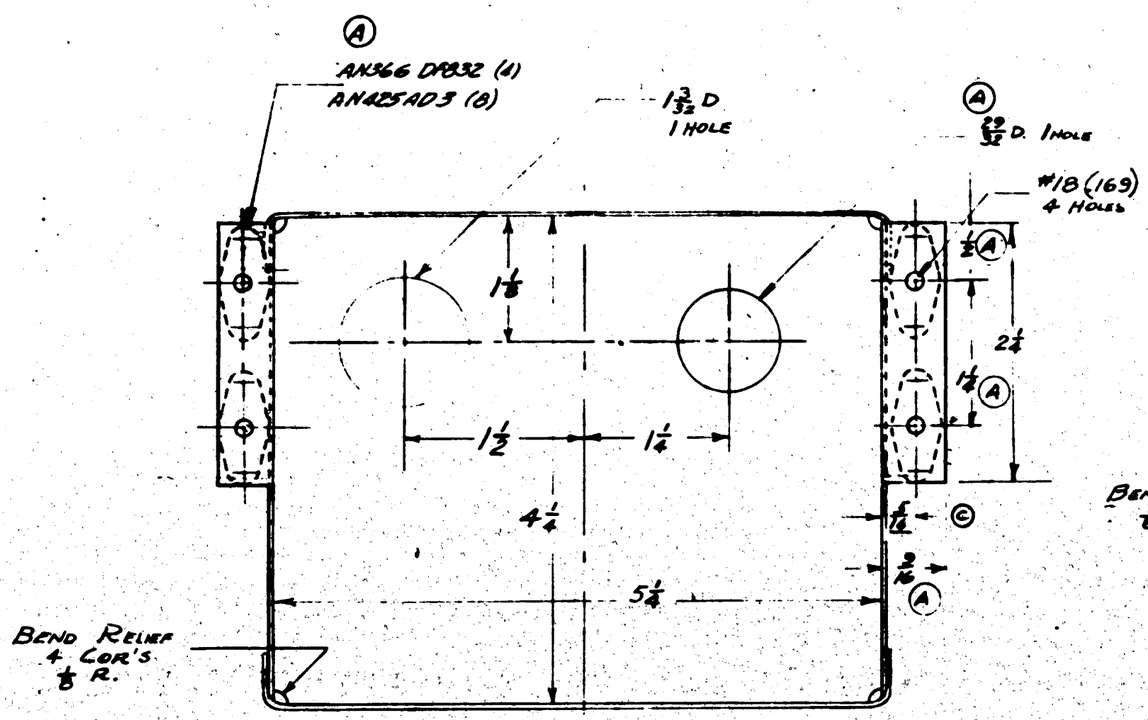

SYM.
℄
(EXCEPT CONDUIT HOLES)

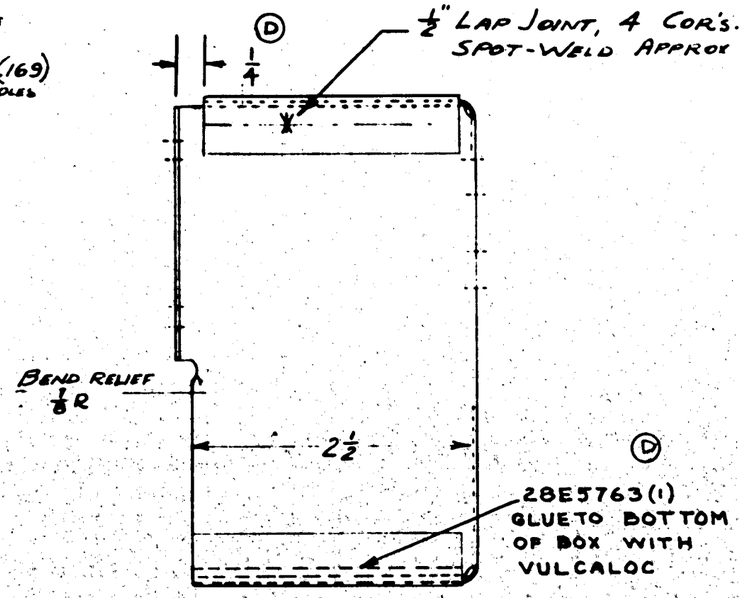

NOTES:

(1) FOR INSTL'N ON SHIPS 98 TO 200, SERIAL NO's 2386 THRU 2488, S.O.# 93644
(2) BREAK ALL SHARP CORNERS ON 1/16 R.
(3) BEND ALL CORNERS ON 1/8 R. ℄ NOTED

FINISH:
P27 PRIMER
GREEN PRIMER

CONTRACT #77713
CONTRACT #70496
SNJRS #98-200

PART No.	STOCK	MATERIAL	SPEC.	LH REQ.	RH REQ.	LH REQ.	RH REQ.	LH REQ.	RH REQ.	LH REQ.	RH REQ.	LH REQ.	RH REQ.
PARTS LIST PER ASSY.				-0		-2		-3		-4		-5	
-0	PBY-5A	28E5073	1										
-0	PBY-5	28E5073	1										
28E5763				1									
AN525AD3				4									
AN366DD32				1									
-6	.040 x 3 7/8 x 11 1/16 24ST ALC 4250T												

ASSY. BASH No. | MODEL | NEXT ASSY. | REQ.

REQUIREMENTS PER AIRPLANE

REPLACES | .25 CALC. WT.

REPLACED BY | ACT. WT.

UNLESS OTHERWISE SPECIFIED ± 1/32 | SCALE 12" = 1'0"

STAMP PART NUMBER WHERE SHOWN

AC | NAVY NONE | HEAT TREAT | P&P | FINISH | 12/30/40 N. LENTZ | DRAFT | CHECK | STRUCT. | MAT | APPROV. | ENG.

NAME BOX - ELEC. - A.F.C. SWITCHES.

CONSOLIDATED AIRCRAFT CORP. SAN DIEGO, CALIF.

OPP. HAND NONE

SIZE D | DWG. 28E5072

PBY-5A, OA-10, CD AGNS

LET	ALTERATION	DATE	BY
A	CHANGED ON PARTS LIST, AN3064-B (1) MADE AN3066-B-2, REQUIRED ADDED PARTS FOR USE ON PBY-5A OR OA-10 -10 (1) & AN525-10 (1)		
B	REMOVED AN3065-832-B (1) ADDED	4-15-42	
	ADDED PARTS		
	ADD PBY-5A OA-10		
C	E.O. 20975 RELOCATED 28E5072 FOR PBY-5A #398 & ON NO. WT. CHG	9-14-42	

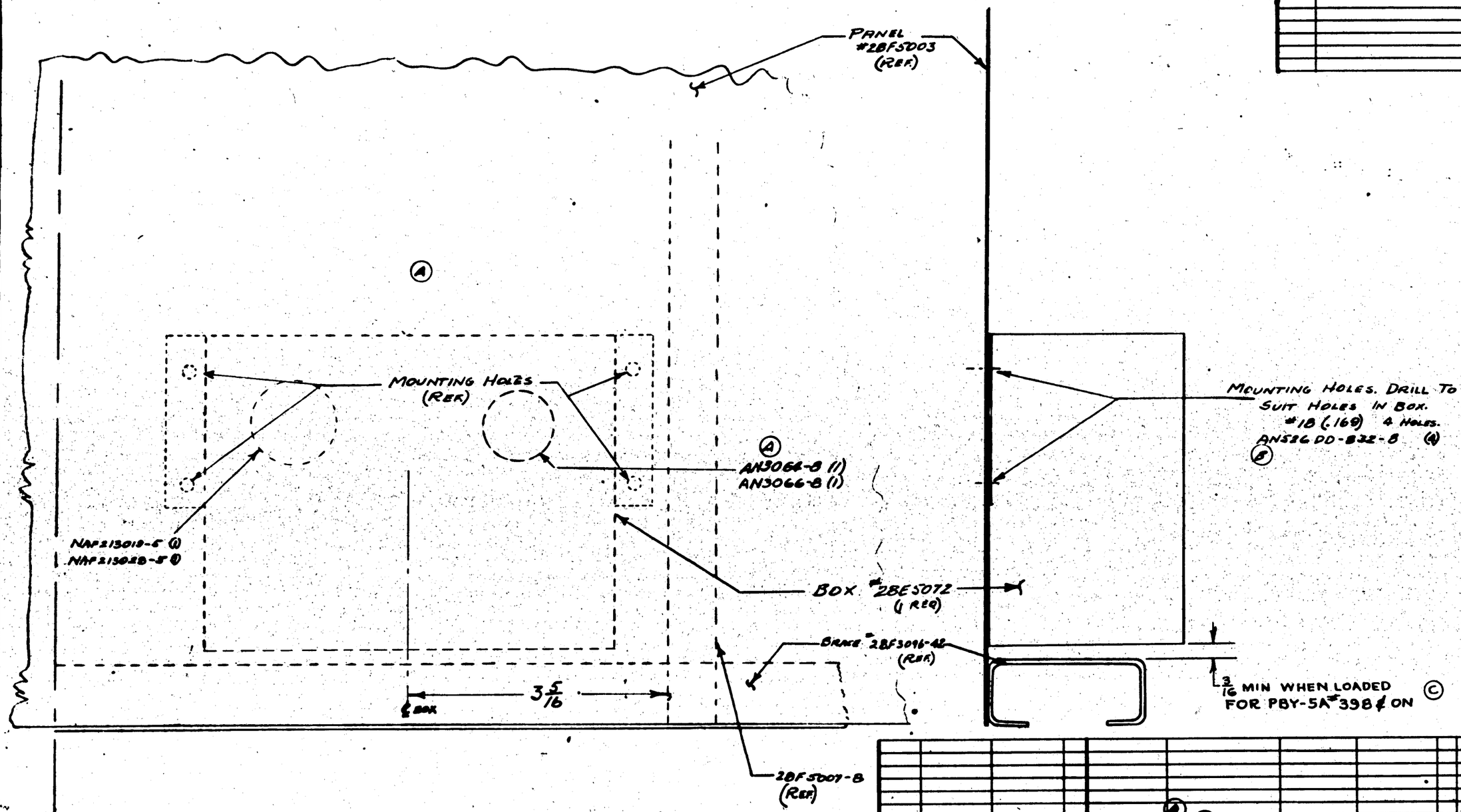

CONTRACT #77713 (B)
CONTRACT #70496

#398 ON C.70496

ASSY. DASH No.	MODEL	NEXT ASSY.	QUAN.
-0	PBY-5A	28E5003	1
-8	PBY-5	28F5003	1

REQUIREMENTS PER AIRPLANE

REPLACED — QUAN. WT. .4

REPLACED BY — ASY. WT.

SCALE 1/32 — 12"-10"

(STRIKE PART NUMBER WHERE SHOWN)

PART No.	STOCK	MATERIAL	SPEC.	LH REQ'D	RH REQ'D	LH REQ'D	RH REQ'D	LH REQ'D	RH REQ'D	LH REQ'D	RH REQ'D	LH REQ'D	RH REQ'D
				-0		-2		-3		-4		-5	
AN3066-B (2)													
AN3064-B (1)													
NAF213018-5 (1)													
NAF213028-5 (1)													
28E5072 (1)													
AN526DD-832-8 (2)													

PARTS LIST PER ASSY.

A.C. — NAVY NONE — HEAT TREAT — TO METAL PANEL — FINISH

DRAFT — CHECKED — STRUCT. — MAT — APPROV. — DATE

NAME INSTAL. - ELEC. - A.F.C. SWITCH BOX.

CONSOLIDATED AIRCRAFT CO. SAN DIEGO, CALIF.

OPP. HAND NONE

SIZE D — 28E5073

LET	ALTERATION	DATE	BY

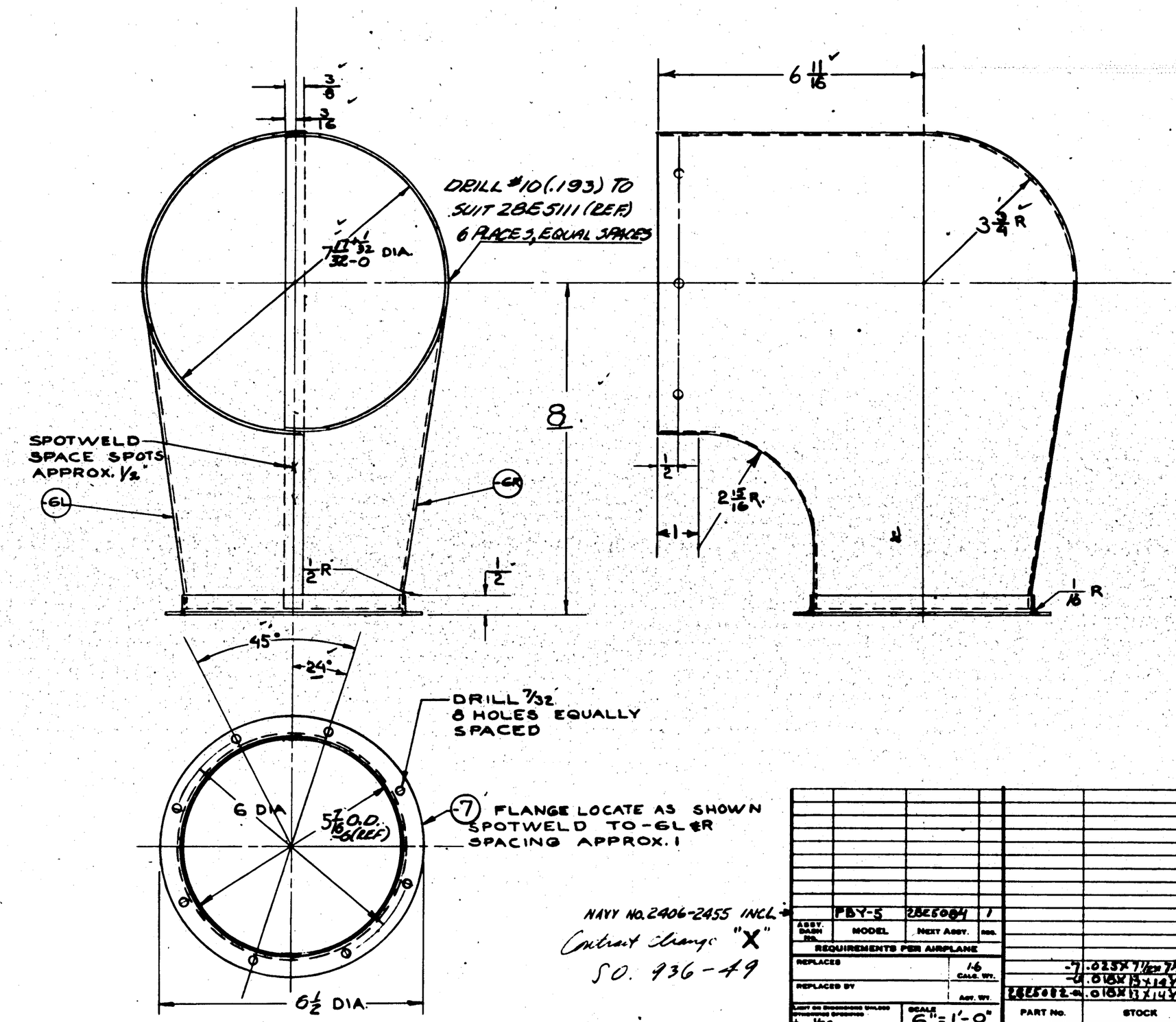

NAVY NO. 2406-2455 INCL.
Contract change "X"
SO. 936-49

ASSY. DASH NO.	MODEL	NEXT ASSY.	REQ.
	PBY-5	28E5084	1

REQUIREMENTS PER AIRPLANE

REPLACES — CALC. WT. 16

REPLACED BY — ADV. WT.

UNLESS OTHERWISE SPECIFIED ± 1/32 — SCALE 6" = 1'-0"

STAMP PART NUMBER WHERE SHOWN

PART No.	STOCK	MATERIAL	SPEC.	LH REQ.	RH REQ.	LH REQ.	RH REQ.	LH REQ.	RH REQ.	LH REQ.	RH REQ.	LH REQ.	RH REQ.
PARTS LIST PER ASSY.				-0		-2		-3		-4		-5	
-7	.025 X 7 11/32 DIA 7 3/4	ST. STL	47519 GR.150	1									
-9	.016 X 5 X 14 1/2	ST. STL SHT.	47519 GR.185	1									
28E5082-9	.016 X 13 X 14 1/2	ST. STL SHT.	47519 GR.185	1									

AC								
NAVY NONE	NONE	2-21-41	K.A. Kerr	[illegible]	[illegible]		[illegible]	1741
HEAT TREAT	FINISH	DRAFT	CHECK	STRUCT	MAT	APPROV	ENG.	

NAME ELBOW ASS'Y-AIR OUTLET-LOWER AUX. POWER PLANT — OPP. HAND —

CONSOLIDATED AIRCRAFT CORP. SAN DIEGO, CALIF. — SIZE D — 28E5082

LET	ALTERATION	DATE	BY

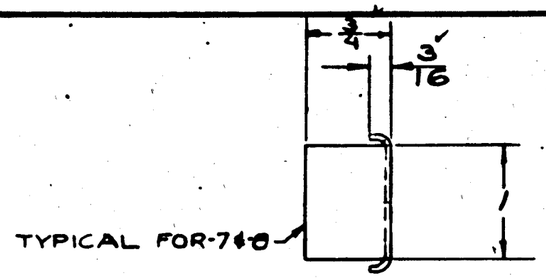

VIEW A-A

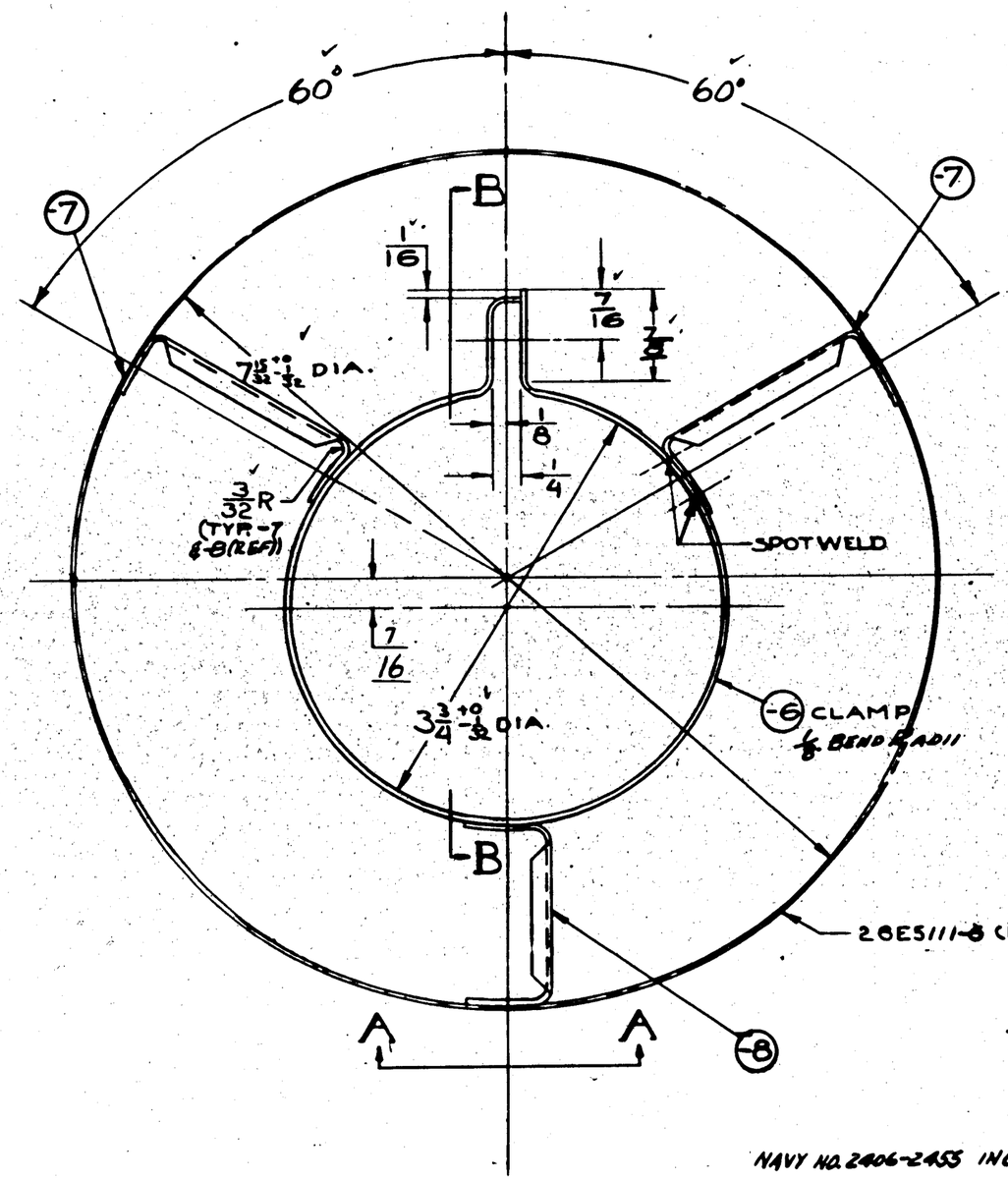

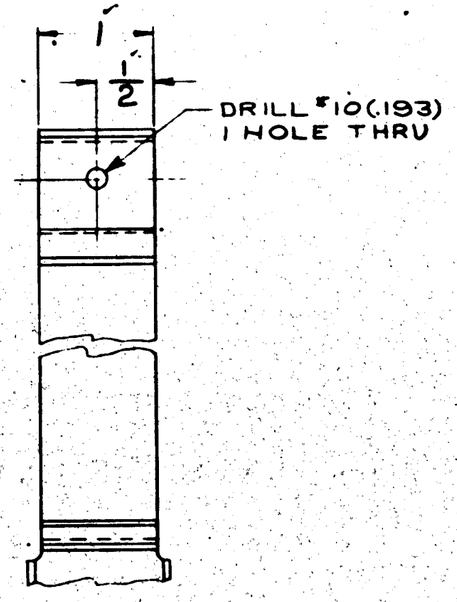

SECT. B-B

NAVY NO. 2406-2455 INCL.
S.O. 936-49

ASST. SALES No.	MODEL	NEXT ASSY.	REQ.
	P8Y5	26E5111	2

REQUIREMENTS PER AIRPLANE

REPLACES — # CALC. QTY.

REPLACED BY — ASY. QTY.

SCALE 12" = 1'-0"

STAMP PART NUMBER WHERE SHOWN

PART No.	STOCK	MATERIAL	SPEC.	LH REQ.	RH REQ.	LH REQ.	RH REQ.	LH REQ.	RH REQ.	LH REQ.	RH REQ.	LH REQ.	RH REQ.
-8	.031 x 3½ x 41½	STL SHT	4130 ANN CRES	1									
-9	.031 x 4½ x 11½	STL SHT	4130 ANN CRES		2								
26E5083-6	.025 x 3½ x 4½ x 11½	STL SHT	4130 ANN CRES	1									

PARTS LIST PER ASSY.

LET	ALTERATION	DATE	BY

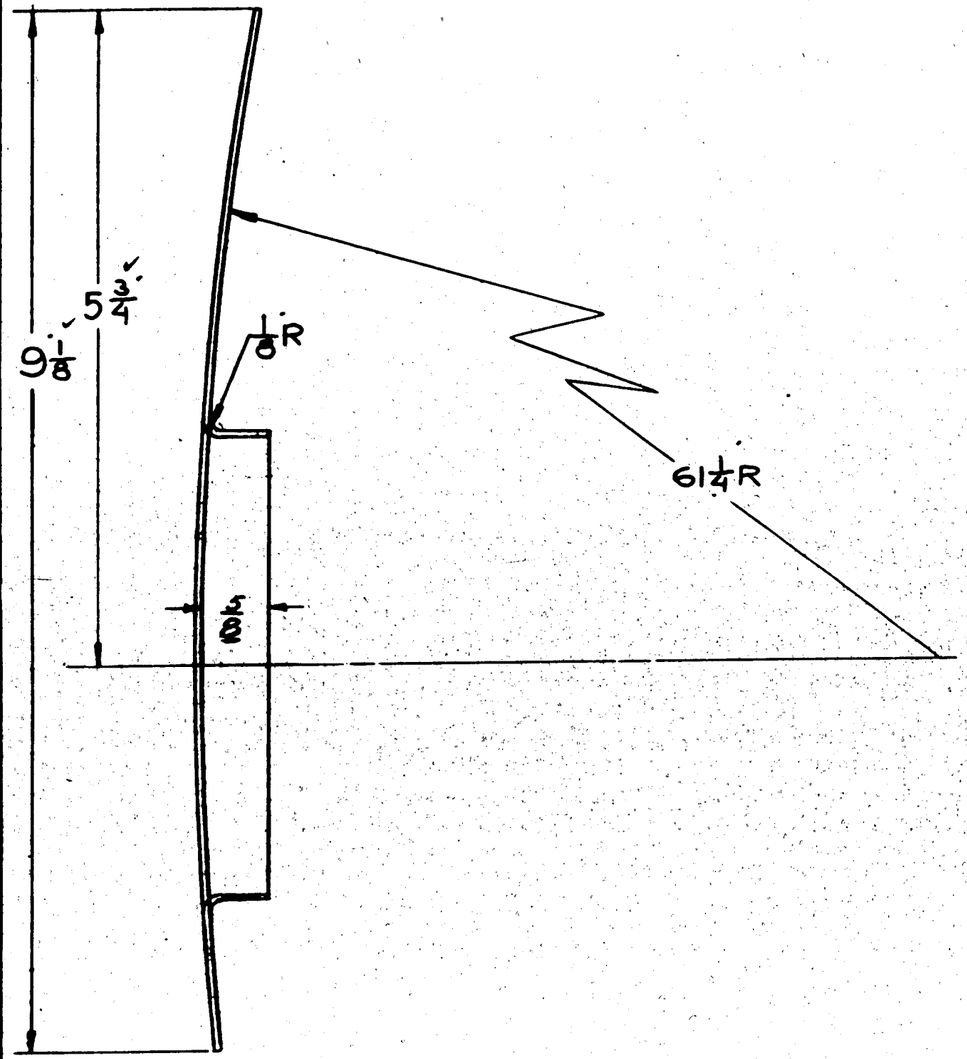

SECTION A-A
12"=1'-0"

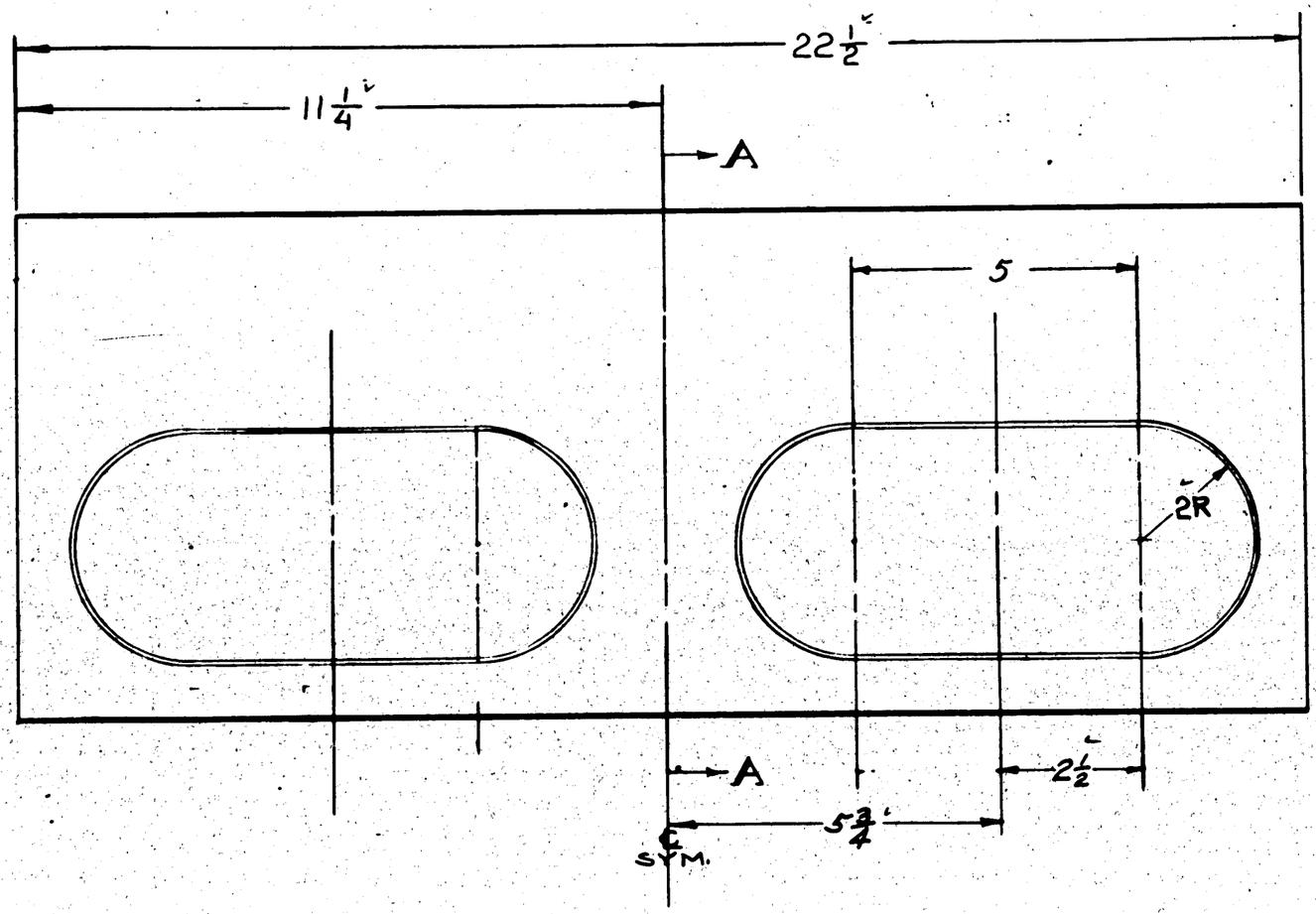

NOTE:
1. H.T. - 3R53 AFTER FORMING.
2. FINISH E-P-2AP NAVY NO. 2406-2455 INCL
Contract change "X"
S.O. 936-49

ASSY. DASH NO.	MODEL	NEXT ASSY.	REQ'D.
	PBY-5	28E5092	1

REQUIREMENTS PER AIRPLANE

REPLACES		1.13 CALC. WT.
REPLACED BY		ACT. WT.
UNLESS OTHERWISE SPECIFIED ± 1/32	SCALE 6"=1'-0" & NOTED	

STAMP PART NUMBER WHERE SHOWN

PART NO.	STOCK	MATERIAL	SPEC.	LH REQ. -0	RH REQ. -2	LH REQ. -3	RH REQ. -4	LH REQ. -5	RH REQ.
	.051 X 23 X 95/8	2450 ALC.	47A2 COND A	1					

PARTS LIST PER ASSY.

A.C.		KAREL M KAN					
NAVY NOTED	NOTED	2-7-41					
HEAT TREAT	FINISH	DRAFT	CHECK	STRUCT.	MAT'L	APPROV.	ENG.

NAME HULL OPENING PLATE — AIR DUCT — AUX. POWER PLANT
CONSOLIDATED AIRCRAFT CORP. SAN DIEGO, CALIF.

OPP. HAND
DWG. SIZE D
28E5087
R

LET	ALTERATION	DATE	BY
A	CREATED -7, & ADDED NOTE. -6 & -7 IDENTICAL EXCEPT, ETC	6-15-41	[illegible]
B	CHANGED LOCATION OF END NUT PLATES. ADDED 45° DIM.	7-3-41	KAREL

ASSY. DASH NO.	DIM. L
-0	2 1/2
-2	2

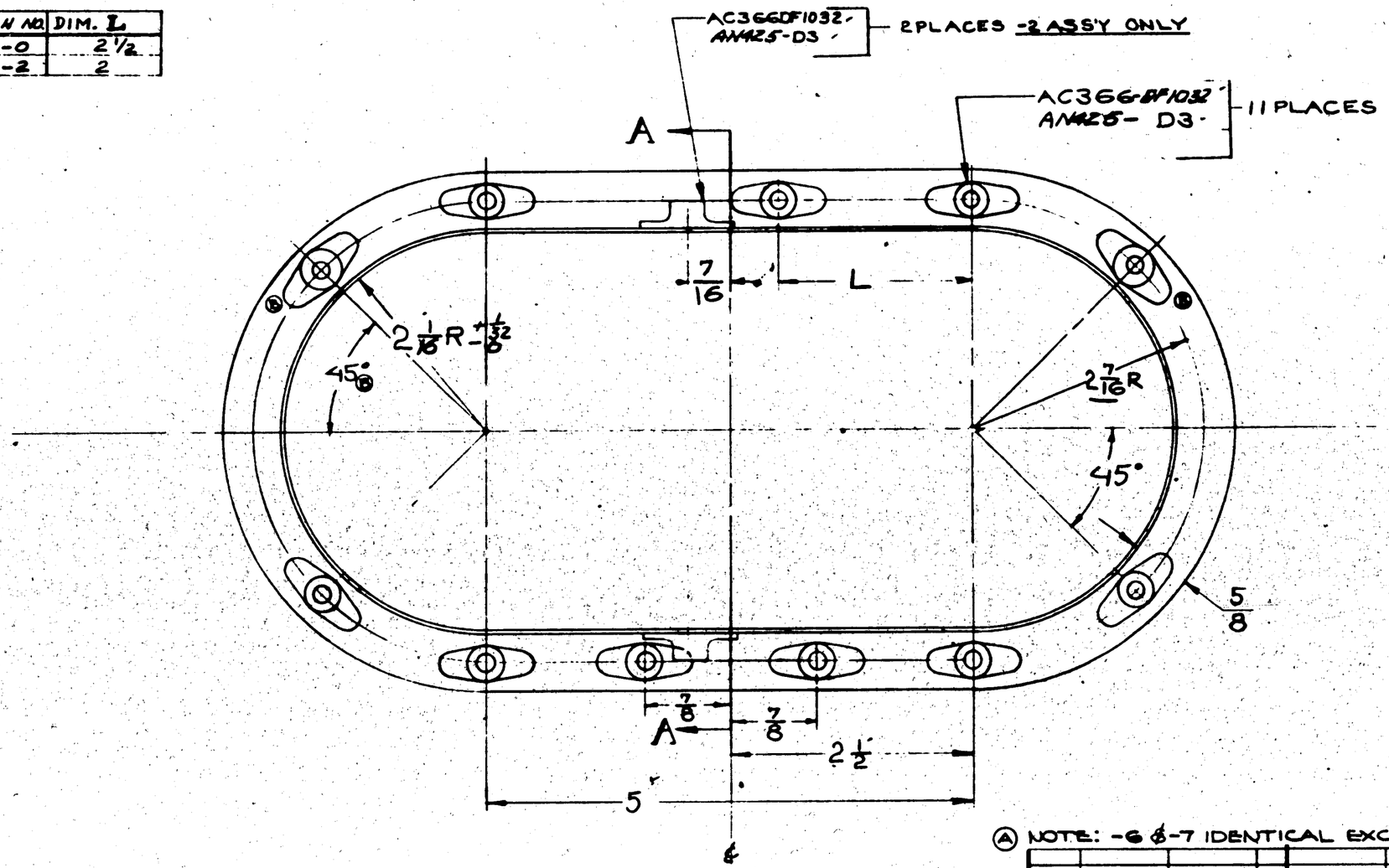

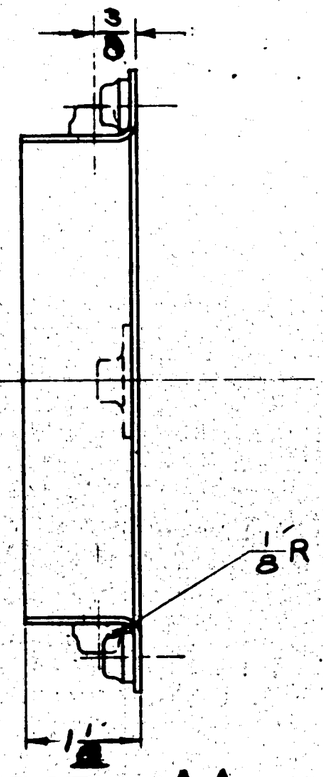

Ⓐ NOTE: -6 & -7 IDENTICAL EXCEPT FOR HOLES.

NAVY NO. 2406-2455 INCL
S.O. 936-49

ASSY. DASH NO.	MODEL	NEXT ASSY.	REQ.
-2	FBY3	28E5091	1
-0	FBY-5	28E5092	1

REQUIREMENTS PER AIRPLANE

REPLACES — ASY. WT. 30 (est.)

REPLACES BY — ASY. WT.

UNLESS OTHERWISE SPECIFIED: ± 1/32, 3 1/2° — SCALE 12"=1'-0"

STAMP PART NUMBER WHERE SHOWN

AN425-D3 — 6 10

-7 (SEE NOTE ABOVE) — 1

PART NO.	STOCK	MATERIAL	SPEC.	LH REQ.	RH REQ.	LH REQ.	RH REQ.	LH REQ.	RH REQ.	LH REQ.	RH REQ.	LH REQ.	RH REQ.
28E5088-3	.050 X 6 X 11	2450 ALC	47AB CONDX	1									
				-0	-2	-3	-4	-5					

PARTS LIST PER ASSY.

AC		KAREL	6-15-41	[illegible]	
NAVY SR-53	Z-D-AP	2-3-41	[illegible]		
HEAT TREAT	FINISH	DRAFT	CHECK	STRUCT	MAT'L APPROV. ENG.

NAME FLANGE ASSY-AIR DUCT AUX. POWER PLANT — OPP. HAND —

CONSOLIDATED AIRCRAFT CORP. SAN DIEGO, CALIF. — SIZE D — 28E5088

LET	ALTERATION	DATE	BY

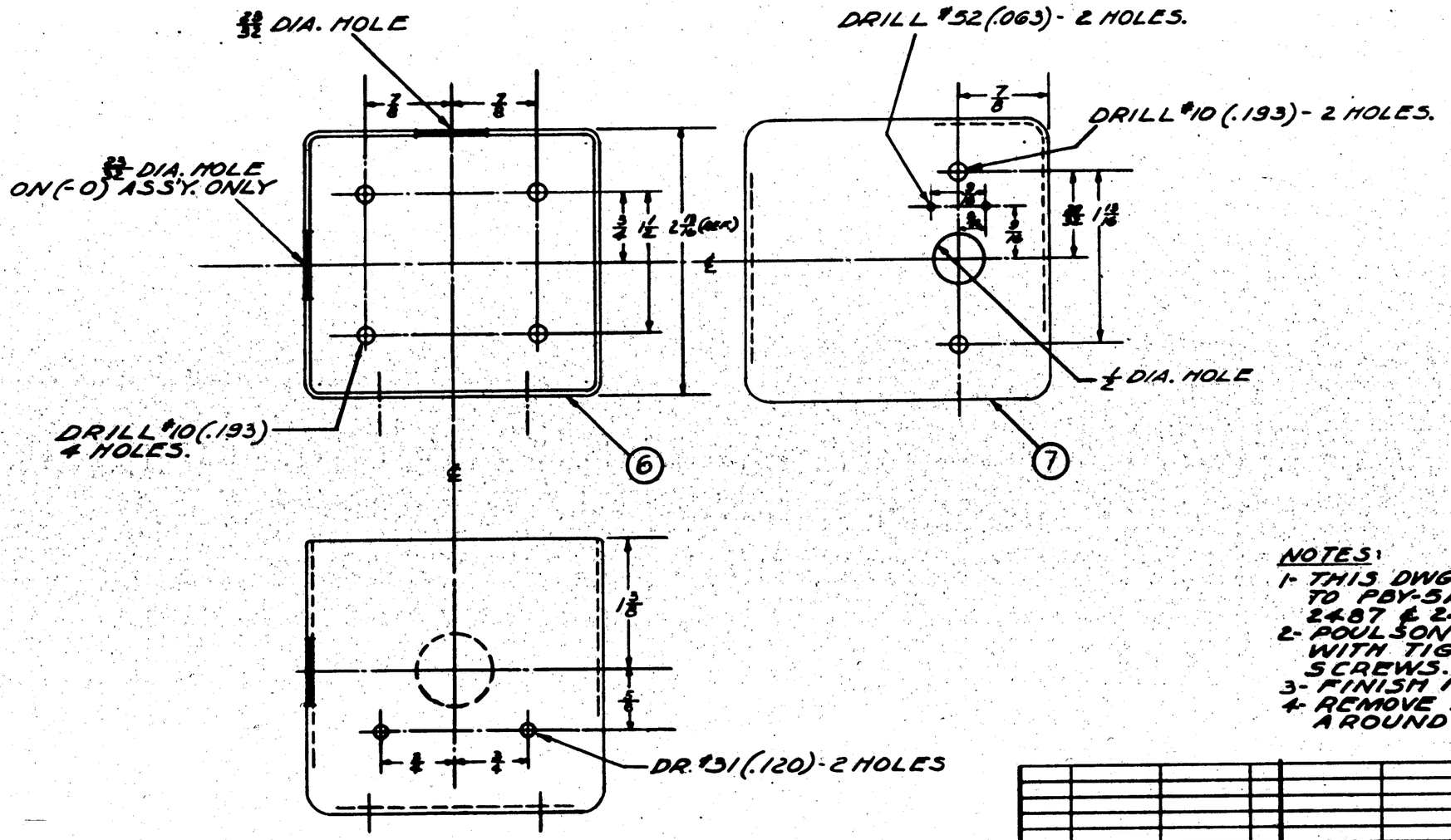

NOTES:
1- THIS DWG (#28E5094) IS APPLICABLE TO PBY-5A SHIPS - SERIAL NOS 2486, 2487 & 2488 ONLY.
2- POULSON & NARDEN BOX TO BE FURNISHED WITH TIGHT FITTING COVER & NON-LOSABLE SCREWS.
3- FINISH INSIDE P. FINISH OUTSIDE P-AP.
4- REMOVE FINISH FOR 3/32 RADIALLY AROUND CONDUIT HOLE IN BOX.

ASSY. DASH No.	MODEL	NEXT ASSY.	REQ.
-2	PBY-5A NOTE 6	28E5091-6	2
-0	PBY-5A NOTE 6	28E5091-6	1

REQUIREMENTS PER AIRPLANE

REPLACES — GALS. WT.
REPLACED BY — ASY. WT.

UNLESS OTHERWISE SPECIFIED: ± 1/32 — SCALE 12"=1'-0"

PART No.	STOCK	MATERIAL	SPEC.	LH REQ. -0	RH REQ. -0	LH REQ. -2	RH REQ. -2	LH REQ. -3	RH REQ. -4	LH REQ. -4	RH REQ. -5
28E5094-2	PLN COVER 28E5-200					1					
28E5094-3	PLN BOX 28E5-201 N							1			

PARTS LIST PER ASSY.

AC — NAVY NONE — HEAT TREAT — NOTED — FINISH

DRAFT: Booher 3/18/44 — CHECK — STRUCT — MAT — APPROV — ENG.

NAME: SWITCH BOX-ELEC. CAMERA SIGNAL

OPP. HAND: NONE

CONSOLIDATED AIRCRAFT CORP. San Diego, Calif.

SIZE D — 28E5094

R

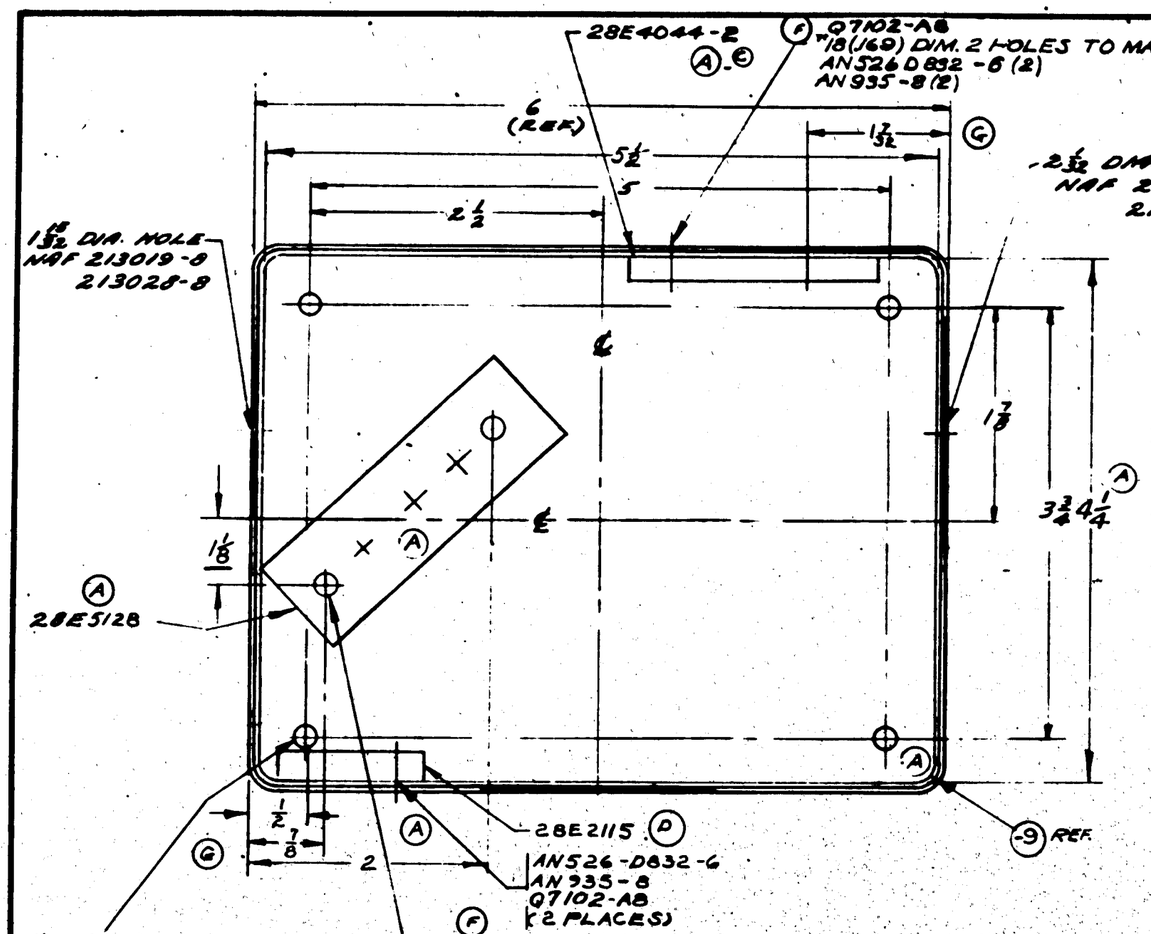

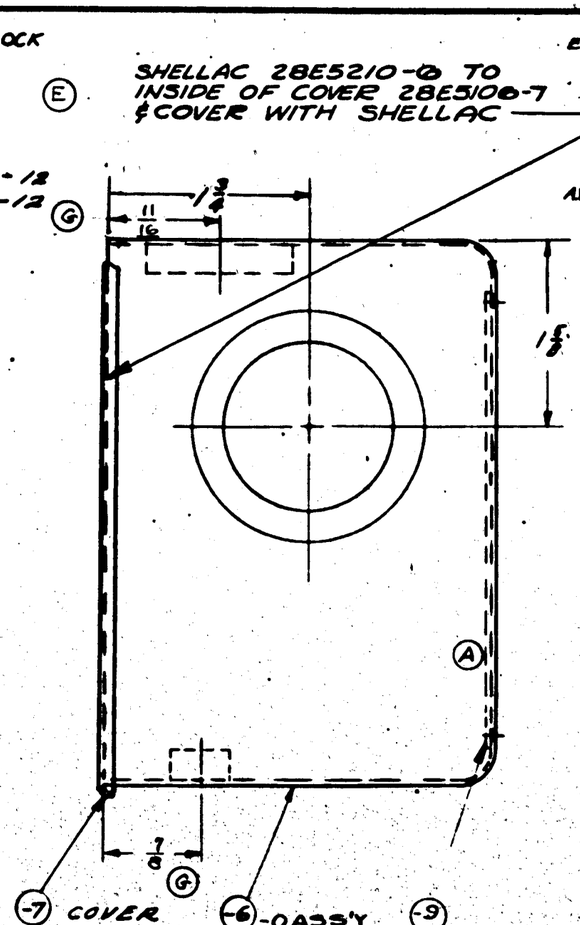

LET	ALTERATION	DATE	BY
A	REMOVED 28E5106-5 AN526D832-9(4) -8(4) FACE & 5/8 REPLACED AN526D832-6 (2) WAS (1) AN935-8 (2) WAS (1) AN960D8 (2) WAS (1) ADDED 528Q1032-7(2), AN935-10(2), AN960A10(2), -9 & 28E5128(1) IN 5/8 ADDED AN526D832-9(4)	6-11-41	DICK
B	REPLACED AN526D832-5 WITH AN526D832-6	6-12-41	
C	ON DRAWING & P/N CHANGED 28E4044-3 TO 28E4044-2	6-24-41	BLAT
D	ADDED 28E2115 (1) AN526-D832-6 (2) AN935-8 (2) AN960D8(2) TO FACE & 5/8	6-18-41	HDK
E	ADDED 28E5210-6 (1) & NOTE "SHELLAC 5th" WT. CHG. NEG"	6-3-41	
F	Q7102-AB(2) WAS AN960D8 Q7102-A10(2) WAS AN960A10(2) WT. CHANGE	6-3-41	
G	REMOVED 1/8; 1/4; 3/32, & 9/16 DIMS ADDED 11/16; 17/32; 1 3/4 & 7/8 DIMS. NO WT. CHG.	9-20-41	
H	CREATED -2 ASS'Y WT. .40# WAS .76#	10-8-41	
J	REMOVED (1) REQ'D FOR -10 FOR -0 ASS'Y NO WT. CHG.	3-9-43	

E.O. A7611 PBY-5

E.O. A7925 PBY-5

A34912 C/O

E.O. A7381 2

E.O. A6053 5

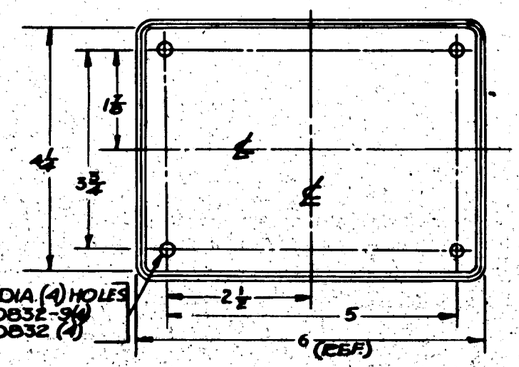

DETAIL OF -10 BOX
FOR -2 ASS'Y
SCALE 6"-1'-0"

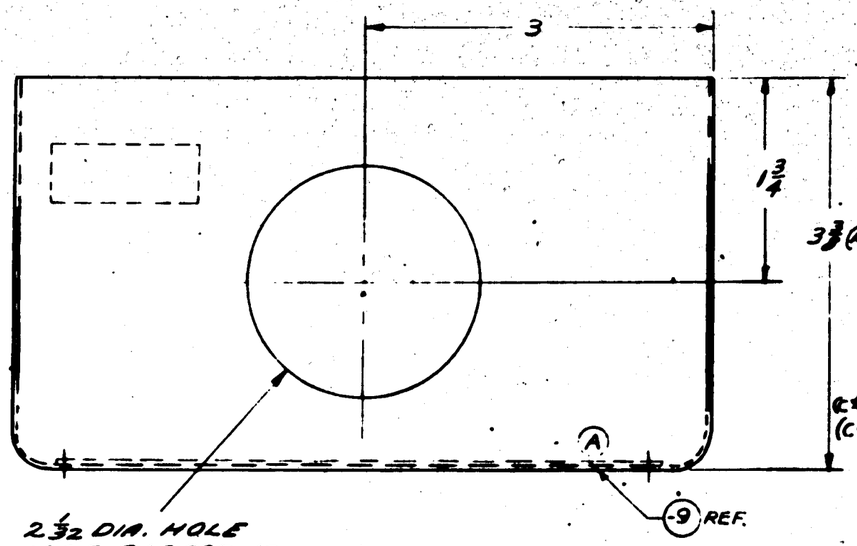

ASSY. DASH No.	MODEL	NEXT ASSY.	QTY.
-2	PBY-5A	28E5301	1
-2	PBY-5	28E5301	1
-0	PBY-5	28E4014	1

C.# 18505 → (C#91876) #91 & ON
(C#70496) #118 & ON
(C#91876) #1-90

REQUIREMENTS PER AIRPLANE

REPLACES — REPLACED BY — ACT. WT. — CALC. WT. -0: 7.6# -2: 8.4#

SCALE 12" = 1'-0" & NOTED

STAMP PART NUMBER WHERE SHOWN

PART NO.	STOCK	MATERIAL	SPEC.	LH REQ. -0	RH REQ. -2	LH REQ. -3	RH REQ. -4	LH REQ. -5	RH REQ.
28E5210-6				1					
Q7102-A10				2					
Q7102-AB				4					
28E-B				4					
526D1032-7				2					
526A832-B				4					
AN365D832				4	4				
AN935-10				2					
AN526D832-9				4	4				
213892-12				1					
213028-12				2					
213028-8				1					
213019-8				1					
213019-8				1					
28E2115				1					
28E5128				1					
28E5106-5				1					
-10	P&N 1244-312N				1				
-9	051154 x 4½		EAST DUBL.	1	1				
-7	P&N 1244-350			1	1				
-6	P&N 1244-312N			1	1				

PARTS LIST PER ASSY.

NOTES

1. FINISH INSIDE P FINISH OUTSIDE PAD REMOVE FINISH 3/32 RADIALLY AROUND HOLES.
2. BOX MAY BE PURCHASED FROM POULSEN & NARDON 1244-312N. TO BE WITH P&N COVER #1244-350 TIGHT FITTING COMPLETE WITH WASH. & NON-LOSABLE SCREWS

A C		3-31-41	Booher		NOVAK		
NAVY NONE	NOTED	GALLEY	3-31-41				
HEAT TREAT	FINISH	DRAFT	CHECK	STRUCT	MAT	APPROV	ENG.

NAME BOX ASSY.-ELEC-WING D.C. JUNCTION

CONSOLIDATED AIRCRAFT CORP. SAN DIEGO, CALIF.

OPP. HAND NONE

SIZE D

28E5106

LET	ALTERATION	DATE	BY
A	ADDED -7 SUPPORT & ADDITIONAL PARTS	6/1/42	[illegible]
B	ADDED -2 ASSY. PBY-5 FOR N.A. 28E5268 (1 REQ'D)-LIMITED & ADDED RESTRICTIONS ON N.A. 28E5144 NO WT. CHG.	10-8-42	[illegible]

E.O. A62858

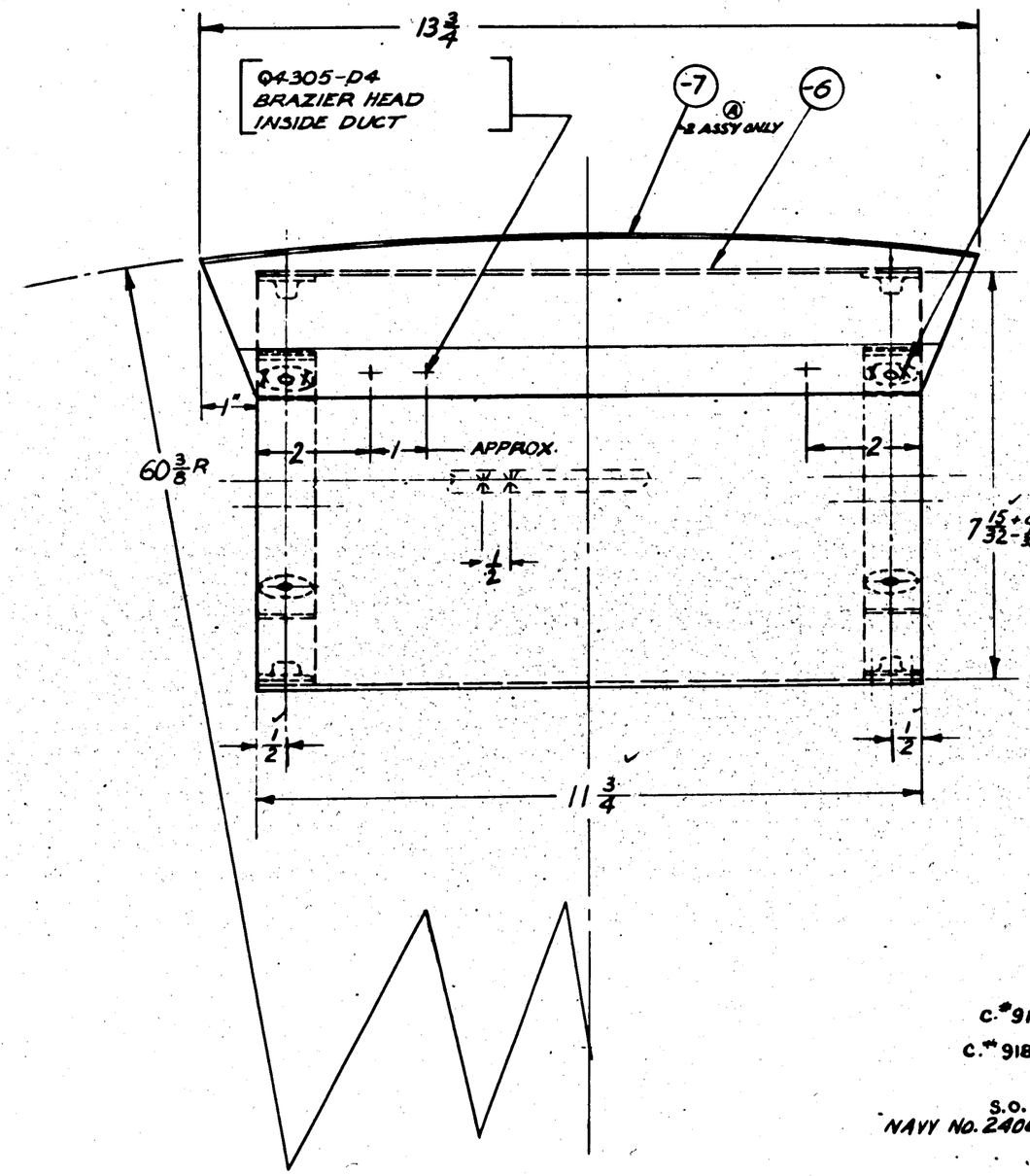

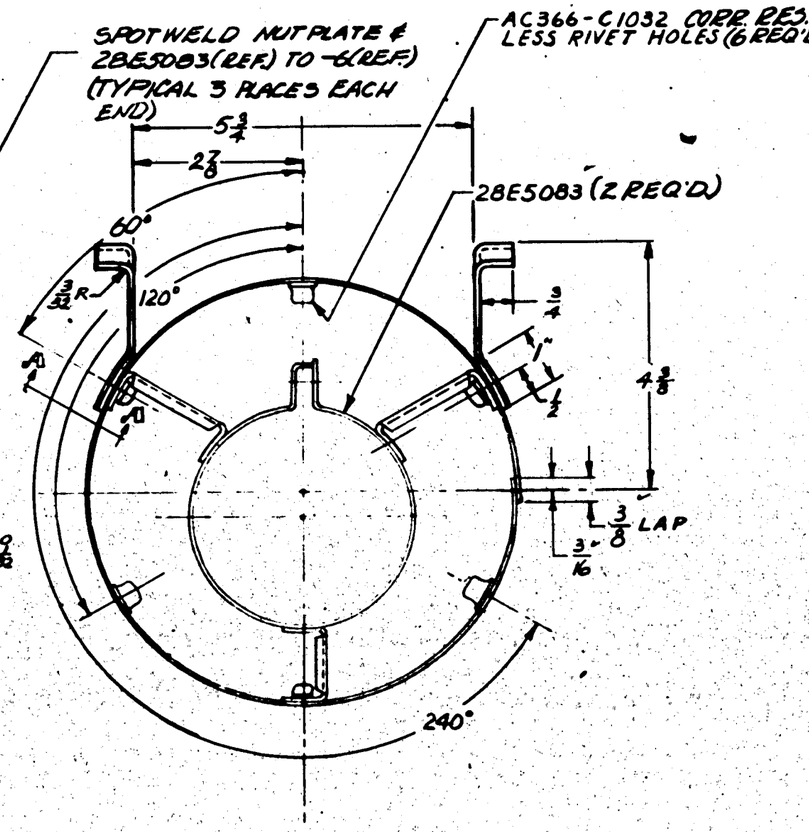

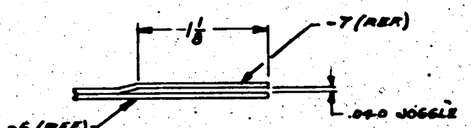

SECTION A-A
FULL SIZE
TYP. FOR BOTH ENDS

NOTE:
HEAT TREAT. -7 SR 53
FINISH -7 Z-P
FINISH -6 2 ZINC CHROMATE PRIME

C.#91876 #916 ON → -2 PBY-5 28E5268 1
C.#91876 -#1-90 → -2 PBY-5 28E5144 1
S.O. 936-49
NAVY NO. 2406-2455 INCL. → -0 PBY-5 28E5085 1

ASSY. DASH NO.	MODEL	NEXT ASSY.	REQ'D

REQUIREMENTS PER AIRPLANE

REPLACES — #CAST. WT. 487
REPLACED BY — ADV. WT.

LIMIT ON DIMENSIONS UNLESS OTHERWISE SPECIFIED ± 1/32 & 1/2°
SCALE 6" = 1'0"
STAMP PART NUMBER WHERE SHOWN

PART No.	STOCK	MATERIAL	SPEC.	LH REQ. -0	RH REQ. -0	LH REQ. -2	RH REQ. -2	LH REQ. -3	RH REQ. -3	LH REQ. -4	RH REQ. -4	LH REQ. -5	RH REQ. -5
Q4305-D4				1		1							
AC366-C1032	(CORR. RES.)						12						
28E5111-7	.060 x 4 x 3 3/4	24S-0 ALCLAD	47A8-A				2						
28E5083	✓			2		2							
28E5111 -6	.018 x 25 x 12	ST. STL. SHT.	AMS 6419 & R 150	1		1							

PARTS LIST PER ASSY.

AC		5-7-41					
NAVY NOTED	NOTED	HUDSON	CK.		NOVAK		
HEAT TREAT	FINISH	DRAFT	CHECK	STRUCT	MAT	APPROV	ENG.

NAME SLEEVE ASSY.-AIR OUTLET DUCT-L.[illegible] - AUX. P.P.
OPP. HAND
CONSOLIDATED AIRCRAFT CORP. SAN DIEGO, CALIF.
SIZE D
28E5111

LET	ALTERATION	DATE	BY
A	STR.#531 WAS 4TH INSTEAD OF 5TH FROM CHINE	4/41	
	STR.#533 WAS 5TH INSTEAD OF 4TH FROM CHINE		
B	STR.#529 WAS STR.#531.	7-10-41	
	STR.#531 WAS STR.#533.		

PBY-5 E.O. A95

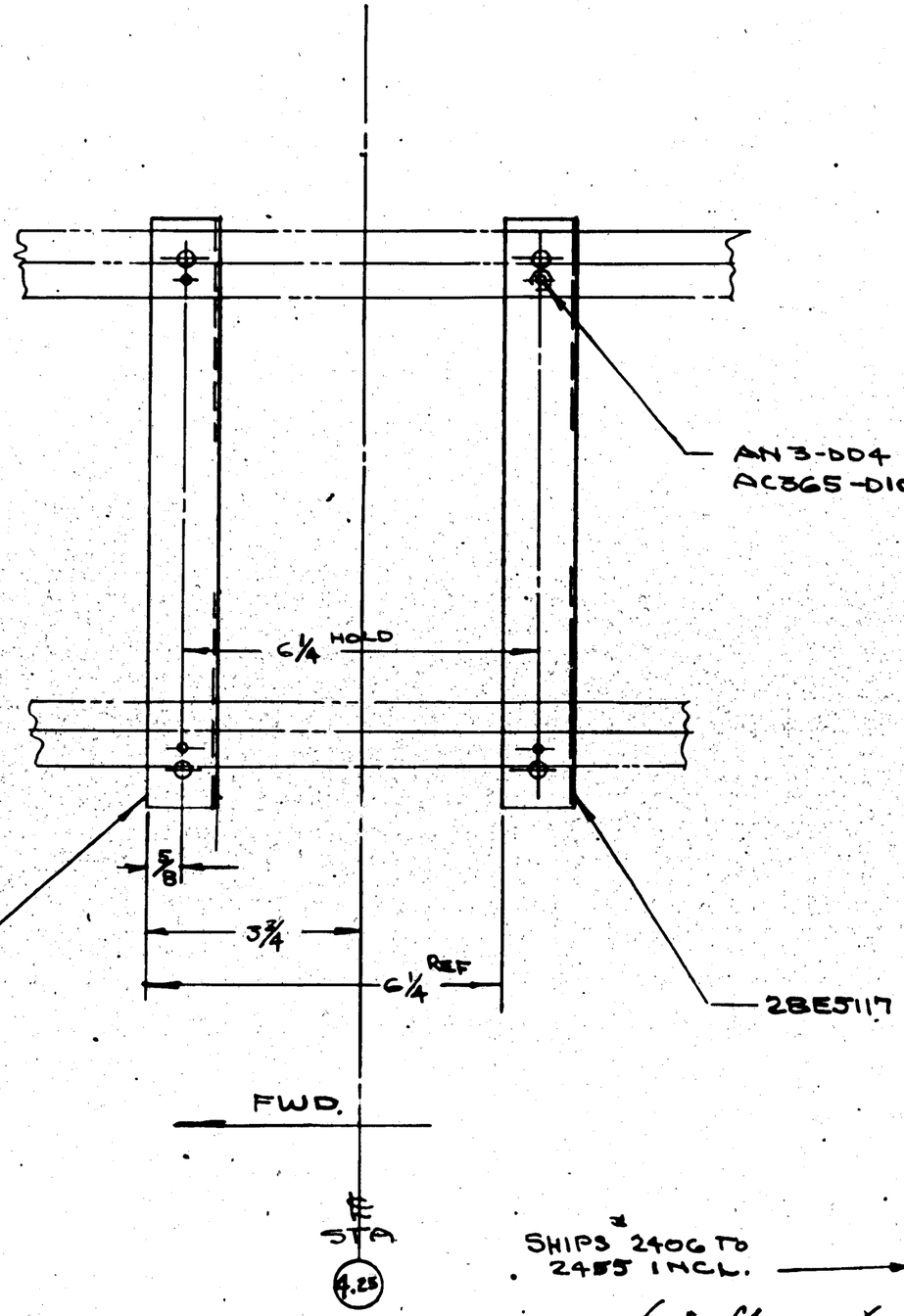

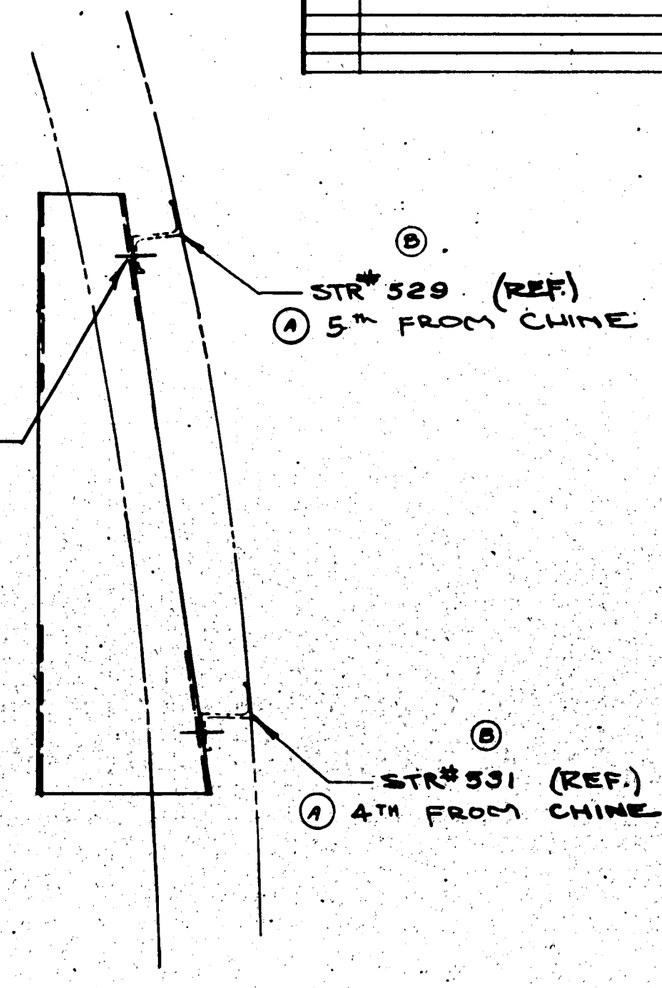

SHIPS # 2406 TO 2455 INCL.

Contr. Change X

PART NO.	STOCK	MATERIAL	SPEC.	LH REQ. -0	RH REQ. -2	LH REQ. -3	RH REQ. -4	LH REQ. -5	RH REQ.
AC365-D1032								4	
AN3-DD4								4	
28E5117								2	

PARTS LIST PER ASSY.

ASSY. DASH No.	MODEL	NEXT ASSY.	QTY.
-0	PBY-5	28E1012-DDD 1	

REQUIREMENTS PER AIRPLANE

REPLACES — CALC. WT. .18

REPLACED BY — ACT. WT.

LIGHT ON DRAWINGS UNLESS OTHERWISE SPECIFIED ± 1/32

SCALE 6" = 1'-0"

STAMP PART NUMBER WHERE SHOWN

AC

NAVY

HEAT TREAT | FINISH

DRAFT | CHECK 5-17-41 | STRUCT | MAT | ENGR.

NAME INSTALL. ELEC. BRACKET VOLT REGULATOR

OPP. HAND

CONSOLIDATED AIRCRAFT CORP. SAN DIEGO, CALIF.

SIZE D

28E5116

LET	ALTERATION	DATE	BY

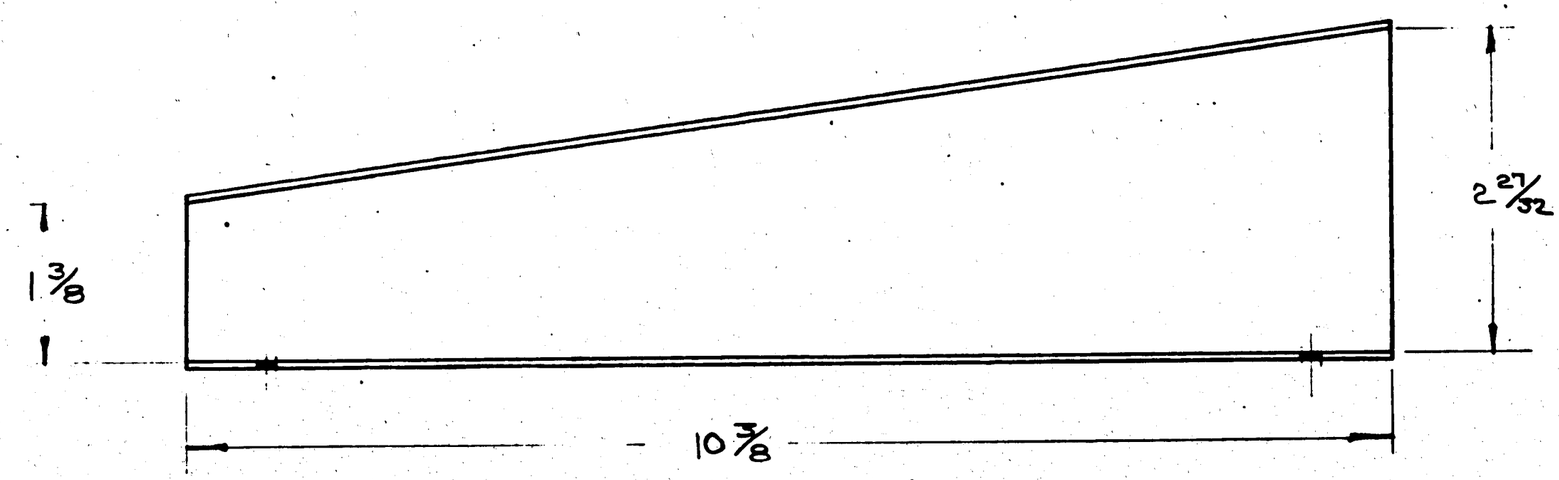

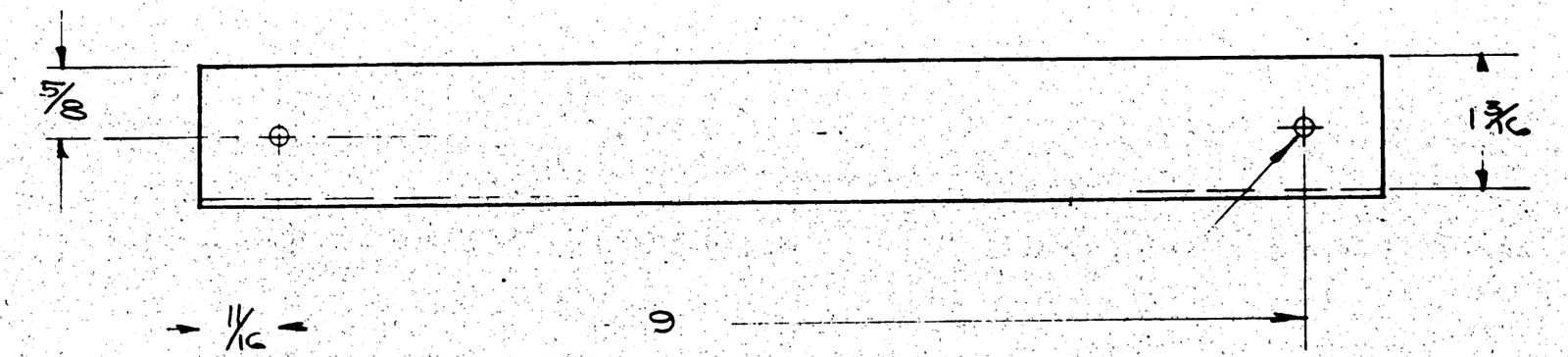

ALL BEND RADII 1/8

DRILL #10 (.193) 2 HOLES

SHIPS #2406 TO 2455 INCL
Contr Change X

ASSY. DASH NO.	MODEL	NEXT ASSY.	REQ.
	PBY-5	28E511C	2

REQUIREMENTS PER AIRPLANE

REPLACES — CALC. WT. .18

REPLACED BY — ACT. WT.

LIGHT OR SHOCKCORD UNLESS OTHERWISE SPECIFIED ± 1/32

SCALE 12" = 1'-0"

STAMP PART NUMBER WHERE SHOWN

-0 .064 x 5 1/8 x 10 1/2 ALCLAD 24ST 47A-0 CMD F

PART No.	STOCK	MATERIAL	SPEC.	LH REQ.	RH REQ.	LH REQ.	RH REQ.	LH REQ.	RH REQ.	LH REQ.	RH REQ.	LH REQ.	RH REQ.
PARTS LIST PER ASSY.				-0	-2	-3	-4	-5					

AC			Booher		MEG		
NAVY —	Z-P-AP	3/10/41	3-17-41				
HEAT TREAT	FINISH	DRAFT	CHECK	STRUCT.	MAT	APPROV	ENG.

NAME BRACKET-ELEC.—VOLT REGULATOR

OPP. HAND NONE

CONSOLIDATED AIRCRAFT CORP. San Diego, Calif.

SIZE D

28E5117

LET	ALTERATION	DATE	BY

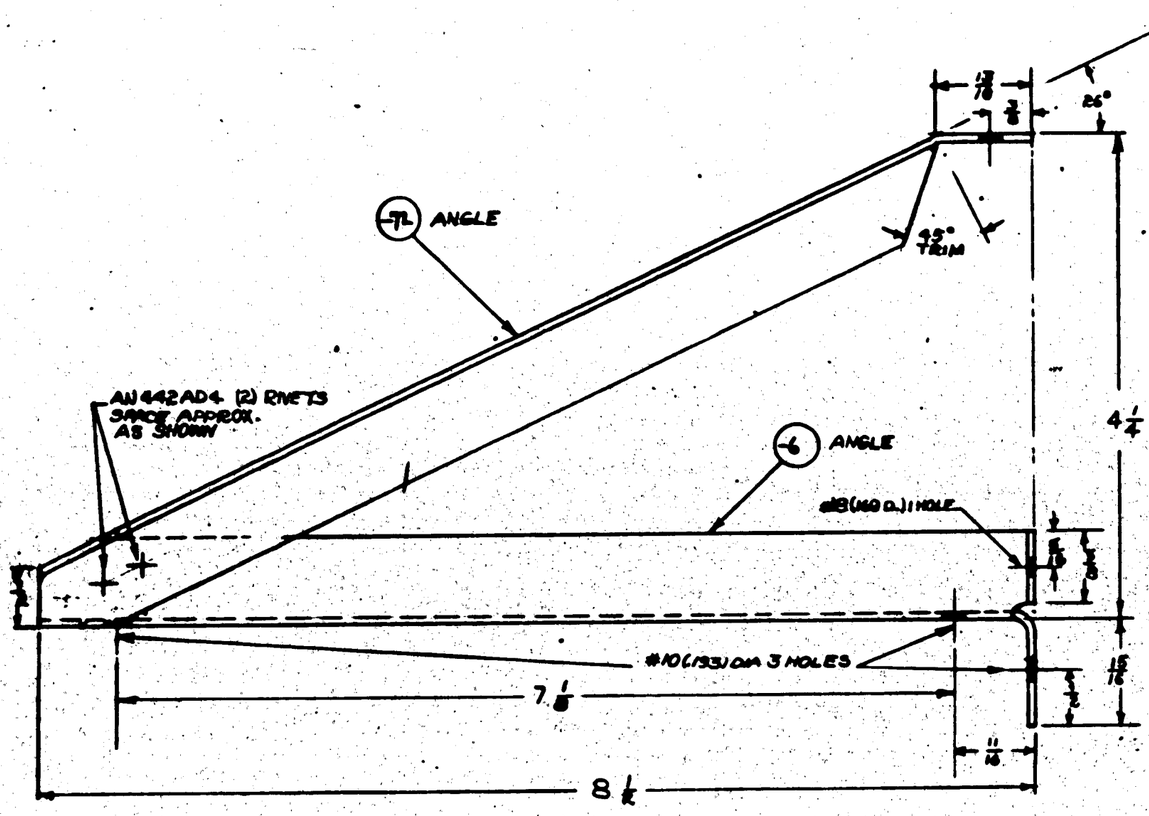

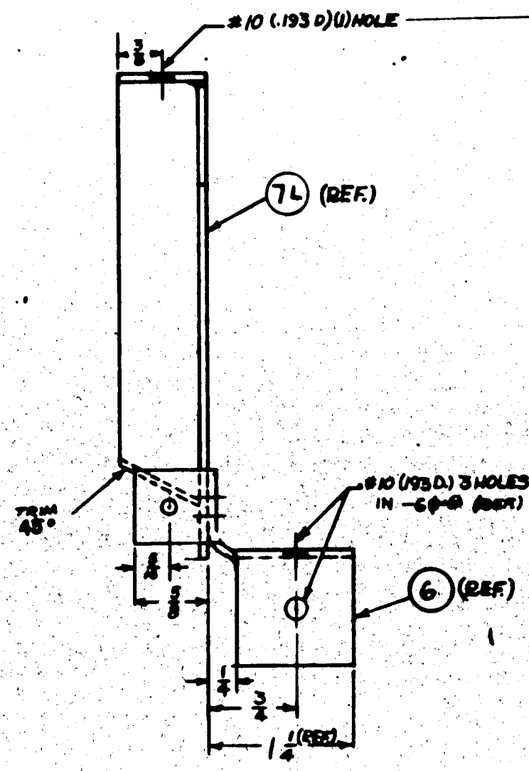

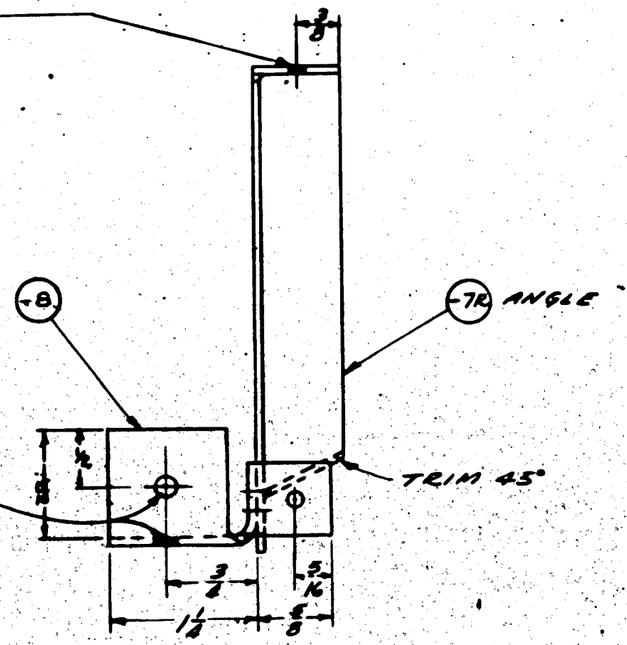

NOTE :— BEND & RELIEF RADII — 1/8

BU# 2347 - 2355 INCL.
BU# 2422 - 2427 INCL.

Note to Planning :— has been made for Bu.# 2347

ASSY. DASH No.	MODEL	NEXT ASSY.	REQ.
-0R	A8V-5	28E5030-2	1
-0L	A8V-5	28E5030-2	1

REQUIREMENTS PER AIRPLANE

REPLACES

REPLACED BY

.20 CALC. WT.

ASY. WT.

LIMIT OF DIMENSIONS UNLESS OTHERWISE SPECIFIED: ± 1/32 ∠ 1/2°

SCALE 12" = 1'-0"

STAMP PART NUMBER WHERE SHOWN

PART No.	STOCK	MATERIA	SPEC.	LH REQ.	RH REQ.	LH REQ.	RH REQ.	LH REQ.	RH REQ.	LH REQ.	RH REQ.	LH REQ.	RH REQ.
PARTS LIST PER ASSY.				-0		-2		-3		-4		-5	
AN 442 AD4				—	—								
-8	V6-53 X 9 3/4	ALC 2450	47A10 COND A	1									
-7R	K5401 X 9 3/4	ALC. 2450	46A9 COND A			1							
-7L	K5401 X 9 3/4	ALC. 2450	46A9 COND A	1									
-6	V6-53 X 9 3/4	ALC. 2451	47A10 COND A	1									

AC								
NAVY NONE	P-AP		4-11-41 Booker					
HEAT TREAT	FINISH	DRAFT	CHECK	STRUCT	MAT	APPROV	ENG.	

NAME BRACKET-ELEC.-RELAY-CURTISS WRIGHT PROPELLER

CONSOLIDATED AIRCRAFT CORP. SAN DIEGO, CALIF.

OPP. HAND 28E5120 -8

SIZE D

28E5120

Rush Released 4-15-41

LET	ALTERATION	DATE	BY

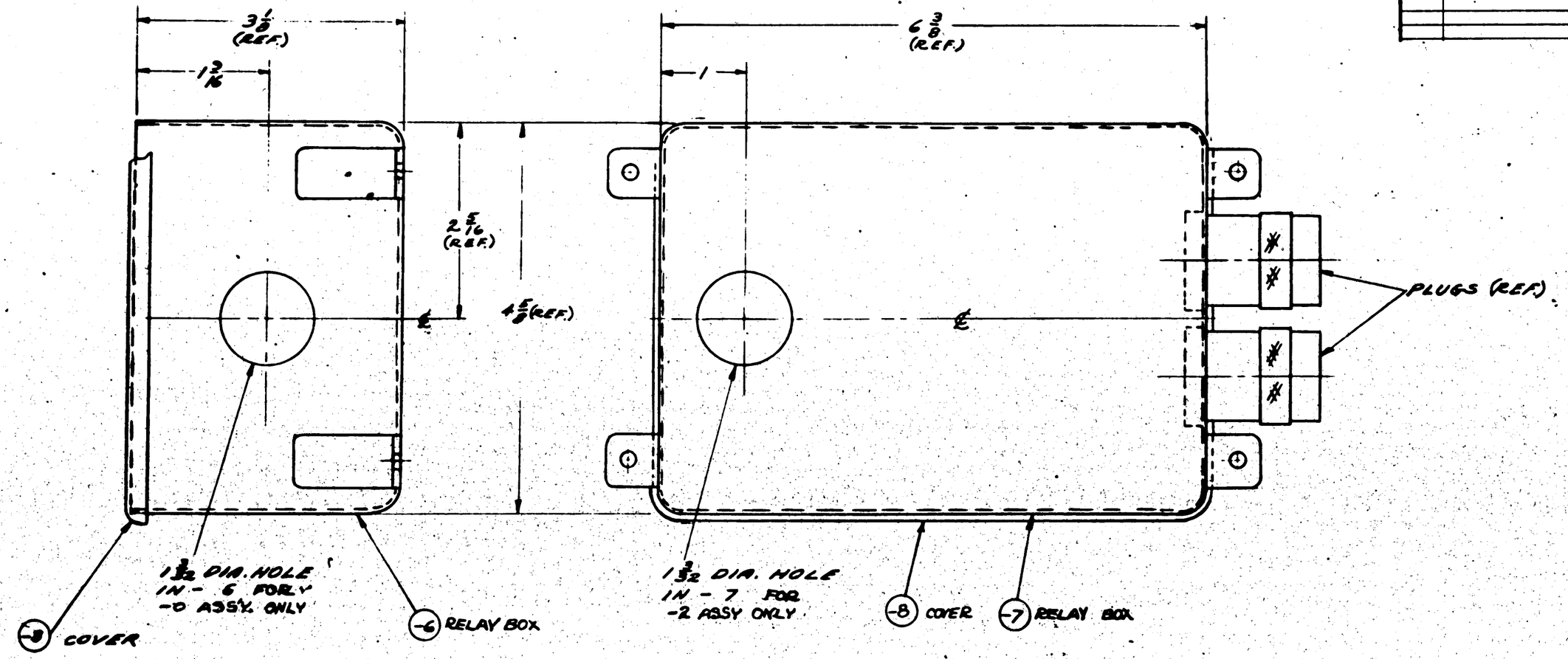

-0 ASS'Y.
END VIEW

-2 ASS'Y.
BOTTOM VIEW

BU.#2347 - 2355 INCL.
2422 - 2427 INCL.

ASSY. DASH NO.	MODEL	NEXT ASSY.	REQ.
-2	PBY-5	[illegible]-2	1
-0	PBY-5	[illegible]-2	1

REQUIREMENTS PER AIRPLANE

REPLACES — CALC. WT. 1.25

REPLACED BY — ACT. WT.

SCALE 12"=1'-0"

STAMP PART NUMBER WHERE SHOWN

NOTES:
FINISH OUTSIDE ONLY P-AP
DO NOT APPLY FINISH ON END OF RECEPTACLES
REMOVE FINISH 3/32 RADIALLY AROUND HOLES
№ 102901-13 RELAY GOV'T. FURN. COMPLETE WITH PLUGS. PLUGS TO BE RETURNED TO STOCK & USED FOR 28E5030-2 ASSY
Planning:- Has been made for Bu.# 2347
Rush Released 4-14-41

PART No.	STOCK	MATERIAL	SPEC.	LH RH REQ. -0	LH RH REQ. -2	LH RH REQ. -3	LH RH REQ. -4	LH RH REQ. -5
-9	COVER	G.F.E. WITH RELAY		1	1			
-7	RELAY	G.F.E.	102901-13		1			
-6	RELAY	G.F.E.	102901-13	1				

PARTS LIST PER ASSY.

A C		Griffith Tracy 4-1-41					
NAVY NONE	NOTED	4-1-41 Bowker					
HEAT TREAT	FINISH	DRAFT	CHECK	STRUCT.	MAT	APPROV.	ENG.

NAME RELAY - ELEC: - CURTISS WRIGHT PROPELLER — OPP. HAND

CONSOLIDATED AIRCRAFT CORP. San Diego, Calif.

SIZE D — 28E5121

LET	ALTERATION	DATE	BY
C	REDRAWN FROM "B" SIZE.	3/30/41	GRAY
D	-10 DETAIL CHANGED TO -10 SUB-ASS'Y; -14 WAS -10		
	DETAIL; & -13 ADDED.	5/29/41	GRAY
E	ADDED TO FACE & B/M -11 & SUB-ASS'Y -12	7/26/41	GRAY
F	REMOVED NOTE ABOUT CONTRACT	11	GRAY
	CHANGE X (SO THIPS	11	GRAY 12-2-41

E.O. A16095

E.O. 15432

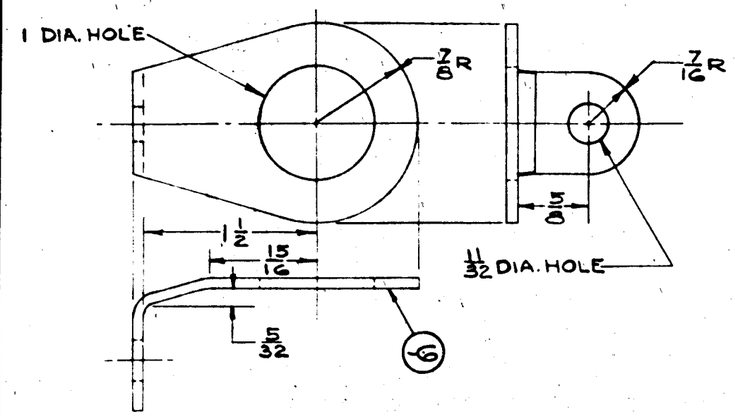

NOTE:
FLATTEN TUBING & PRESS ENDS
FIRMLY TO BRAID & SWEAT TO SOLDER.

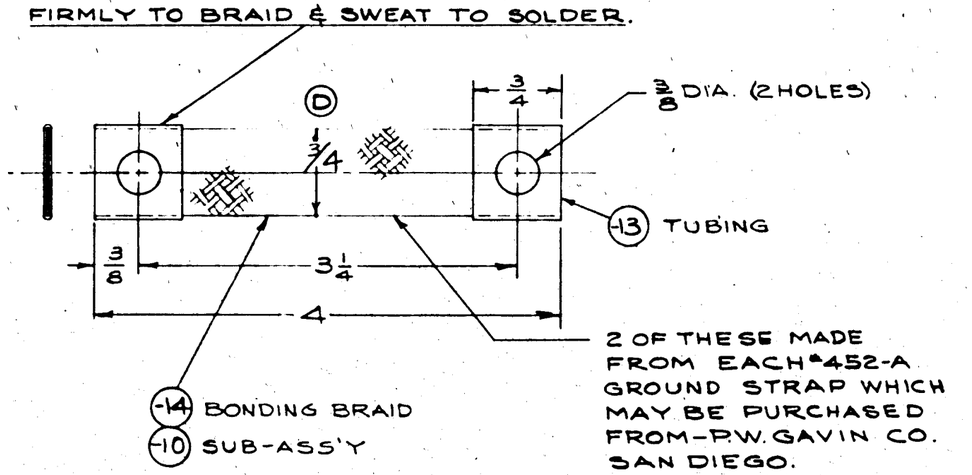

2 OF THESE MADE FROM EACH #452-A GROUND STRAP WHICH MAY BE PURCHASED FROM-P.W. GAVIN CO. SAN DIEGO.

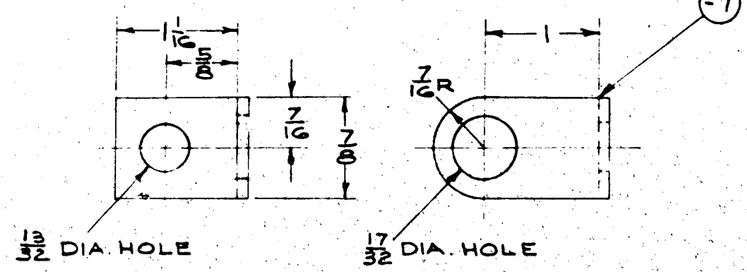

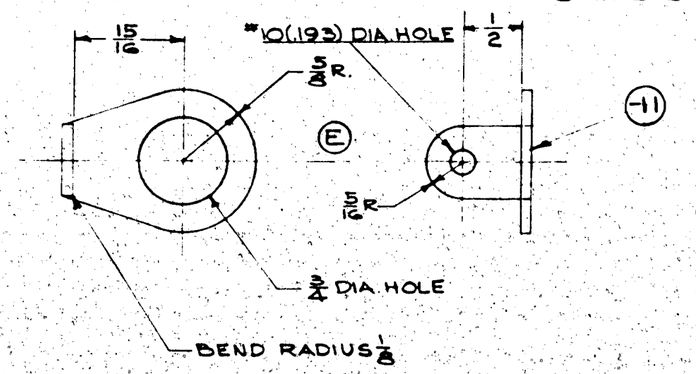

NOTE: ALL BEND RADII 1/8

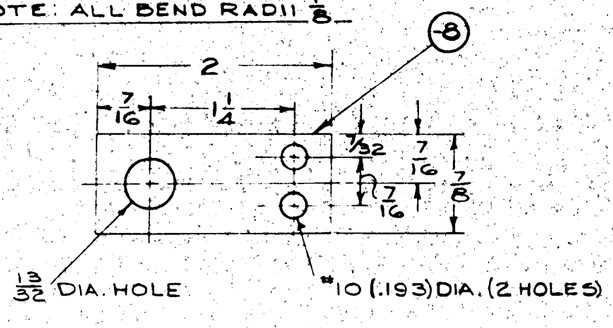

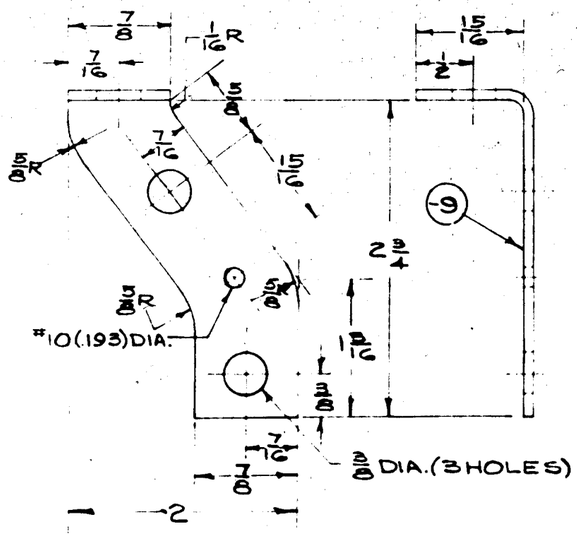

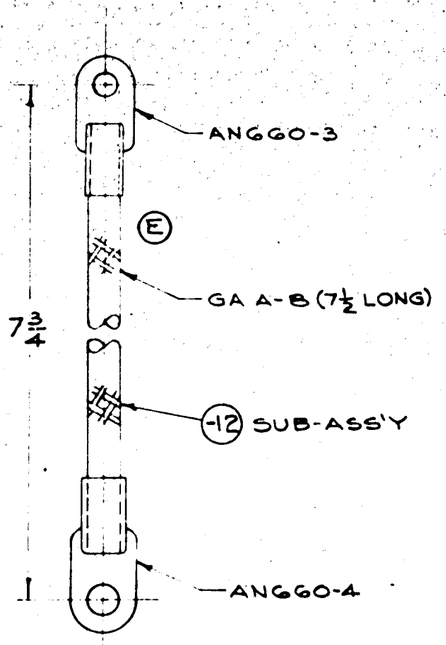

NOTE:
DIFFERENCE IN SIZE OF TERMINAL LUGS TO ACCOMODATE #10 SCREW & 1/4 SCREW.

ON SHIPS # 118 & ON

ASSY. DASH NO.	MODEL	NEXT ASSY.	REQ'D
-14	PBY-5	28E5125	1
-13	↓	↓	2
-12			1
-11			1
-10			1
-9			1
-8			2
-7			1
-6	PBY-5	28E5125	1

REQUIREMENTS PER AIRPLANE

REPLACES "B" SIZE SH'T 12-29-41 — .28 CALC. WT.

REPLACED BY — ACT. WT.

UNLESS OTHERWISE SPECIFIED: ± 1/32 — SCALE 12" = 1'-0"

STAMP PART NUMBER WHERE SHOWN

PART No.	STOCK	MATERIAL	SPEC.	LH REQ. -0	RH REQ. -2	LH REQ. -3	RH REQ. -4	LH REQ. -5	RH REQ.
	ANGGO-4	TERMINAL LUG						1	
	ANGGO-3	TERMINAL LUG						1	
	GA-A-B	7 1/2" LONG	NAVY WIRE						
	PARTS LISTED ON -12 SUB ASS'Y.								
-14	5/8" BOND BRAID	#452-A COP STRAP						1	
-13	.088 x 9/16 OD x 2	COPPER TUB (SOFT)		2					
	PARTS LISTED ON -10 SUB ASS'Y.								
-12	SUB ASS'Y								
-11	3/32 x 1 1/2 x 2 1/2	COPPER SH'T	47C2-CLA						
-10	SUB ASS'Y								
-9	3/32 x 2 x 4	COPPER SH'T	47C2-CLA						
-8	3/32 x 1 x 2 1/8	↓	↓						
-7	3/32 x 1 x 2 5/8								
28E5127-6	3/32 x 1 7/8 x 3 1/2	COPPER SH'T	47C2-CLA						

PARTS LIST PER ASSY.

AC		5-24-41	DRAWN		BMN				
NAVY NONE	C	5A1/2/A	CHECK	STRUCT	MAT	APPROV	ENG		
HEAT TREAT	FINISH	DRAFT							

NAME BUSSES-ELEC.-CONTROL PANEL
LAWRENCE AUX. POWER UNIT

OPP. HAND

CONSOLIDATED AIRCRAFT CORP. SAN DIEGO, CALIF.

DWG. SIZE D — 28E5127

LET	ALTERATION	DATE	BY
A	ADDED PBY-5A N.A. 28E4014-6		
	NOMENCLATURE CHG.	9-19-41	[illegible]

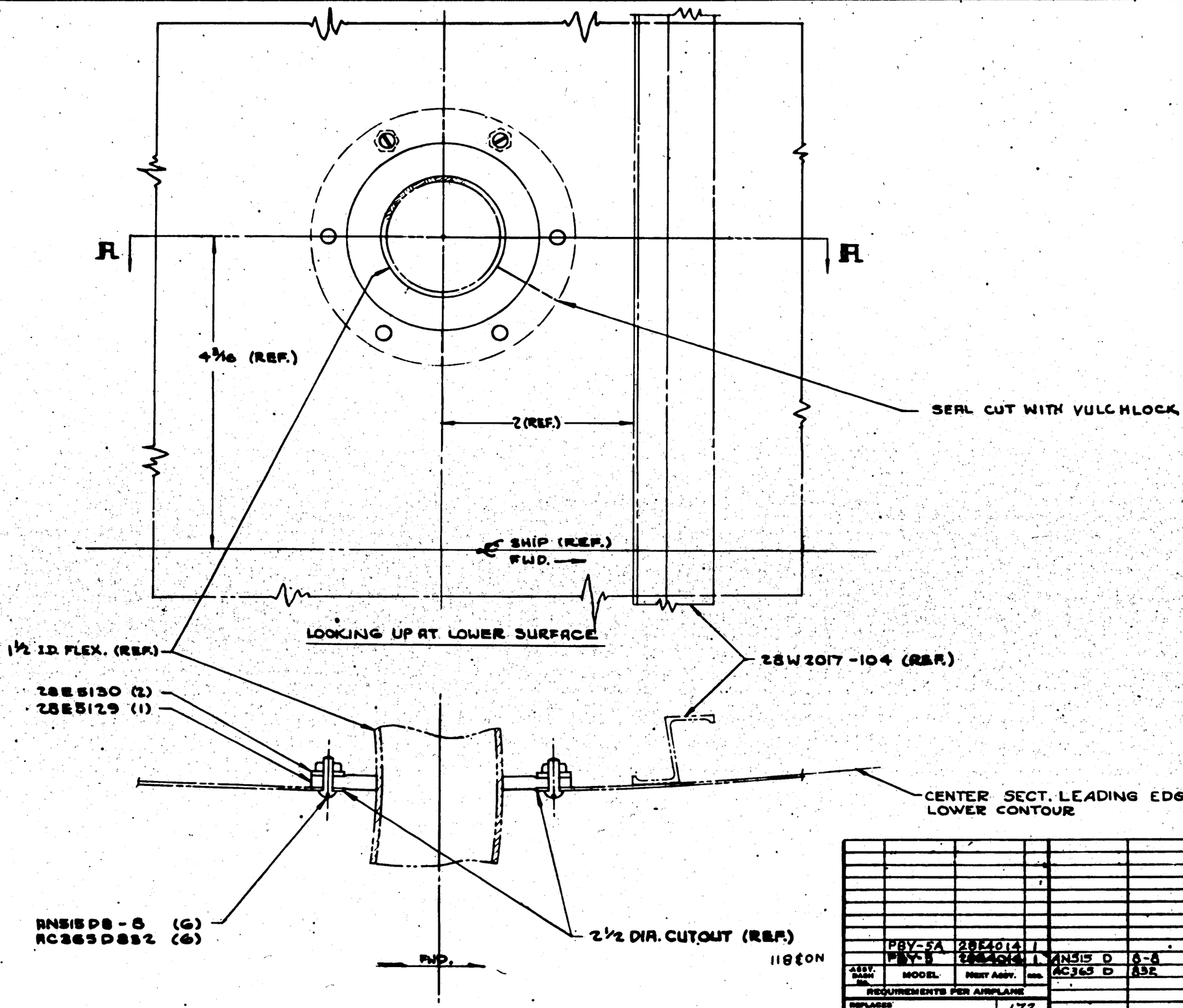

SECTION A-A

ASSY. DASH No.	MODEL	NEXT ASSY.	QTY.
	PBY-5A	28E4014	1
	PBY-5	28E4014	1

REQUIREMENTS PER AIRPLANE

REPLACES — Cale. Qty. .172

REPLACED BY — Asy. Qty.

Limit on Engineering Variance Dimensions ± 1/32

SCALE 12" = 1'-0"

STAMP PART NUMBER WHERE SHOWN

PART No.	STOCK	MATERIAL	SPEC.	LH REQ. -0	RH REQ. -2	LH REQ. -3	RH REQ. -4	LH REQ. -5	RH REQ. -6
AN515 D 8-8				6					
AC365 D 852				6					
28E5130				2					
28E5129				1					

PARTS LIST PER ASSY.

A.C. —
NAVY NONE — NONE
HEAT TREAT — FINISH

R.W. PUBLICATION 6-16-41 — DRAFT — CHECK — STRUCT. — MAT'L — ASSEMBLY — ENG.

NAME INSTALLATION - ELEC. - SPECIAL GROMMET

OPP. HAND NONE

CONSOLIDATED AIRCRAFT CORP. San Diego, Calif.

SIZE D — 28E5131

LET	ALTERATION	DATE	BY
A	CREATED -2 ASS'Y PER PBY-5 CONT.#91876	3-12-42	MOORE
B	ADDED VIEW FOR -2 ASS'Y	5-6-42	RAYMOND

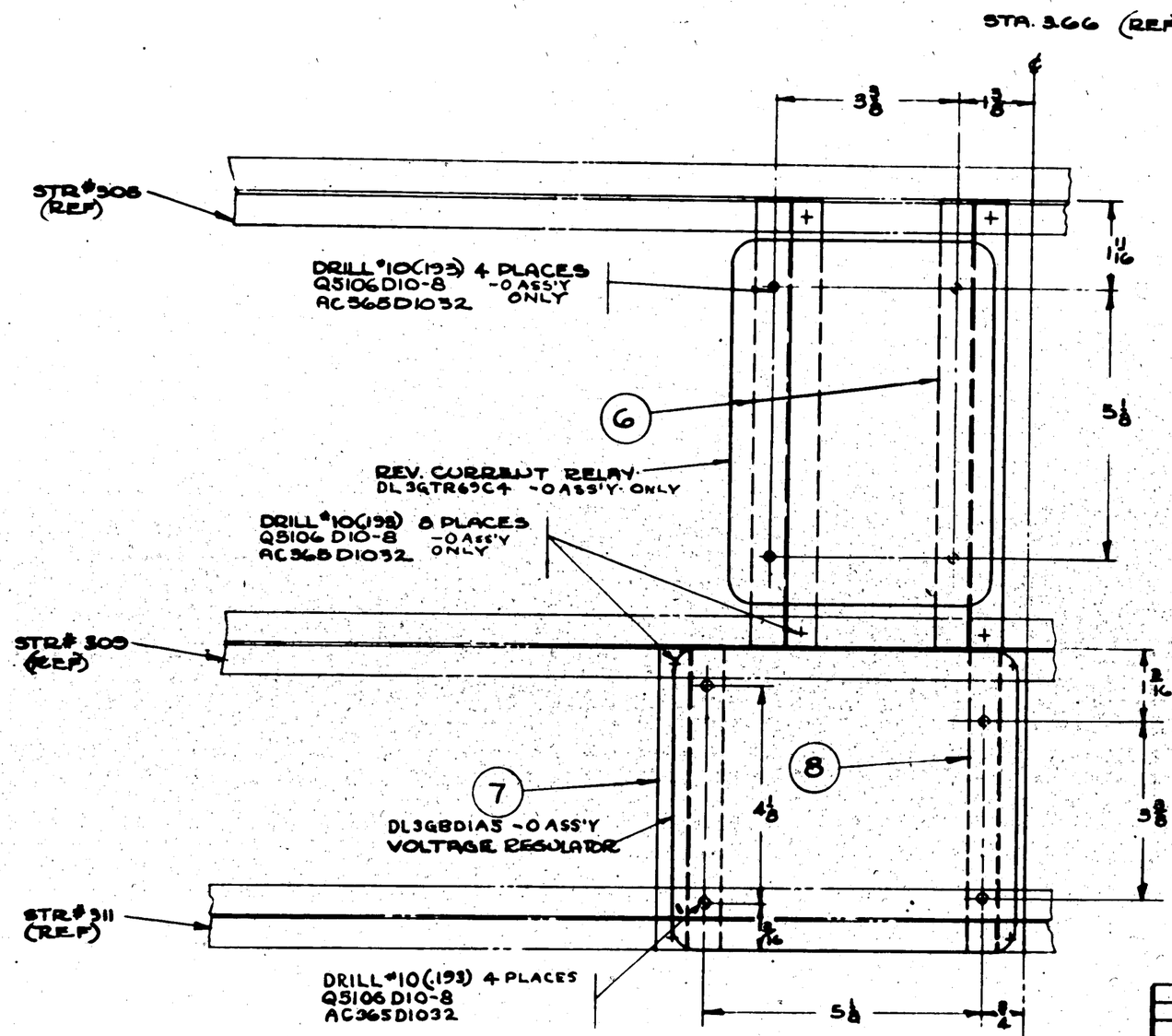

VIEW LOOKING UP
-0 ASSY ONLY
F'W'D

CONT #91876
CONTRACT #70496
DU. 240 & 248

CONTR CHG'X"
HAS BEEN INSTALLED
ON #1 SHIP

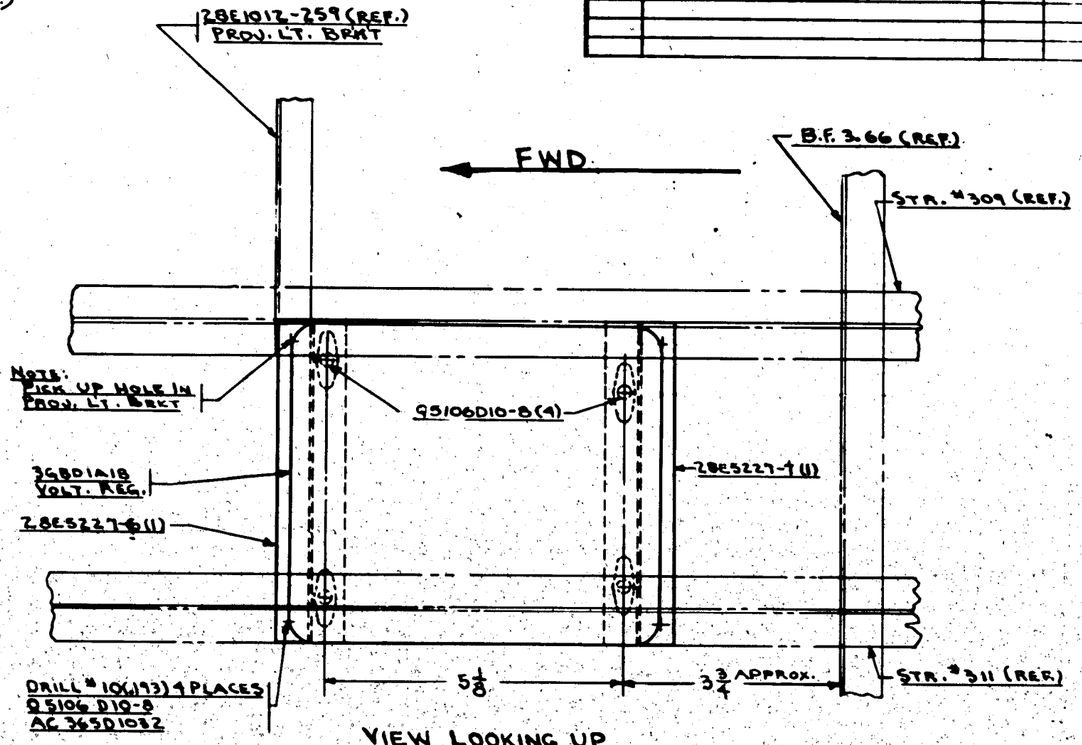

VIEW LOOKING UP
-2 ASSY ONLY

OUT'B'D

* GOV.T PUBLISHED

ASSY. DASH No.	MODEL	NEXT ASSY.	REQ.
-2	PBY-5	28E1012	1
-0	PBY-5	28E1012	1

REQUIREMENTS PER AIRPLANE

REPLACES 202 CALC. WT.

REPLACED BY ADV. WT.

SCALE 6" = 1'-0"

STAMP PART NUMBER WHERE SHOWN

PART No.	STOCK	MATERIAL	SPEC.	LH REQ. -0	RH REQ. -2	LH REQ. -3	RH REQ. -4	LH REQ. -5	RH REQ. -6
	REV. CURR RELAY G.E.Co.	DL3GTR69C4		1					
	VOLTAGE CONTROL G.E.Co.	DL3GBD1A5		1					
	VOLTAGE CONTROL G.E.Co.	3GBD1A18			1				
AC365D1032				10	4				
Q5106D10-8				10	8				
28E5227-7						1			
28E5227-6							1		
-8	K-14040X6 1/2			1					
-7	K-14040X6 1/2				1				
-6	K-14040X9	AL.AL. 24ST	46A9 T	2					

PARTS LIST PER ASSY.

AC		7-29-41	5-21-42		DMW				
NAVY									
HEAT TREAT	FINISH	DRAFT	CHECK	STRUCT	MAT	APPROV	ENG.		

NAME INST-ELEC-VOLTAGE CONT. & REVERSE CURRENT RELAY

OPP. HAND NONE

SIZE D

28E5134

CONSOLIDATED AIRCRAFT CORP. SAN DIEGO, CALIF.

RUSH RELEASED 3/12/42 A

TYPE A

LET	ALTERATION	DATE	BY
A	E.O. A32178 6 5/32 WAS 6 1/4 11/8 R2 WAS 1 1/4 R. 1 1/8 WAS 1 1/16, 1/2 A WAS 9/16 R. 5 1/4 WAS 5 1/16, 1 1/16 WAS 1 1/8 1 1/8 WAS 1 1/16, 1 1/32 WAS 1 1/32 9/16 WAS 5/8 (WT. CHG. NEG) 6-3-42		

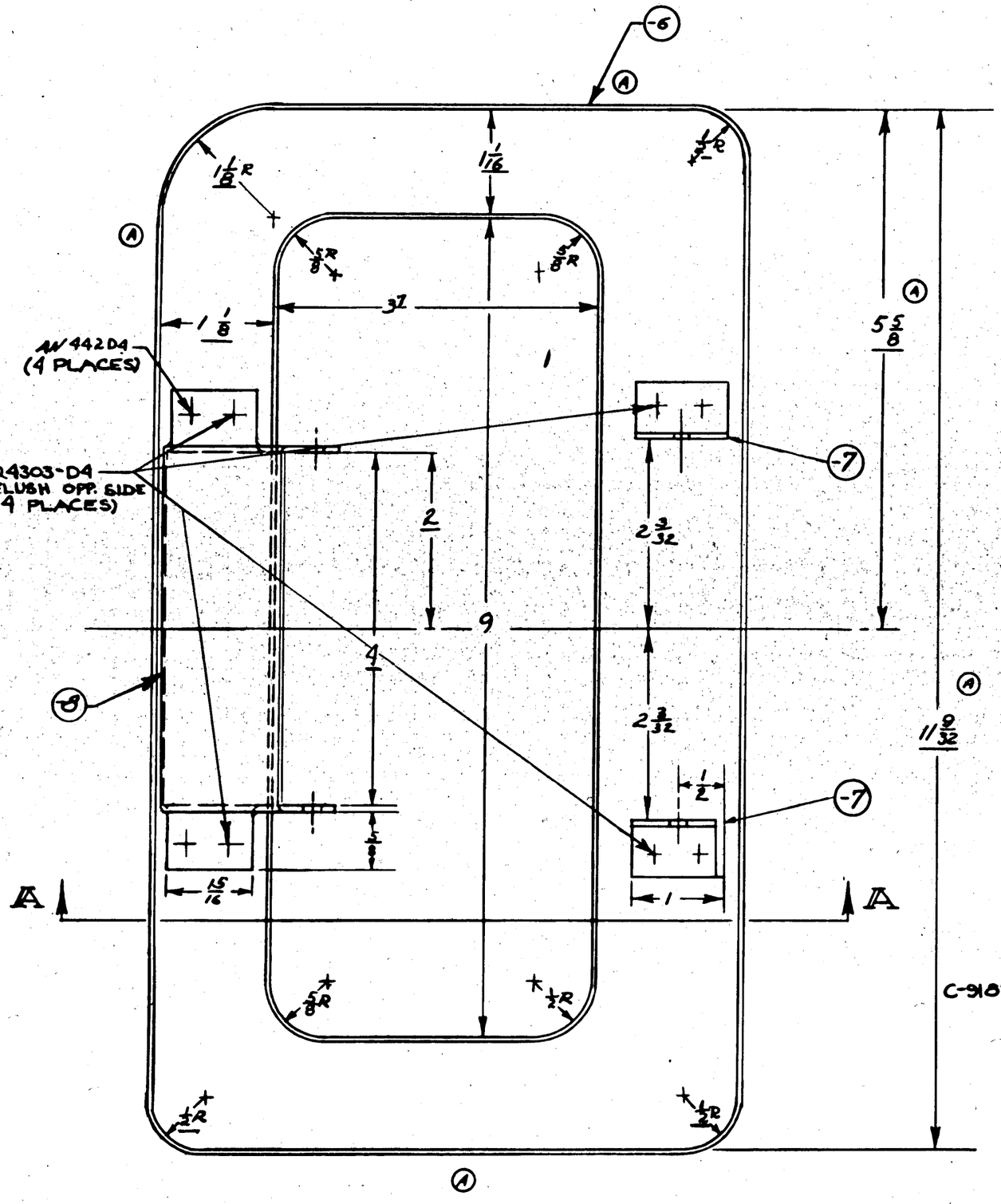

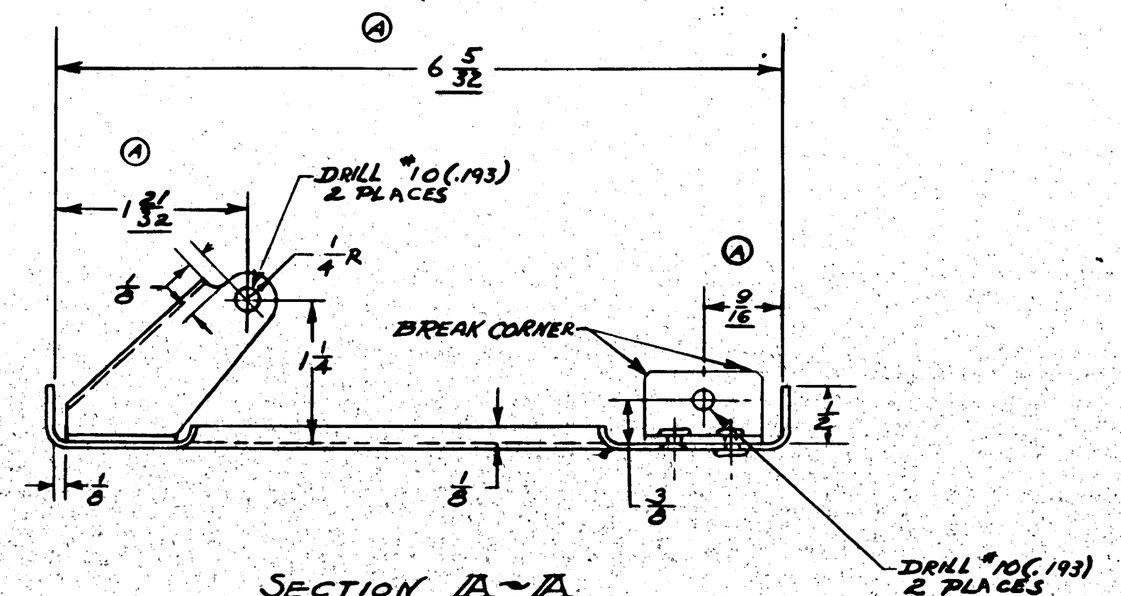

SECTION A-A

NOTE:
ALL BEND RADII 1/8
2-6 TO FIT FLUSH WITH INSIDE OF 28E5151 DUCT

ASSY. DASH NO.	MODEL	NEXT ASSY.	QTY
	DAYS	28E5150	1

REQUIREMENTS PER AIRPLANE

REPLACES — CALC. WT.

REPLACED BY — ACT. WT.

SCALE 12"=1'-0"

± 1/32 STAMP PART NUMBER WHERE SHOWN

PART NO	STOCK	MATERIAL	SPEC	LH REQ. -0	RH REQ. -2	LH REQ. -3	RH REQ. -4	LH REQ. -5	RH
Q4303-D4									
AN 442 D4									
-8	.064 x 3 1/2 x 8	ALC. 2450	47A8-A	1					
-7	.064 x 6 1/4 x 12 1/2	24ST-ALN.	46A8-T	2					
-6	.064 x 8 x 12 1/2	ALC. 2450	47A8-A	1					

PARTS LIST PER ASSY.

AC		MYMAS	KAGEL	GEORGE		D.L.C.	WELD
NAVY SR-53 (LH & B ONLY)	Z-P-2AP	120-42	DUNCAN		A.L.	2/18/42	2-17
HEAT TREAT	FINISH	DRAFT	CHECK	STRUCT	MAT	APPROV	ENG

NAME SUPPORT-ASSEM. AUX.P.P.-AIR INLET DUCT

OPP HAND

CONSOLIDATED AIRCRAFT CORP. San Diego, Calif.

DWG D SIZE

28E5152

R

LET	ALTERATION	DATE	BY
A	DIMS 1⅝ WAS 2⅛ & 2 2⅝ WAS 29⅝ & STOCK SIZE .064 X 28⅝ X 27 WAS .064 X 29⅛ X 27 (NEW WT. CHG.)	6-3-42	

Q E.O. A27089

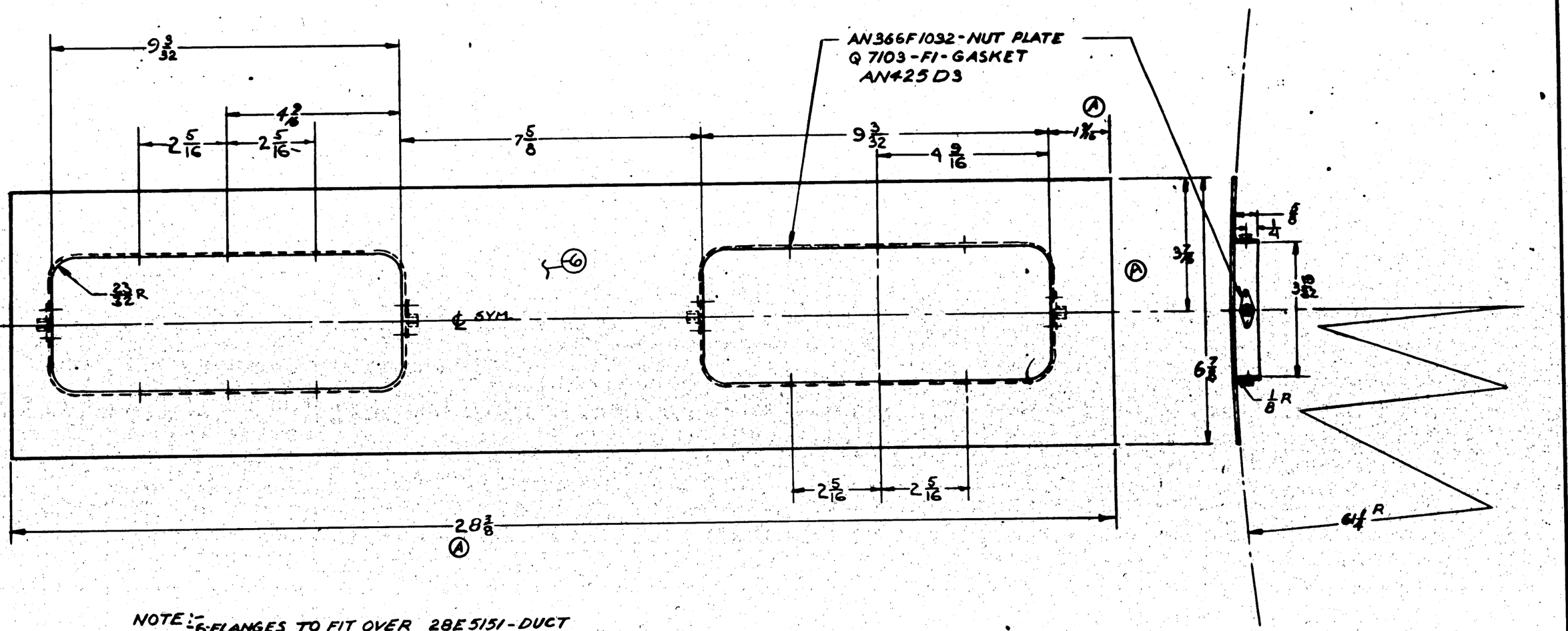

NOTE:- 6-FLANGES TO FIT OVER 28E5151-DUCT

THIS D'W'G HAS BEEN RUSH RELEASED 1/30/42

CONTRACT 51876

ASSY. DASH No.	MODEL	NEXT ASSY.	REQ.
	PBY-5	28E5042	1

REQUIREMENTS PER AIRPLANE

REPLACES — CALC. WT.

REPLACED BY — ACT. WT.

SCALE 6" = 1'0"

STAMP PART NUMBER WHERE SHOWN

PART No.	STOCK	MATERIAL	SPEC.	LH REQ. -0	RH REQ. -2	LH REQ. -3	RH REQ. -4	LH REQ.	RH REQ. -5
28E5155-6	.064 X 28⅝ X 27	AKCL-2450	47A9-A	1					
Q7103-F1								16	16
AN366-F1032									
AN425D3									

PARTS LIST PER ASSY.

AC / NAVY SR-53 — HEAT TREAT — Z-P-2AL — FINISH

NAME HULL OPENING PLATE
COOLING AIR DUCTS-AUX. P.P.

CONSOLIDATED AIRCRAFT CORP. San Diego, Calif.

OPP. HAND

SIZE D — 28E5155

R

LET	ALTERATION	DATE	BY

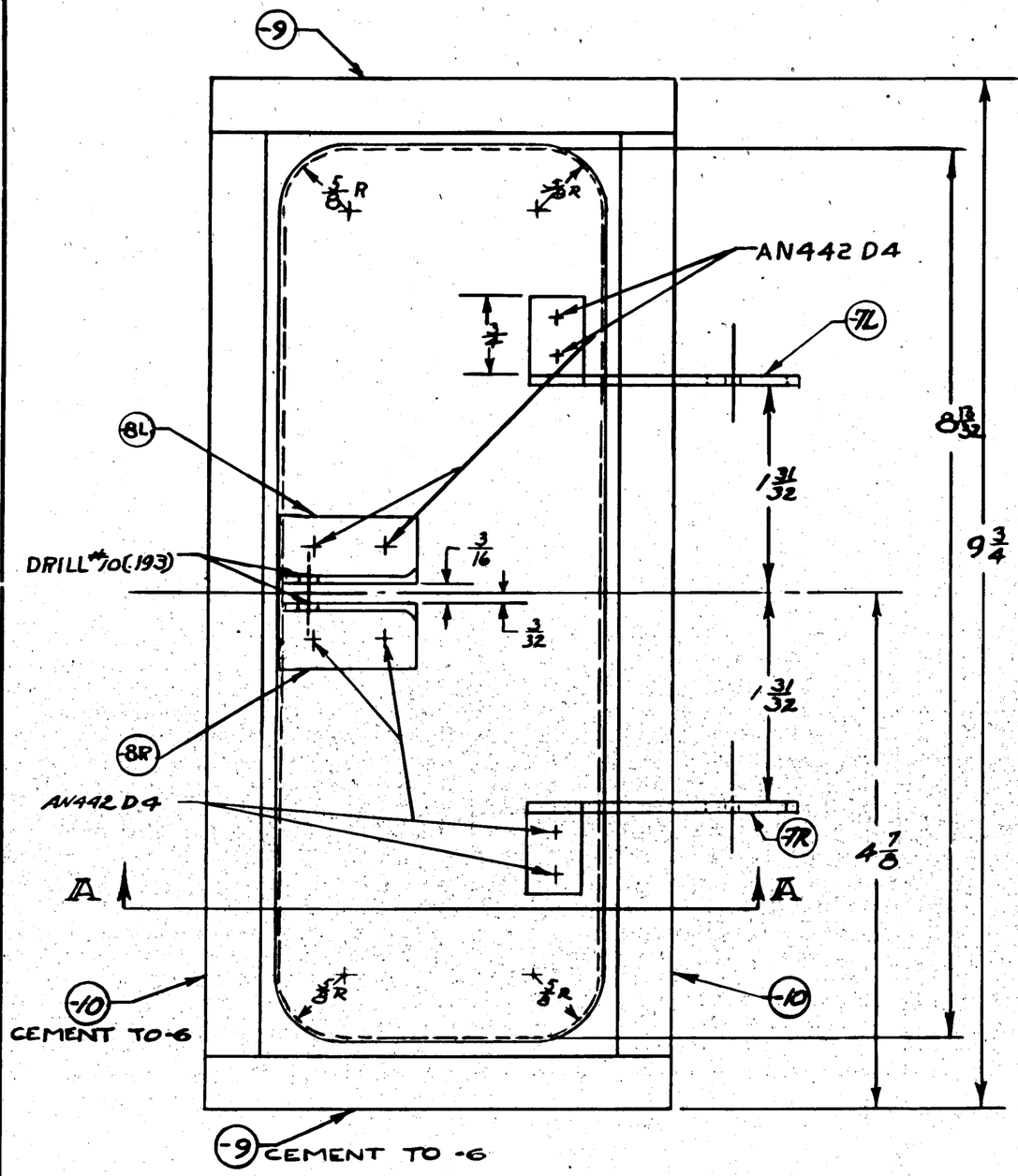

NOTE: ALL BEND RADII 1/8

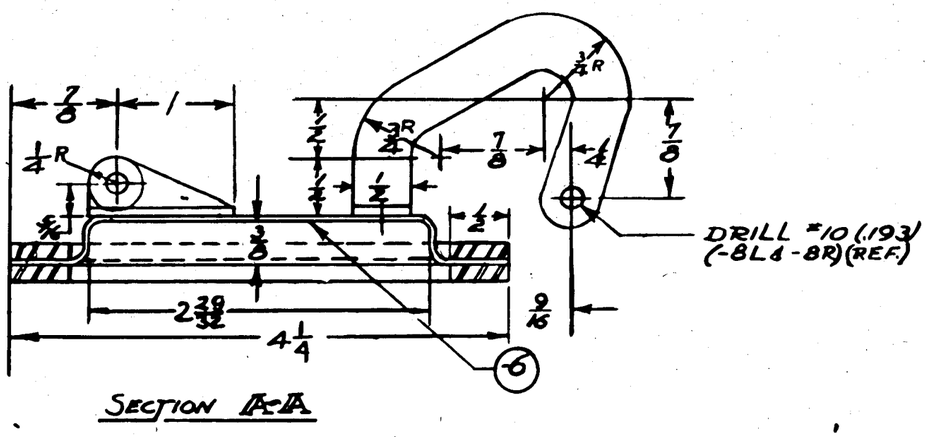

SECTION A-A

C-91676

AN442D4

PART NO	STOCK	MATERIAL	SPEC	REQ'D -0	-2	-3	-4	-5
PARTS LIST PER ASSY.								
-10	1/8 x 1/2 x 8 7/8	NEOPRENE 60 SHORE	NII					
-9	1/8 x 1/2 x 43/8	NEOPRENE 60 SHORE	NII					
-8R	RH362A x 1 3/8	24ST ALAL	46A9-T					
-8L	RH362A x 1 3/8	24ST ALAL	46A9-T					
-7R	.064 x 2 1/2 x 3	ALC 24ST	47AR-T					
-7L	.064 x 2 1/2 x 3	ALC 24ST	47AR-T					
-6	.040 x 4 7/8 x 6 3/8	ALC-2450	47A9-A					

ASSY. DASH NO.	MODEL	NEXT ASSY.	REQ.
	PBY-5	28E5150	1

REQUIREMENTS PER AIRPLANE

REPLACES — CALC WT.

REPLACED BY — ACT WT.

LIMIT ON DIMENSIONS UNLESS OTHERWISE DESIGNATED ± 1/32

SCALE 12" = 1'-0

STAMP PART NUMBER WHERE SHOWN

AC

NAVY SR-53 (C ONLY) — E-P-2AP

HEAT TREAT — FINISH — DRAFT

NAME DOOR - UPPER INLET DUCT - AUX. POWER PLANT

CONSOLIDATED AIRCRAFT CORP. SAN DIEGO, CALIF.

SIZE D — DWG 28E5157

R

EO 27593

LET	ALTERATION	DATE	BY
A	CHGD STOCK TO 1¼O.D.X.035X17%		
	WAS 1¼O.D.X.049X17½ (NEG WT. CHG) 4-15-42		WALTHER

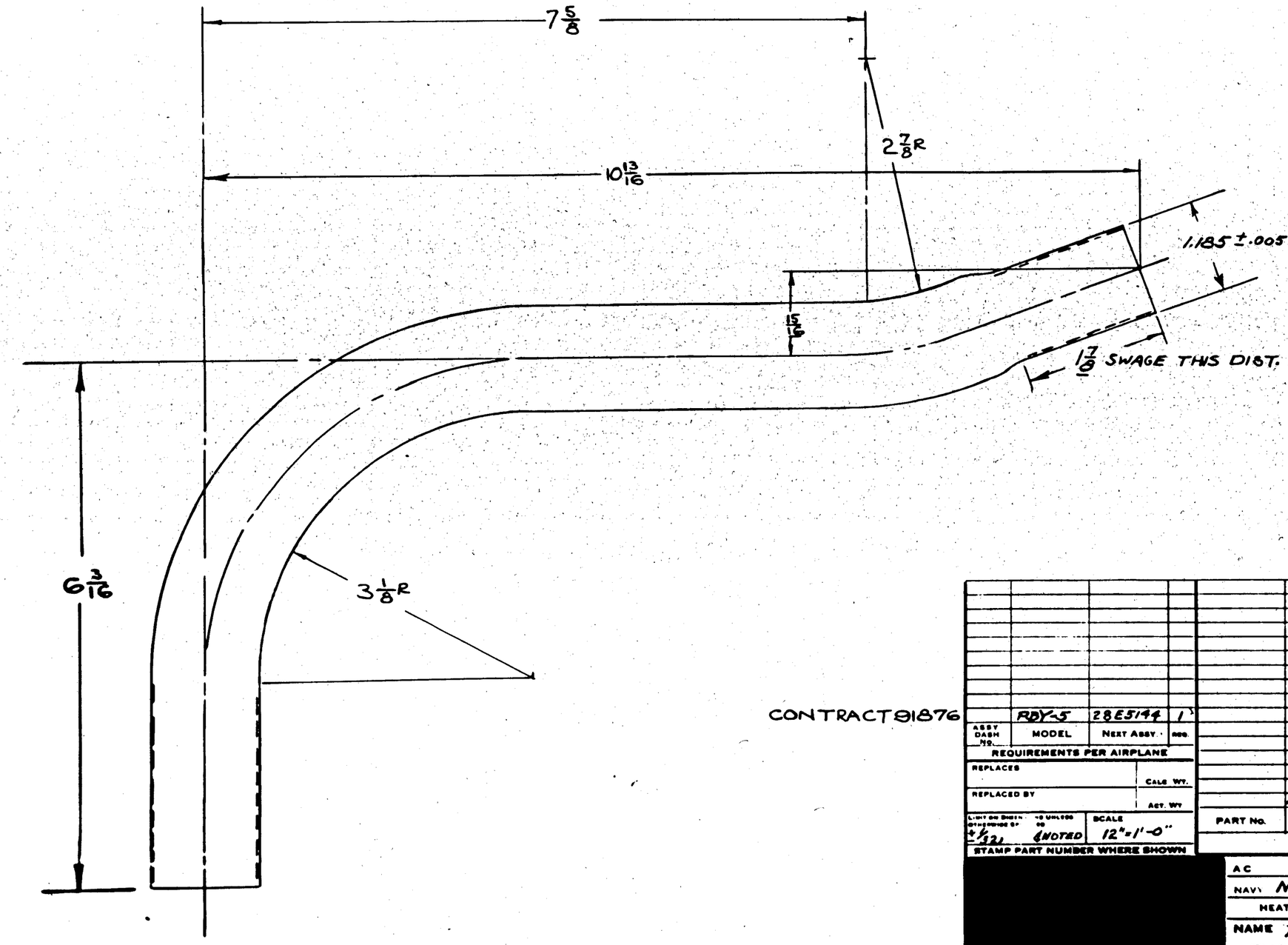

CONTRACT 91876

ASSY DASH NO.	MODEL	NEXT ASSY.	REQ.
	RDY-5	28E5144	1

REQUIREMENTS PER AIRPLANE

REPLACES — CALC WT.

REPLACED BY — ACT. WT.

LIMIT DIMENSIONS ±.010 UNLESS OTHERWISE SPECIFIED ±1/32 — UNNOTED — SCALE 12"=1'-0"

STAMP PART NUMBER WHERE SHOWN

PART NO.	STOCK	MATERIAL	SPEC.	LH REQ.	RH REQ.	LH REQ.	RH REQ.	LH REQ.	RH REQ.	LH REQ.	RH REQ.	LH REQ.	RH REQ.
	1¼O.D.x.035x17½	ST. STL. TUBE	4-4T27 PATH 1	-0		-2		-3		-4		-5	

PARTS LIST PER ASSY.

AC									
NAVY NONE	SAND BLAST & PASSIVATE	1-31-42							
HEAT TREAT	FINISH	DRAFT	CHECK	STRUCT	MAT	APPROV	ENG		

NAME TUBE – UPPER OUTLET DUCT – AUX. POWER PLANT

OPP. HAND

CONSOLIDATED AIRCRAFT CORP. SAN DIEGO, CALIF.

DWG. SIZE D — 28E5158

R

INCORP BUR. AIR CHANGE #53-MODEL PBY-5 a E.O.A40431

LET	ALTERATION	DATE	BY
A	REVERSED FLANGE-DIMS 3 15/16 WAS 4" REMOVED 1/16 LOCATING HOLE & LOCATING DIMS (W.T.C.NO NEG)	6-3-42	SEYMOUR

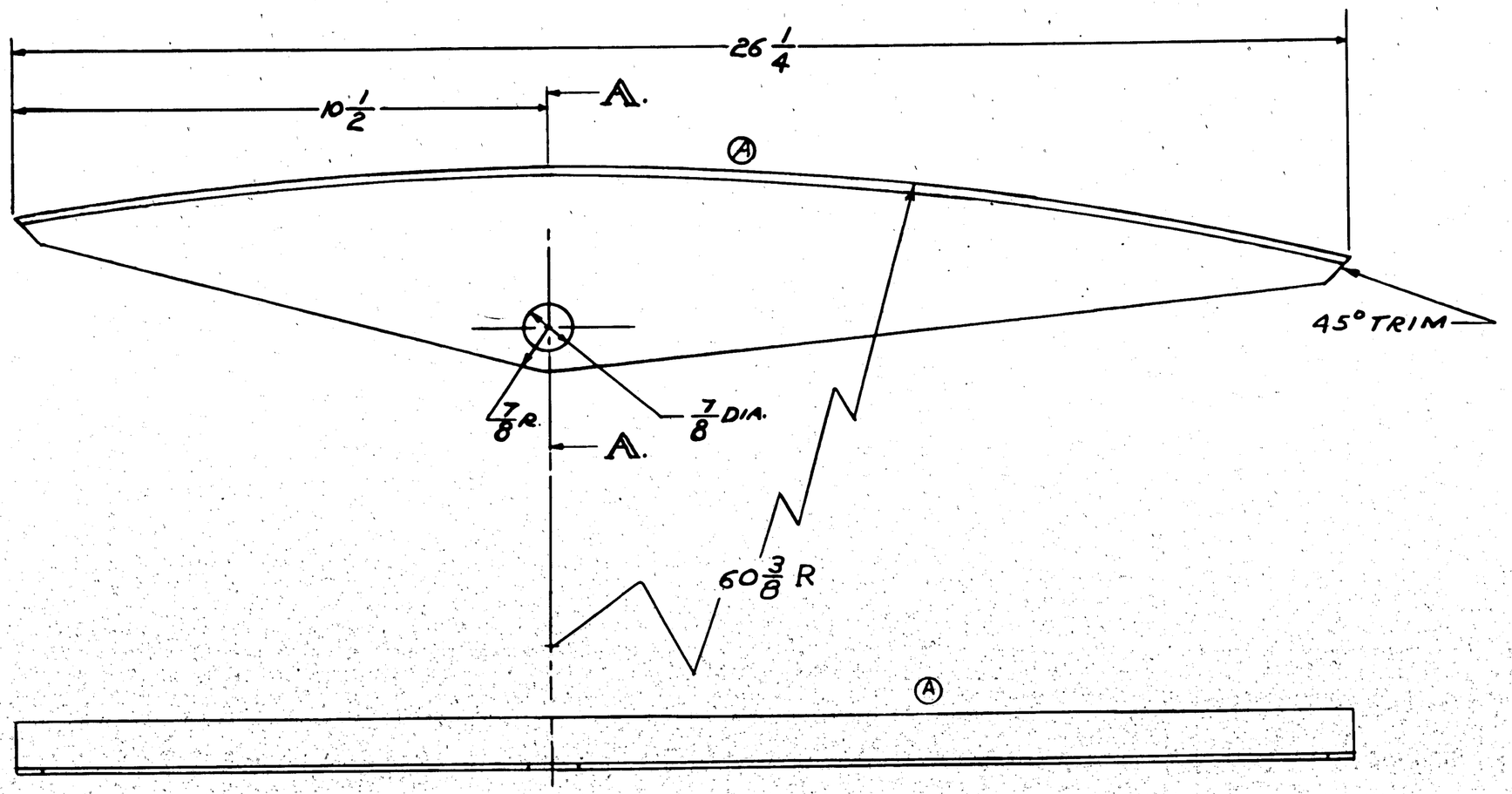

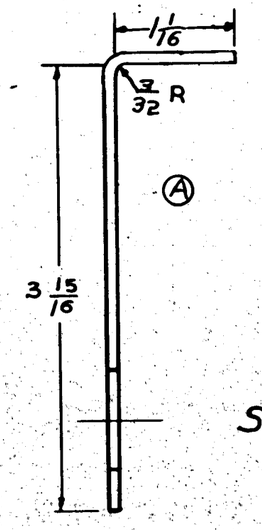

SECTION A-A
FULL SIZE.

AND AIRPLANES CONTRACT #9187
BU. #2406-2455
ON C. 70496.
(SHIPS 118 TO 167)

ASSY DASH NO.	MODEL	NEXT ASSY.	REQ
	PBY-5	28E5162	1

REQUIREMENTS PER AIRPLANE

REPLACES

REPLACED BY

CALC WT.

ACT WT

LIGHT OR DISCREPANCIES UNLESS OTHERWISE SPECIFIED + − 1/32

SCALE 6" = 1'-0"

STAMP PART NUMBER WHERE SHOWN

PART NO	STOCK	MATERIAL	SPEC.	LH REQ. -0	RH REQ. -0	LH REQ. -2	RH REQ. -2	LH REQ. -3	RH REQ. -3	LH REQ. -4	RH REQ. -4	LH REQ. -5	RH REQ. -5
	.09 X 5 3/4 X 26 1/2	2450 ALCLAD	24AB-A										

PARTS LIST PER ASSY.

AC		AUSTIN	KAPEL						
NAVY SR-53	Z-P-ZAP	2-3-42							
HEAT TREAT	FINISH	DRAFT	CHECK	STRUCT	MAT	APPROV	ENG		

NAME PAD EYE - AUX. POWER PLANT HOIST.

OPP. HAND

CONSOLIDATED AIRCRAFT CORP. SAN DIEGO, CALIF.

DWG. SIZE D

28E5161

R

LET	ALTERATION	DATE	BY
A	CORRECTED PICTURE & INSTALL. OF 28E5161. REMOVED NOTE: "3/4 APPROX." & ADDED NOTE: "#10(.193)--AS POSSIBLE. REPLACED AN442-D4 & AN442D5 WITH AN3-4A(7) & AC372-1032(7) NEG. WT. CHG.	6/3/42	SEEDMA
B	CREATED -2 ASSY-NO W.T. CHG.	2-22-42	SHEPHER

E.O. #A64176 OC CHG. #89 (4 OF A)

INCORP BUR. AIR. CHANGE #53 - MODEL PBY-5

STR. #505 (REF.)

STR. #507 (REF.)

STR. #509 (REF.)

STR. #515 (REF.)

STR. #517 (REF.)

STR. #519 (REF.)

℄ OF SHIP

28B5042-7 (REF.) -0 ASS'Y
28B5081-7 (REF) -2 ASS'Y

28E5155 (REF.) -0 ASS'Y.
28E5258 (REF) -2 ASS'Y

28B5042-8 (REF.) -0 ASS'Y
28B5081-8 (REF) -2 ASS'Y

28E5161

28B5475-7R (REF)

VIEW LOOKING FORWARD.

℄ # STA 4.75

28E5258 (REF) -2 ASS'Y.

28E5155 (REF) -0 ASS'Y.

28B5042-7 (REF.)

28B1152-14 (REF)

1 1/8 -0 ASS'Y.

5/8 -2 ASS'Y.

#10 (.193) 7 HOLES AN3-4A (7) AC372-1032 (7) INSTALL BOLTS AS CLOSE TO RADIUS AS POSSIBLE.

28E5161 (REF) -2 ASS'Y.

28P1019 TACKLE (REF.)

28B5475-7R (REF)

28E5161 (REF) -0 ASS'Y

F'W'D

SECTION A-A
FULL SIZE

C.A.C. CHG. #89 (4 OF A)
- C# 91876 #91 & ON
C# 70496 #118 THRU 167
C# 91876 #1 TO 90

ASSY. DASH NO.	MODEL	NEXT ASSY.	REQ.
-2	PBY-5	28B6000	1
-0	PBY-5	28B1000	1
-0	PBY-5	28B6000	1

REQUIREMENTS PER AIRPLANE

REPLACES — CALC WT.

REPLACED BY — ACT. WT.

SCALE 6" = 1'-0"

+ - 1/32

STAMP PART NUMBER WHERE SHOWN

PART NO.	STOCK	MATERIAL	SPEC.	LH REQ.	RH REQ.	LH REQ.	RH REQ.	LH REQ.	RH REQ.	LH REQ.	RH REQ.	LH REQ.	RH REQ.
AC372-1032 AN3-4A				2	2	4							
28E5161				1	1								

PARTS LIST PER ASSY.

AC		AUSTIN KAREL				
NAVY NONE	P	2-3-42				2-6"
HEAT TREAT	FINISH	DRAFT	CHECK	STRUCT	MAT	APPROV	ENG

NAME INSTALLATION PAD EYE - AUX. POWER PLANT HOIST.

OPP. HAND

CONSOLIDATED AIRCRAFT CORP. SAN DIEGO, CALIF.

DWG. D SIZE

28E5162

R

LET	ALTERATION	DATE	BY
A	ADDED NAF 213019-3 (1) NAF 213028-3 (1), AN3064-8(1), AN3056-8(1); ADDED PAV-5, CONT #91876 SHIPS 1-90.	3-28-42	AO
B	Q6202-4 WAS Q6202F-4 AN3064-8 & AN3066-8 WAS AN3054-8 & AN3056-8.	4-15-42	[illegible]
C	NAF213019-2 WAS NAF213019-3 NAF213028-2 WAS NAF213028-3 (NEG. WT. CHG)	7-16-42	STONE
D	AN3064-8(1), & AN3066-8(1) WAS NAF213019-2(1) & NAF213028-2(1). NAF213019-2(1) & NAF213028-2(1) WAS AN3064-8(1) & AN3066-8(1). NO WT CHG.	1-14-43	WINTER

FLR #3007

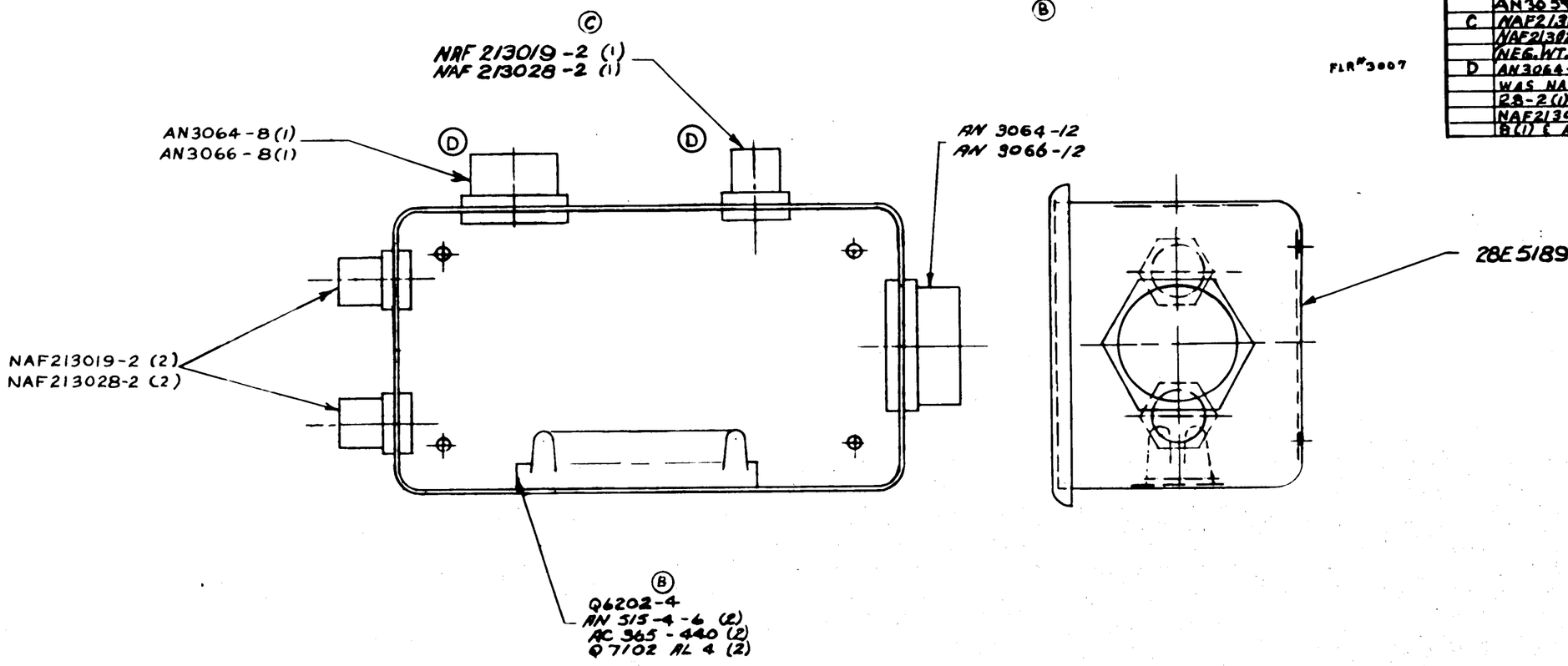

FRONT VIEW
COVER REMOVED

SIDE VIEW

CONT. # 91876 1-90
CONT. #77713 ALL
CONT. #88476 1-52

S.O. 949-54
S.O. 953-24
SERVICE ACTION

S.O. 955-5-1C
10 PARTS MADE

ASSY DASH NO.	MODEL	NEXT ASSY	QUAN
	PAV-5	28E5190	1
	PBY-5A	28E5190	1

REQUIREMENTS PER AIRPLANE

REPLACES — CALC WT.

REPLACED BY — ACT. WT.

UNLESS OTHERWISE SPECIFIED DECIMALS ± 1/32 — SCALE 12"-1'0"

STAMP PART NUMBER WHERE SHOWN

PART NO	STOCK	MATERIAL	SPEC.	LH REQ. -0	RH REQ. -2	LH REQ. -3	RH REQ. -4	LH REQ. -5	RH
AN3066-8					1				
AN3064-8				1					
NAF213019-2						3			
AN3066-12							1		
NAF213028-2						3			
AN3064-12								1	
AC 365-440								2	
AN515-4-6								2	
Q7102 AL4								2	
Q6202-4				1				1	
28E5189					1				

PARTS LIST PER ASSY.

A.C.		2-19-42
NAVY NONE	NONE	RENNING
HEAT TREAT	FINISH	DRAFT

CHECK	STRUCT	MAT	APPROV	ENG

NAME BOX ASSY-ELEC.-WING LIGHT JUNCTION

OPP HAND NONE

CONSOLIDATED AIRCRAFT CORP. SAN DIEGO, CALIF.

DWG D SIZE

28E5188

R

LET	ALTERATION	DATE	BY
A	REVACATED HOLES: #34 (.111) CHANGE TO #10 (.193) ADDED BOX-S CONT. #81876		
B	1 7/32 DIA. HOLE WAS 1 3/16 DIA. ENTER HOLE WAS 1 7/32 DIA. & ENTER HOLE WAS 1 3/16 DIA. ADDED NOTE (3)	E.O. R-6807	
C	ADDED DIM. 1 1/4		

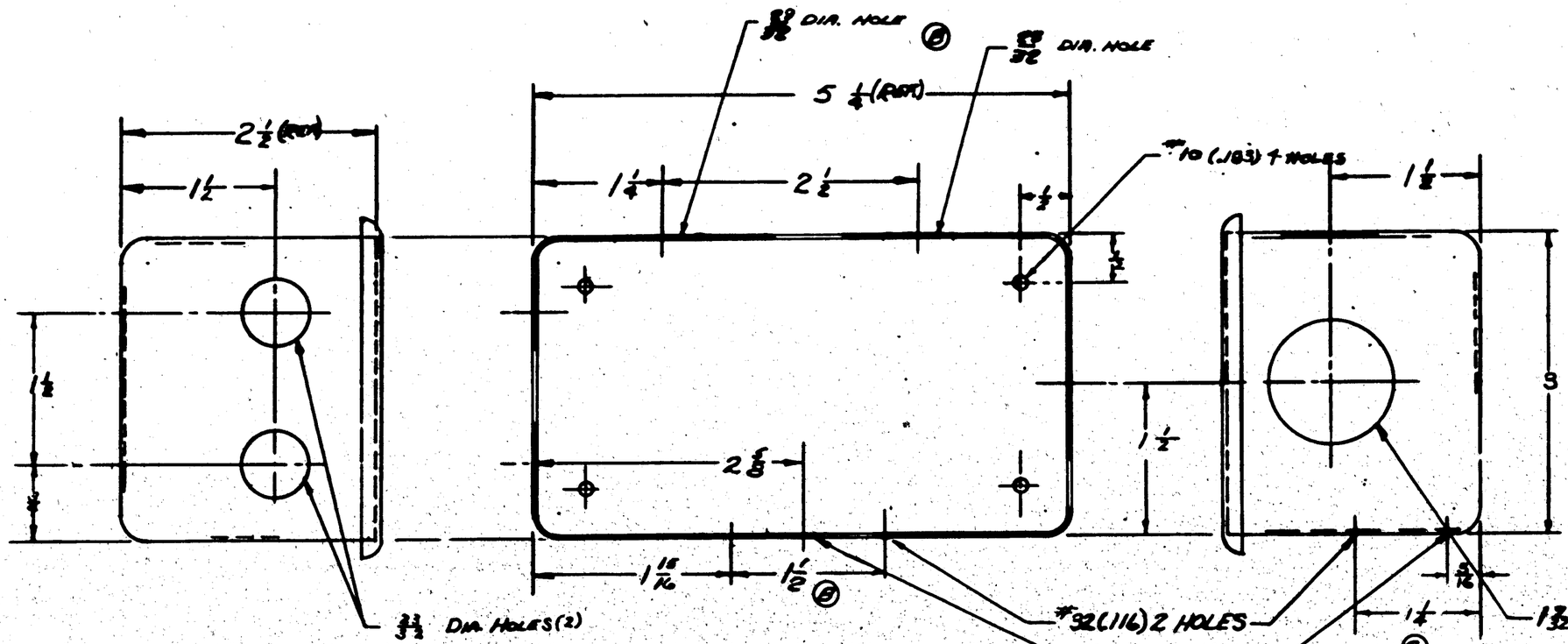

NOTES —

(1) BOX & COVER MAY BE PURCHASED FROM MONARCH TOOL & INSTR. CO. 1034 R-216 BOX MT-CSD 1034 COVER OR FROM POULSEN & NAMDON CO. 1193-216 N BOX 1193-353 D COVER.

(2) BOX TO BE FURNISHED WITH TIGHT FITTING COVER. NON-LOSEABLE STEEL SCREWS & DURAL WASHERS.

(3) REMOVE FINISH 3/32 RADIALLY AROUND HOLES

FINISH- P-INSIDE
PEP-OUTSIDE
P= P27 PRIMER.
GP= GREEN PRIMER.

CONT. #81876 (1-90)
CONT. #77713 (ALL)
CONT. #80476 (1-52)

S.O. 948-54
S.O. 953-24
SERVICE ACTION

S.O. 955-5-IC
10 PARTS MADE

ASSY. DWG. NO.	MODEL	NEXT ASSY.	QTY.
	BOX-S	28E5188	
	BOX-SA	28E5188	

REQUIREMENTS PER AIRPLANE

REPLACED — .245" CAST. QTY.
REPLACED BY — ACT. QTY.
1/32 — SCALE 12" = 1'0"
STAMP PART NUMBER WHERE SHOWN

PART NO.	STOCK	MATERIAL	SPEC.	LH REQ. -0	RH REQ. -2	LH REQ. -3	RH REQ. -4	LH REQ. -5	RH REQ.
-7	COVER	C.A.C. DWG. NO. AS							
-4	BOX								

PARTS LIST PER ASSY.

AC
NAVY NONE
HEAT TREAT
NOTED
FINISH
DRAFT
CHECK
STRUCT
MAT
APPROV
DNG

2-10-42 CHANGED TO 2-SS-A COVER & BOX
CHANGED V.W.T. PACHL. JER. 2-6-42 RECHARGE

NAME BOX-ELEC.-WING LIGHT JUNCTION
OPP. HAND NONE
SIZE D
28E5189

CONSOLIDATED AIRCRAFT CORP. San Diego, Calif.

R

LET	ALTERATION	DATE	BY
A	CHANGED DEPTH OF BOX TO 3¼; RELOCATED HOLES	2-4-42	WTF.
B	ADDED NOTE "FINISH WITH ACID - - - PRINT. ADMT. CHG.	2-27-42	[illegible]
C	ADDED 25/32 HOLE. MT. CHG. NEG. E.O.A53762	3-20-42	CAMPBELL

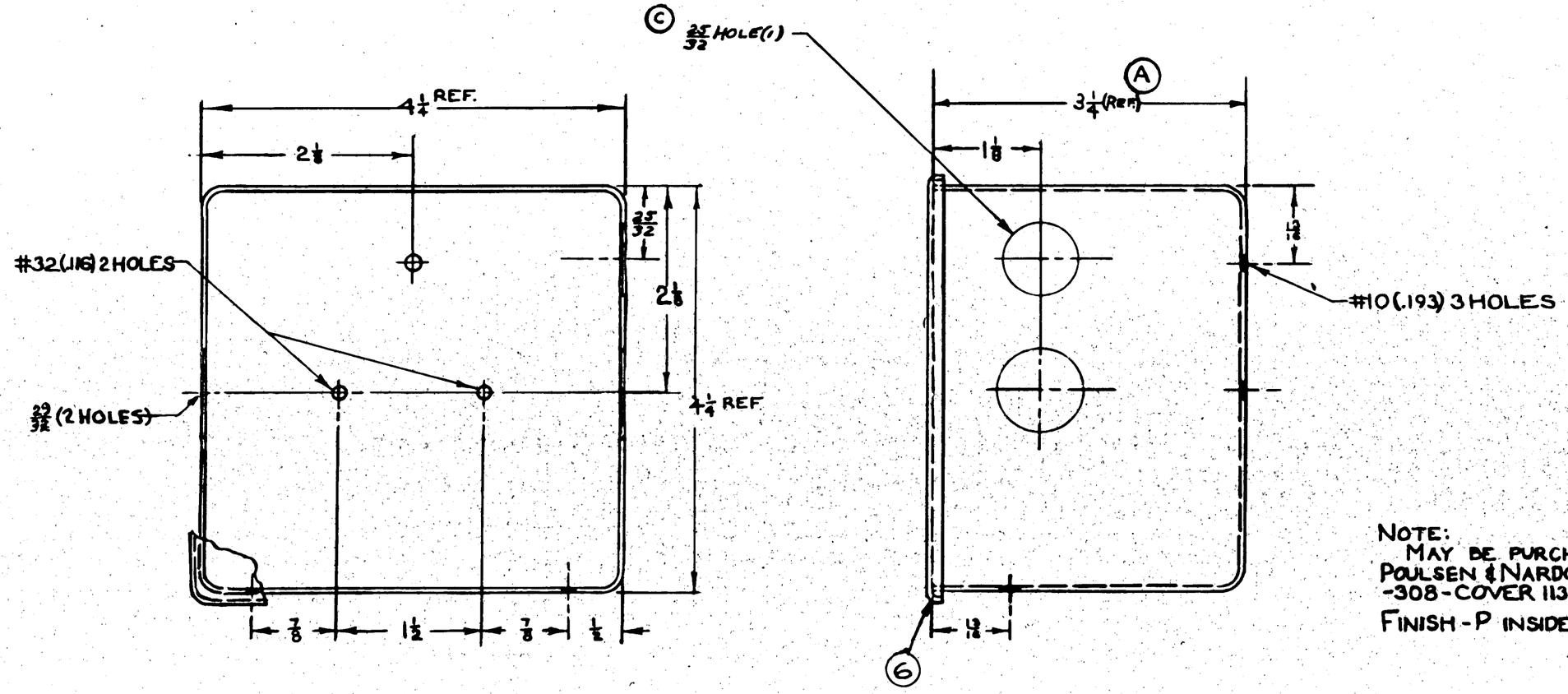

Ⓑ NOTE.
FINISH WITH ACID RESISTING BLACK PAINT

NOTE:
MAY BE PURCHASED FROM
POULSEN & NARDON – BOX 1135
-308 - COVER 1135-35D
FINISH - P INSIDE - PAP OUTSIDE

FINISH CODE	
Z	ANODIC TREATMENT
P	P-27 PRIMER
AP	ALUMINIZED PRIMER
C	CADMIUM PLATE

CONTRACT #70496
" 77713
" 88476
" 91876

RUSH RELEASED
"A" CHG 3-12-42
RUSH-RELEASED
3-16-42

NOTE:
1. CONTRACTOR INSTALLED ON ALL AIRPLANES OF CONTRACT #88476 & 91876
2. ON CONTRACT #70496 (33 AIRPLANES) & 77713, PARTS ARE TO BE FURNISHED TO NAVY FOR SERVICE INSTL'N.

ASSY. DASH NO.	MODEL	NEXT ASSY.	REQ'D
-0	PBY-5A	28E5193	1
-0	PBY-5	28E5193	1

REQUIREMENTS PER AIRPLANE

REPLACES — .36 CALC. WT.
REPLACED BY — ACT. WT.
UNLESS OTHERWISE SPECIFIED ± 1/32 — SCALE 12"=1'0"
STAMP PART NUMBER WHERE SHOWN

PART NO.	STOCK	MATERIAL	SPEC.	LH REQ.	RH REQ.	LH REQ.	RH REQ.	LH REQ.	RH REQ.	LH REQ.	RH REQ.	LH REQ.	RH REQ.
PARTS LIST PER ASSY.				-0		-2		-3		-4		-5	
-7				1									
-b	C.A.C. BOX #26-308N			1									

AC / NAVY / HEAT TREAT	FINISH	DRAFT	CHECK	STRUCT	MAT	APPROV.	ENG
	NOTED	2-27-42	2-28-42				9/16

NAME BOX-ELEC.-RADAR REC'R TO CONTROL PANEL SPLICE
OPP HAND NONE
CONSOLIDATED AIRCRAFT CORP. SAN DIEGO, CALIF.
DWG D SIZE
28E5192

R

LET	ALTERATION	DATE	BY
A	CHANGED DEPTH OF BOX AND LOCATION OF HOLES TO AGREE WITH 28E5192. ALSO MOVED Q6202-4 AND (1) BOX COUPLING ASS'Y TO MATCH NEW HOLES IN BOX. CHANGED AN505-4-7 TO AN515-4-7 & ADD AN960AL4 TO FACE OF DRAWING (1)	3-4-42	WHR
E.O.A53775 B	ADDED AN3064-6(1) & AN3066-6(1)		
	NEG. INT. CHG.	8-20-42	FOWK

(B)
AN3064-6(1)
AN3066-6(1)

AN515-4-7(2)
AN340-4(2)
AN960AL4 (A)

AN3053-8(2)
AN3054-8(2)
AN3084-8(2)
AN3066-8(2)

Q6202-4

28E5192 BOX & COVER

VIEW WITH COVER REMOVED

CONTRACT #70496
" 77713
" 88476
" 91876

RUSH RELEASED
3-12-42
"A" CHG. Rush Release
3-16-42

NOTE:
1. CONTRACTOR INSTALLED ON ALL AIRPLANES OF CONTRACT #88476 & 91876.
2. ON CONTRACT #70496 (33 AIRPLANES) & 77713 PARTS ARE TO BE FURNISHED TO NAVY FOR SERVICE INST.

ASSY. DASH No.	MODEL	NEXT ASSY.	REQ'D
-0	PBY-5A	28E5194	1
-0	PBY-5	28E5194	1

REQUIREMENTS PER AIRPLANE

REPLACES — CALC. WT.
REPLACED BY — ASS'Y. WT.

SCALE 12"=1'0"

STAMP PART NUMBER WHERE SHOWN

PART No.	STOCK	MATERIAL	SPEC.	LH REQ. -0	RH REQ. -0	LH REQ. -2	RH REQ. -2	LH REQ. -3	RH REQ. -3	LH REQ. -4	RH REQ. -4	LH REQ. -5	RH REQ. -5
AN3053-8				2									
AN3054-8				2									
AN3064-8				2									
AN3066-8				2									
AN3066-6					1								
AN3064-6					1								
AN515-4-7				2									
AN340-4				2									
AN960AL4				2									
Q6202-4				1									
28E5192				1									

PARTS LIST PER ASSY.

A C
NAVY
HEAT TREAT — FINISH

DRAFT	CHECK	STRUCT	MAT	APPROV	ENG.
2-27-42					3/16

NAME BOX ASS'Y-ELEC.-RADAR REC'R TO CONTROL PANEL SPLICE

OPP. HAND NONE

CONSOLIDATED AIRCRAFT CORP. SAN DIEGO, CALIF.

SIZE D

28E5193

LET	ALTERATION	DATE	BY
A	ADDED HARNESS, 33E1906 AND REVISED WT. ADDED NOTE REFERRING TO WIRE HARN. DIAGRAM CREATED -2 ASS'Y HAVING NEXT ASSY 33F228, (1) EA. REQ. FOR XB-32 # YB32		
B	REMOVED REQ'D FOR 42 DEPOT ASSIGNED -A TO BOX -7 TO COVER TO BE MADE FROM 42D5031 EQA*A52837	9-30-42	Martin
C	ADDED REQ'R T AIRPLANE FOR PBY 1,-2,-3,-4 & XPBY-1 REMOVED CONTR.# 91876 & #11713 & ON FOR PBY-5A, 5A (NO WT CHG	8-31-42	SLIGH
D	EQA87201 23/32 DIA. HOLE WAS 25/32 DIA. WEIGHT CHG	10-4-41	[illegible]
E	MCR-274 FOR -2 ASS'Y, -8 BOX REPLACES -6 BOX, AND -9 COVER REPLACES -7 COVER -8 BOX & -9 COVER IDENTICAL TO -6 BOX & -7 COVER EXCEPT -8 BOX & -9 COVER ARE MADE FROM NAF 1186 WHILE -6 BOX & -7 COVER ARE MADE FROM 42D5031	6-15-43	COONEY
F	ADDED OR EQUIV. TO BOX AFTER MAKE FROM NAF 1186 ALSO ADDED NOTE "TYPE L.S-15 ETC. NO WT CHG.	4-27-43	MOORE

NOTE:
NAF1186 MAY BE PURCHASED TO
(E) SPEC. FROM—
STANDARD AIRCRAFT
DAYTON, OHIO
OR FROM—
DELTA ELECTRIC
MARION, OHIO
TYPE L.S.-15 FROM
(F) BENDIX AVIATION, LTD.
NORTH HOLLYWOOD, CALIF.

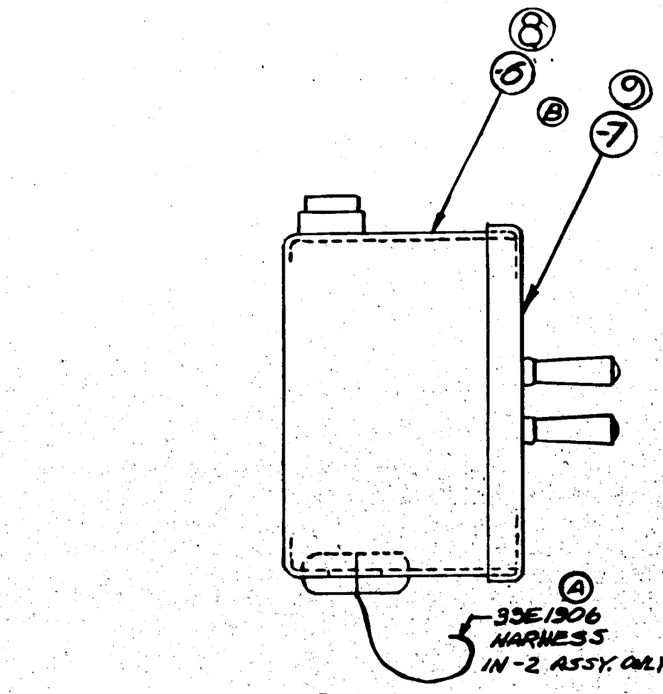

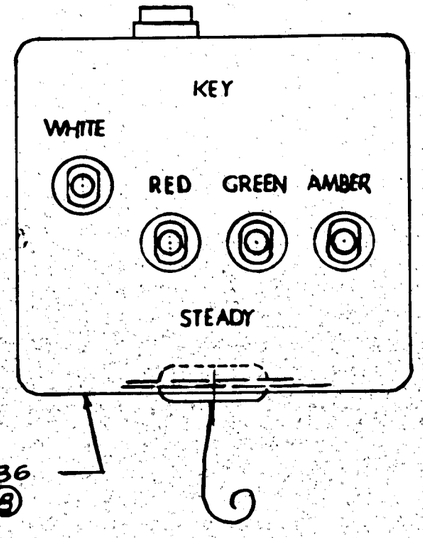

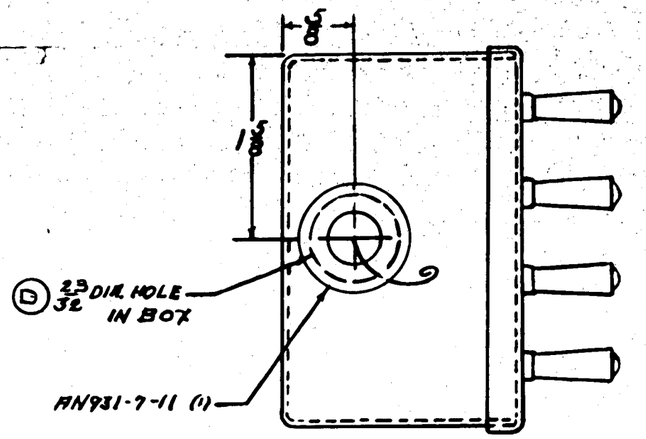

FOR ATTACHING ELEC. WIRE HARNESS SEE WIRING DIAGRAM 33E001 SHEET 1, (REF)

(A) NOTE
WT. AN 931-7-11 = #.0064
WT. 33E1906 = #.176

ASSY. DASH No.	MODEL	NEXT ASSY.	REQ'D
-0	XPBY-1	28E1055	1
-0	PBY-4	28E2061	1
-0	PBY-3	28E2061	1
-0	PBY-2	28E2061	1
-0	PBY-1	28E1055	1
-2	YB32	33E228	1
-2	XB32	33E228	1
-0	PBY-5A	28E2061	1
-0	PBY-5	28E2061	1
-0	PBY-5B	28E6139	1

MCR 274 (-0 assemblies) — (A) (-2 assemblies) — MCR 274 (-0 assemblies)

REQUIREMENTS PER AIRPLANE
REPLACES — SEE NOTE — CALC. WT.
REPLACED BY — ASST. WT.
LIMIT OF DIMENSIONS UNLESS OTHERWISE SPECIFIED ± 1/32
SCALE 12" = 1'-0"
STAMP PART NUMBER WHERE SHOWN

PART NO.	STOCK	MATERIAL	SPEC.	LH REQ. -0	RH REQ. -0	LH REQ. -2	RH REQ. -3	LH REQ. -4	RH REQ. -5
-9 COVER	MAKE FROM NAF 1186 OR EQUIV.			1					
-8 BOX					1				
33E1906						1			
AN931-9-11				1		1			
-7 COVER	MAKE FROM 42D5031						1		
-6 BOX								1	

PARTS LIST PER ASSY.

A.C.		BEAD					
NAVY NONE	NONE	3-17-42	DRAFT	CHECK	STRUCT	MAT	APPROV
HEAT TREAT	FINISH						ENG.

NAME BOX ASSEM. -ELEC:-
RECOGNITION LIGHT SWITCH
OPP. HAND
CONSOLIDATED AIRCRAFT CORP. SAN DIEGO, CALIF.
DWG. SIZE D
28E5199

E.O. #A51702
E.O. A53527

LET	ALTERATION	DATE	BY
A	REVISED DIM. ADDED REF-7 SUB ASSY (1) NO WT. CHG.	7-15-42	[illegible]
B	DELETED AN3064-8(1) WAS -4(1) & AN3066 -8(1) WAS -4(1). NO. WT. CHG.	8-6-42	Brin

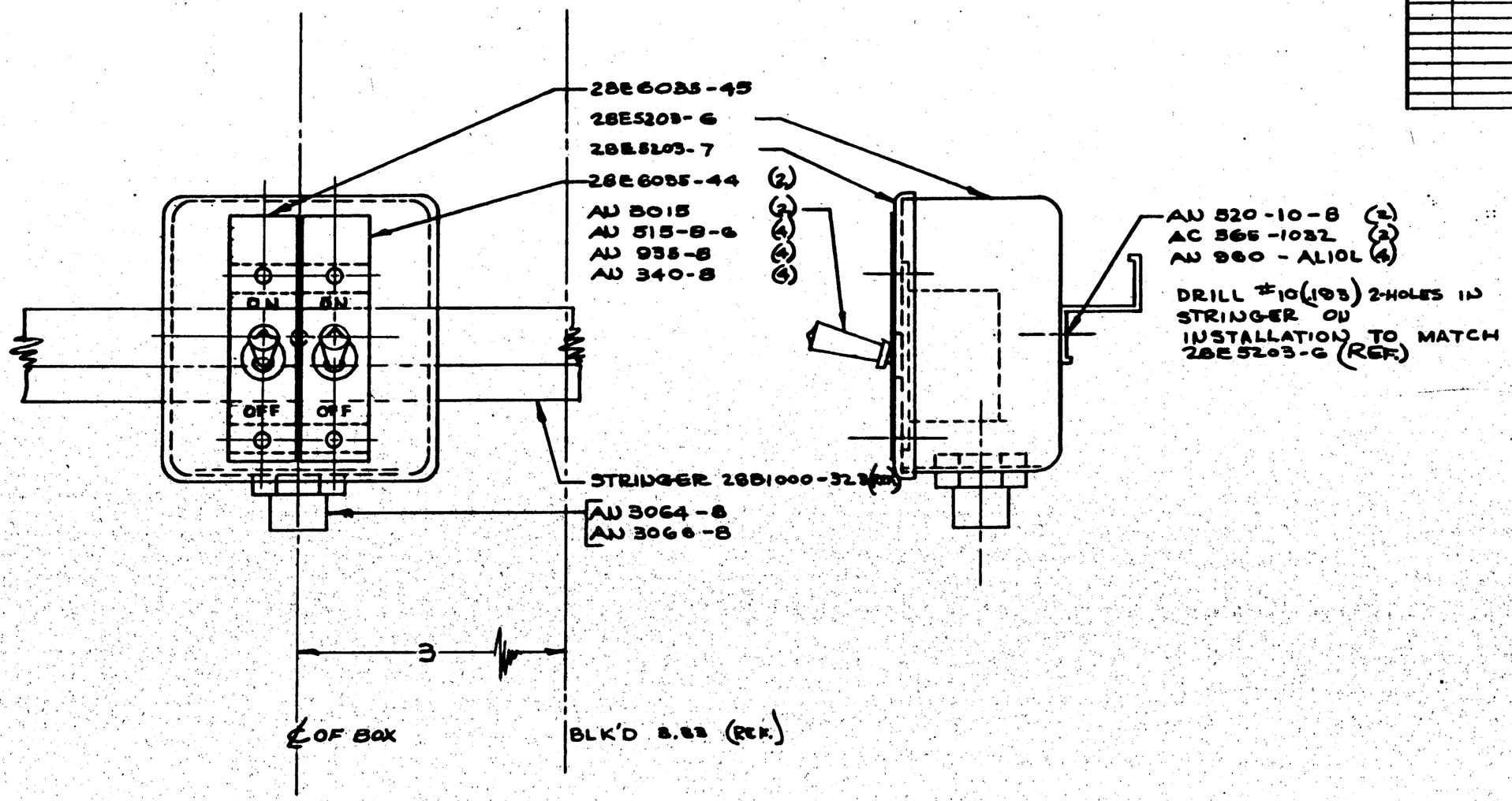

VIEW OUTBOARD - STARBOARD SIDE
FORWARD

CONT'D ON SHTS 2 & 3

ASSY. DASH No.	MODEL	NEXT ASSY.	REQ.
-0	PBY-5A	28E5010	1

REQUIREMENTS PER AIRPLANE

REPLACES
REPLACED BY
492 CALC. WT.
ACT. WT.

LIMIT OF DIMENSIONS UNLESS OTHERWISE SPECIFIED ± 1/32
SCALE 12" = 1'-0"
STAMP PART NUMBER WHERE SHOWN

PART No	STOCK	MATERIAL	SPEC.	LH REQ. -0	RH REQ. -2	LH REQ. -3	RH REQ. -4	LH REQ. -5	RH REQ.
28E6203-6				1					
AN3064-8				1					
AN3066-8				1					
-7 SUB ASSY					1				
28E6035-45				1					
28E6035-44					1				
AN3015				2	2				
AN515-8-6				4	4				
AN935-8				4	4				
AN340-8				4	4				
28E5203-7				1					
-6 SUB ASSY					1				
AN520-10-8				2	2				
AC565-1032				2	2				
AN960-AL10L				4	4				
-7 SUB ASSY				1					
-6 SUB ASSY					1				

PARTS LIST PER ASSY.

AC
NAVY NONE — NONE
HEAT TREAT — FINISH

DRAFT	CHECK	STRUCT	MAT	APPROV	ENGR.
LAUG	[illegible]		EJM		

NAME BOX ASSY. & INSTALL-ELEC. NAVIG. & RADIO OPER. HEATER SW.
OPP. HAND
CONSOLIDATED AIRCRAFT CORP. San Diego, Calif.
SIZE D
28E5204

LET	ALTERATION	DATE	BY

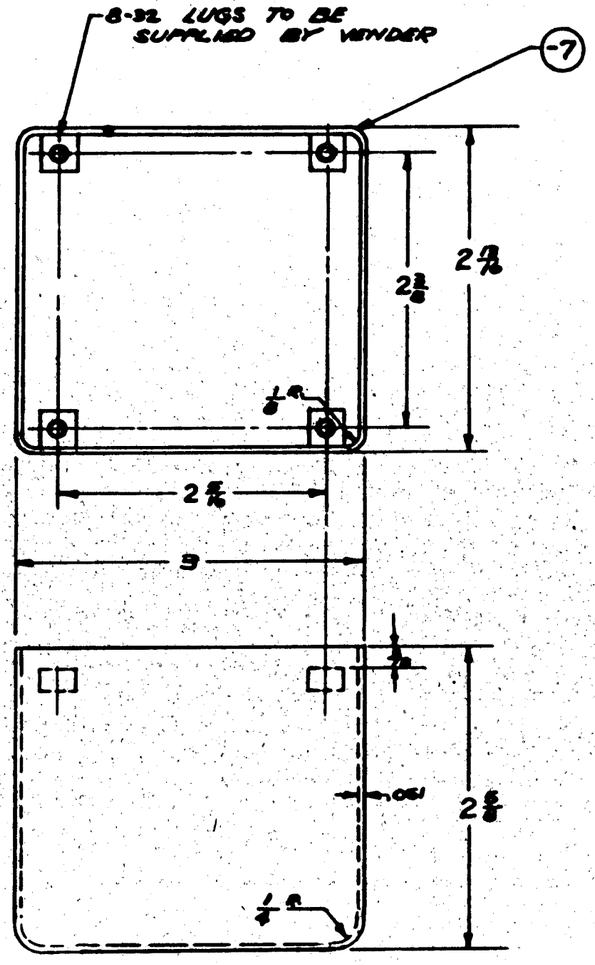

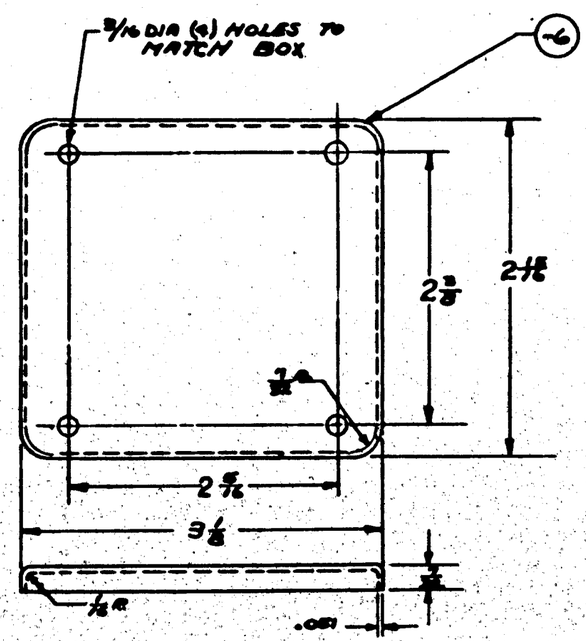

NOTES—
1. COVER & BOX MAY BE PURCHASED FROM POULSEN & NORDON CO. OR FROM MONARCH TOOL & INST. CO.
2. BOX TO BE FURN. WITH TIGHT FITTING COVER, NON-LOSEABLE SCREWS & DURAL WASHERS
3. MATERIAL: 2 SO OR 3 SO AL. FOR BOX; 3 S 1/2 N FOR COVER.
4. P&N COVER No. 1055-3 SO
P&N BOX No. 1055-220 N
MONARCH BOX No. 1027P-220
MONARCH COVER No. CSD1027

CONT. #28476 SHIPS 30 ON
" 2 ON
CONT. # 21876 " 31 ON

ASSY. DASH No.	MODEL	NEXT ASSY.	REQ'D.
	PBY-5A	28E5222	1
	PBY-5A	28E5223	1
	PBY-5A	28E5218	1
	PBY-5	28E5223	1
-0	PBY-5	28E5223	1

REQUIREMENTS PER AIRPLANE

REPLACES 28E 1095 — 28E 485 CALC WT.
REPLACED BY — ACT WT.
SCALE 12"=1'0"
+ 1/32 —
STAMP PART NUMBER WHERE SHOWN

PART No	STOCK	MATERIAL	SPEC.	LH REQ.	RH REQ.	LH REQ.	RH REQ.	LH REQ.	RH REQ.	LH REQ.	RH REQ.	LH REQ.	RH REQ.
PARTS LIST PER ASSY.				-0		-2		-3		-4		-5	
-1	BOX	C.R.S.	NOTE 3	NOTE 3		1							
-2	COVER	AL. ALLOY SHEET	NOTE 3	NOTE 3									

A C		4-10-42		Quality		Process	Zone	
NAVY		Engineering	E.L. Nance		J.C.		Mfg. Liaison	
HEAT TREAT	FINISH	DRAFT	CHECK	STRUCT	STAT	APPROV	ENG.	

NAME BOX – ELECTRIC – RADIO, MAGNETO, IGNITION JUNCTION

OPP. HAND

CONSOLIDATED AIRCRAFT CORP. SAN DIEGO, CALIF.

ENG. D SIZE 28E5219

R

LET	ALTERATION	DATE	BY
A	~~REMOVED~~ APPLY SHELLAC TO INSIDE OF COVER & SHELLAC OVER. ADD. NOTE		
	APPLY ----- SHELLAC. PER CHG. NOTICE 37-44 GRUMMAN		
B	REMOVED FROM FACE OF DWG.- 28E5222-7 & 28E5791 FOR -0 ASSY ONLY" W/O WT. CHG.	6-8-42	

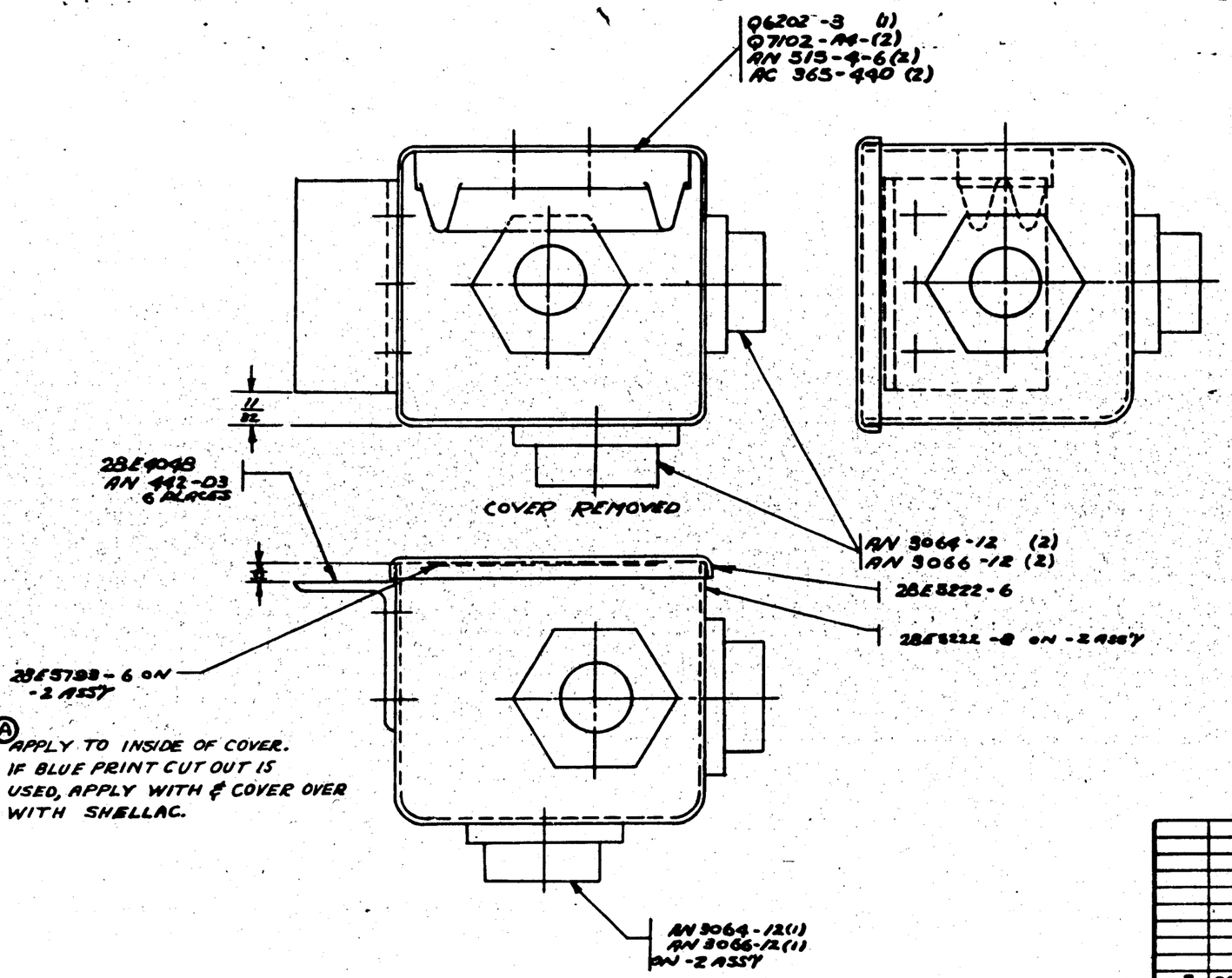

Ⓐ APPLY TO INSIDE OF COVER. IF BLUE PRINT CUT OUT IS USED, APPLY WITH & COVER OVER WITH SHELLAC.

CONT. 88476-53-146

ASSY. DASH NO.	MODEL	NEXT ASSY.	REQ'D
-2	ASY-3A	28E4014	1

REQUIREMENTS PER AIRPLANE

REPLACED 28E 3014 — CALC. WT.

REPLACED BY — ACT. WT.

SCALE 12" = 1'0" — 1/32

STAMP PART NUMBER WHERE SHOWN

PART NO.	STOCK	MATERIAL	SPEC.	LH RH REQ. -0	LH RH REQ. -2	LH RH REQ. -3	LH RH REQ. -4	LH RH REQ. -5
AN 3064-12					3			
AN 3066-12					3			
Q6202-3					1			
Q7102-A4					2			
AC 365-440					2			
AN 515-4-6					2			
AN 442-03					6			
28E4048					1			
28E5791-6						1		
28E5222-8						1		
28E5222-6							1	

PARTS LIST PER ASSY.

AC — NAVY —

HEAT TREAT — FINISH — DRAFT — CHECK — STRUCT — MAT — APPROV — ENG.

NAME BOX ASS'Y-ELEC.- RADIO

OPP. HAND NONE

CONSOLIDATED AIRCRAFT CORP. SAN DIEGO, CALIF.

DWG. D SIZE 28E5221

LET	ALTERATION	DATE	BY

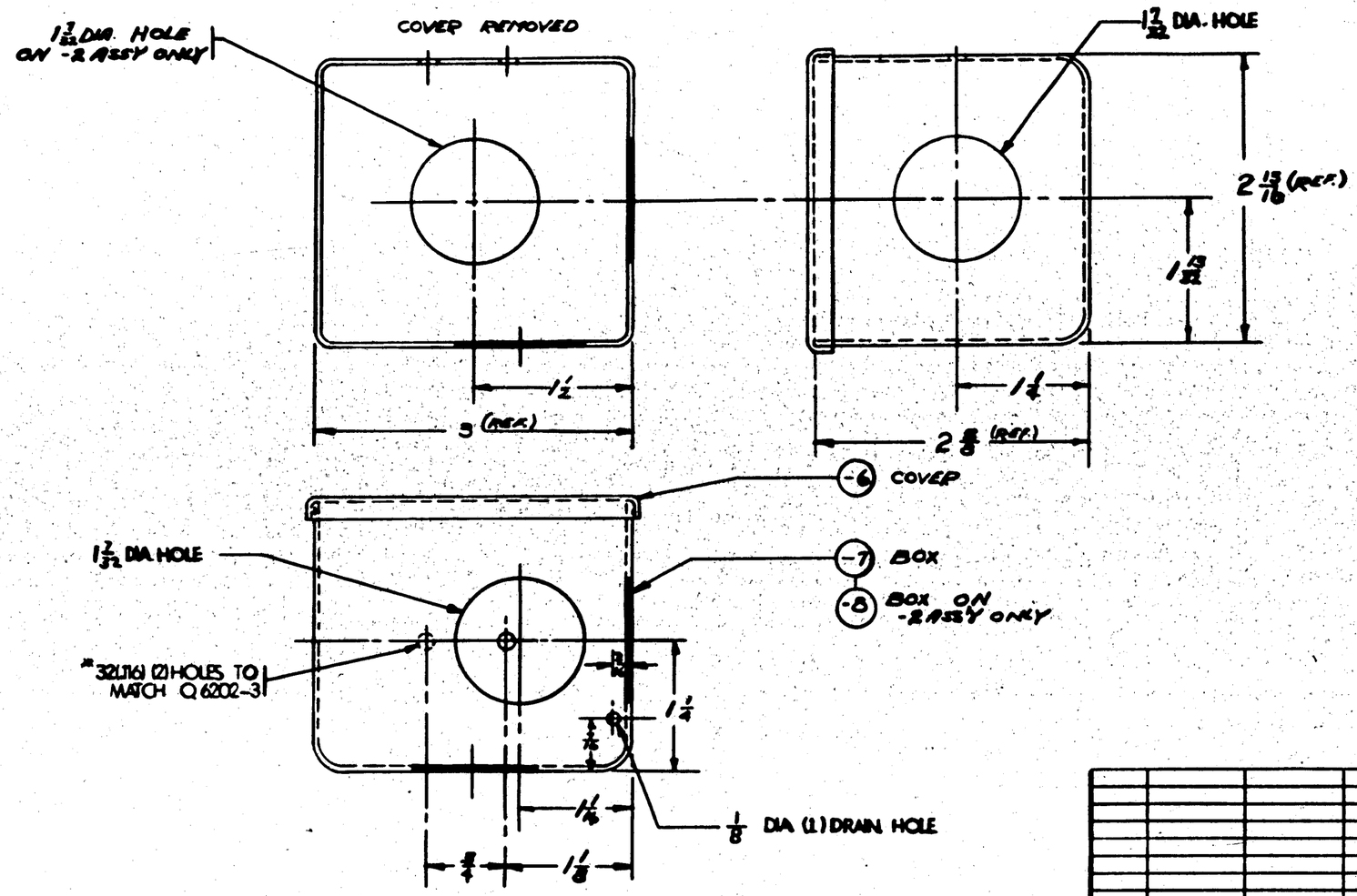

NOTE:-
REMOVE FINISH 3/32 RADIALLY AROUND HOLES

FINISH CODE	
Z	ANODIC TREATMENT
P	P-27 PRIMER
AP	ALUMINIZED PRIMER
C	CADMIUM PLATE

CONT:# 88976 53 ON
CONT:# 91876 91 ON

ASSY. DASH NO.	MODEL	NEXT ASSY.	REQ'D.
-2	PBY-5A	28E5221	1
-0	PBY-5	28E5221	1

REQUIREMENTS PER AIRPLANE

REPLACED 28E5019 — 283 LBS GALC. WT.
REPLACED BY — ACT. WT.
UNLESS OTHERWISE SPECIFIED: ± 1/32 — SCALE 12" = 1'0"
STAMP PART NUMBER WHERE SHOWN

PART NO.	STOCK	MATERIAL	SPEC.	LH REQ.	RH REQ.	LH REQ.	RH REQ.	LH REQ.	RH REQ.	LH REQ.	RH REQ.	LH REQ.	RH REQ.
				-0		-2		-3		-4		-5	
-8	MAKE FROM	28E5219-7				1							
-7	MAKE FROM	28E5219-7		1									
-6	MAKE FROM	28E6219-6		1		1							

PARTS LIST PER ASSY.

AC — NAVY NONE — HEAT TREAT — PAINT PAPER INSIDE — FINISH — 6-15-42 ADAMITE — DRAFT — CHECK — STRUCT. — MAT — APPROV. — ENG.
GERBER — J.C. — PICAS — ZUCK — REVISED

NAME BOX-ELECTRICAL - RADIO
OPP. HAND
CONSOLIDATED AIRCRAFT CORP. SAN DIEGO, CALIF.
SIZE D — 28E5222

LET	ALTERATION	DATE	BY
	E.O. A56656		
A	1 5/16 DIM. CHANGE 1 3/32 & 3 3/32.		
	ADD. WT. CHG.	6-8-42	COMBS
B	REMOVED DIM. 1 1/16, 1 1/32 WAS 3/8,		
	4 SEC. (6) X (2) HOLES WAS 32 (11) X (2)		
	HOLES ADDED DIMS. 3/4, 1 5/8, 2 3/32 & 1 3/8.		
	WT. CHG. NEG.	8-12-42	Brown
C	ADDED C. NO. 464 FOR TOY-		
	ER. NO WT. CHG.	8-25-42	

COVER REMOVED

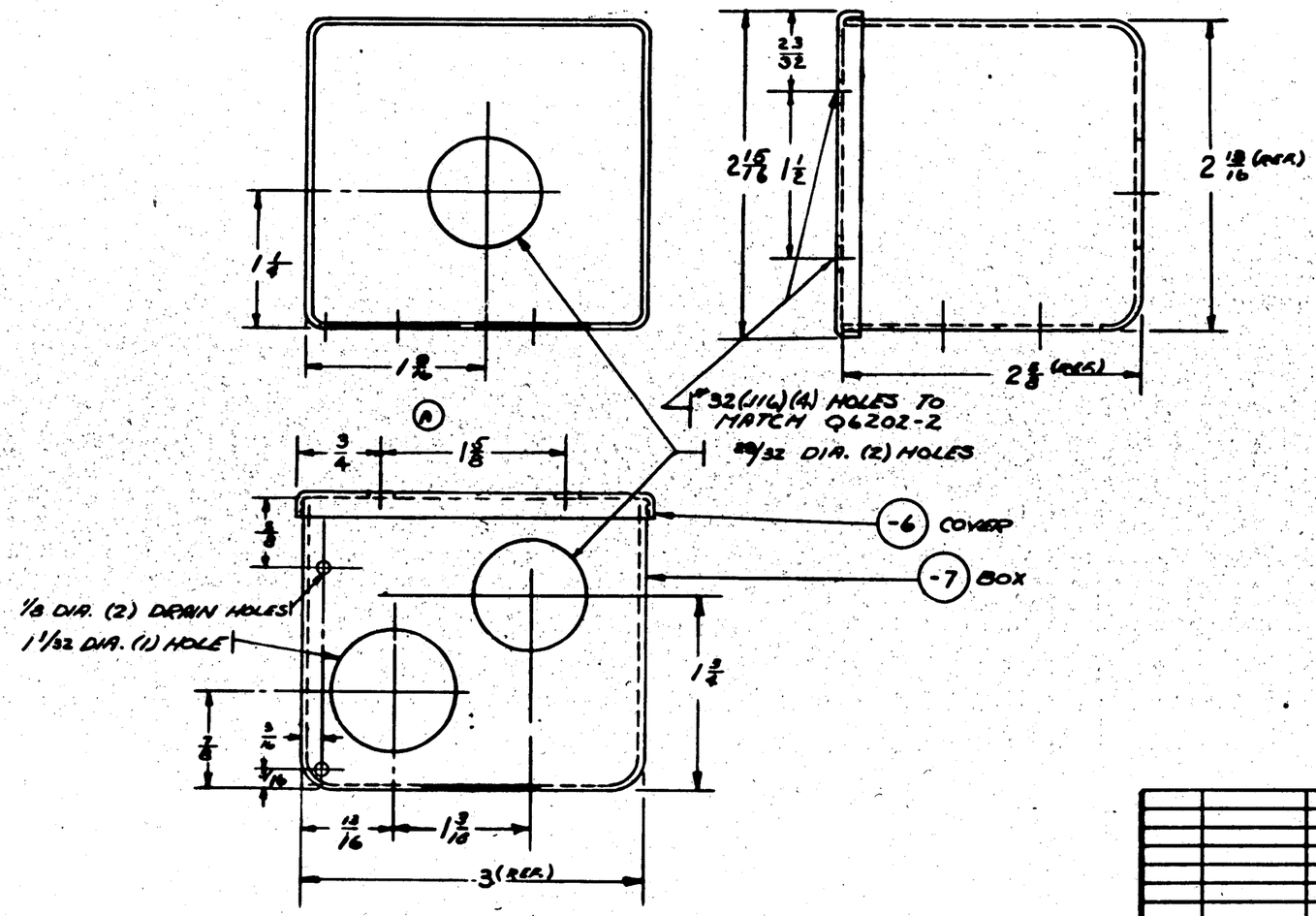

NOTE—
REMOVE FINISH 3/32 RADIALLY AROUND HOLES

FINISH CODE	
Z	ANODIC TREATMENT
P	P-27 PRIMER
AP	ALUMINIZED PRIMER
C	CADMIUM PLATE
GP	GREEN PRIME

C. NO. 464 FOR 28E5226 SUPSN -0 REQ'D
CONT. NO. 21876 SUPSN -0 REQ'D

ASSY. DASH NO.	MODEL	NEXT ASSY.	REQ.
REQUIREMENTS PER AIRPLANE			
REPLACED 28E3018		.235 ALC GAGE WT.	
REPLACED BY		ASY. WT.	
LIMIT OF DIMENSIONS UNLESS OTHERWISE SPECIFIED ± 1/32	SCALE 12"=1'0"		
STAMP PART NUMBER WHERE SHOWN			

PART No.	STOCK	MATERIAL	SPEC.	LH REQ.	RH REQ.	LH REQ.	RH REQ.	LH REQ.	RH REQ.	LH REQ.	RH REQ.	LH REQ.	RH REQ.
PARTS LIST PER ASSY.				-0		-2		-3		-4		-5	
-7	MADE FROM	28E5219-7		1									
-6	MADE FROM	28E5219-6		1									

AC		6-11-42		PACIFIC	ZUCK
NAVY NONE	12-16P OUTSIDE ONLY	DRAFT		7-29-42	
HEAT TREAT	FINISH	DRAFT	DESIGN	STRUCT	WT.	APPROV.	ENG.

NAME BOX – ELECTRIC – MAGNETO

OPP. HAND NONE

CONSOLIDATED AIRCRAFT CORP. San Diego, Calif.

SIZE D

28E5223

LET	ALTERATION	DATE	BY
A	REMOVED NOTE "SHELLAC TO ...		
	... SHELLAC OVER." (WAS CAN ...		
B	CHANGED -2 ASSY FROM 28E4048-7 ...		
	ASSY EXCEPT ADDED 28E4048-7 ...		
	& AN442-AD3 WAS CAN ...		
C	CALCULATED WT. AND WAS CAN ...		

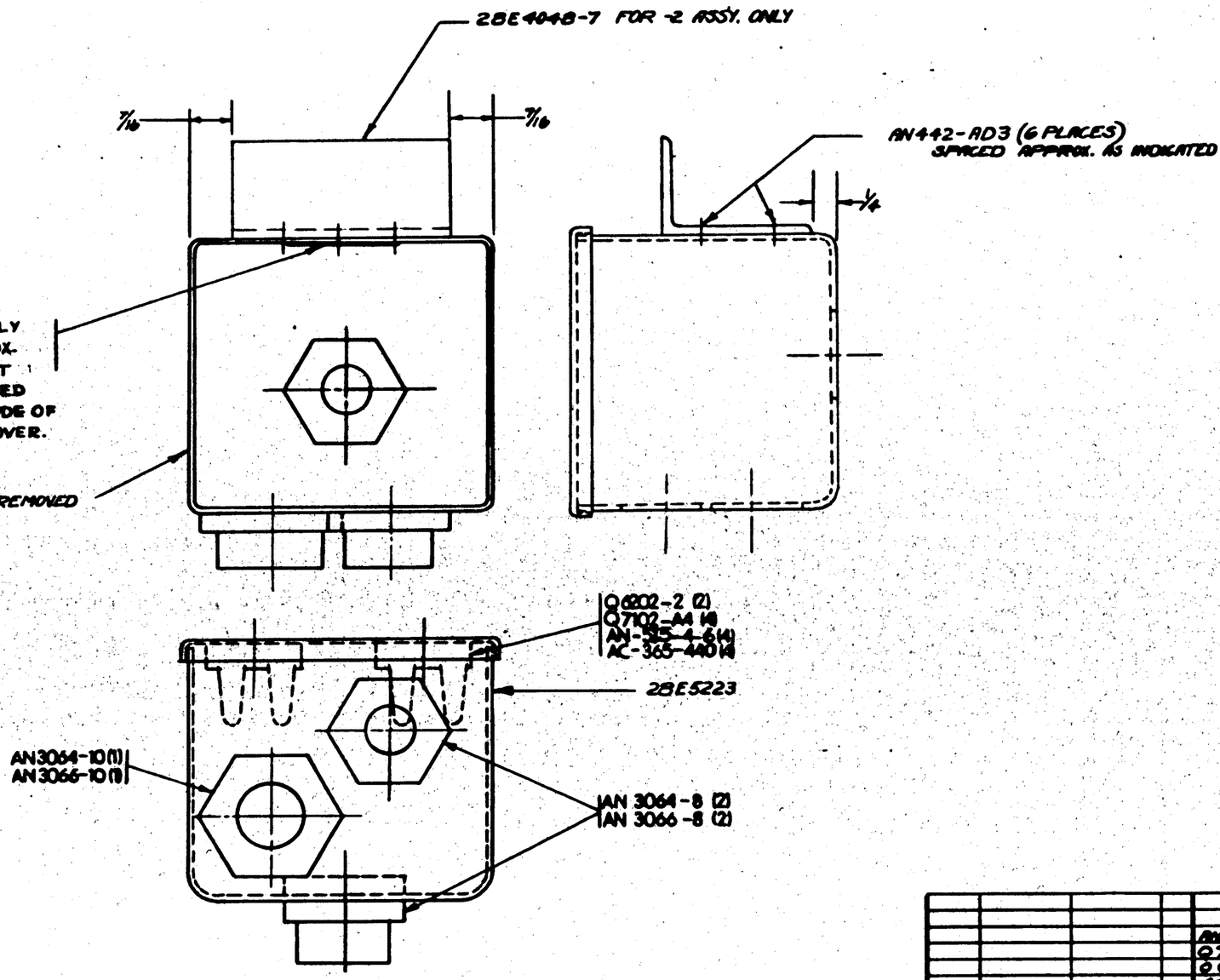

CONT. #88476 C.N. 1 to 464 53 ON
CONT. #91870 21 ON

ASSY. DASH No.	MODEL	PART ASSY.	REQ.
-2	PBY-5A	28E8015	1
-0	PBY-5A	28E8015	1
-0	PBM-5	28E8015	1

REQUIREMENTS PER AIRPLANE

REPLACES 28E8015 — .54 Orig. Wt.

REPLACED BY — Adv. Wt.

UNLESS OTHERWISE SPECIFIED ± 1/32 — SCALE 12"=1'0"

STAMP PART NUMBER WHERE SHOWN

PART No.	STOCK	MATERIAL	SPEC.	-0 LH REQ.	-0 RH REQ.	-2 LH REQ.	-2 RH REQ.	-3 LH REQ.	-3 RH REQ.	-4 LH REQ.	-4 RH REQ.	-5 LH REQ.	-5 RH REQ.
AN442-AD3				4	4								
Q7102-A4				2	2								
Q6202-2				4	4								
AC 365-440				4	4								
AN815-6-6				6	6								
AN3066-10				1	1								
AN3064-10				1	1								
AN3066-8				2	2								
AN3064-8				2	2								
28E4048-7					1								
28E5798-6				1									
28E5223				1									

PARTS LIST PER ASSY.

A.C.		DWG. REL.		ANOX	STOCK
NAVY ——	——	DAMITS ASSY	J.C.		APPROVED
HEAT TREAT	FINISH	DRAFT	CHECK	STRUCT	MAT	APPROV	ENG.

NAME: BOX ASSEMBLY — ELECTRIC — MAGNETO

OPP. HAND: NONE

CONSOLIDATED AIRCRAFT CORP. San Diego, Calif.

SIZE D — 28E5224

R

LET	ALTERATION	DATE	BY

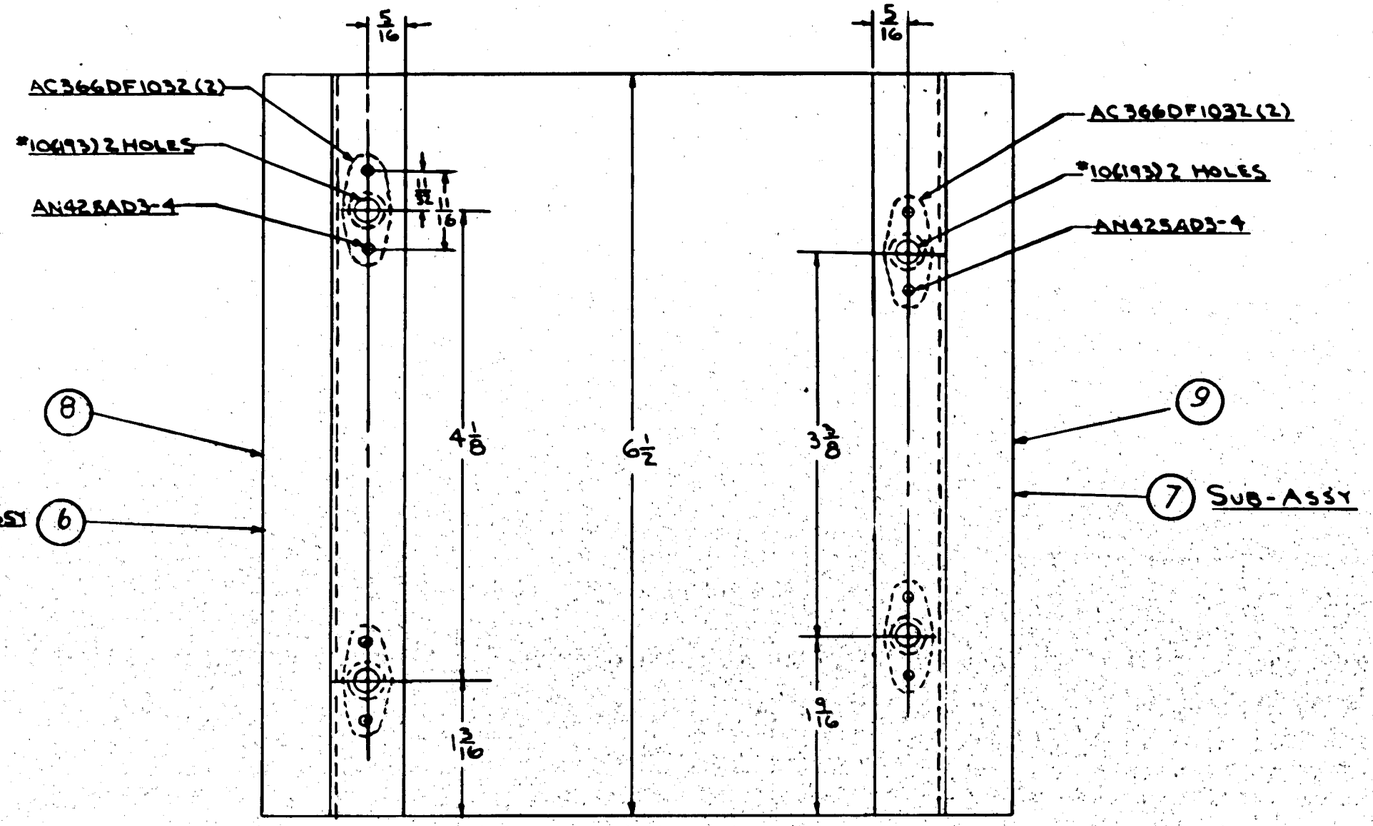

ASSY. DASH No.	MODEL	NEXT ASSY.	REQ.
-7	PBY-5	28E5134	1
-6	PBY-5	28E5134	1

REQUIREMENTS PER AIRPLANE

REPLACES — CALC. WT.

REPLACED BY — ACT. WT.

ALLOW ON DRAWINGS UNLESS OTHERWISE SHOWN: ± 1/32 — SCALE 12"=1'-0"

STAMP PART NUMBER WHERE SHOWN

AC366DF1032
AN425AD3-4
-9 KJA040X6B AL.AL24ST4GA9T 1
-7 SUBASSY. 1

AC366DF1032
AN425AD3-4
-8 KJA040X6B AL.AL24ST4GA9T 1
-6 SUBASSY 1

PART No.	STOCK	MATERIAL	SPEC.	LH REQ. -0	RH REQ. -2	LH REQ. -3	RH REQ. -4	LH REQ. -5	RH REQ.

PARTS LIST PER ASSY.

AC — NAVY — HEAT TREAT — P-AP FINISH

5-7-42 — DRAFTING — DRAFT — CHECK — STRUCT — MAT — APPROV — ENG

NAME BR'KT ASS'Y-ELEC-VOLTAGE REGULATOR

CONSOLIDATED AIRCRAFT CORP. SAN DIEGO, CALIF.

OPP. HAND NONE

DWG. SIZE D — 28E5227

R 5-13-42

E.O.-A 45197
E.O.-A59001 (MC #6) 4-4)
E.O. 62197 (32-3)

LET	ALTERATION	DATE	BY
A	-6 WAS -7 & -7 WAS -6	7/42	
B	ADDED -8. -8 WT. 1.0 DA	12-23-42	
C	CHG'D NOT ASSY FOR CONT. 91876 #91 ON FOR -6 ASSY TO 28E5265		
	(9) WAS 28E40M. NO WT. CHG.	12-23-42	

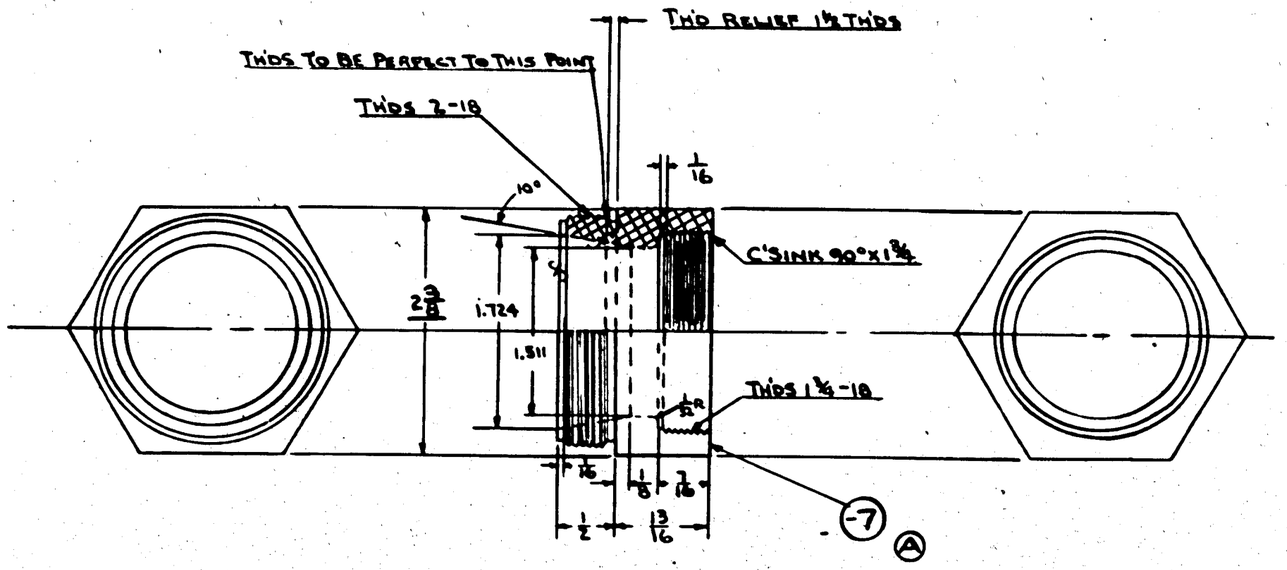

THREADS TO BE IN ACCORDANCE WITH SPEC. AN-GGG-S-126 CLASS 3, MEDIUM FIT, NAT'L. EXTRA FINE THREAD SERIES. THREADS TO BE A HAND FIT TO STANDARD GAGES.

THE FINISH SHALL BE SMOOTH MACHINE FINISH WHERE MARKED √

REMOVE ALL BURRS AND SHARP EDGES.

DIMENSIONS IN INCHES, LIMITS ALLOWED FOR INCHES AND FRACTIONS ± 1/64, DECIMALS ±.005, ANGLES ± ½°, UNLESS OTHERWISE SPECIFIED.

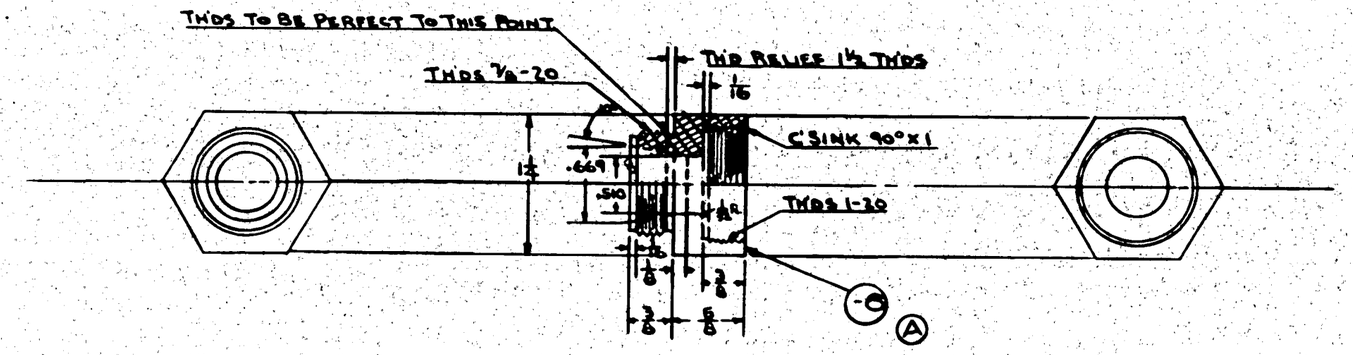

FINISH
DIP IN MELTED PETROLATUM
SPEC AN-VV-P-236 AFTER MANUFACTURE

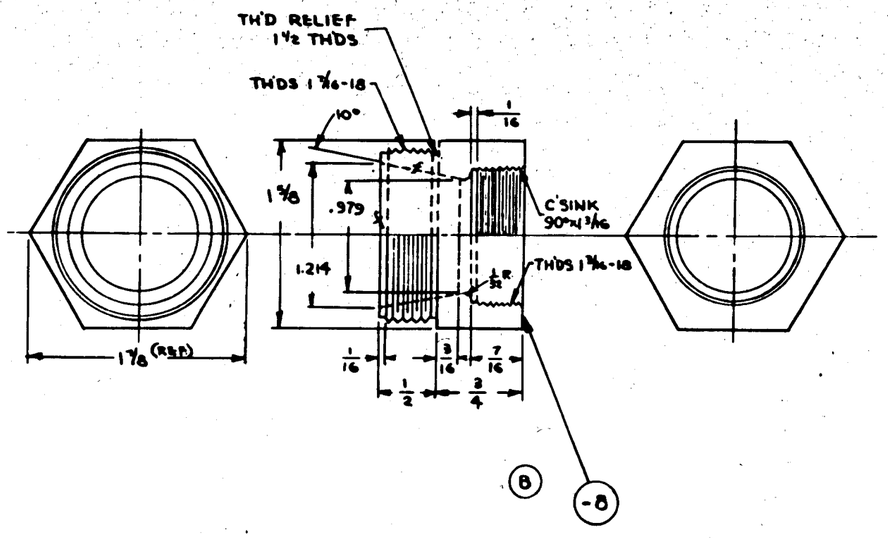

ASSY. DASH NO.	MODEL	NEXT ASSY.	REQ'D
-6	PBY-5	28E5265	4
-8	PBY-5	28E9014	2
-7	PBY-5B	28E6098	2
-7	PBY-5B	28E6049	2 A
-6	28-5AMN	28E9019	4
-6	PBY-5A	28E9019	4
-7	28-5AMN	28E5030	1
-7	PBY-5 & 5A		1 EA
-6	28-5AMN		1
-6	PBY-5 & 5A	28E5030	1 EA
-7	28-5AMN	28E9014	2
-7	PBY-45 & 5A	28E4014	2 EA

(32-3)
CONT. 91876-91 ON
CONT. 91876 #91 ON (ACT 03-43)
#1-45
CONT. 88476 #53 ON
CONT. 91876 #91 ON
CONT. 88476 #53 ON

REQUIREMENTS PER AIRPLANE

REPLACES — CALC. WT.

REPLACED BY — ACT. WT.

LIMIT ON DIMENSIONS UNLESS OTHERWISE SPECIFIED: ± NOTED — SCALE 12" = 1'-0"

STAMP PART NUMBER WHERE SHOWN

PART NO	STOCK	MATERIAL	SPEC.	LH REQ.	RH REQ.	LH REQ.	RH REQ.	LH REQ.	RH REQ.	LH REQ.	RH REQ.	LH REQ.	RH REQ.
	PARTS LIST PER ASSY.			-0		-2		-3		-4		-5	
-8	1⅝ HEX. x 1 7/8	ALUM. ALLOY	46A9 COND T										
-7	1¾ HEX. x 1 7/8	ALUM. ALLOY	46A9 COND T										
-6	1¼ HEX. x 1 7/8	ALUM. ALLOY	46A9 COND T										

AC		5-12-42	
NAVY	NOTED	REVISIONS	
HEAT TREAT	FINISH	DRAFT	CHECK / STRUCT / MAT / APPROV / ENG.

NAME ADAPTER-ELEC.-CANNON PLUG — OPP. HAND

CONSOLIDATED AIRCRAFT CORP. SAN DIEGO, CALIF.

DWG. D — 28E5228

SIZE A

E.O. #A52281

LET	ALTERATION	DATE	BY
A	ADDED 6½ DIM. MATL OF -8 .040X19½X3½ WAS .040X17½X3½. (NEG. WT. CHG.)	8-6-42	MARSH

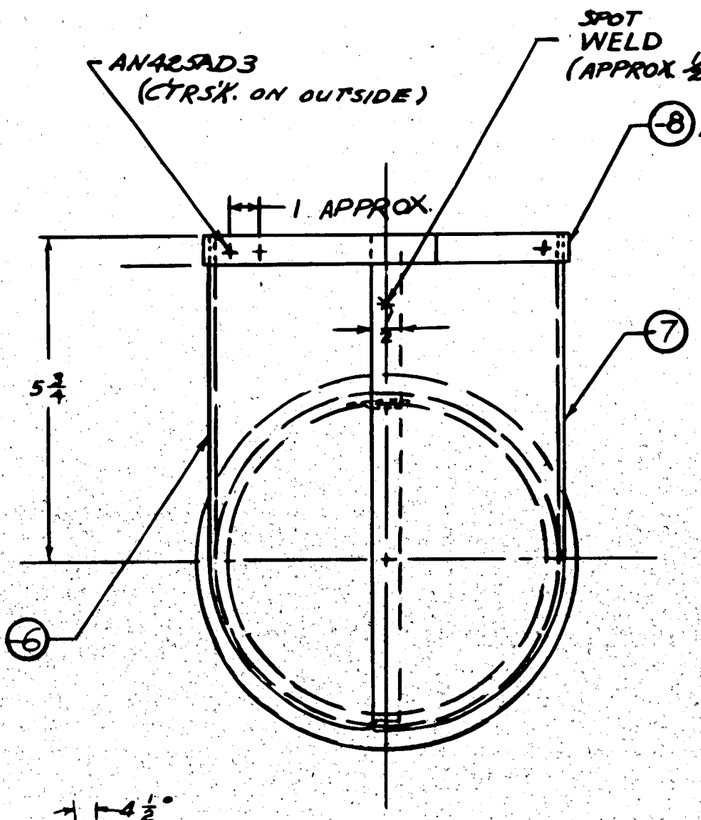

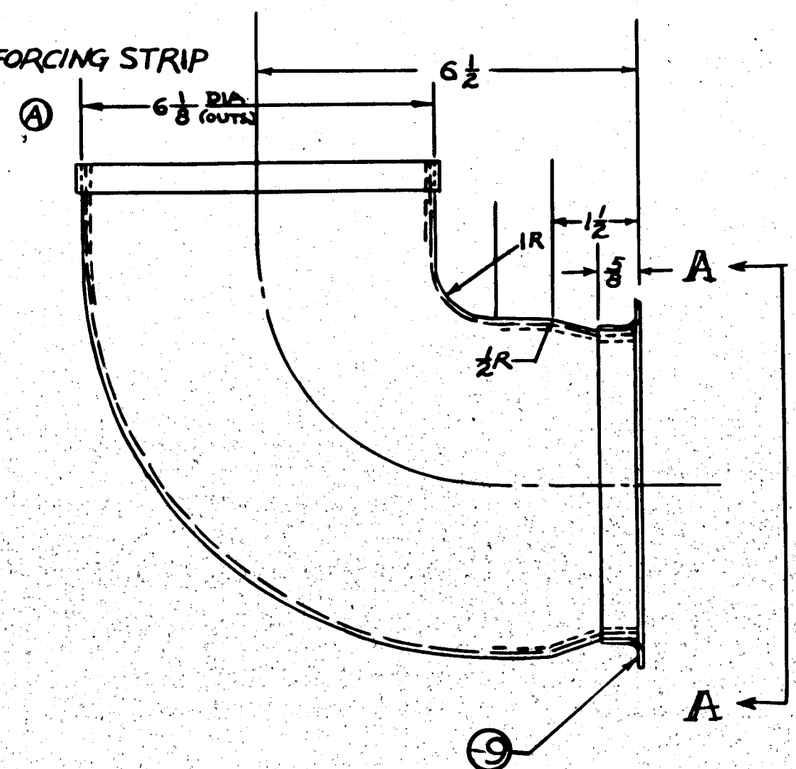

SPOTWELD TO 6¢-7 (REF.)

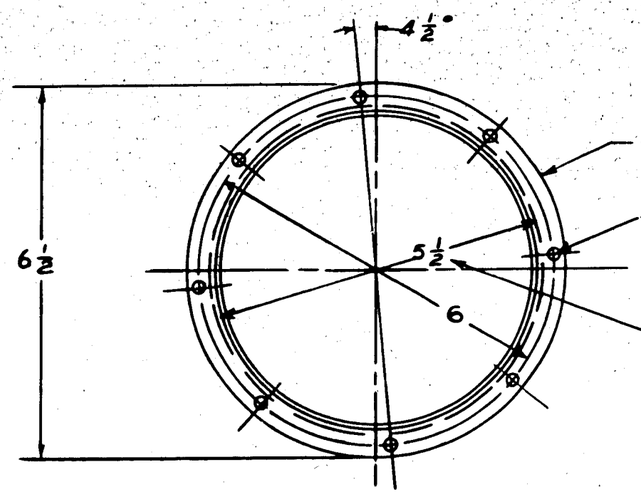

DRILL 7/32
8 HOLES EQUALLY SPACED
TO SUIT ENCLOSURE OF LAWRANCE
AUX. POWER PLANT DWG. NO. R12280
THIS DIM. TO OUTSIDE SKIN-6¢-7 REF.
(NAVY NO. 2406-2455 INCL.)

VIEW A-A

NOTE: THIS PART TO BE MADE FROM 28E5093 of 2/21/40 WITH ADDITION OF -8. HOLES TO BE DRILLED PER VIEW A-A

AN426AD3

ASSY DASH NO.	MODEL	NEXT ASSY.	REQ.
	PBY-5	28E5091	1

REQUIREMENTS PER AIRPLANE

REPLACES 28E5093 — 1.025 CALC WT.

REPLACED BY — AGT. WT

SCALE 6"-1'-0"

STAMP PART NUMBER WHERE SHOWN

PART NO	STOCK	MATERIAL	SPEC	LH REQ -0	RH REQ -2	LH REQ -3	RH REQ -4	LH REQ -5	RH REQ
-9	.051X7X7	24ST ALC.	47A8 -T	1					
-8	.040X9½X3½			1					
-7	.040X10½X12			1					
-6	.040X10½X12	24ST ALC.	47A8 -T	1					

PARTS LIST PER ASSY.

AC / NAVY — HEAT TREAT — FINISH: Z-P-GP

STOCK — DRAFT — CHECK — STRUCT — MAT — APPROV — ENG

NAME DUCT - AIR INLET - LOWER - AUX. P. P.

OPP. HAND

CONSOLIDATED AIRCRAFT CORP. SAN DIEGO, CALIF.

DWG. SIZE D — 28E5233

R

LET	REVISIONS	DATE	BY
	E.O. A32420		
A	[illegible]		
	[illegible]		
	[illegible]		
	[illegible]		
B	E.O. A30884		
	[illegible]		
	[illegible]		
	[illegible]		
	[illegible]		
	[illegible]		
	E.O. A72870		
C	[illegible]		
	E.O. A69481		
D	CANCELLED -2 ASSY & -4 ASSY		
	ADD -3 ASSY, REMOVED (2)		
	[illegible]		
	HOLES, WT. CH'S. NEG.		

#5(.208) 4-HOLES -0 & -3 ASSY

-3 ASSY ONLY - 25/32 DIA. HOLE Ⓓ

Ⓐ #31(.120) 2 HOLES CTSK. 82° X .225 D. FOR AN 505-4-6 SCREW. JIG LOCATE HOLES TO MATCH QC5102F-9 (REF) -0 & -3 ASSY

23/32 DIA. HOLE (ON -0 & -3 ASSYS)

1 1/2

1

-10 ON -3 ASSY

-6 ON -0 ASSY Ⓓ

25/32 DIA. -HOLE -0 ASSY ONLY

1 1/2

4 5/32 (REF) Ⓒ

2 5/32

1 3/4

1 1/2

25/32 DIA HOLE (-0 ASSY ONLY)

21/32 DIA HOLE FOR -3 ASSY ONLY Ⓓ

1 3/16

2 5/8

2 5/8

TOP VIEW OF BOX WITH COVER REMOVED

NOTE: FINISH: P. INSIDE & P-8P OUTSIDE, REMOVING FINISH 5/32 RADIALLY AROUND HOLES.

BOX MAY BE PURCHASED FROM POULSEN & NARDON 1256-316N BOX 1256-350 COVER Ⓑ

Ⓑ 21/32 D. HOLE -0 ASSY & -3 ASSY

Ⓐ #5(.208) 1 HOLE -0 & -3 ASSY

7

3 1/2 (REF)

1 3/16

1 1/8

5/8

1/4

1/8 DRAIN HOLE 2 REQ'D. -0 & -3 ASSY

FINISH CODE	
Z	ANODIC TREATMENT
P	P-27 PRIMER
AP	ALUMINIZED PRIMER
C	CADMIUM PLATE

GREEN PRIME

PART No.	STOCK	MATERIAL	SPEC.	-0	-2	-3	-4	-5
				LH RH REQ.	LH RH REQ.	LH RH REQ.	LH RH REQ.	LH RH REQ.

PARTS LIST PER ASSY.

| | | | |

LET	ALTERATION	DATE	BY
A	REMOVED (2) #10 (.193) HOLES IN BOTTOM OF BOX. NO WT. CHG.	8-28-42	[illegible]
B	CANCELLED -6L & 6R BRASS FOR PREV. SPEC. SPECIFICATION & CREATED -8L & 8R BRASS NEG. WT. CHG.	11-25-42	[illegible]
C	ADDED 2 #10 (.193) DIA HOLES TO SIDE OF BOX ADDED DIMS. OF 3/8. NO WT. CHG.	2-24-43	[illegible]
D	29/32 DIA..... 8R WAS 5/32 DIA..... 6R ONLY. NO WT. CHG.	7-19-43	MOE
E	REMOVED (1) #10 (.193) DIA. HOLE WITH 3/8 LOCATING DIMS. TO SIDE OF BOX. NO WT. CHG.	9-22-43	[illegible]

E.O. A56033
MCR. 111

E.O. 64037
MCR. 26-3

FR. L15735
"346 to ON

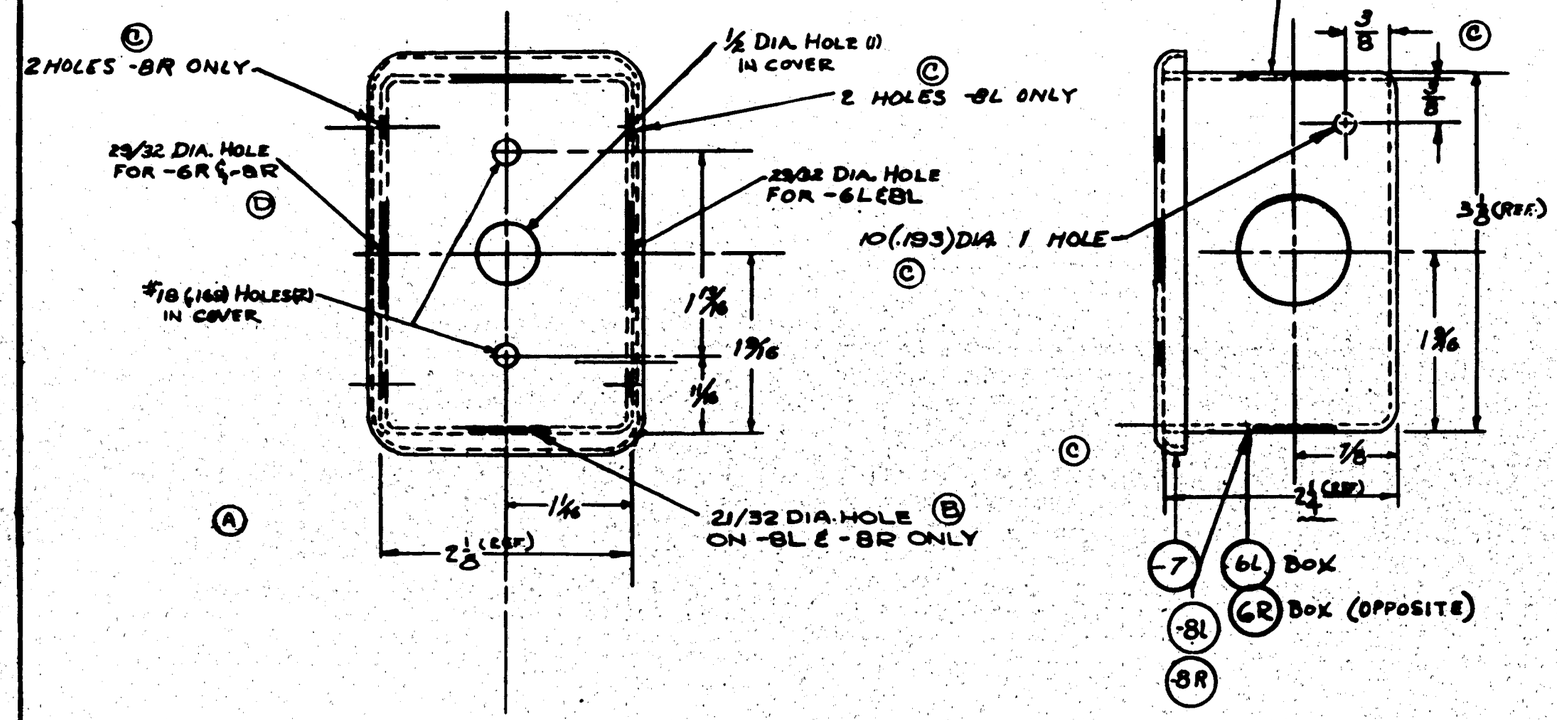

FINISH CODE	
Z	ANODIC TREATMENT
P	P-27 PRIMER
AP	ALUMINIZED PRIMER
C	CADMIUM PLATE

GP GREEN PRIME

NOTES
BOX MAY BE PURCHASED FROM POULSEN & NARDON CO. SPECIFYING P/N 1065-208 BOX, 1065-1 COVER
TINNERMAN FASTENERS #5928
REMOVE FINISH 3/32 RADIALLY AROUND HOLES IN BOX.
FINISH P INSIDE & P-GP OUTSIDE

C# 13595

SHIP # 151 & ON

CONT 91876 # 30 & ON
MCR. 26-3

PART NO.	MODEL	NEXT ASSY.	REQ'D
-7	PBY-5A	28E5243	2
-8L	PBY-5A	28E5243	1
-8R	PBY-5A	28E5243	1
-7	PBY-5B	28E5243	2
-6R	PBY-5B	28E5243	1
-6L	PBY-5B	28E5243	1
-7	PBY-5	28E5243	2
-8L	PBY-5	28E5243	1
-8R	PBY-5	28E5243	1

REQUIREMENTS PER AIRPLANE

REPLACES 41072 SHEET NO.

REPLACED BY ASST. NO.

SCALE 12" = 1'0"

+ 1/32

-8R BOX
-8L BOX } CAC SPEC 1135-208
2 COVER
-6L BOX
-6R BOX } CAC SPEC 1135-208

PART No.	STOCK	MATERIAL	SPEC.	-0 REQ'D	-2 REQ'D	-3 REQ'D	-4 REQ'D	-5 REQ'D
PARTS LIST PER ASSY.				-0	-2	-3	-4	-5

A.N.		KING	[illegible]			
NAVY	NOTED	PATTON	9/6/43			
HEAT TREAT	FINISH	DRAFT	CHECK	STRUCT.	MAT.	APPROV.

NAME BOX-ELECT-CONTINUOUS FEED SWITCH

OPP. HAND NONE

CONSOLIDATED AIRCRAFT CORP. San Diego, Calif.

SIZE D

28E5242

R

LET	ALTERATION	DATE	BY
	E.O.#A81293 - MCR 111(2-2)		
A	CHG'D VIEW TO SHOW BOX MOUNTED ON SIDE. REM. NAF 1148-8(1) & ADDED AN3064-8(1)		
	WT. CHG. NEG.	8-20-43	[illegible]
	E.O.#A63754 MCR 111(2-2)		
B	CANCELLED -0 L/R ASSYS FOR PBY-5B & CREATED -2 L/R ASSYS & -8 SUB-ASSY		
	LIMITED NNE018-236(1) TO -7 SUB ASSY. NO WT. CHG.	8-20-43	[illegible]
	E.O.#A64038 MCR #26-3		
C	ADDED AN3064-4(1) & AN3066-4(1) FOR -0 L/R. REPLACED 28E5242 -6 L/R WITH 28E5242-8 L/R		
	CHG. NEG.	8-20-43	[illegible]
	E.O.#A89654 MCR 89-18		
D	ADDED 28E5362-6 FOR -0L ASSY & 28E5362-7 FOR OR ASSY & NOTE "SHELLAC ---- ASS'Y."		
	WT. CHG. NEG.	8-20-43	[illegible]
	E.O.#A98363		
E	NOTE "SHELLAC ---- ASSY." WAS "SHELLAC ... ASSY. NO WT. CHG.	8-20-43	[illegible]
	E.O.#B2788		
F	REMOVED 2 #10 (.193) HOLES FROM BOTTOM OF BOX & ADDED 2 #10 HOLES TO SIDE OF BOX (WT. CHG. NEG.)	8-20-43	[illegible]
	F.L.R.15734 #3460N		
G	REMOVED (1) #10 (.193) HOLE (1) Q5106D10-8 & (1) AC372D1032 WT. CHG. NEG.	8-23-43	[illegible]

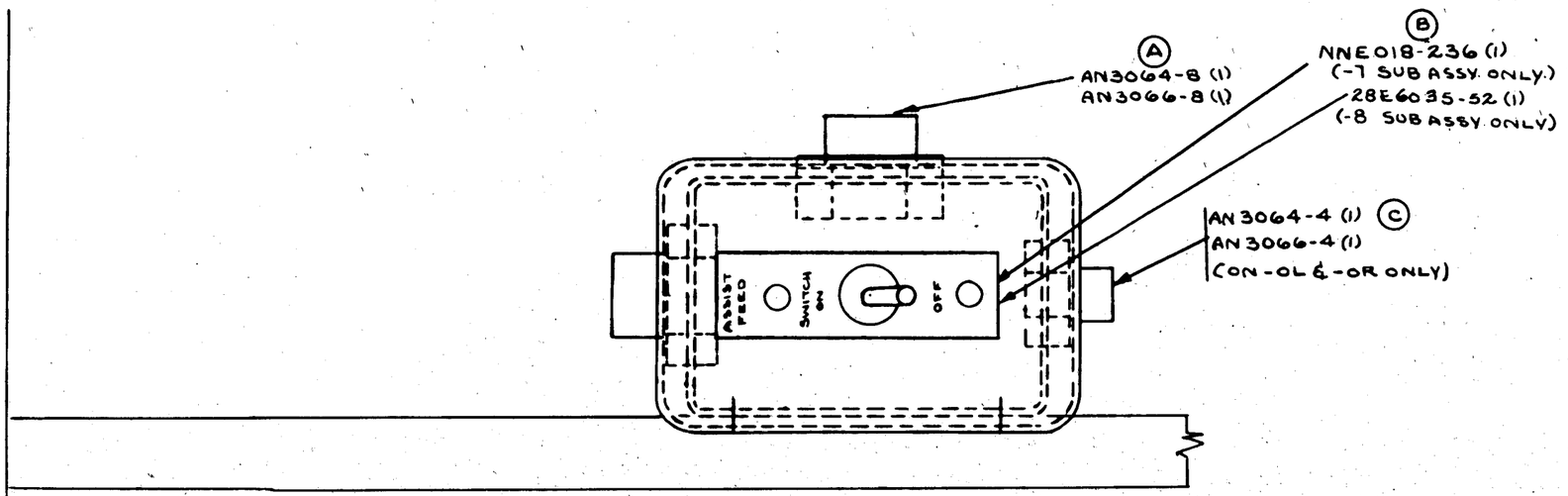

PORT. SIDE LOOKING INBOARD
ST'BD SIDE (OPPOSITE)

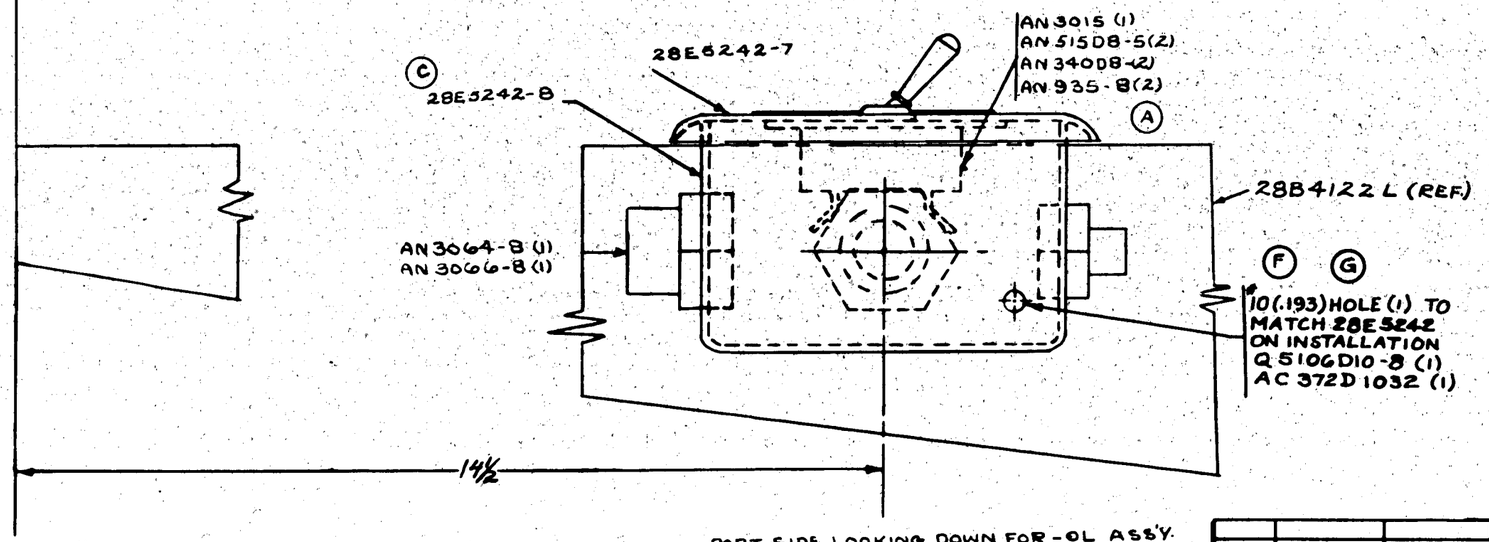

NOTE: (D)

(E) SHELLAC 28E5362-6 TO THE INSIDE OF 28E6242-6R BOX & 28E5362-7 TO INSIDE OF 28E5242-6L BOX FOR -0 ASSY.

C-#13595
SHIP #151 & ON MCR #111 (2 OF 2)
CON'T. 91876 #90 & ON

ASS'Y. SHOWN	MODEL	NEXT ASS'Y.	REQ.
-0R	PBY-5A	28E5254	1
-0L	PBY-5A	28E5254	1
-2R	PBY-5B	28E5254	1
-2L	PBY-5B	28E5254	1
-0R	PBY-5	28E5254	1
-0L	PBY-5	28E5254	1

REQUIREMENTS PER AIRPLANE

REPLACES	.3905 CALC. WT.
REPLACED BY	ACT. WT.
LIMIT OR DIMENSIONS UNLESS OTHERWISE SPECIFIED ± 1/32	SCALE 12" = 1'0"

STAMP PART NUMBER WHERE SHOWN

PART No.	STOCK	MATERIAL	SPEC.	1 LH REQ.	1 RH REQ.	2 LH REQ.	2 RH REQ.	3 LH REQ.	3 RH REQ.	4 LH REQ.	4 RH REQ.	5 LH REQ.	5 RH REQ.
PARTS LIST PER ASSY.				-0		-2		-3		-4		-5	
28E6035-52						1							
AN935-8						2							
AN340D8						2							
AN515D8-5						2							
AN 3016						1							
28E5242-7 -8 SUB- ASSY.						1							
NNE-018-236				1									
AN935-8				2									
AN340D8				2									
AN515D8-5				2									
AN3016				1									
28E5242-7 -7 SUB- ASS'Y				1									
AN3064-8								1	1				
28E5242-6R FOR -2 ASS'Y.								1	1				
28E5242-6L								1					
NAF1148-8								1	1				
AN3066-8								2	2				
28E5242-8R FOR -0 ASS'Y.								1					
28E5242-8L									1				
-6L & -6R SUB ASS'Y.								1	1				
-8 SUB ASS'Y.										1	1		
28E5362-7				1									
AN3066-4				1	1								
AN3064-4				1	1								
AC372D-1032				1	1	1	1						
Q5106D10-8				1	1	1	1						
28E5362-6					1								
-7 SUB- ASSY				1	1								
-6R							1						
-6L SUB- ASSY				1					1				

AC		KINS		
NAVY	NONE	9-19-42	10/31/42	
HEAT TREAT	FINISH	DRAFT	CHECK	STRUCT MAT APPROV ENG

NAME BOX ASSY. & INSTALLATION - ELECT.-CONT FEED SWITCH

OPP. HAND 28E5243R

CONSOLIDATED AIRCRAFT CORP. SAN DIEGO, CALIF.

DWG. D SIZE

28E5243

R

LTR	REVISIONS	DATE	APP'D
A	[illegible]		
	[illegible]		
	[illegible]		
	[illegible]		
B	-6L & -6R WAS ADDED TO NOTE 3 FOR THE CENTER & BOTTOM HOLES. CENTER #10 DIA. HOLE WAS 1/2. REMOVED ARROW THAT WAS SHOWN FROM TOP HOLE TO BOTTOM HOLE MFG & WT. CHG.	5-29-43	HUMM

FLR 15783

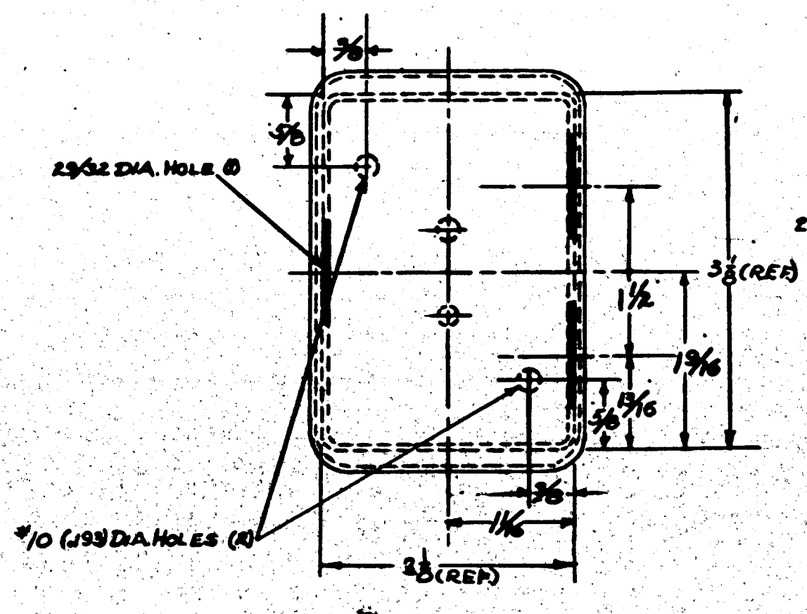

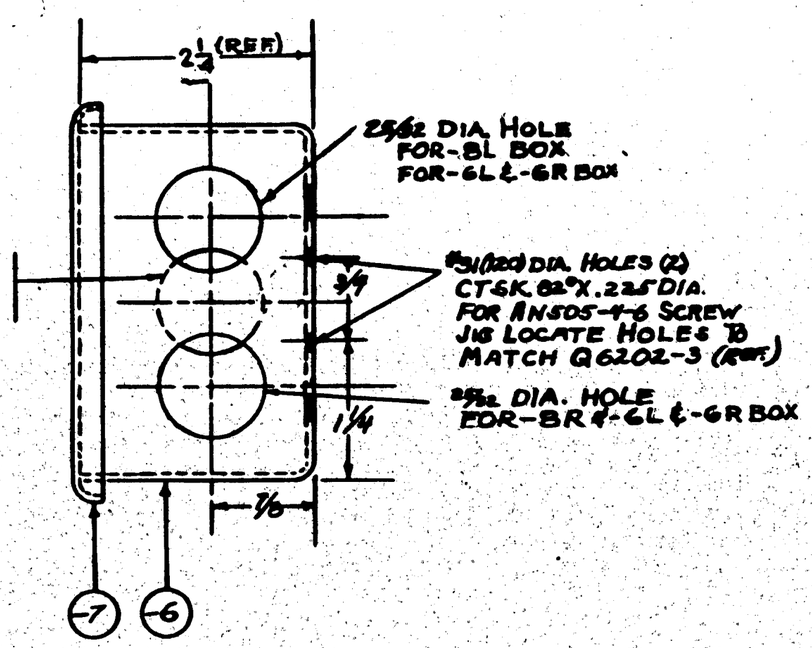

NOTES

BOX MAY BE PURCHASED FROM POULSEN & NARDON CO. SPECIFYING P/N 1065-20B BOX, 1065-1 COVER.
TINNERMAN FASTNERS #5928
REMOVE FINISH 3/32 RADIALLY AROUND HOLES IN BOX.
FINISH P INSIDE & P-GP OUTSIDE

C.91876 #30 #260 NOR #111
SHIP #181 ON →

ASSY. DASH NO.	MODEL	NEXT ASSY.	QTY.
-2R	PBY-5	28ES5245	1
-2L	PBY-5	28ES5245	1
-0	PBY-5B	28ES5245	2

REQUIREMENTS PER AIRPLANE

REPLACES: 110879 Spec. No.
REPLACED BY: Ass'y. No.

SCALE 12" = 1/0"

-7 -6 CAC 133-208

PART NO.	STOCK	MATERIAL	SPEC.	LH REQ. -0	RH REQ. -2	LH REQ. -3	RH REQ. -4	LH REQ. -5	RH REQ.
PARTS LIST PER ASSY.									

AC / NAVY
HEAT TREAT: NOTED
FINISH
KING / BAR
DRAFT: SHOCK, STRUCT, MAT, APP, ENG.

NAME BOX-ELECT CONTINUOUS FEED JUNCTION
OPP. HAND

CONSOLIDATED AIRCRAFT CORP. SAN DIEGO, CALIF.

SIZE D
28ES5244

LET	ALTERATION	DATE	BY
A	CREATED - 2 ASSEMBLY NEG. WT CHG	2-14-43	[illegible]
B	CREATED - 12 SUB ASSEMBLY NEG.		
	WT. CHG.	2-16-43	[illegible]
C	CREATED - 3 ASSEMBLY. NEG. WT.		
	CHG.	2-16-43	[illegible]
D	IN -3L ASS'Y 28E5244-2L (1) WAS 28E5244 (1)		
	IN -3R ASS'Y 28E5244-2R (1) WAS 28E5244		
	REMOVED AN3064-6 (1) & AN3066-6 (1)		
	FROM - 3R ASS'Y. WT. CHG. NEG.	2-16-43	[illegible]
E	REVISED REQ. PER AIRPLANE BLK.		
	NO WT CHG	2-16-43	[illegible]
F	CREATED -13L & -13R SUB-ASSYS.		
	WT. CHG. NEG.	3-4-43	[illegible]

MCR #111 - EQ #A60795
MCR #49 - EQ #A60789A
MCR #89-10 - EQ #A89041
MCR #111 (2nd) EQ #A91085
EQ #A86285

28B4128L (REF)

43/8

28E5244 (1) - D ASSY

#10 (193) HOLES (2) TO MATCH 28E5244 ON INSTALLATION
Q5106 D10-8 (2)
AC 372 D1032 (2)

ST. 6.6
PORT SIDE LOOKING OUTBOARD

AN 3064-8 (1)
AN 3066-8 (1)

28E5244-2L (-3L ASS'Y)
28E5244-2R (-3R ASS'Y)

Q6202-3 (1)

AN 505-4-6 (2)
AC 365-440 (2)

AN 3064-6 (1)
AN 3066-6 (1) FOR -0L & -3L ASS'YS
Ⓓ

AN 3064-6 (1)
AN 3066-6 (1) FOR -0L, -3L & -3R ASS'YS

PORT SIDE LOOKING AFT (-0L & -3L ASSYS)
ST'BD. SIDE LOOKING AFT-OPPOSITE (-3R ASSY.)
Ⓒ

SHIP #151 & on
CONT. #91076 SHIPS #90-260 INCL

Q5106 D10-8 (2)
AC 365 D1032 (2)
#10 (193) HOLES (2) TO MATCH 28E5244 ON INSTALLATION.

2¼

2¼

1½

NAF 1149-8 (1)
AN 3066-8 (1)

Q6202-3 (1)
AN 505-4-6 (2)
AC 365-440 (2)

28E5244 (1)

AN 3064-6 (2)
AN 3066-6 (2)

28B4128R (REF)

VIEW "A" Ⓐ
(-2 ASSEM ONLY)
ST'BD. SIDE LOOKING AFT.
SCALE - 6" = 1'-0"

Ⓒ SHELLAC 28E5363-6 TO INSIDE OF COVER ON -3L ASS'Y AND 28E5363-7 TO INSIDE OF COVER ON -3R ASS'Y.

PART No.	STOCK	MATERIAL	SPEC.	LH REQ. -0	RH REQ. -2	LH REQ. -8	RH REQ. -4	LH REQ. -5	RH REQ.
28E5244-2R				—	—		1		
28E5244-2L				—	1	—			
28E5244				1					
Q6202-3				1	1				
AN505-4-6				2	2				
AC365-440				2	2				
AN3066-8				1		1			
AN3064-8				1		1			
AN3066-6				2		1			
AN3064-6				2	2	1			
SUB-ASSEMBLYS				-12	-13L	-13R			
28E5363-7				—	—	—	1		
28E5363-6				—	—	1	—		
Q5106 D10-8				2	2	2	2		
AC372D1032				2	—	2	2		
NAF1149-8				—	1	—	—		
AC365D1032				—	2	—	—		
-13R	SUB ASSY.			—	—	—	1		
-13L	SUB ASSY.			—	—	1	—		
-12	SUB ASSY.			1	1	—	—		

PARTS LIST PER ASSY.

DASH No.	MODEL	NEXT ASS'Y	REQ.
-1	PBY-5B	28E5254	1
-2	PBY-5B	28E5254	1
-3L	PBY-5	28E5254	1
-3R	PBY-5	28E5254	1

REQUIREMENTS PER AIRPLANE

REPLACES — CALC. WT.
REPLACED BY — ACT. WT.

UNLESS OTHERWISE SPECIFIED ± 1/32 — SCALE 6 INCHES = 12"-1'0"

STAMP PART NUMBER WHERE SHOWN

A.C.			King						
NAVY	NONE		8-18-43				9-3-43		
HEAT TREAT	FINISH		DRAFT	CHECK	STRUCT	MAT	APPROV	ENG.	

NAME BOX ASSY AND INSTALL. -ELECT- CONT. FEED JUNCTION

CONSOLIDATED AIRCRAFT CORP. SAN DIEGO, CALIF.

OPP. HAND 28E5245 R

SIZE D

28E5245

R

E.O. A62354

E.O. A64081

S/E.O. 62040

LET	ALTERATION	DATE	BY
A	CHG'D NEXT ASS'Y FROM 28E5268 TO 28E5081 ADDED $\frac{21}{32}$ R.	9-28-42	[illegible] OR
B	ADDED DIM. $\frac{11}{16}$, $\frac{11}{32}$ & NOTE "$\frac{13}{64}$--- HOLES"; "#40--- HOLES" REMOVED FROM D'WG. & S/M, AC366-DF1032(B) & AN425-D3 (NO WT. CHG.)	10-12-42	CROSS-FIELDS OR
C	REMOVED $\frac{11}{16}$ & $\frac{11}{32}$ DIMS. & NOTES: $\frac{13}{16}$ DRILL (B) HOLES & #40 DRILL (C) HOLES. ADDED AC366-DF1032(B) & AN425D3 NEG. WT. CHG.	12-22-42	RMS
D	REMOVED NOTE "FLANGES TO FIT INSIDE 28E5263 DUCT." CHG'D D'WG TO SHOW AC366DF1032(B) ON OUTSIDE OF FLANGE. (NO WT. CHG.	5-2-43	[illegible] OR

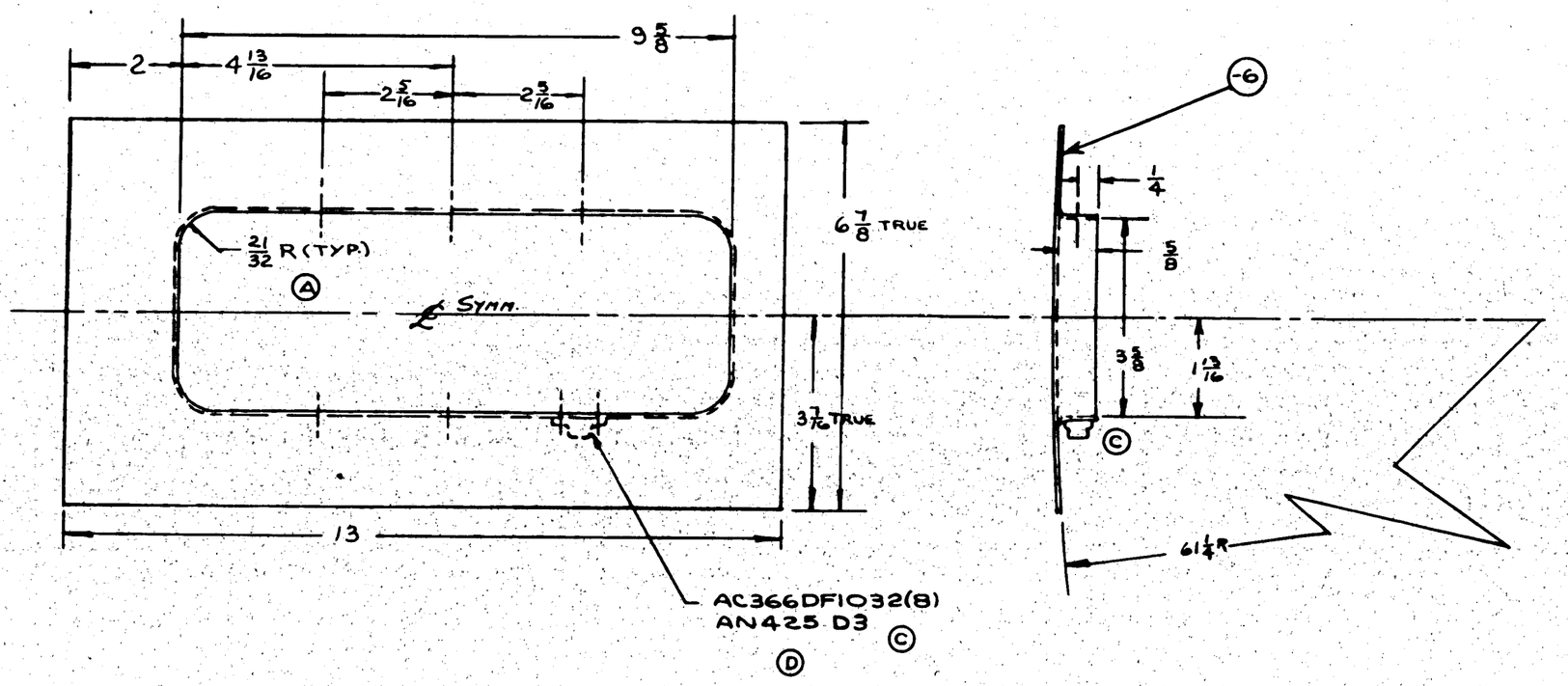

C.91876
#91 & ON

ASSY. DASH NO.	MODEL	NEXT ASSY.	REQ'D
	PBY-5	28E5081	1

REQUIREMENTS PER AIRPLANE

REPLACES — CALC WT.

REPLACED BY — ACT. WT.

LIMIT OR ENGINEERING TOLERANCES UNLESS OTHERWISE SPECIFIED: ± 1/32

SCALE 6"=1'-0"

STAMP PART NUMBER WHERE SHOWN

AN425D3
AC366DF1032

8

PART No	STOCK	MATERIAL	SPEC	LH REQ.	RH REQ.	LH REQ.	RH REQ.	LH REQ.	RH REQ.	LH REQ.	RH REQ.	LH REQ.	RH REQ.
	-6 .051X7/8X13/8	ALC 24ST	4T4										
PARTS LIST PER ASSY.				-0		-2		-3		-4		-5	

AC								
NAVY	7-P-2GP	1-[illegible]-42						
HEAT TREAT	FINISH	DRAFT	CHECK	STRUCT	MAT	APPROV	ENG	

NAME HULL OPENING PLATE-EXH. DUCT-AUX. POWER PLANT

OPP. HAND

CONSOLIDATED AIRCRAFT CORP. SAN DIEGO, CALIF.

DWG SIZE D R

28E5258

LET	ALTERATIONS	DATE	BY
	E.O.A62800		
A	25/32 D (1) HOLE WAS 1 1/32 D. NEG. WT. CHG.	10-12-42	
B	29/32 D (1) HOLE WAS 25/32 D. 29/32 D (1) HOLE WAS 1 1/32 D. NEG. WT. CHG.	10-12-42	
	E.O.A62809		
C	E.O. #A98448 1 5/32 DIA HOLE WAS 25/32 DIA HOLE. NO WT CHG.	1-22-43	
D	CR22485 ON FACE OF DWG. ADDED 1/8 DIA. DRAIN (1) HOLE WT. CHG. NEG.	2-18-43	
E	ADDED 4 DIM. NO. WT. CHG.	2-4-43	
F	C.R. #045283 IN: B/M. LIMITED -6 FOR SHIP #1514 TO 1618. ADDED -8 BOX FOR SHIP 1614 & ON. NO WT. CHG.	10-18-43	

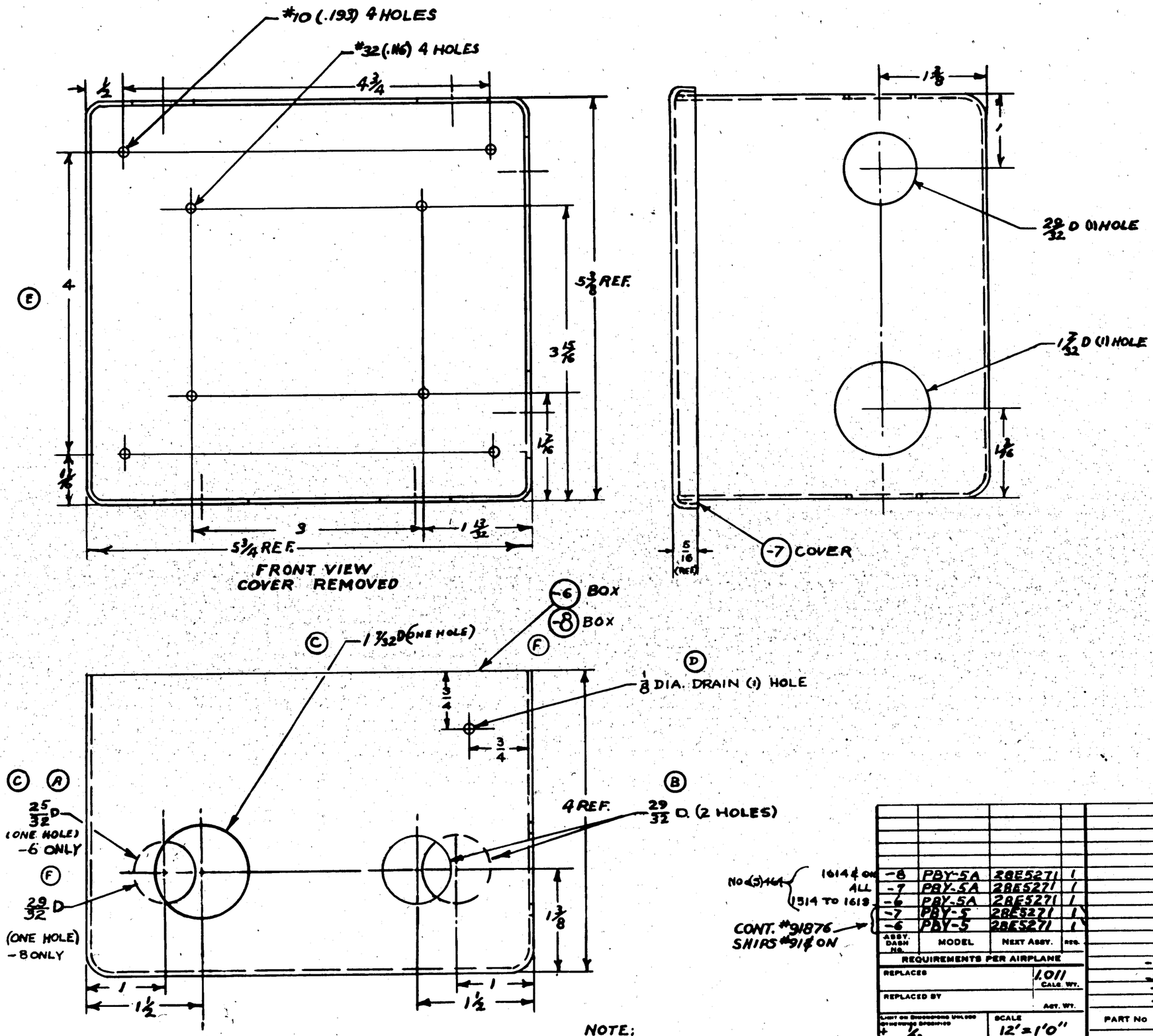

NOTE:
-6, -7 & -8 MAY BE PURCHASED FROM POULSEN & NARDON. BOX #1236-400 COVER #1236-350.

ASSY. DASH NO.	MODEL	NEXT ASSY.	REQ.	
-8	PBY-5A	28E5271	1	1614 & ON
-7	PBY-5A	28E5271	1	ALL
-6	PBY-5A	28E5271	1	1514 TO 1613
-7	PBY-5	28E5271	1	
-6	PBY-5	28E5271	1	

CONT. #91876 SHIRS #91 & ON

REQUIREMENTS PER AIRPLANE

REPLACES — 1.011 CALC. WT.

REPLACED BY — ACT. WT.

SCALE 12" = 1'0"

STAMP PART NUMBER WHERE SHOWN

-7 C.A.C. Box # 42-400 N
-8
-7 } C.A.C. " Box # 42-400N
-6

PART NO	STOCK	MATERIAL	SPEC.	LH REQ. -0	RH REQ. -0	LH REQ. -2	RH REQ. -2	LH REQ. -3	RH REQ. -3	LH REQ. -4	RH REQ. -4	LH REQ. -5	RH REQ. -5

PARTS LIST PER ASSY.

AC — NAVY — HEAT TREAT

P - INSIDE P-G.P. OUTSIDE — FINISH

G.C. FRENCH 9/7/42 — DRAFT

CHECK — STRUCT — MAT — APPROV — ENG.

NAME BOX-ELEC.-
RADIO POWER JUNCTION

CONSOLIDATED AIRCRAFT CORP. SAN DIEGO, CALIF.

OPP. HAND

DWG. D SIZE 28E5270

R 9 16 42

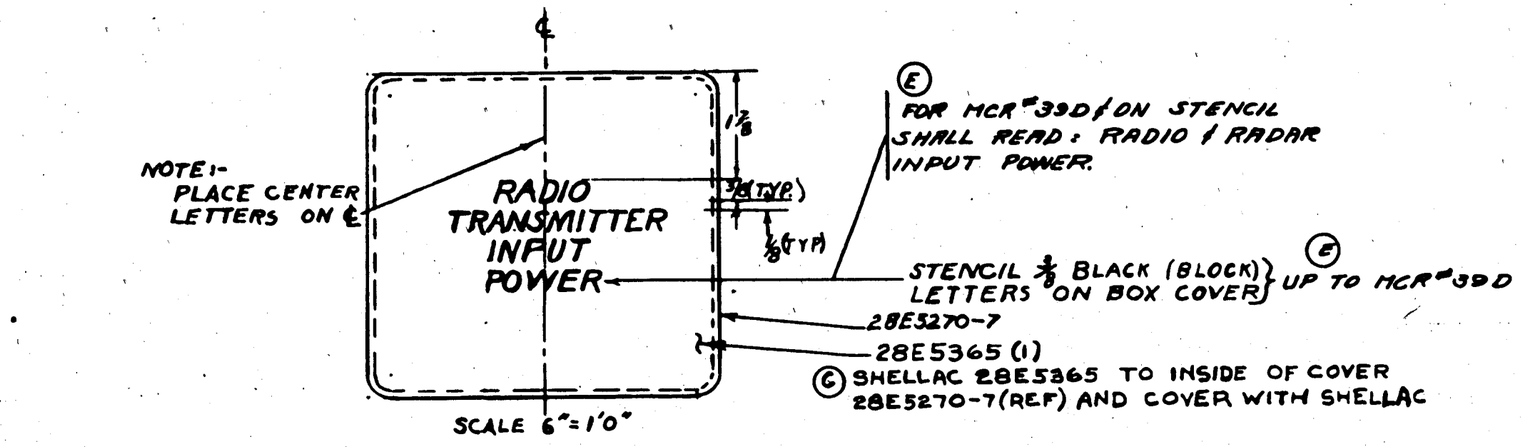

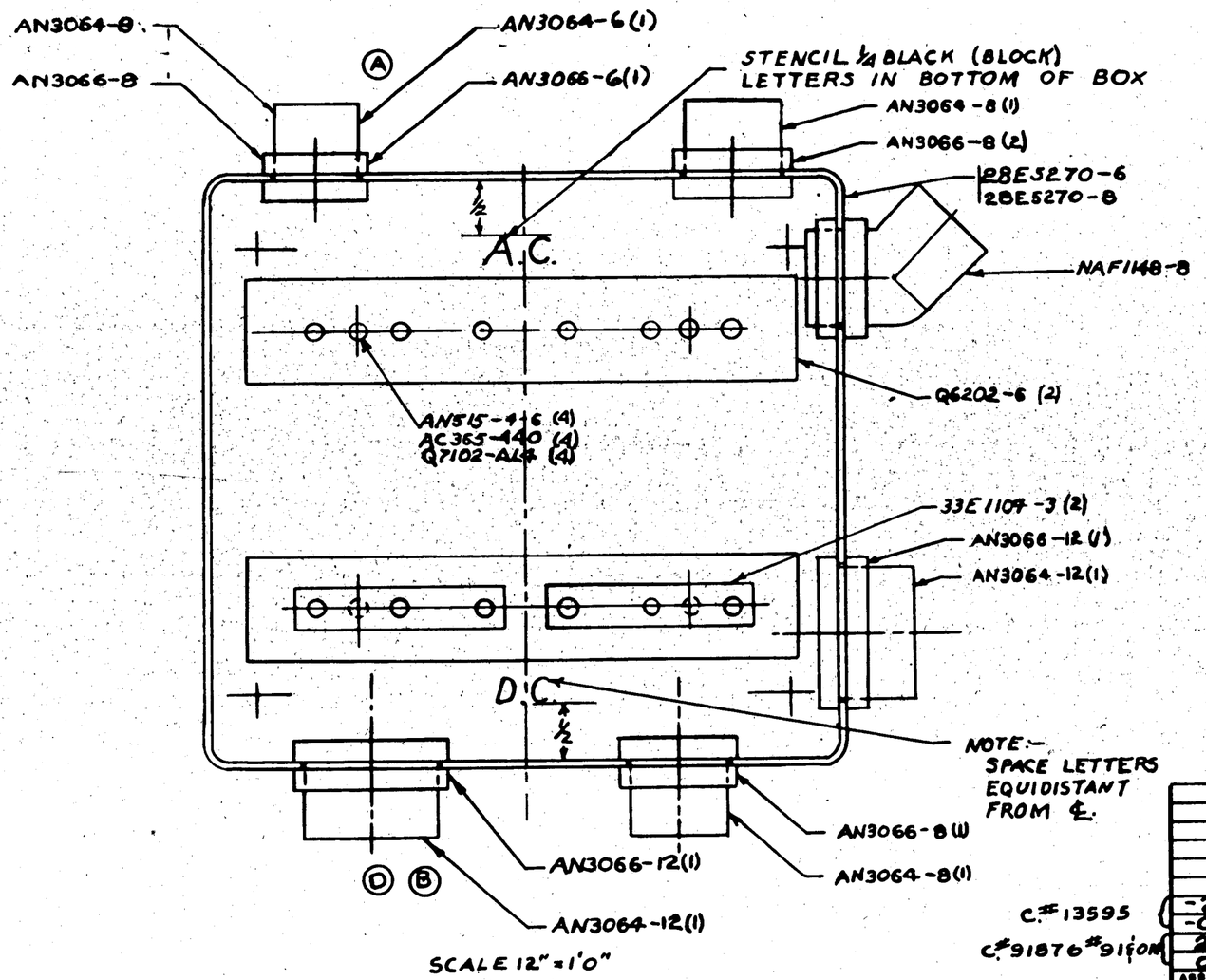

LET	ALTERATION	DATE	BY
A	AN3064-6(1) & AN3066-6(1)		
	REPLACES AN3064-12(1) &		
	AN3066-12(1), WT. CH'G. NEG	10-12-42	HUNTER
B	AN3064-6(1) & AN3066-6(1)		
	REPLACES AN3064-12(1) &		
	AN3066-12(1), WT. CH'G. NEG.	10-12-42	HUNTER
C	ADDED "28E5365" & NOTE:		
	"SHELLAC---SHELLAC" WT. CH'G. NEG.	12-31-42	HOBBING
D	AN3064-12(1) WAS AN3064-6		
	(1) & AN3066-12(1) WAS		
	AN3066-6(1) WT. CH'G. NEG.	1-29-43	MOE
E	ADDED NOTE "FOR --- POWER"		
	& LIMITED NOTE "STENCIL ---		
	COVER" "UP TO MCR #390".		
	NO WT. CHG.	9/6/43	Wright
F	ADDED LIMITS TO AN3064-6		
	AN3066-6 & 28E5270-6, AN		
	3064-8(3) & AN3066-8(4) #1614		
	& ON WERE AN3064-8(2) & AN		
	3066-8(3) ADD 28E5270-8		
	WT. CHG. NEG.	10-2-43	

E.O. A62813

E.O. A62887

& E.O. A89420 89-18

E.O. A98444

MCR #390

ASSY. DASH NO.	MODEL	NEXT ASSY.	QTY.
-2	PBY-5A	28E5274	1
-0	PBY-5A	28E5274	1
2	PBY-5	28E5274	1
0	PBY-5	28E5274	1

C.# 13595
C.# 91876 #91[illegible]

REQUIREMENTS PER AIRPLANE

REPLACES — L593 CALC. WT.

REPLACED BY — ASY. WT.

SCALE NOTED

STAMP PART NUMBER WHERE SHOWN

PART NO	STOCK	MATERIAL	SPEC.	LH REQ. -0	RH REQ. -0	LH REQ. -2	RH REQ. -2	LH REQ. -3	RH REQ. -3	LH REQ. -4	RH REQ. -4	LH REQ. -5	RH REQ. -5
NAF1148-8													
AN3066-6	#1514 TO #1613 (PBY5A)												
AN3066-6													
AN3066-8	#1614 & ON (PBY-5A ONLY)												
AN3066-12													
AN3064-8	#1614 & ON (PBY-5A ONLY)												
AN515-4-6													
AN3064-6	#1514 TO #1613 (PBY-5A)												
AC365-440													
28E5365													
Q7102-AL4													
Q6202-6													
28E5270-6 & 28E5270-8	#1614 & ON (PBY-5A ONLY)												
33E1104-3													
28E5270-7													
28E5270-8	#1514 TO #1613 (PBY5A)												

PARTS LIST PER ASSY.

AC — NAVY — HEAT TREAT

FINISH ON DETAIL — FINISH

G.C. FRENCH 9/7/42 — DRAFT

CHECK — STRUCT — MAT — APPROV — ENG

NAME BOX ASS'Y - ELEC - RADIO POWER JUNCTION

OPP. HAND

DWG. D SIZE 28E5271

CONSOLIDATED AIRCRAFT CORP. SAN DIEGO, CALIF.

R 14[illegible]

LET	ALTERATION	DATE	BY

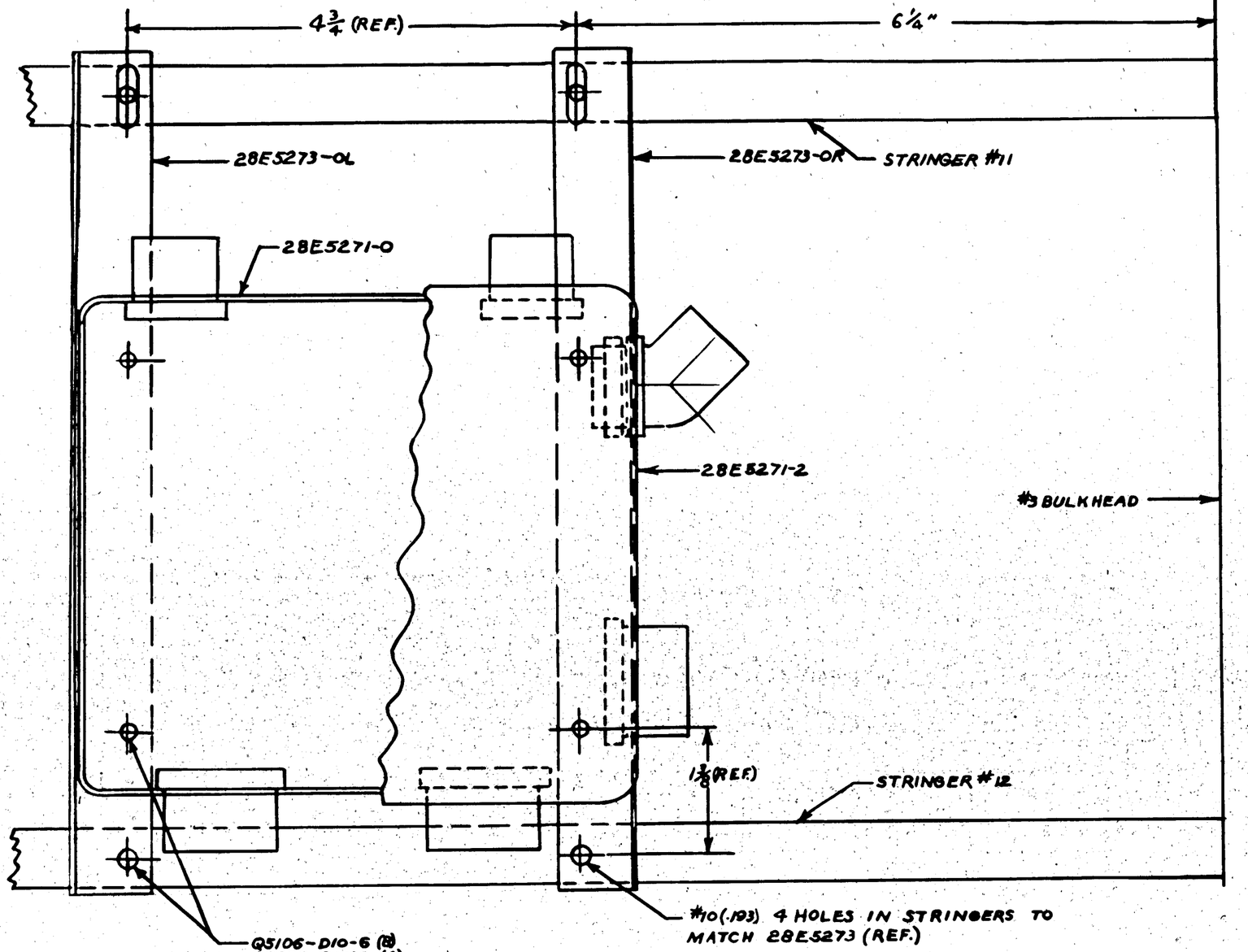

LOOKING OUTBOARD
STARBOARD SIDE
FROM ℄ OF SHIP

CONT.#91876
SHIPS#91ℓON

ASSY. DASH NO.	MODEL	NEXT ASSY.	REQ.
	PBY-5	28E1012	1

REQUIREMENTS PER AIRPLANE

REPLACES — CALC. WT. 1.868

REPLACED BY — ASSY. WT.

UNLESS OTHERWISE SPECIFIED DIMENSIONS ARE IN INCHES AND TOLERANCES ± 1/32

SCALE 12" 1'0"

STAMP PART NUMBER WHERE SHOWN

PART No.	STOCK	MATERIAL	SPEC.	LH REQ.	RH REQ.	LH REQ.	RH REQ.	LH REQ.	RH REQ.	LH REQ.	RH REQ.	LH REQ.	RH REQ.
PARTS LIST PER ASSY.				-0		-2		-3		-4		-5	
AC365-D1032													4
Q5106-D10-6													8
28E5273-0L													1
28E5273-0R													1
28E5271-2													1
28E5271-0													1
-6													

AC		Q.C.						
NAVY		FRENCH	Comm					
HEAT TREAT	FINISH	9/9/42	DRAFT	CHECK	STRUCT	MAT	APPROV	ENG.

NAME INSTALL-ELEC-RADIO POWER JUNCTION BOX

OPP. HAND

CONSOLIDATED AIRCRAFT CORP. SAN DIEGO, CALIF.

DWG. SIZE D

28E5274

R 1 12

E.O. 90102 A
MCR. 32-19
E.O. A93530
MCR. 32-6
E.O. A96169
MCR. 23-22

LET	ALTERATION	DATE	BY
A	CREATED - 2 ASSY NO WT. CHG.	12-2-42	ROSS
B	REMOVED 25/32 DIA. HOLES (2) ON -6 BOX & (2) ON -8 BOX. NEG. WT. CHG.	12-21-42	ROSS
C	ADDED 1/4" D. HOLE IN -8 ONLY. WT. CHG. NEG.	1-15-43	ROSS

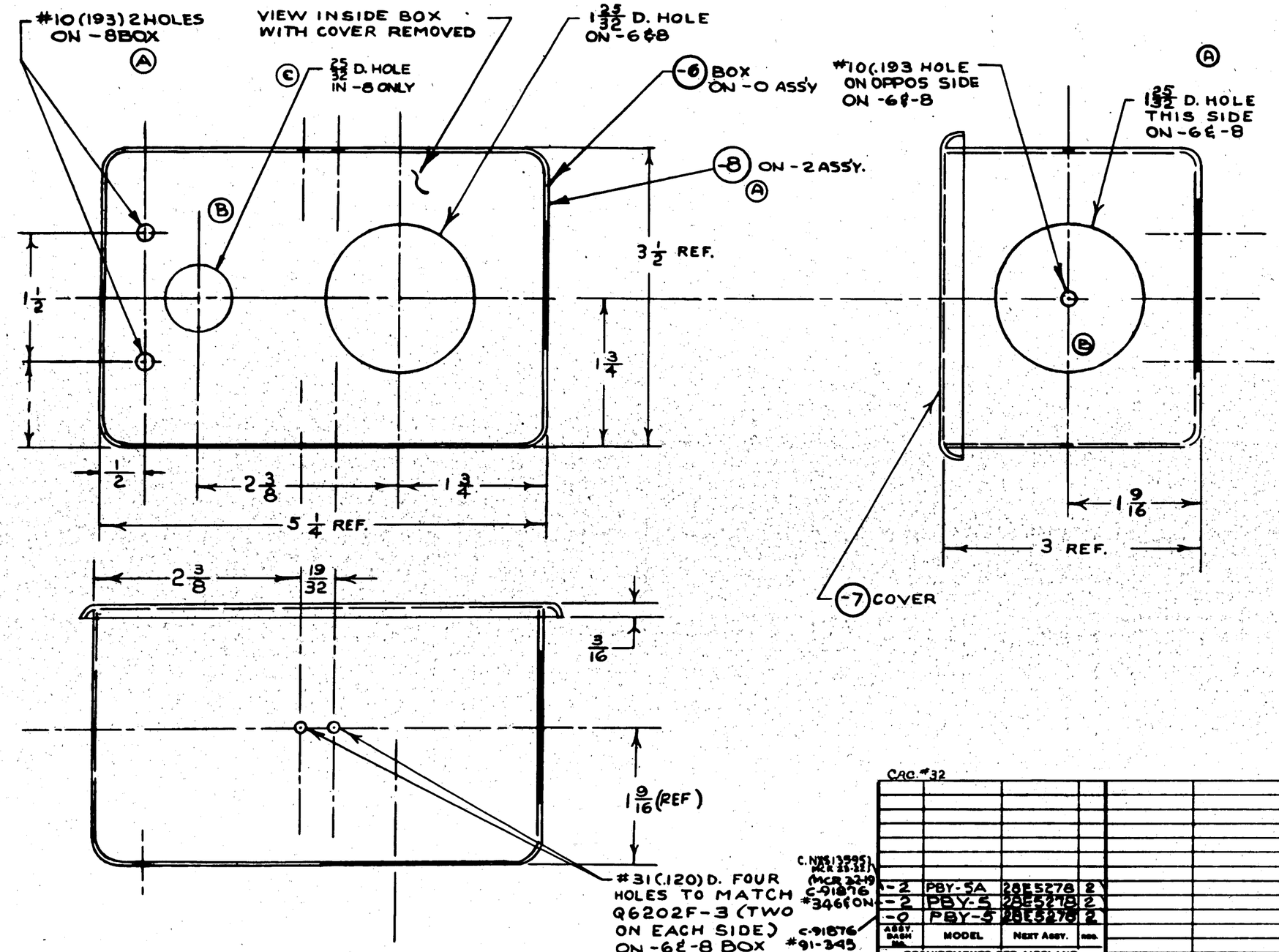

NOTES:
1. FINISH — P-INSIDE; P-GP OUTSIDE
2. REMOVE FINISH 3/32 RADIALLY AROUND HOLES.
3. BOX & COVER MAY BE PURCHASED FROM POULSEN & NARDON.
. #1205-300 BOX. 1205-35D COVER

CAC. #32

ASSY. DASH NO.	MODEL	NEXT ASSY.	REQ'D
-2	PBY-5A	28E5278	2
-2	PBY-5	28E5278	2
-0	PBY-5	28E5278	2

REQUIREMENTS PER AIRPLANE

REPLACES — A418 CALC. WT.
REPLACED BY — ACT. WT.
UNLESS OTHERWISE SPECIFIED DIMENSIONS APPLY AFTER FINISH — SCALE 12" = 1' 0"
± 1/32
STAMP PART NUMBER WHERE SHOWN

PART NO	STOCK	MATERIAL	SPEC.	LH REQ.	RH REQ.	LH REQ.	RH REQ.	LH REQ.	RH REQ.	LH REQ.	RH REQ.	LH REQ.	RH REQ.
PARTS LIST PER ASSY.				-0		-2		-3		-4		-5	
-8						2							
-7	COVER } C.A.C. #38-300N			2		2							
-6	BOX }			2									

AC / NAVY	HEAT TREAT	FINISH	DRAFT	CHECK	STRUCT	MAT	APPROV	ENG.
	SEE NOTE #1.	JCHIEN 9/9/42						

NAME BOX — ELEC. FUSING INDICATOR SW. JUNCTION
CONSOLIDATED AIRCRAFT CORP. SAN DIEGO, CALIF.
OPP. HAND
SIZE D
28E5276
R

LET	ALTERATION	DATE	BY
A	IN -0 ASSY AN345-10(1) WAS AC335-10(1) NO WT. CHG.	12-23-42	GUBER NICK
B	CREATED -2 ASSY. LIMITED -0 ASSY TO #91-345, WT. CHG. NEG.	12-22-42	GUBER NICK
C	CREATED -0R ASSY. ADDED 28E5366-8 TO -0L ASSY & NOTE "SHELLAC---SHELLAC" REV. REQ'TS/AIRPL. WT. CHG. NEG.	12-22-42	GUBER NICK
D	REM. AN3066-6(2) & AN3064-6 (2) FROM -2 ASSY. WT. CHG. NEG.	1-22-43	GUBER NICK
E	28E5395-6 & -7 WERE 28E5366-6 & -7, CANC. -2 ASSY PER C.O. WT. CHG. NEG.	4-30-43	BENNER

E.O.* A 64147

E.O.* A 90103A CHG. 82-19

E.O.* A 90341 CHG. 89-18

E.O. A 92734 CAC 32-6

E.O. A 96170 M.C.R. 23-22

AN 3064-20
AN 3066-20
ON -0 & -2 ASSY

AN520-10-19 (1)
Q7102 AL10 (2)
AN345-10 (1)
AN935-10 (1)
AC365-1032(1)
ON -0 & -2 ASSY

(A)

(B)

(D)

NAF1149-20
AN3066-20
ON -2 ASSY

(B)

28E5276-0
(FOR -0 ASSY)

(E)

Q6202F-3 (2)
AN515-9-6 (4)
AC365-440 (4)
Q7102-AL4 (4)
ON -0 & -2 ASSY

C-91876-#91-345
MCR 89-18

(C)

NOTE:
SHELLAC 28E5395-6 & -7 TO INSIDE OF BOX COVERS ON -0 ASSY'S RESPECT. & COVER WITH SHELLAC.

(E)

ASSY. DASH No.	MODEL	NEXT ASSY.	REQ.
-0R	PBY-5	28E5277	1
-0L	PBY-5	28E5277	1

REQUIREMENTS PER AIRPLANE

REPLACES

REPLACED BY

.738 CALC. WT.

ACT. WT.

SCALE 12" = 1'0"

± 1/32

STAMP PART NUMBER WHERE SHOWN

PART No.	STOCK	MATERIAL	SPEC.	LH REQ. -0	RH REQ. -2	LH REQ. -3	RH REQ. -4	LH REQ. -5	RH REQ.
28E5395-7					1				
28E5395-6						1			
NAF1149-20				1	1	1	1	1	1
28E5276-2				1					
AN345-10				1	1	1	1	1	1
Q7102-AL10				2	2	2	2	2	2
Q6202F-3				2	2	2	2	2	2
Q7102-AL4				4	4	4	4	4	4
AC365-1032				1	1	1	1	1	1
AC365-440				4	4	4	4	4	4
AN520-10-19				1	1	1	1	1	1
AN515-9-6				4	4	4	4	4	4
AN3066-20				1	1	1	1	1	1
AN3064-20				1	1	1	1	1	1
AN935-10				1	1	1	1	1	1
28E5276-0 -8				1	1	1	1	1	1

PARTS LIST PER ASSY.

A.C.		KING	MATERIAL					
NAVY NONE	NONE	9-9-42						
HEAT TREAT	FINISH	DRAFT	CHECK	STRUCT	MAT	APPROV	ENG.	

NAME BOX ASSY -ELECT- FUSING SW. JUNCTION

OPP. HAND

CONSOLIDATED AIRCRAFT CORP. SAN DIEGO, CALIF.

DWG. D SIZE 28E5278

R

LET	ALTERATION	DATE	BY

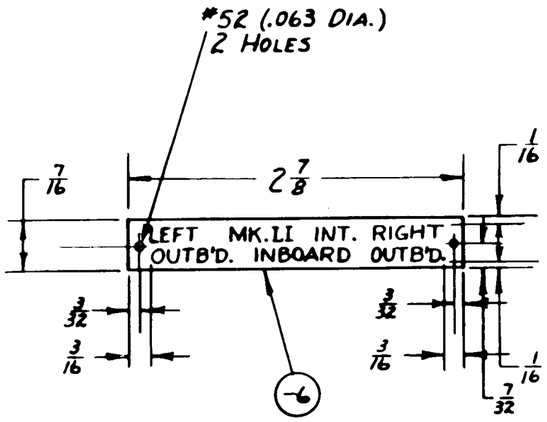

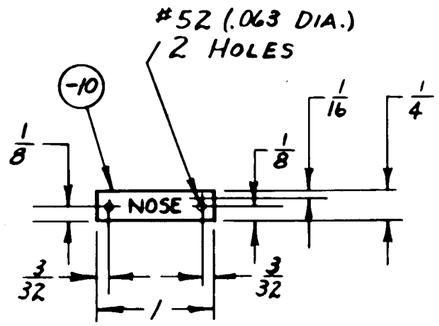

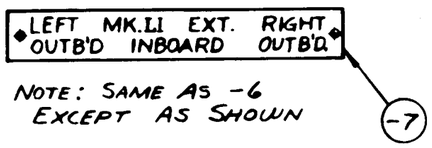

NOTE: SAME AS -6 EXCEPT AS SHOWN

NOTE: SAME AS -10 EXCEPT AS SHOWN.

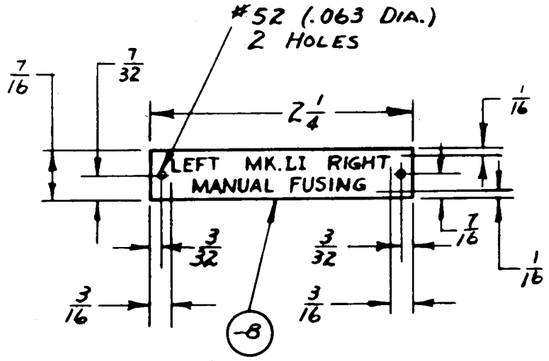

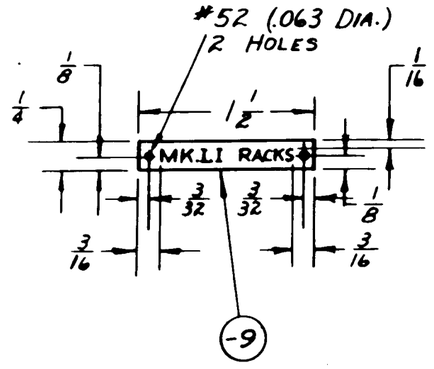

NOTE:

MATERIAL TO BE 1/32 OR 1/16 COMMERCIAL GRADE RED FIBRE AT VENDORS DISCRETION. BOTH SIDES COATED AFTER SCREENING OR LITHOGRAPHING WITH ANDREW BROWN CO. #L-60 WATERPROOF SEALER OR EQUIVALENT.

LETTERING TO BE 1/8 HIGH WITH 1/16 BETWEEN LINES. LETTERING TO BE WHITE ON A DULL BLACK BACKGROUND.

WHEN "F" FOLLOWS PART NUMBER LETTERS ARE TO BE RECESSED & FILLED WITH PALE GREEN FLOURESCENT LACQUER (#10 U.S. RADIUM CO. OR EQUIV.) BACKGROUND DULL BLACK.

WEIGHT	
-6	.002
-7	.002
-8	.0016
-9	.0006
-10	.0004
-11	.0004

PURCHASE TO DWG.

ASSY DASH NO.	MODEL	NEXT ASSY.	QTY
-11F	PBY-5	28F1113	1
-10F			1
-9F			1
-8F			1
-7F			1
-6F	PBY-5	28F1113	1

REQUIREMENTS PER AIRPLANE

REPLACES — NOTED — CALC WT.

REPLACED BY — ACT. WT.

UNLESS OTHERWISE SPECIFIED ± 1/32 — SCALE 12" = 1'-0"

STAMP PART NUMBER WHERE SHOWN

PART NO	STOCK	MATERIAL	SPEC.	LH REQ.	RH REQ.	LH REQ.	RH REQ.	LH REQ.	RH REQ.	LH REQ.	RH REQ.	LH REQ.	RH REQ.
-11	NOTED	RED FIBRE	COMMERCIAL										
-10													
-9													
-8													
-7													
-6	NOTED	RED FIBRE	COMMERCIAL										
		PARTS LIST PER ASSY.		-0		-2		-3		-4		-5	

AC —
NAVY NONE — HEAT TREAT
NOTED — FINISH

9-11-42 KATHLIN
NORMAN BOLANDER 9-10-42

DRAFT | CHECK | STRUCT | MAT | APPROV | ENG.

NAME NAMEPLATE -ELEC- BOMBER'S SWITCH PANEL

OPP. HAND

CONSOLIDATED AIRCRAFT CORP. SAN DIEGO, CALIF.

DWG. SIZE D

28E5279

R

PBY-5 CONT. 91876 #91 & ON.

MCR #164-1-2 EO A 95687
EO B 8497 MCR 89-7

LET	ALTERATION	DATE	BY
A	CREATED -2 ASSY. (WT. CH. NR)	2-17-43	DISS MD
B	NAF1150-6AB-48 TYPE 2 (3)		
	WAS NAF1150-6AB-48(3) (WT. CH. NR)	2-17-43	DISS MD

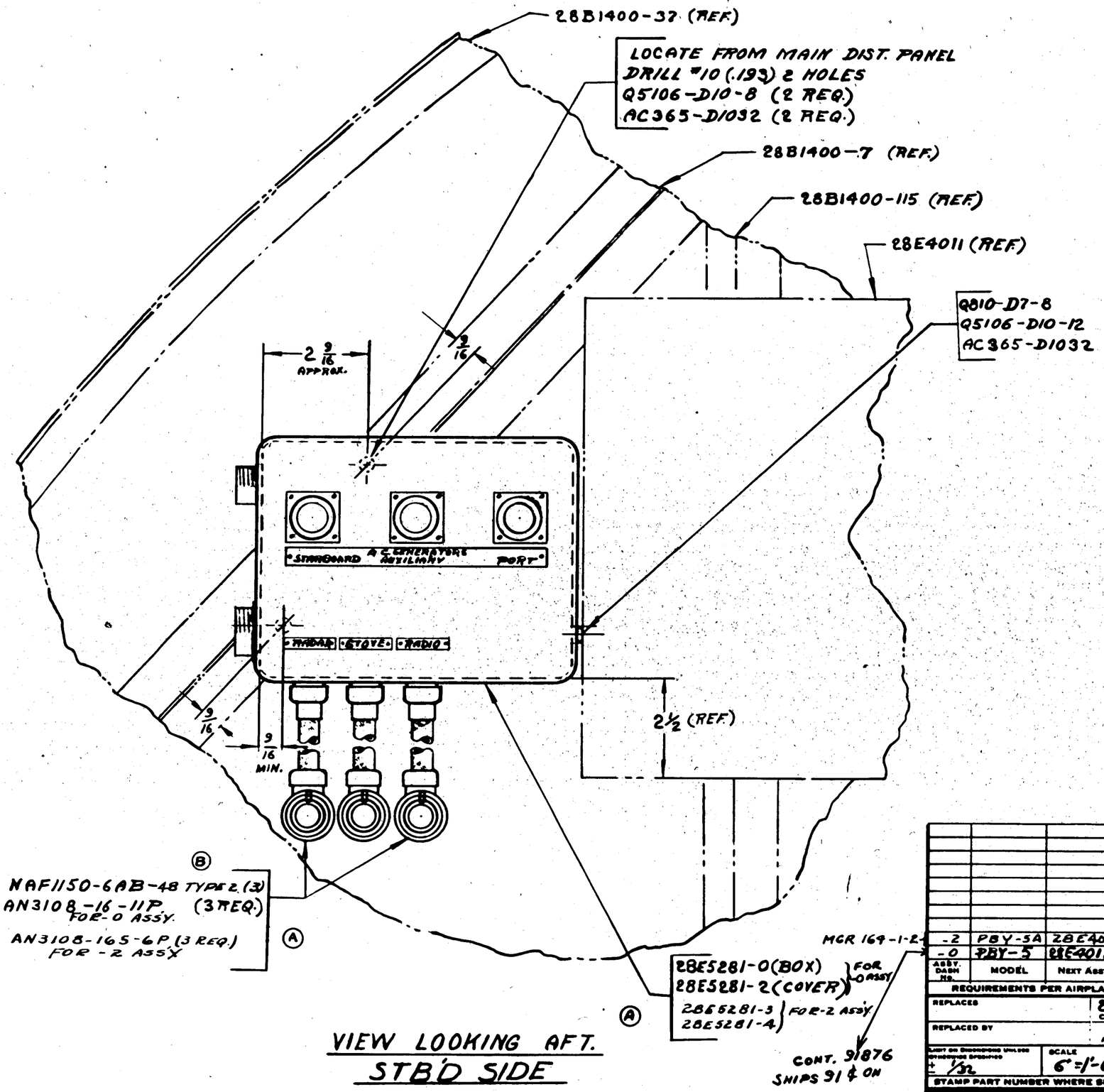

VIEW LOOKING AFT.
STB'D SIDE

ABBY. DASH NO.	MODEL	NEXT ASSY.	REQ.
-2	PBY-5A	28E4018	1
-0	PBY-5	28E4018	1

REQUIREMENTS PER AIRPLANE

REPLACES

REPLACED BY

2.7 CALC WT.

ACT. WT.

SCALE 6" = 1'-0"

± 1/32

STAMP PART NUMBER WHERE SHOWN

PART No	STOCK	MATERIAL	SPEC.	LH REQ. -0	RH REQ. -0	LH REQ. -2	RH REQ. -2	LH REQ. -3	RH REQ. -3	LH REQ. -4	RH REQ. -4	LH REQ. -5	RH REQ. -5
NAF1150-6AB-48 (TYPE 2)						3	3						
AN3108-165-6P							3						
AN3108-16-11P						3							
AC365-D1032						3	3						
Q5106-D10-12				1	1								
Q5106-D10-8				2	2								
Q810-D7-8				1	1								
28E5281-4					1		1						
28E5281-3					1		1						
28E5281-2				1		1							
28E5281-0				1		1							

PARTS LIST PER ASSY.

A.C.		KELECHAS		
NAVY	—	9-16-42		
HEAT TREAT	FINISH	DRAFT	CHECK	STRUCT. MAT APPROV ENG.

NAME INSTALL. - ELEC. - A.C. POWER JUNCTION BOX

OPP. HAND —

CONSOLIDATED AIRCRAFT CORP. OF SAN DIEGO, CALIF.

DWG. SIZE D

28E5282

R

LET			

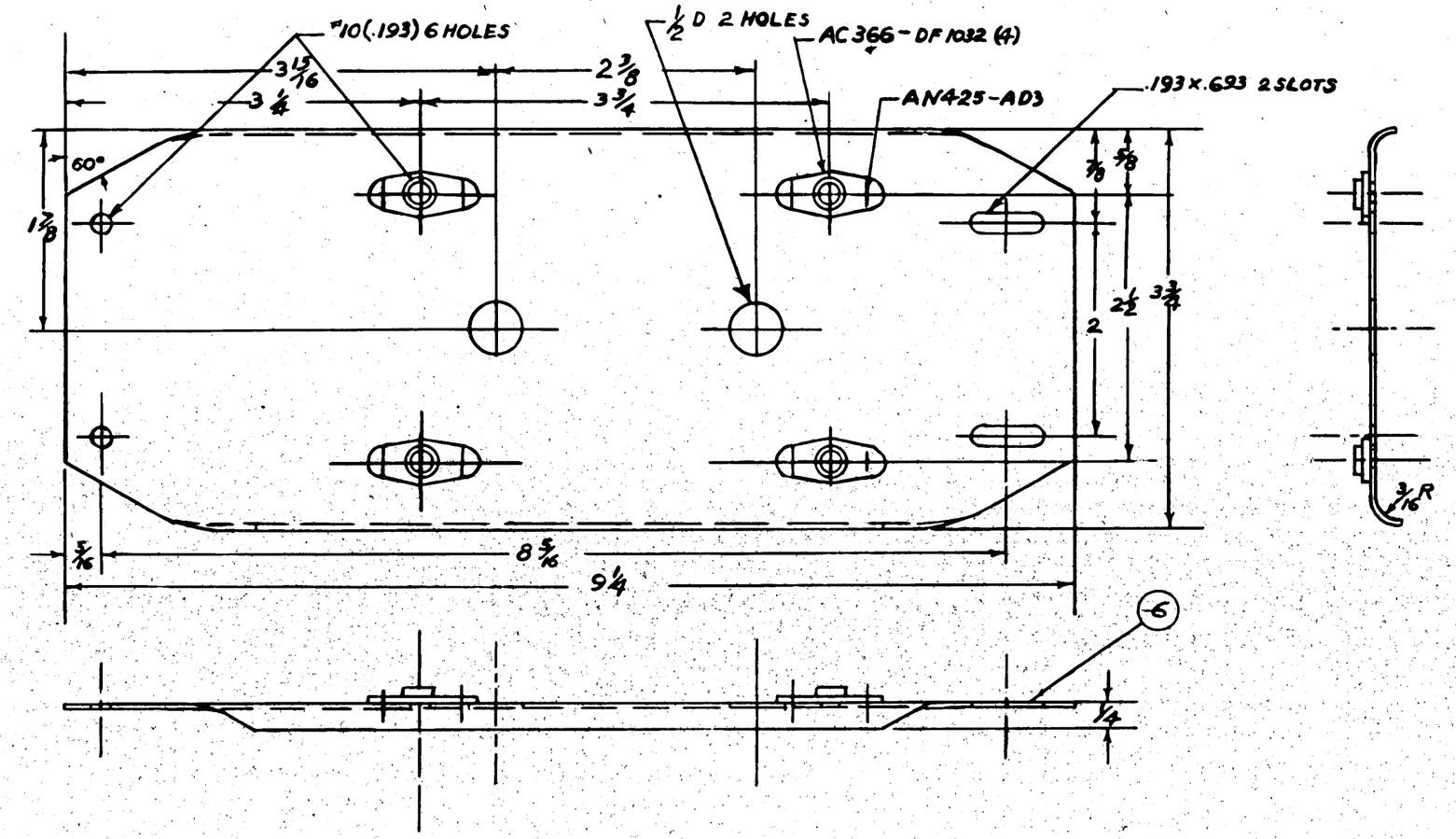

CONT. #91876
SHIPS #914 ON

ASSY. DASH NO.	MODEL	NEXT ASSY.	REQ.
	PBY-5	28E5287	1

REQUIREMENTS PER AIRPLANE

REPLACES	.152 CALC. WT.
REPLACED BY	ACT. WT.
UNLESS OTHERWISE SPECIFIED ± 1/32	SCALE 12" = 1'0"

STAMP PART NUMBER WHERE SHOWN

AC366-DF1032
AN425-AD3

PART NO.	STOCK	MATERIAL	SPEC.	LH REQ.	RH REQ.	LH REQ.	RH REQ.	LH REQ.	RH REQ.	LH REQ.	RH REQ.	LH REQ.	RH REQ.
				-0		-2		-3		-4		-5	
-6	9 5/8 x 1/4 x .040	24ST AlC 47AB-T		1									

PARTS LIST PER ASSY.

A.C.		G.C. FRENCH	Gregson						
NAVY	Z-P-GP	9/14/42							
HEAT TREAT	FINISH	DRAFT	CHECK	STRUCT	MAT	APPROV	ENG.		

NAME SUPPORT-ELEC. - A.C. AUX. POWER UNIT BOX

OPP. HAND

CONSOLIDATED AIRCRAFT CORP. SAN DIEGO, CALIF.

DWG. SIZE D

28E5288

R

LET	ALTERATION	DATE	BY

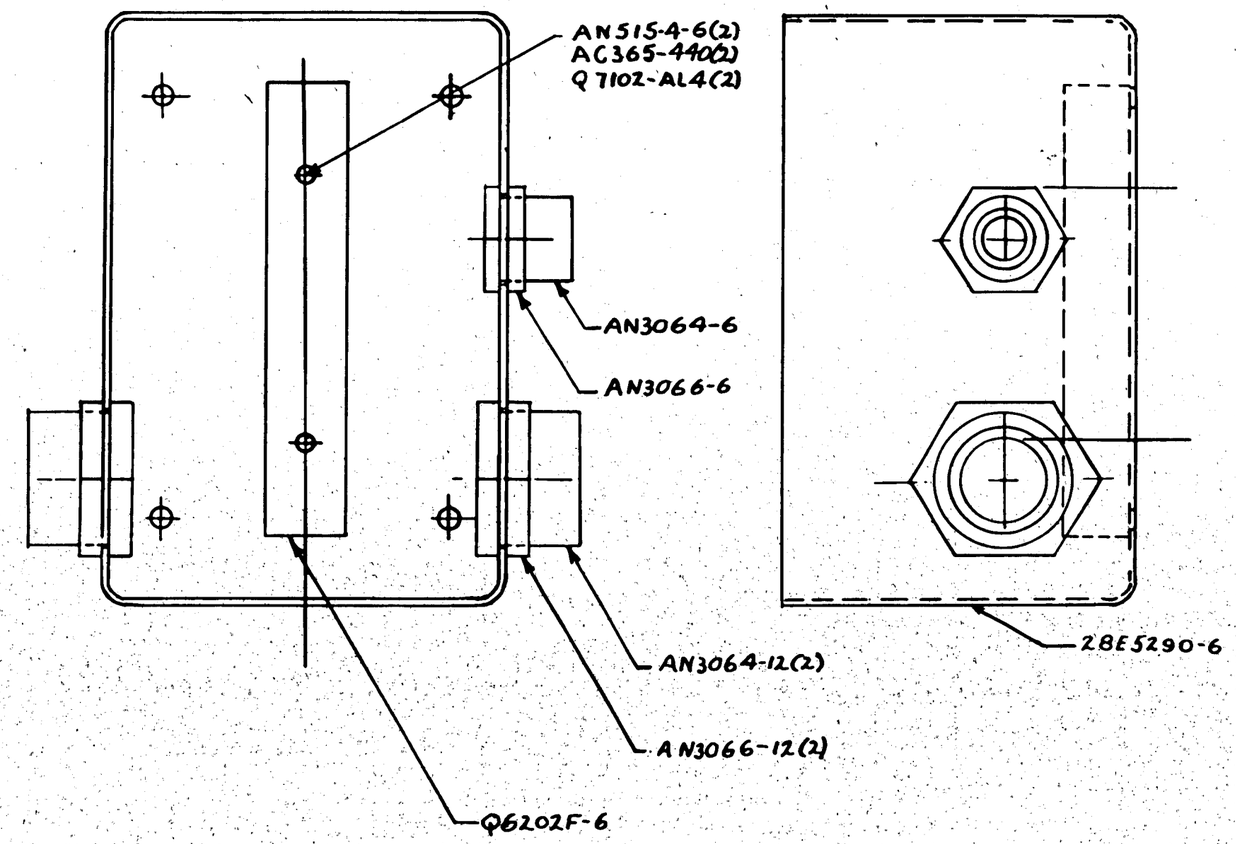

CONT.#91876
SHIPS#9140N

PART No	STOCK	MATERIAL	SPEC.	LH REQ.	RH REQ.	LH REQ.	RH REQ.	LH REQ.	RH REQ.	LH REQ.	RH REQ.	LH REQ.	RH REQ.
		PARTS LIST PER ASSY.		-0		-2		-3		-4		-5	
AC365-440				2									
AN3066-12						2							
AN3066-6						1							
AN3064-12						2							
AN3064-6						1							
AN515-4-6						2							
Q6202F-6						1							
Q7102-AL4						2							
28E5290-6						1							

ASSY. DASH No.	MODEL	NEXT ASSY.	QTY.
	PBY-5	28E5287	1

REQUIREMENTS PER AIRPLANE

REPLACES — CALC. WT. .584

REPLACED BY — ACT. WT.

LIGHT ON DRAWINGS UNLESS OTHERWISE SPECIFIED + 1/32

SCALE 12" = 1'0"

STAMP PART NUMBER WHERE SHOWN

AC		C.C. FRENCH	9/11/42						
NAVY	FINISH ON DETAIL								
HEAT TREAT	FINISH	DRAFT	CHECK	STRUCT	MAT	APPROV	ENG		

NAME BOX ASS'Y - ELEC - A.C. AUX. POWER UNIT

CONSOLIDATED AIRCRAFT CORP. SAN DIEGO, CALIF.

OPP. HAND

DWG. SIZE D

28E5289

R9 1942

E.O.# 89643

LET.	ALTERATION	DATE	BY
A	ADDED 28E5369 (1) & NOTE		
	"SHELLAC --- SHELLAC." WT CHG. NEC	12-23-92	[illegible]

(A) 28E5369

NOTE:
SHELLAC 28E5369 TO INSIDE OF BOX COVER 28E5290-7(REF.) AND COVER WITH SHELLAC.

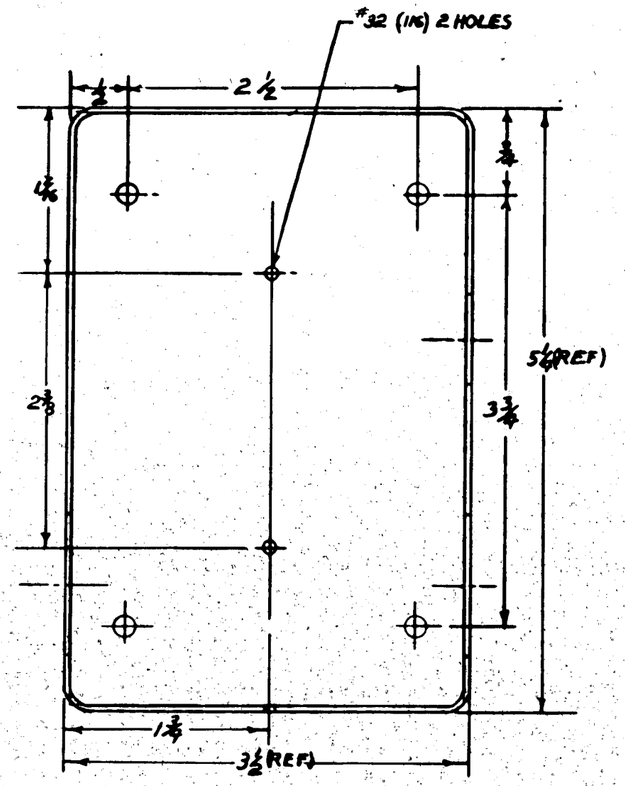

FRONT VIEW
COVER REMOVED

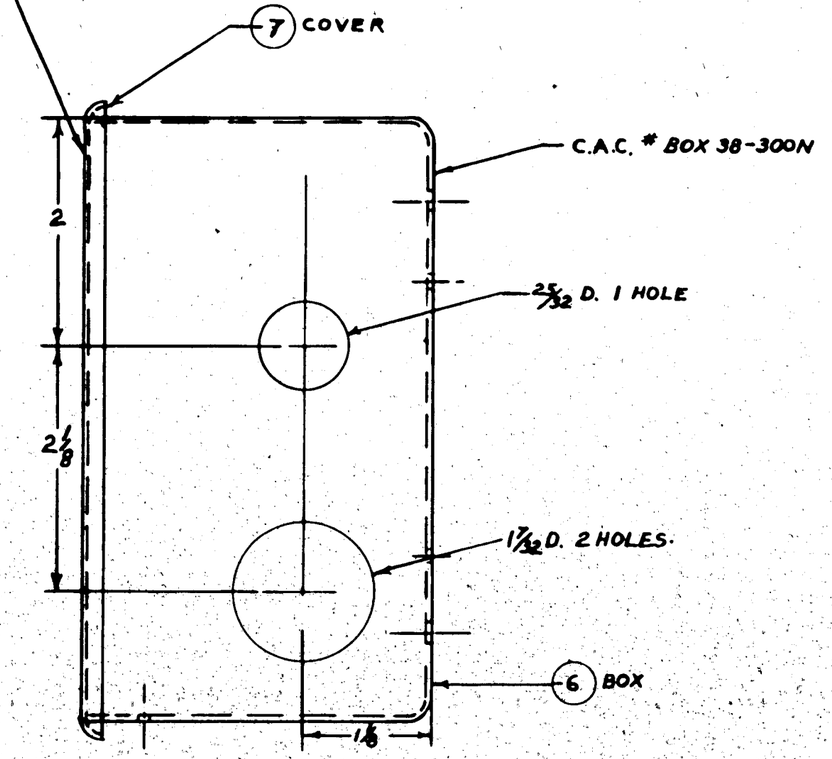

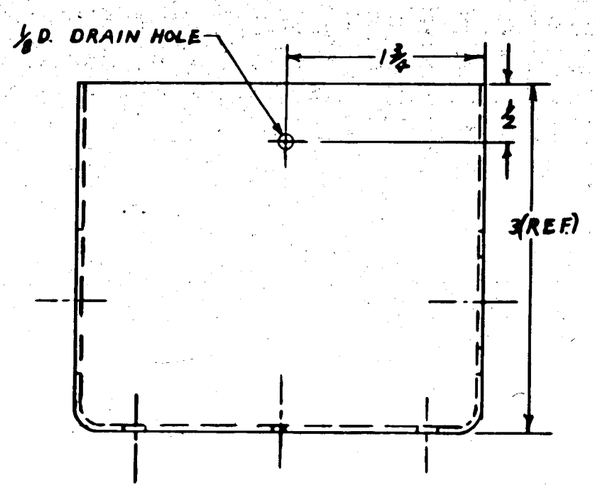

CONT. # 91876
SHIPS # 91 & ON

NOTE:-
-6 & -7 MAY BE PURCHASED FROM POULSEN & NARDON. BOX # 1205-300N COVER # 1205-350

-7	PBY-5	28E5287	1
-6	PBY-5	28E5289	1
ASSY. SASH No.	MODEL	NEXT ASSY.	REQ.

REQUIREMENTS PER AIRPLANE

REPLACES .355 GALS. WT.
REPLACED BY ADD. WT.
SCALE 12" = 1'0"
± 1/32
STAMP PART NUMBER WHERE SHOWN

28E5369 (SEE PAGE)
-7 }
-6 } C.A.C. # BOX 38-300N

PART No.	STOCK	MATERIAL	SPEC.	LH REQ. -0	RH REQ. -0	LH REQ. -2	RH REQ. -2	LH REQ. -3	RH REQ. -3	LH REQ. -4	RH REQ. -4	LH REQ. -5	RH REQ. -5

PARTS LIST PER ASSY.

AC
NAVY
HEAT TREAT

F-INSIDE
F-OP-OUTSIDE
FINISH

G.C. FRENCH 12-15-42 — DRAFT
9120 11-16-42 — CHECK
1-21-43 — STRUCT
2-1-43 — MAT
2-3-43 — APPROV
2-3-43 — ENG

NAME BOX-ELEC.-A.C.
AUX. POWER UNIT
CONSOLIDATED AIRCRAFT CORP. San Diego, Calif.

OPP HAND
DWG. SIZE D
28E5290

R

E.O. B2780

LET	ALTERATION	DATE	BY
A	CREATED A-2 ASS'Y IDENTICAL TO -0L ASS'Y EXCEPT THAT 28E6058-5(1) REPLACES 28E6058-0(1)	3-24-[illegible]	

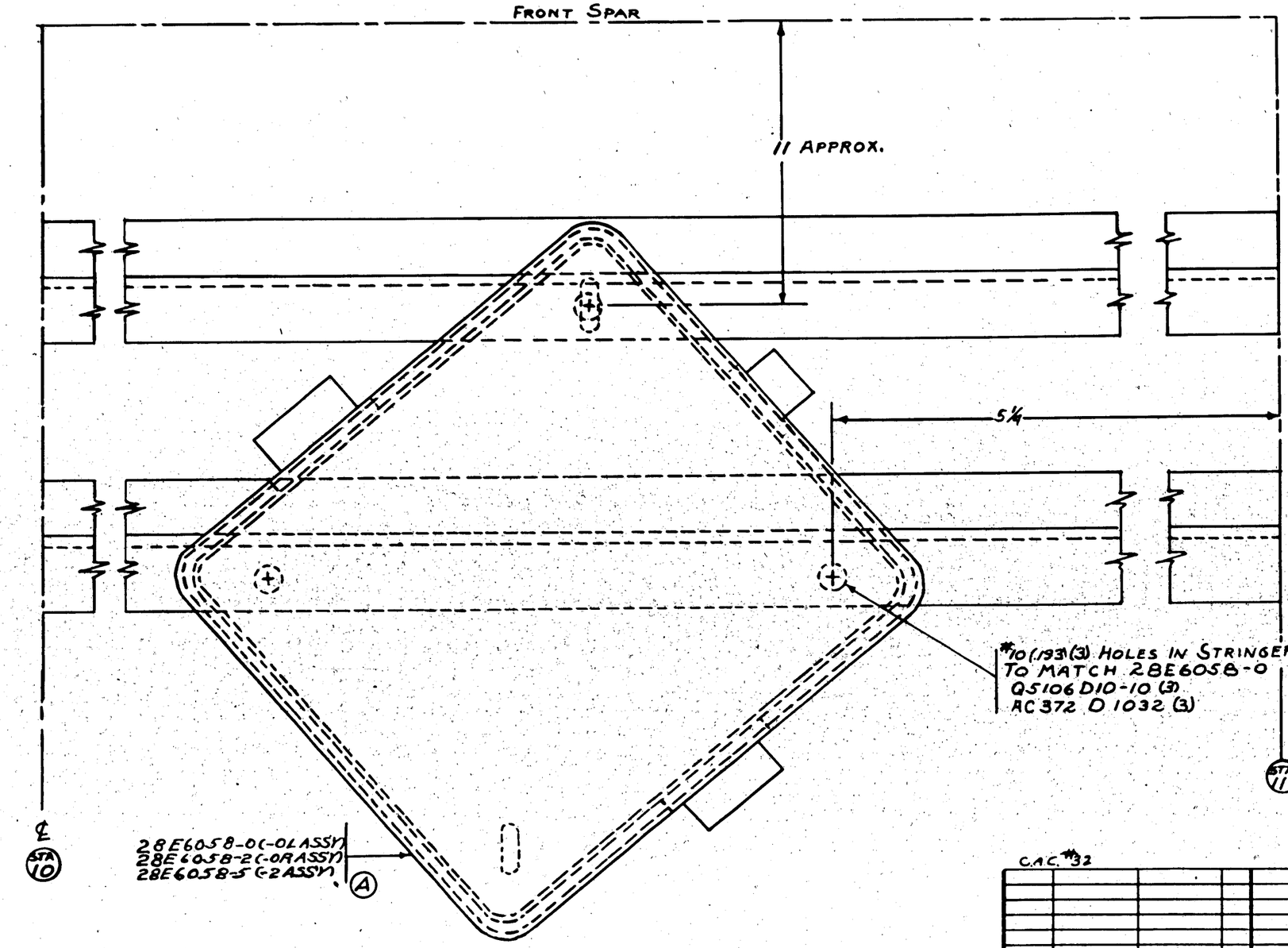

VIEW LOOKING UP INSIDE OF CENTER SECTION - PORT SIDE BETWEEN BLKHD'S #10 & #11

C.A.C. #32

M.C.R. #219 { -2 PBY-5A 28E5265 1 ; -R PBY-5A 28E5265 1 }
CONT. 91876 #31 ON { OR PBY-5 28E5265 1 ; 0L PBY-5 28E5265 1 }

ASSY. DASH NO.	MODEL	NEXT ASSY.	REQ.
REQUIREMENTS PER AIRPLANE			
REPLACES			.880 CALC. WT.
REPLACED BY			ACT. WT.
UNLESS OTHERWISE SPECIFIED ± 1/32		SCALE 12" = 1'0"	
STAMP PART NUMBER WHERE SHOWN			

PART No.	STOCK	MATERIAL	SPEC.	LH REQ.	RH REQ.	LH REQ.	RH REQ.	LH REQ.	RH REQ.	LH REQ.	RH REQ.	LH REQ.	RH REQ.
PARTS LIST PER ASSY.				-0		-2		-3		-4		-5	
Q5106D10-10				3	3	3							
AC372 D1032				3	3	3							
28E6058-5						1							
28E6058-2					1								
28E6058-0				1									
-6													

A C		KING	
NAVY NONE	NONE	9/9/42	
HEAT TREAT	FINISH	DRAFT	CHECK / STRUCT / MAT / APPROV / ENG

NAME INSTALLATION - ELEC - BOX OUTER PANEL JUNCTION

OPP. HAND 28E5291-R

CONSOLIDATED AIRCRAFT CORP. SAN DIEGO, CALIF.

SIZE D

28E5291

R 2/12

Eng. 64216

LET	ALTERATION	DATE	BY
A	DIM 1.25 WAS 2.50, NO WT. CHG.		

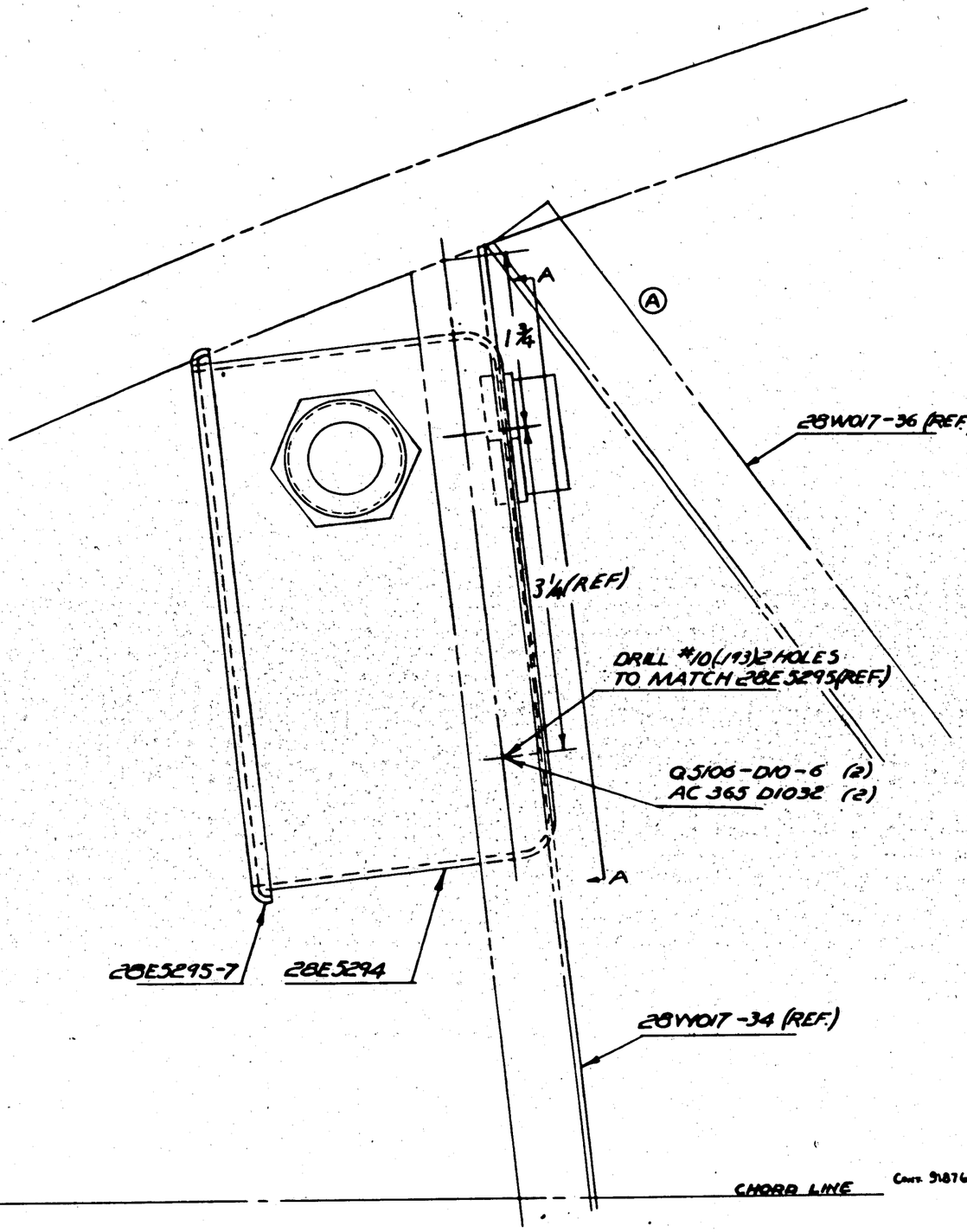

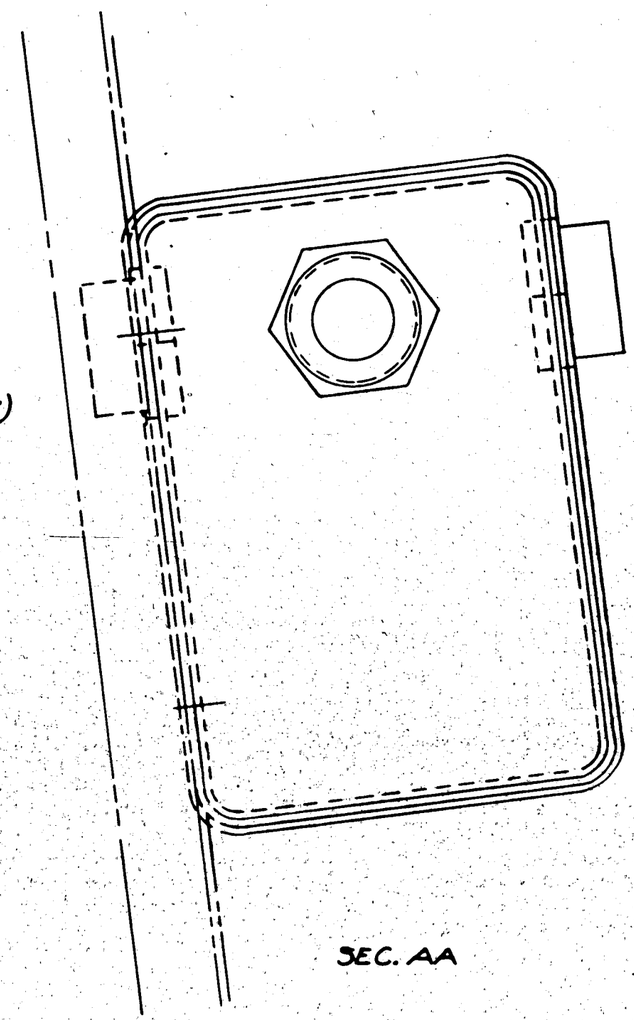

SEC. AA

Cont. 91876 Supp 3604

ASSY. DASH No.	MODEL	NEXT ASSY.	REQ.
	PBY-5	28E4014	1

REQUIREMENTS PER AIRPLANE

REPLACES — Cmpl. Wt.

REPLACED BY — Adv. Wt.

SCALE 12" = 1'-0"

± 1/32

STAMP PART NUMBER WHERE SHOWN

PART No.	STOCK	MATERIAL	SPEC.	LH REQ.	RH REQ.	LH REQ.	RH REQ.	LH REQ.	RH REQ.	LH REQ.	RH REQ.	LH REQ.	RH REQ.
PARTS LIST PER ASSY.				-0		-2		-3		-4		-5	
AC365 D1032				2		2							
Q5106 D10-6				2		2							
28E3295-7				1		1							
28E5294													

AC
NAVY
HEAT TREAT — FINISH — DRAFT — CHECK — STRUCT — MAT — APPROVED

NAME INSTALL-ELEC-WING A.C. JUNCTION BOX

OPP. HAND

CONSOLIDATED AIRCRAFT CORP. W.F. SAN DIEGO, CALIF.

SIZE D

28E52

LET	ALTERATION	DATE	BY

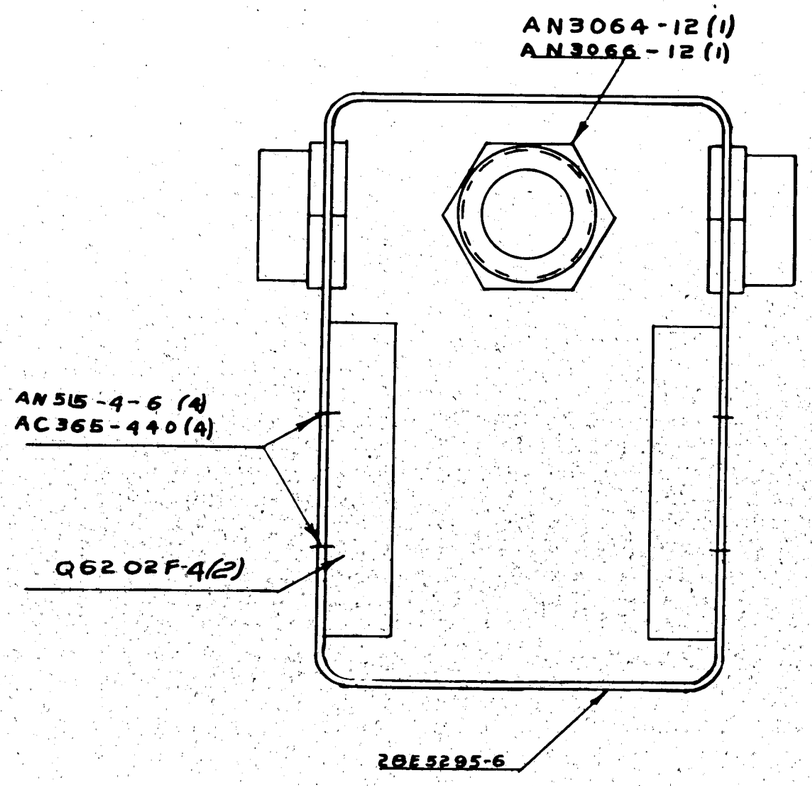

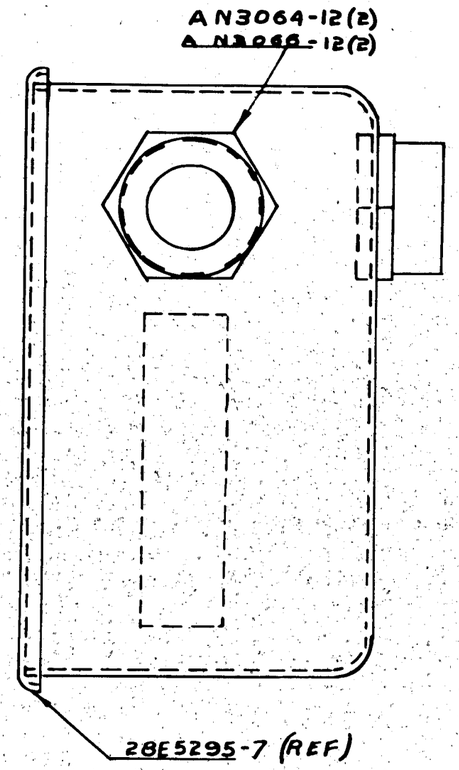

CONT.. 91876 SHIPS 91 & ON

ASSY. DASH NO.	MODEL	NEXT ASSY.	REQ.
	PBY-5	28E5293	1

REQUIREMENTS PER AIRPLANE

REPLACES — CALC. WT.

REPLACED BY — ACT. WT.

ALLOW ON DIMENSIONS UNLESS OTHERWISE SPECIFIED ± 1/32

SCALE 12" = 1'-0"

STAMP PART NUMBER WHERE SHOWN

PART NO	STOCK	MATERIAL	SPEC.	LH REQ. -0	RH REQ. -0	LH REQ. -2	RH REQ. -2	LH REQ. -3	RH REQ. -3	LH REQ. -4	RH REQ. -4	LH REQ. -5	RH REQ. -5
Q6202F4											2		
AC365-440											4		
AN515-4-6											4		
AN3066-12											3		
AN3064-12											3		
28E5295 6											1		

PARTS LIST PER ASSY.

AC / NAVY

HEAT TREAT — FINISH

DRAFT	CHECK	STRUCT	MAT	APPROV	ENG

NAME BOX ASSY. ELEC. WING AC JUNCTION

OPP. HAND

CONSOLIDATED AIRCRAFT CORP. SAN DIEGO, CALIF.

SIZE D — 28E5294

R 9 1942

LET	ALTERATION	DATE	BY
A	ADD DIA. & LETTER LOCATION OF 1" DIA HOLE WT. CHG. NEG	8-31-42	
B	ADDED NOTE-SHELLAC 28E5370 — WITH SHELLAC. ALSO 28E5370 TO FACE & DIM WT. CHG NEG.	8-31-42	

E.O. A6A215

E.O. A90689 (NCR 89-48)

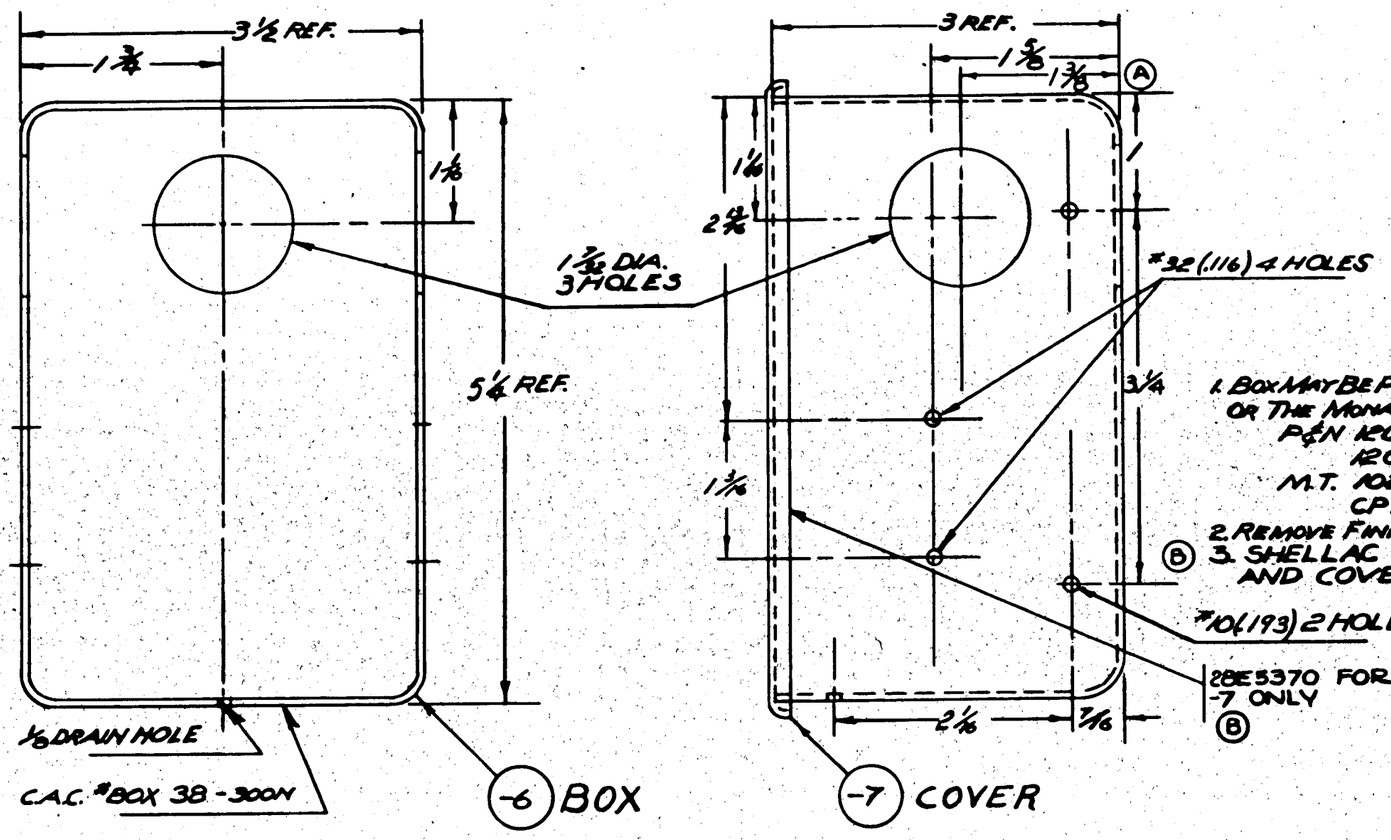

NOTES:
1. BOX MAY BE PURCHASED FROM EITHER THE POULSEN & NARDON CO. OR THE MONARCH TOOL CO. SPECIFYING
   P&N 1205-300N BOX
   1205-35D COVER
   M.T. 1022-300N BOX
   CP1022 COVER
2. REMOVE FINISH 3/16 RADIALLY AROUND CONDUIT HOLES
3. SHELLAC 28E5370 TO INSIDE OF BOX COVER AND COVER WITH SHELLAC

CONT. 91878 SHOWS 9/16 ON

ASSY. DASH NO.	MODEL	NEXT ASSY.	REQ'D.
-7	PBY-5	28E3293	1
-6	PBY-5	28E3294	1

REQUIREMENTS PER AIRPLANE

REPLACES — CALC. WT.

REPLACED BY — ACT. WT.

UNLESS OTHERWISE SPECIFIED ± 1/32 — SCALE 12" = 1'-0"

STAMP PART NUMBER WHERE SHOWN

28E5370-7 (NOTED ON FACE)
COVER -7 } (AC. BOX 38-300N
BOX -6

PART NO	STOCK	MATERIAL	SPEC.	LH REQ.	RH REQ.	LH REQ.	RH REQ.	LH REQ.	RH REQ.	LH REQ.	RH REQ.	LH REQ.	RH REQ.
PARTS LIST PER ASSY.				-0		-2		-3		-4		-5	

A.C.		9-12-42	
NAVY	P - INSIDE P-GP - OUTSIDE	R. Moore	
HEAT TREAT	FINISH	DRAFT	CHECK / STRUCT / MAT / APPROV / ENG

OPP. HAND

NAME: BOX-ELEC-WING A.C. JUNCTION

CONSOLIDATED AIRCRAFT CORP. SAN DIEGO, CALIF.

SIZE D — 28E5295

R 5-15-42

E.O. A80644
MCR. 89-18

LET	ALTERATION	DATE	BY
A	ADDED 28E5371 (TO B.M.S. NOTE: "SHELLAC ... WITH SHELLAC" NEG. W.T. CH.	12-12-89	ROSS

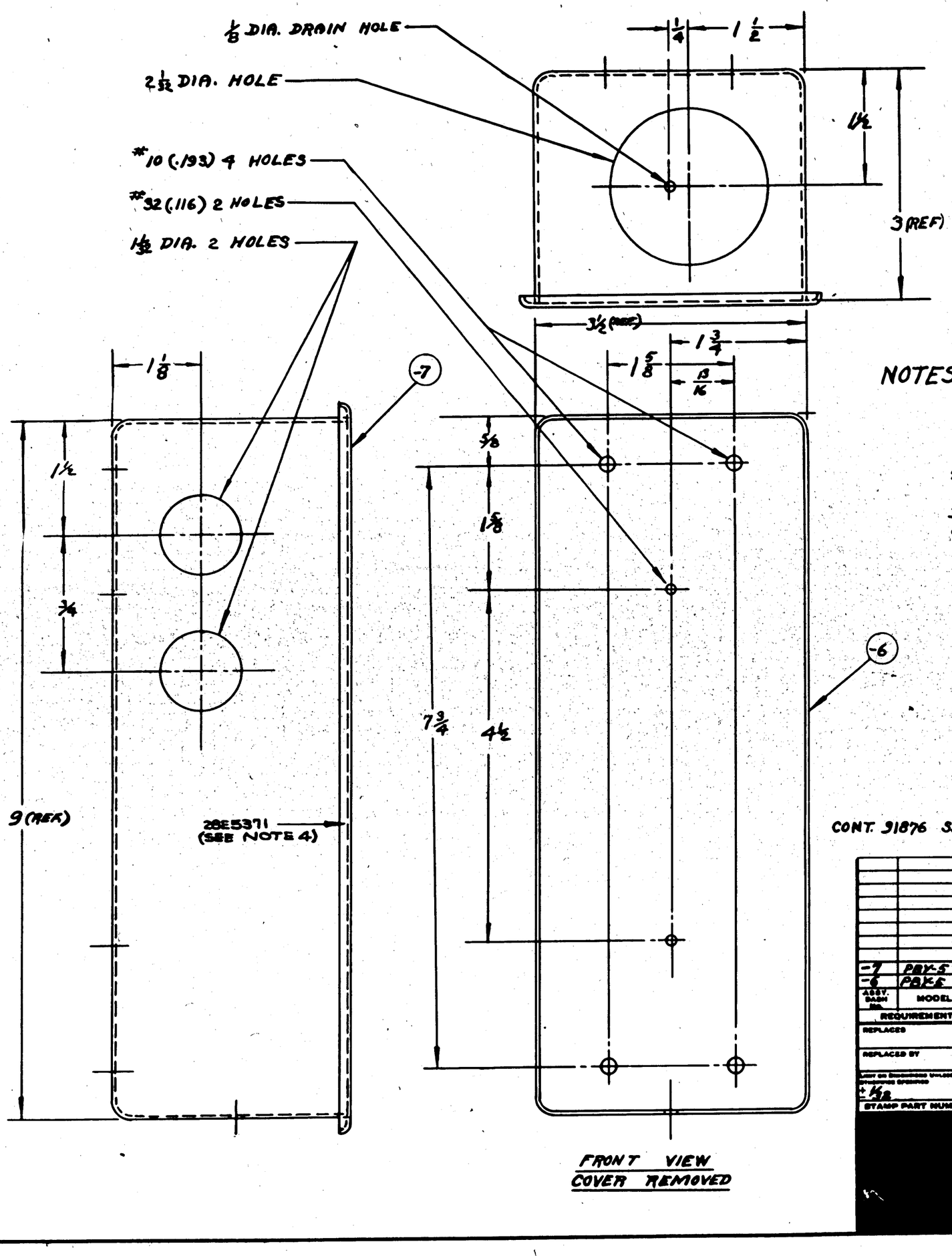

FRONT VIEW
COVER REMOVED

NOTES:

1. BOX MAY BE PURCHASED FROM TOULSEN & NARDON CO. SPECIFYING:
   P&N 1734-300N BOX
   P&N 1734-3SD COVER
2. BOX TO BE FURNISHED WITH TIGHT FITTING COVER NON-LOSEABLE SCREWS & DURAL WASHERS.
3. REMOVE FINISH 3/32 RADIALLY AROUND CONDUIT HOLES.
4. SHELLAC 28E5371 TO INSIDE OF BOX COVER 28E5296-7 (REF) AND COVER WITH SHELLAC. (A)

CONT. 31876 SHIPS. #91 & ON

ASSY. DASH No.	MODEL	NEXT ASSY.	REQ.
-7	PBX-5	28E5298	1
-6	PBX-5	28E5297	1

REQUIREMENTS PER AIRPLANE
REPLACES
REPLACED BY
CALC. WT. .57
ADV. WT.
SCALE 12" = 1'-0"
STAMP PART NUMBER WHERE SHOWN

28E5371 (SEE NOTE 4)
-7 } CRC BOX
-6 } BS-300N

PART No.	STOCK	MATERIAL	SPEC.	LH REQ. -0	RH REQ. -2	LH REQ. -3	RH REQ. -4	LH REQ. -5	RH REQ.

PARTS LIST PER ASSY.

A C
NAVY —
HEAT TREAT
P-INSIDE
P-RP-OUTSIDE
FINISH
KELEDAS 9-12-12
DRAFT CHECK STRUCT MAT APPROV ENG.

NAME BOX - ELEC. - BLK'D. 4 POWER JUNCTION
OPP. HAND
CONSOLIDATED AIRCRAFT CORP. SAN DIEGO, CALIF.
SIZE D
28E5296
R

E.O. A64293

LET	ALTERATION	DATE	BY
A	AN515-6-6(2) AC366F632(2) AN425AD3 WAS AN515-6-6(2) AC365-440(2) NEG. WT. CHG.	12-2[illegible]	BOSS
B	ADDED VIEW OF BOX COVER SHOWING STENCILING ADDED PART'S LA REQTS. AND MFG ENG.	8/7/53	[illegible]

MCR #930

AN3064-24
AN3066-24

AN3064-10 (2 REQ.)
AN3066-10 (2 REQ.)

Q6202-8

(A) AN515-6-6 (2 REQ)
AC366F632 (2 REQ)
AN425AD3

28E5296-6 (1)

28E5296-7 (REF.)

4 1/8

D.C. GENERATOR JUNCTION BOX

(B) VIEW SHOWING STENCILING IN 1/8" BLACK BLOCK LETTERING ON BOX COVER.
SCALE - 6" = 1'-0"

CONT. 91876 SHIPS. #91 & ON
C-NO. (S) 964

ASSY. DASH NO.	MODEL	NEXT ASSY.	REQ'D
PBY-5A	28E5298		1
PBY-5	28E5298		1

REQUIREMENTS PER AIRPLANE

REPLACES — CALC. WT. 1.34

REPLACED BY — ASY. WT.

SCALE 12" = 1'-0"

± 1/32

STAMP PART NUMBER WHERE SHOWN

PART NO.	STOCK	MATERIAL	SPEC.	LH REQ.	RH REQ.	LH REQ.	RH REQ.	LH REQ.	RH REQ.	LH REQ.	RH REQ.	LH REQ.	RH REQ.
PARTS LIST PER ASSY.				-0		-2		-3		-4		-5	
AC366F632				2									
AN3066-24				1									
AN3066-10				2									
AN3064-24				1									
AN3064-10				2									
AN515-6-6				2									
AN425AD3													
Q6202-8				1									
28E5296-6				1									

AC — NAVY — HEAT TREAT — NOTED ON DETAIL — FINISH

KELECIUS — DRAFT 9-14-[illegible] — CHECK — STRUCT — MAT — APPROV — ENG.

NAME BOX ASS'Y. - ELEC. - BLK'D. 4 POWER JUNCTION

OPP. HAND

CONSOLIDATED AIRCRAFT CORP. SAN DIEGO, CALIF.

SYMB. D SIZE 28E5297

R 28E5382

LET	ALTERATION	DATE	BY

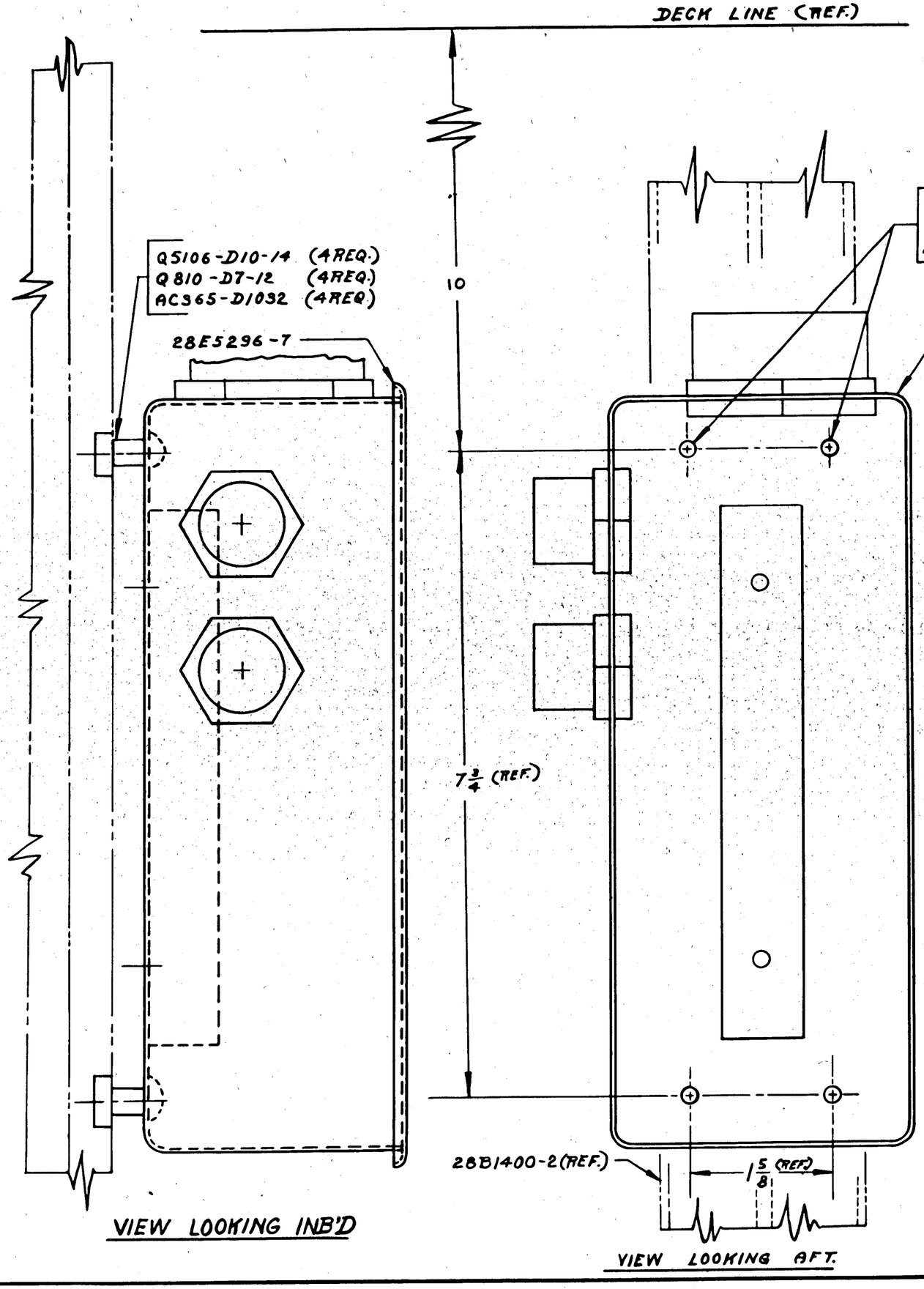

CONT. 91876 SHIPS #91 & ON

ASSY. DASH NO.	MODEL	NEXT ASSY.	REQ.
	PBY-5	28E4018	1

REQUIREMENTS PER AIRPLANE

REPLACES — CALC. WT. 1.41

REPLACED BY — ACT. WT.

SCALE 12" = 1'-0"

± 1/32

STAMP PART NUMBER WHERE SHOWN

PART NO	STOCK	MATERIAL	SPEC.	LH REQ. -0	RH REQ. -2	LH REQ. -3	RH REQ. -4	LH REQ. -5	RH
AC365-D1032				4					
Q5106-D10-14					4				
Q810-D7-12					4				
28E5296-7						1			
28E5297							1		

PARTS LIST PER ASSY.

AC — NAVY — HEAT TREAT — FINISH

DRAFT	CHECK	STRUCT.	MAT	APPROV	ENG.
KELECHA	Harrison	Yates	EDGER	Burk	Wilson
9-14-42	9-14-42				

OPP. HAND —

NAME INSTALL.-ELEC. - BLK'D 4 POWER JUNCTION BOX

CONSOLIDATED AIRCRAFT CORP. VF SAN DIEGO, CALIF.

DWG. D SIZE — 28E5298

R

LET	ALTERATION	DATE	BY

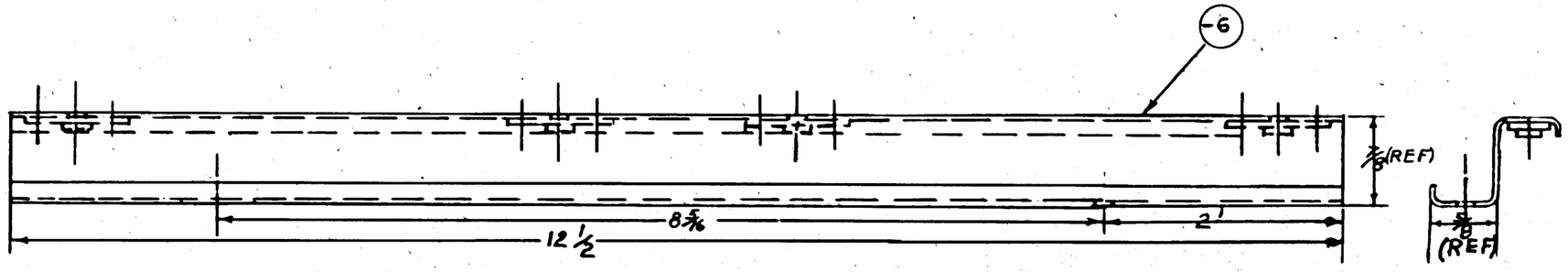

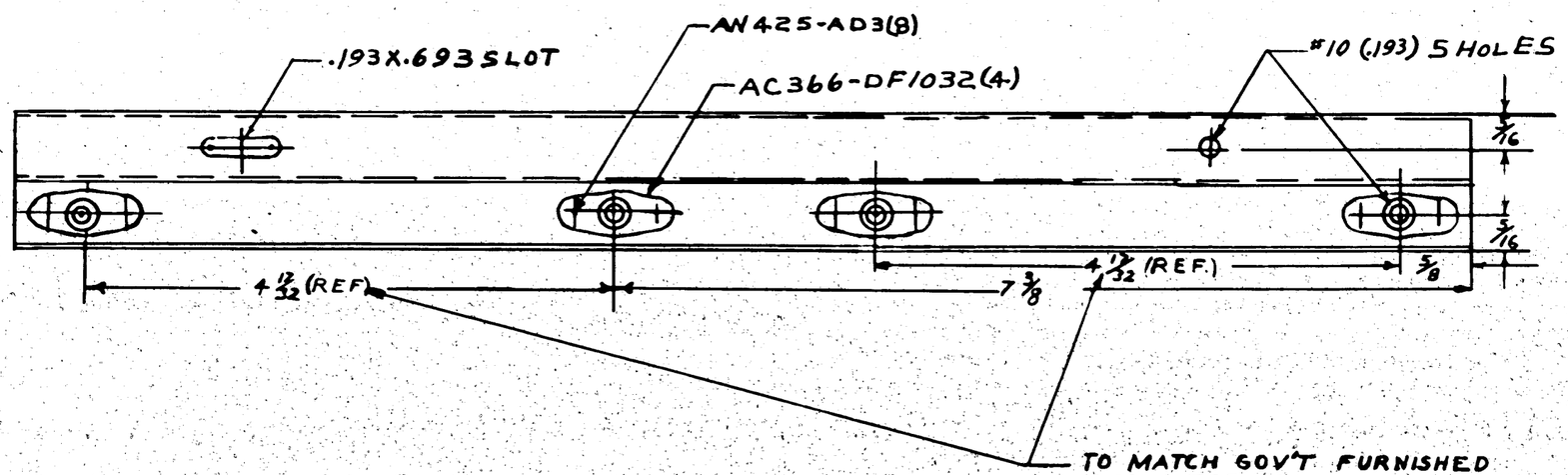

CONT. #91876
SHIPS #91 ON

ASSY. DASH NO.	MODEL	NEXT ASSY.	REQ.
-R	PBY-5	28E5287	1
-L	PBY-5	28E5287	1

REQUIREMENTS PER AIRPLANE

REPLACES — EST. WT. 215 CALC. WT.

REPLACED BY — ACT. WT.

UNLESS OTHERWISE SPECIFIED ± 1/32 — SCALE 12" = 1'0"

STAMP PART NUMBER WHERE SHOWN

PART NO	STOCK	MATERIAL	SPEC.	LH REQ. -0	RH REQ. -0	LH REQ. -2	RH REQ. -2	LH REQ. -3	RH REQ. -3	LH REQ. -4	RH REQ. -4	LH REQ. -5	RH REQ. -5
AC366-DF1032				4	4								
AN425-AD3				—	—								
-6	Y36-A5RT X 123/8					1							
-8	Y36-A5RT X 123/8			1									

PARTS LIST PER ASSY.

AC — NAVY — HEAT TREAT — Z-P-6P FINISH

DRAFT	CHECK	STRUCT	MAT	APPROV	ENG.
C.C. FRENCH 9/12/42	9/9/42			9-18-42	

NAME SUPPORT-ELEC-AUX. POWER UNIT REGULATORS

CONSOLIDATED AIRCRAFT CORP. WF SAN DIEGO, CALIF.

OPP. HAND 28E5299-R

DWG. SIZE D — 28E5299

R 9-1942

LET	ALTERATION	DATE	BY
A	CHG'D NAF 148-24, WAS AN3064-24. WT. CHG. NEG.	2-22-42	BRAND
B	ADDED NOTE "SHELLAC 28E5372 ---WITH SHELLAC." ALSO ADDED 28E5372 TO FACE B/M. NEG. WT. CHG.	2-28-42	BRANDON
C	DIM 15/16 WAS 3/4. NO WT. CHG.	4-30-43	WINTER
D	CHANGED LOCATION OF DRAIN HOLE ADDED LOCATING DIMS. NO. WT. CHG.	6-17-43	WINTER

E.O.A64161

E.O.A90688 (NCR8948)

E.O.A92406

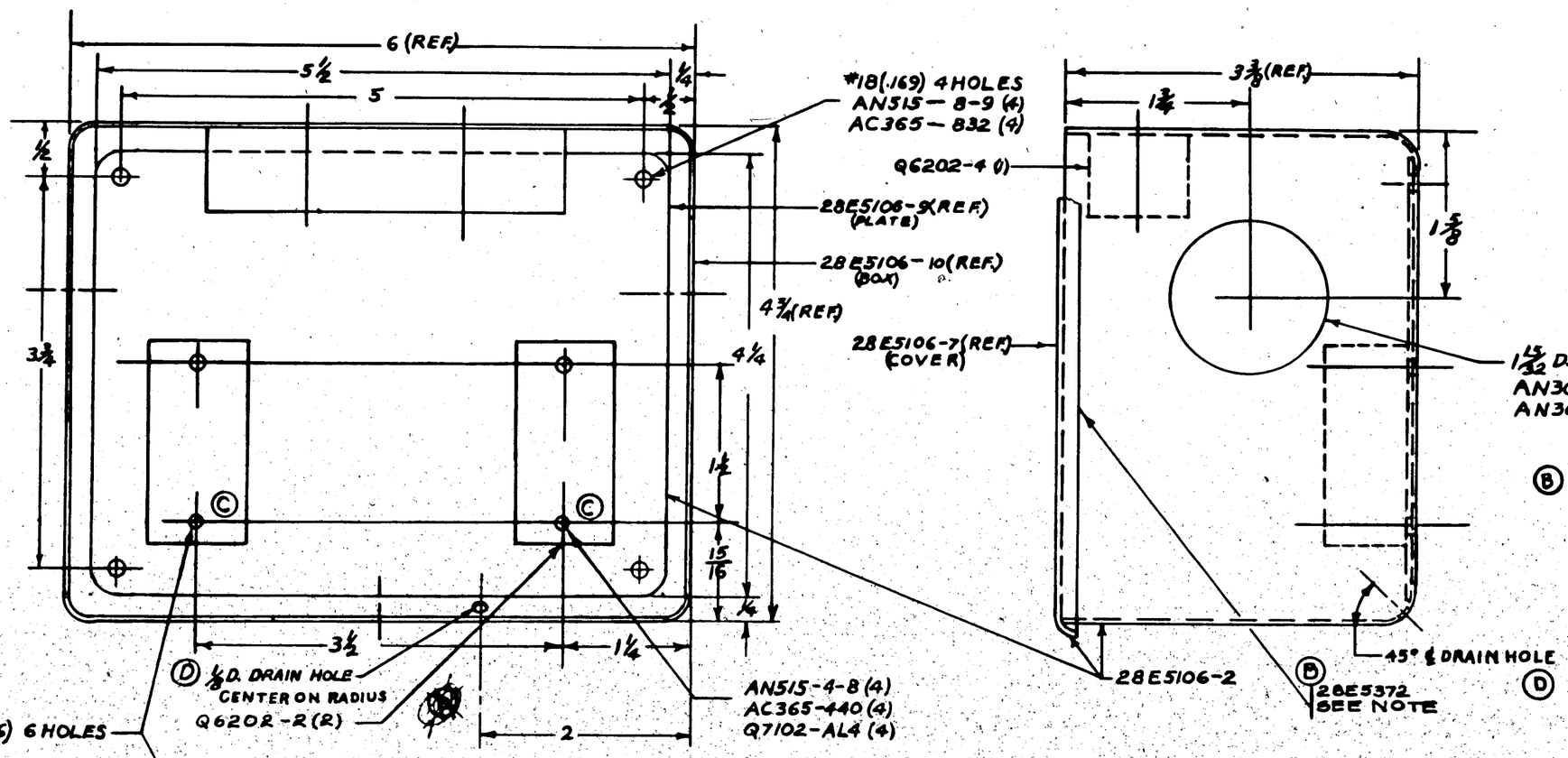

Ⓑ NOTE:- SHELLAC 28E5372 TO INSIDE OF BOX COVER AND COVER WITH SHELLAC

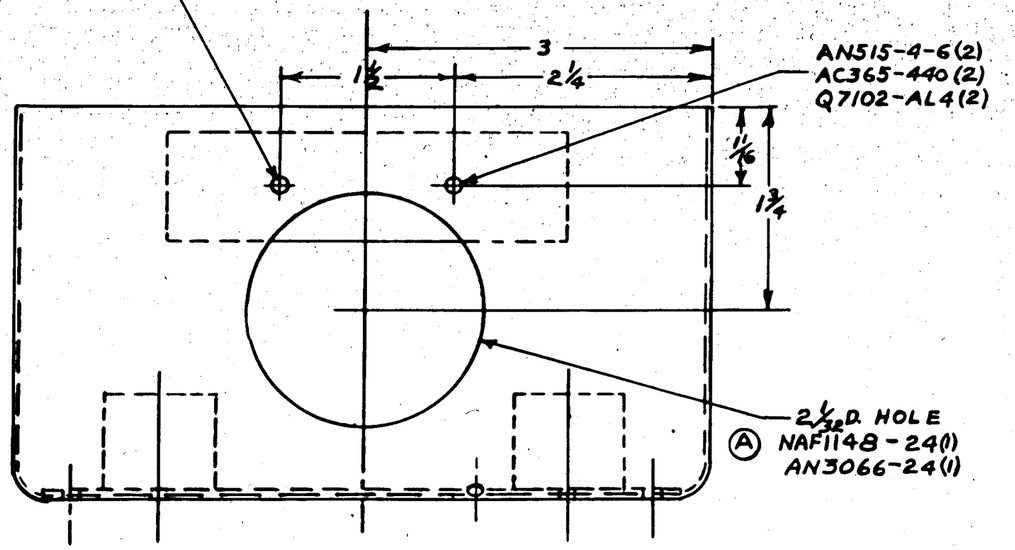

C#13595 PBY-5A 28E4014 /1
C#91876 #91 ON PBY-5 28E4014 /1

ASSY. DASH No.	MODEL	NEXT ASSY.	QTY.

REQUIREMENTS PER AIRPLANE

REPLACES — 810 CALC. WT.

REPLACED BY — ASY. WT.

UNLESS OTHERWISE SPECIFIED DIMENSIONS ARE IN INCHES ± 1/32 — SCALE 12" = 1'0"

STAMP PART NUMBER WHERE SHOWN

PART No.	STOCK	MATERIAL	SPEC.	LH REQ.	RH REQ.	LH REQ.	RH REQ.	LH REQ.	RH REQ.	LH REQ.	RH REQ.	LH REQ.	RH REQ.
PARTS LIST PER ASSY.				-0		-2		-3		-4		-5	
AC365-832												4	
AC365-440												6	
AN3066-24												1	
AN3066-16												2	
AN515-8-9												4	
AN515-4-8												4	
AN515-4-6												2	
NAF1148-24												1	
AN3064-16												2	
Q710R-AL4												6	
Q620R-4												1	
Q620R-2												2	
28E5372												1	
28E5106-2												1	

AC — NAVY — HEAT TREAT

M-1 HEADS P-GT-OUTSIDE — FINISH

C.C. FRANKLIN 9/4/42 — DRAFT

CHECK — STRUCT — MAT — APPROV — ENG

NAME BOX ASS'Y - ELEC. - D.C. WING JUNCTION

CONSOLIDATED AIRCRAFT CORP. SAN DIEGO, CALIF.

OPP. HAND

DWG. SIZE D — 28E5301

R 28E5382

E.O. 87029 A

BREWSTER E.O.659

LET	ALTERATION	DATE	BY
A	FOR -0 ASSY. 28E5373-6(1) WAS 28E5373-6(1) FOR -2 ASSY., 28E5373-7(1) WAS 28E5836 -7 REVISED NOTES 1 & 2 ON FACE OF DRG.	1/10/42	[illegible]
B	IN -0 ASSY, AN3064-8(2) WAS AN3064-8(2) (AN3066-8(2) WAS AN3066-8(2	1/14/42	[illegible]

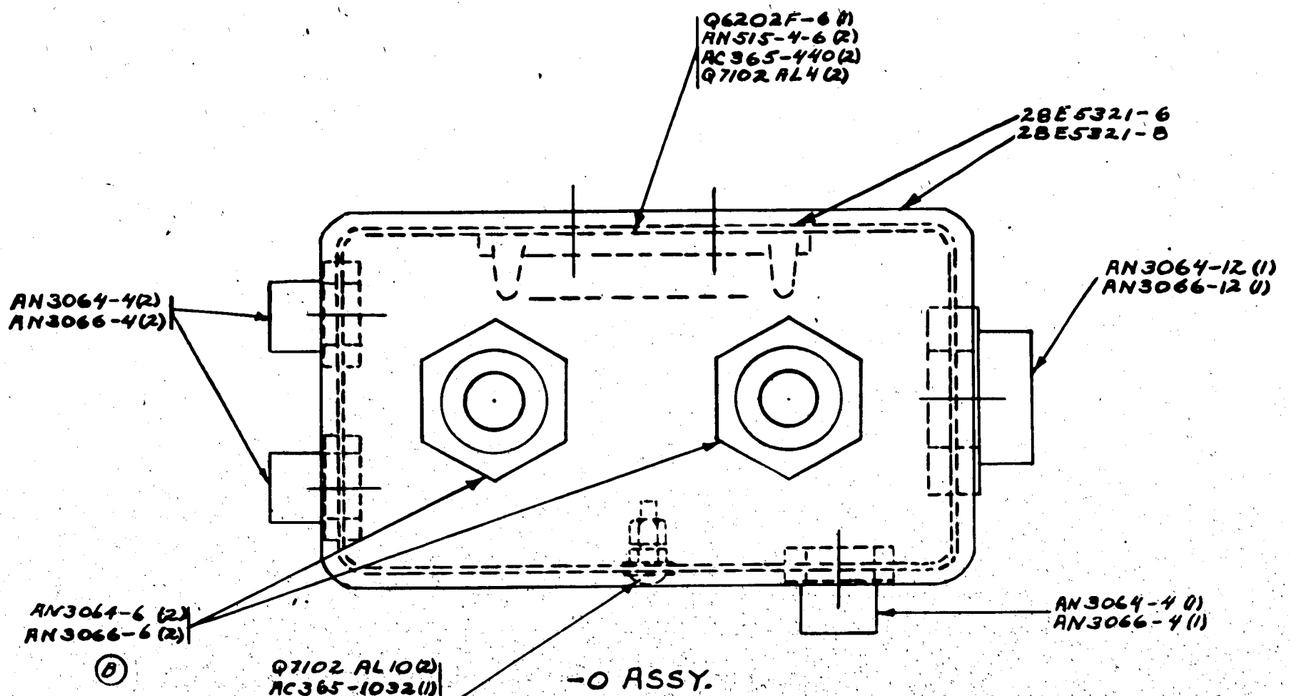

-0 ASSY.

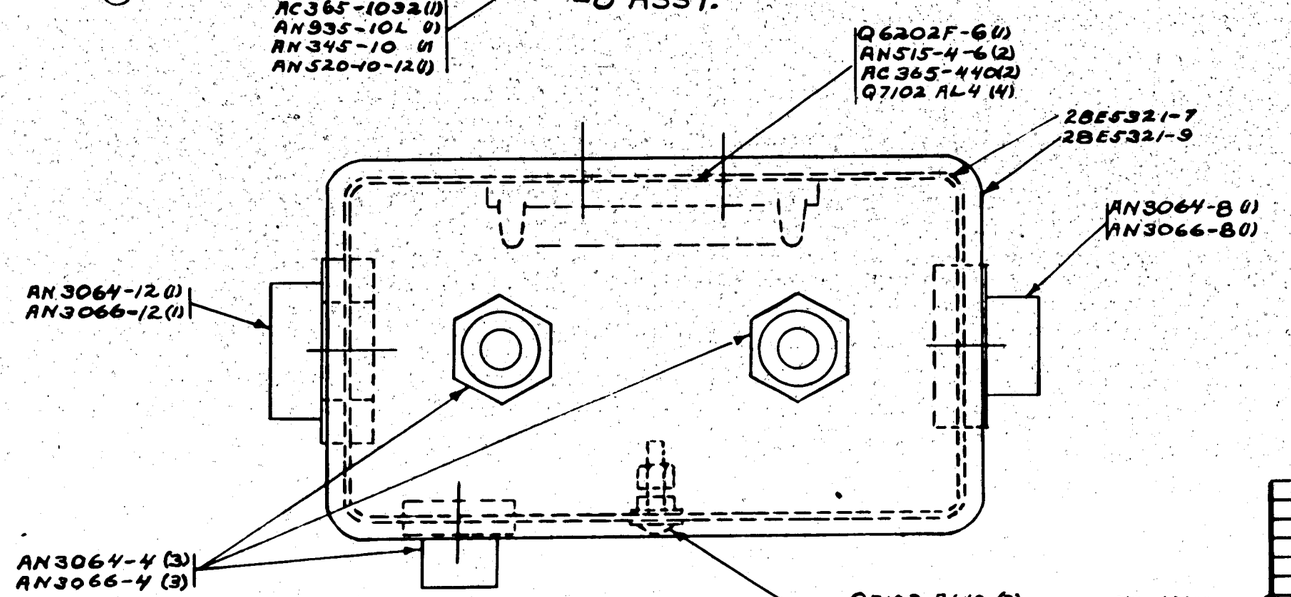

-2 ASSY

NOTE

(A) 1. SHELLAC 28E5373-6 TO INSIDE OF 28E5319-0 BOX
2. SHELLAC 28E5373-7 TO INSIDE OF 28E5319-2 BOX
3 PARTS FURN. BY BREWSTER.

NOTE (B) 464 → CONT. 91876 CAC. CH. 23

ASSY. SASH No.	MODEL	NEXT ASSY.	QUAN.
2	PBY-5A	28E5320	1
0	PBY-5A	28E5320	1
2	PBY-5	28E5320	1
0	PBY-5	28E5320	1

REQUIREMENTS PER AIRPLANE

REPLACES — CALC. WT. .67

REPLACED BY — ASY. WT.

UNLESS OTHERWISE SPECIFIED DIMENSIONS ARE IN INCHES ± 1/32 — SCALE 12" = 1'0"

STAMP PART NUMBER WHERE SHOWN

PART No.	STOCK	MATERIAL	SPEC.	LH REQ. -0	RH REQ. -0	LH REQ. -2	RH REQ. -2	LH REQ. -3	RH REQ. -3	LH REQ. -4	RH REQ. -4	LH REQ. -5	RH REQ. -5
Q6202F-6				1		1							
Q7102 AL4				2		2							
Q7102 AL10				2		2							
AN3066-8								1					
AC365-1032				1		1							
AC365-440				2		2							
AN3064-8								1					
AN520-10-12				1		1							
AN345-10				1		1							
AN935-10L				1		1							
AN515-4-6				2		2							
AN3066-12				1									
AN3066-6				2									
AN3066-4				3		3							
AN3064-12				1		1							
AN3064-6				2									
AN3064-4				3		3							
28E5373-6 (A)				1									
28E5373-7						1							
28E5321-2								1					
28E5321-0				1									
-8													

PARTS LIST PER ASSY.

AC		9/22/42	
NAVY NONE	NONE	KING	
HEAT TREAT	FINISH	DRAFT	CHECK / STRUCT / MAT / APPROV / ENG.

NAME BOX ASSY. -ELEC- WING LIGHT JUNCTION

OPP. HAND

CONSOLIDATED AIRCRAFT CORP. WF SAN DIEGO, CALIF.

DWG. D SIZE 28E5319

R

E.O. A09424	LET	ALTERATION	DATE	BY
	A	Q811-D7-16 (4) WAS Q8000-7-16 (4). NO WT. CHG.	12-23-42	

STA 25 (REF)

TOP OF FRONT SPAR (REF)

#10 (.193) DIA. HOLES (4) IN FRONT SPAR TO MATCH 28E5319

1½

3

Q811-D7-16 (4) : (A)
Q5106D10-16 (4)
AC 365D1032 (4)

28E5319-0 L.H.
28E5319-2 R.H.

VIEW LOOKING FORWARD
PORT SIDE

CONT NX3 13 595

CONT 91876 #90 & #346 ON

ASSY. DASH No.	MODEL	NEXT ASSY.	REQ.
-2	P8Y-5A	28E5318	1
-0	P8Y-5A	28E5318	1
-2	P8Y-5	28E5318	1
-0	P8Y-5	28E5318	1

REQUIREMENTS PER AIRPLANE

REPLACES

REPLACED BY

.69 CALC. WT.

ACT. WT.

SCALE 12" = 1'0"

± 1/32

STAMP PART NUMBER WHERE SHOWN

PART No	STOCK	MATERIAL	SPEC.	LH REQ. -0	RH REQ. -2	LH REQ. -3	RH REQ. -4	LH REQ. -5	RH
Q811-D7-16				4	4				
Q5106D10-16				4	4				
AC365D1032				4	4				
28E5319-2					1				
28E5319-0 -0				1					

PARTS LIST PER ASSY.

AC		9/22/42	DRAFT	CHECK	STRUCT	MAT	APPROV	ENG
NAVY NONE	NONE	KING						
HEAT TREAT	FINISH							

NAME INSTAL. -ELECT- WING LIGHT JUNCTION BOX.

OPP. HAND

CONSOLIDATED AIRCRAFT CORP. SAN DIEGO, CALIF

DWG. SIZE D

28E5320

R

LET	ALTERATION	DATE	BY
A	CREATED - 2 ASSEM. NEG. WT CHG.	1-30-43	SWANSON
B	1 15/32 DIA. HOLE WAS 1 1/32 DIA. HOLE		
	WT. CHG. NEG.	2-15-43	DINGLEY
C	CREATED - 3 ASSY FOR PBY-5		
	C-01876 SHIPS 346 & ON		
	1 25/32 DIA. HOLE WAS 1 15/32		
	LIMITED - 0 ASSY. FOR SHIPS		
	90 TO 345		
	WT. CHG. NEG	3-22-43	SHELTON

E.O.# 37576
MCR# 164-B
E.O. B2009

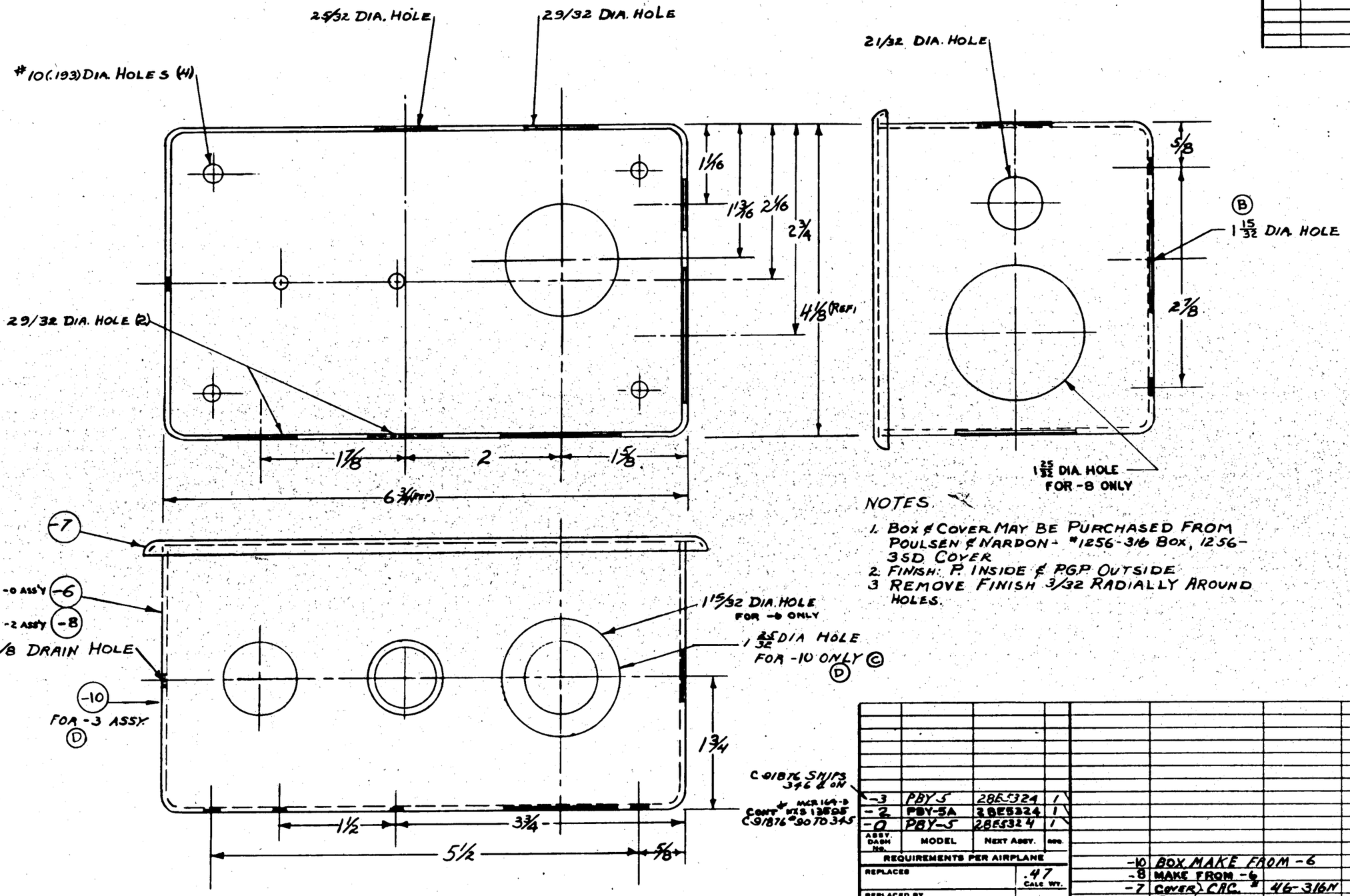

NOTES.

1. BOX & COVER MAY BE PURCHASED FROM POULSEN & NARDON - #1256-316 BOX, 1256-35D COVER
2. FINISH: P. INSIDE & P.G.P. OUTSIDE
3 REMOVE FINISH 3/32 RADIALLY AROUND HOLES.

ASSY. DASH No.	MODEL	NEXT ASSY.	REQ.
-3	PBY-5	28E5324	1
-2	PBY-5A	28E5324	1
-0	PBY-5	28E5324	1

REQUIREMENTS PER AIRPLANE

REPLACES — WT. .47 CALC WT.

REPLACED BY — ACT. WT.

LIMIT OF DIMENSIONS UNLESS OTHERWISE SPECIFIED ± 1/32 — SCALE 12" = 1'0"

STAMP PART NUMBER WHERE SHOWN

PART No	STOCK	MATERIAL	SPEC.	LH REQ. -0	RH REQ. -0	LH REQ. -2	RH REQ. -2	LH REQ. -3	RH REQ. -3	LH REQ. -4	RH REQ. -4	LH REQ. -5	RH REQ. -5
-10	BOX MAKE FROM -6							1					
-8	MAKE FROM -6					1							
-7	COVER CAC. #	46-316N		1				1					
-6	BOX			1									

PARTS LIST PER ASSY.

A C								
NAVY NONE	NOTED	9/12-1/2	9/29/42			MRW		
HEAT TREAT	FINISH	DRAFT	CHECK	STRUCT.	MAT'L	APPROV.	ENG.	

NAME BOX - ELEC - BULKHEAD #6 JUNCTION

OPP. HAND

CONSOLIDATED AIRCRAFT CORP. SAN DIEGO, CALIF.

DWG. D SIZE 28E5323

R

LET	ALTERATION	DATE	BY
A	ADDED NOTE:-SHELLAC ..... SHELLAC 28E5376(1) WT CHG NEG	2-1-43	MOE
B	CREATED -2 ASSY. NO WT CHG	2-1-43	MOE
C	CREATED -3 ASSY. LIMITATION PER -ORDER NO 90-345 WAS 3 PLAN	5-13-43	BRANNAN
D	ON FACE OF DWG. C & M AN 3066-20(1) WAS AN 3660-20(1)	3-30-43	BRAMHALL STEW
E	AN3064-8(2) WAS(2)	4-21-43	Kapp
F	BOARD VIEW FOR STENCILING DIRECTIONS. NO WT CHG	8-4-43	Nagel
G	NAF1149-20(1)IN-2 ASSY WAS NAF 1149-20. WT CHG NEG	8-23-43	BARKELEW

E.O. A90114 (#89-18)

E.O. 97579 (C.A.C. #164-3)

E.O. B3641

MCR #390

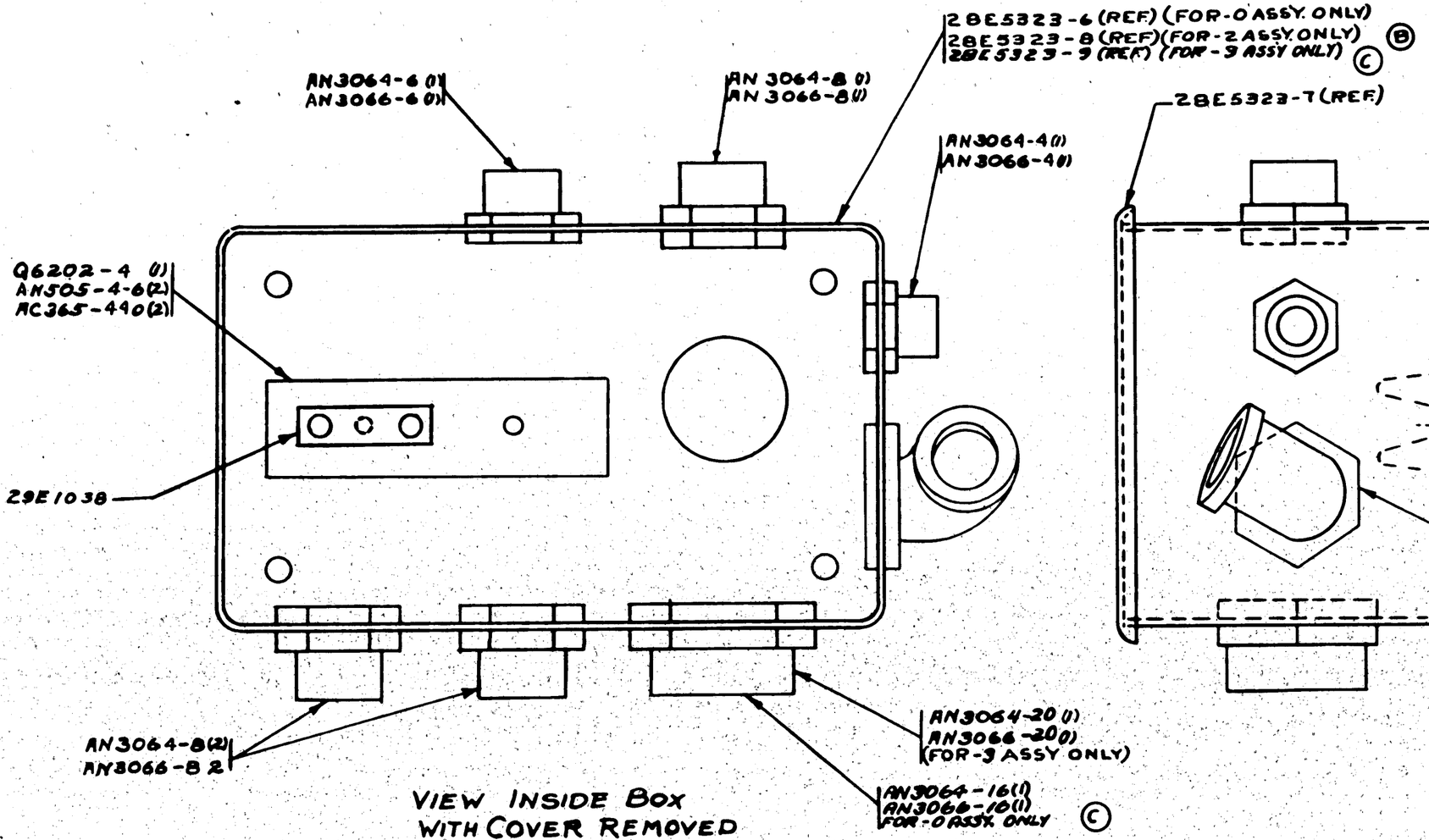

VIEW INSIDE BOX WITH COVER REMOVED

NOTE:-
SHELLAC 28E5376 TO INSIDE OF COVER & COVER WITH SHELLAC. (A)

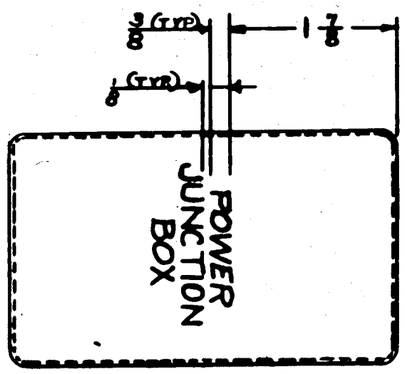

(F) VIEW SHOWING STENCILING IN 1/8" BLACK BLOCK LETTERS ON BOX COVER. SCALE-6"=1'0"

C.90376 #3461 ON C.NO 2(2) 464
C.90376 #90-345 (#89-18)

PART No.	STOCK	MATERIAL	SPEC.	LH REQ. -0	RH REQ. -0	LH REQ. -2	RH REQ. -2	LH REQ. -3	RH REQ. -3	REQ. -4	REQ. -5
NAF1149-20					1						
AN3064-20							1				
28E5323-3								1			
28E5376				1		1		1			
AN3066-16				1							
Q6202-4				1		1		1			
AN3064-16				1							
AC365-440				2		2		2			
AN505-4-6				2		2		2			
AN3066-8				3		3		3			
AN3066-6				1		1		1			
AN3066-4				1		1		1			
AN3064-8				3		3		3			
AN3064-6				1		1		1			
AN3064-4				1		1		1			
28E5323-2						1					
29E1038				1		1		1			
28E5323-0				1							
-3											

PARTS LIST PER ASSY.

ASSY. DASH NO.	MODEL	NEXT ASSY.	QTY.
-3	PBY-5	28E5325	1
-2	PBY-5A	28E5325	1
-0	PBY-5	28E5325	1

REQUIREMENTS PER AIRPLANE

REPLACES — REPLACED BY — .789 Engr. Wt. — Adv. Wt.

STAMP PART NUMBER WHERE SHOWN — SCALE

AC — NAVY NONE — NONE — HEAT TREAT — FINISH

DRAFT — CHECK — STRUCT — MAT — APPROV — ENG

NAME BOX ASSY. -ELEC- BULKHEAD #6 JUNCTION

OPP. HAND NONE

DWG. D SIZE 28E5324

CONSOLIDATED AIRCRAFT CORP. SAN DIEGO, CALIF.

R 28E5324

LET	ALTERATION	DATE	BY
	E.O.A74956		
A	NOTE #10(.193) DIA--ASSY WAS #10(.193) DIA--- BOX 28E5324 WAS 28E5323. NO WT CHG.	4-20-43	WINTER
B	CREATED-2 ASSY. -NO WT. CHG.	4-20-43	WINTER
C	1 15/32 DIA HOLE WAS 1 1/32		
	AN3064-16(1) & AN3066-16(1) WAS AN3064-12(1) & AN3066-12(1) NT. CHG. NEG.	5-26-43	BRENNAN
D	ADDED NOTE (C). LIMITED -0 ASSY. FOR SHIPS 90 TO 345. ADDED-3 ASSY FOR SHIPS 346 & ON.	9-21-43	CLARK

E.O.A97580
MCR.164-3
E.O.B.2008

TOP OF BLKHD #6

5 1/2 (REF)

QS10GD10-10 (4)
AC372D1032 (4)

Ⓒ MATCH 1 15/32 DIA. HOLE IN BOX WITH 1 15/32 DIA HOLE IN #6 BULKHEAD.

Ⓐ #10(193) DIA. HOLES (4) IN #6 BLKHD TO MATCH 28E5324 BOX ASSY.

28B1600-69 (REF)

28B1600-70 (REF)

℄ OF SHIP

AN 3064-16 (1)
AN 3066-16 (1) Ⓒ

#6 BLKHD (REF)

Ⓐ 28E5324-1 FOR-0 ASSY
Ⓑ 28E5324-2 (FOR-2 ASSY
Ⓒ 28E5324-3 (FOR-3 ASSY.)

Ⓓ

VIEW- FORWARD FACE BLKHD #6
LOOKING AFT

C.91876
MCR.164-3 C
346 & ON 13595
(MCR# 26-3) CONT. 91876-90 TO 345

ASSY. DASH NO.	MODEL	NEXT ASSY.	REQ'D.
-3	PBY-5	28E1013	1
-2	PBY-5A	28E5663	1
0	PBY-5	28E1013	1

REQUIREMENTS PER AIRPLANE

REPLACES
REPLACED BY
CALC. WT. .9
ACT. WT.

LIMIT OR TOLERANCE UNLESS OTHERWISE SPECIFIED ± 1/32
SCALE 12" = 1'0"
STAMP PART NUMBER WHERE SHOWN

PART No	STOCK	MATERIAL	SPEC.	LH REQ.	RH REQ.	LH REQ.	RH REQ.	LH REQ.	RH REQ.	LH REQ.	RH REQ.	LH REQ.	RH REQ.
28E5324-3													
QS106D10-10				4	4	4							
AC372D1032				4	4	4							
AN3064-16(1)				1	1	1							
AN3066-16(1)				1	1	1							
28E5324-2					1								
28E5324-0				1									
-6													

PARTS LIST PER ASSY.

AC			DRAWN	9/28/42					
NAVY NONE		NONE	KING	Mel.					
HEAT TREAT		FINISH	DRAFT	CHECK	STRUCT	MAT	APPROV	ENG	

NAME INSTAL'N - ELEC - BLKHD # 6 JUNCTION BOX
CONSOLIDATED AIRCRAFT CORP. SAN DIEGO, CALIF.

OPP. HAND
DWG. SIZE D
28E5325

RC 10/9/42

LET	ALTERATION	DATE	BY
A	AN345-10(1) WAS AC335-10(1) NO WT. CHG.	1-16-43	
B	ADDED 28E5381 & NOTE		
	SHELLAC 28E5381 --- SHELLAC NEG WT CHG.	1-16-43	

E.O. A30108 REC 89-18

VIEW INSIDE BOX
WITH COVER REMOVED

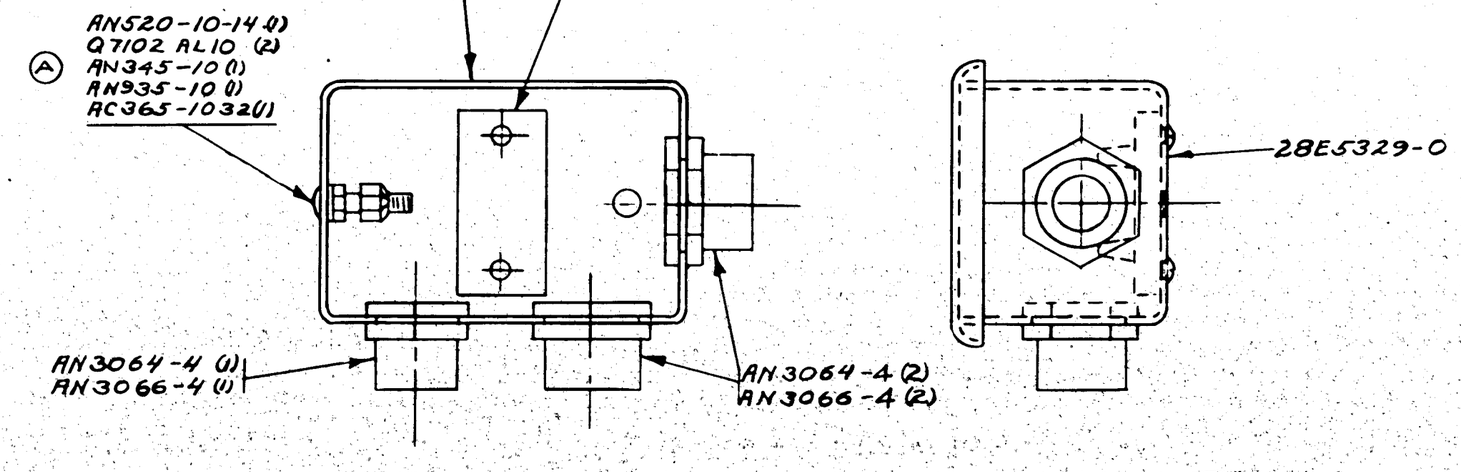

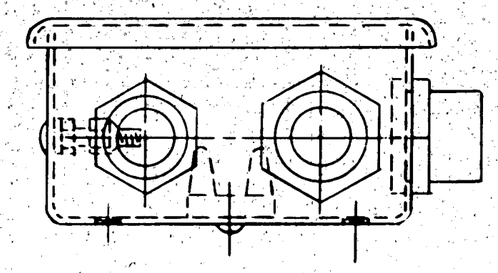

NOTE: (B)
SHELLAC 28E5381 TO INSIDE OF BOX COVER & COVER WITH SHELLAC.

C. 9/876 "9/10N

ASSY. DASH NO.	MODEL	NEXT ASSY.	REQ'D
-0	PBY-5	28E5328	1

REQUIREMENTS PER AIRPLANE

REPLACES
CALC WT. .43
REPLACED BY
ACT. WT.

LIMIT ON DIMENSIONS UNLESS OTHERWISE SPECIFIED ± 1/32
SCALE 12" = 1'0"
STAMP PART NUMBER WHERE SHOWN

PART NO	STOCK	MATERIAL	SPEC.	LH REQ.	RH REQ.	LH REQ.	RH REQ.	LH REQ.	RH REQ.	LH REQ.	RH REQ.	LH REQ.	RH REQ.
Q6202F-2				1									
Q7102-AL4				2									
Q7102 AL10				2									
AC365-440				2									
AN345-10				1									
AC365-1032				1									
AN515-4-6				2									
AN520-10-14				1									
AN935-10				1									
AN3064-4				3									
AN3066-4				3									
28E5381				1									
28E5329-0 -6				1									

PARTS LIST PER ASSY.

AC		KING	
NAVY NONE	NONE	10/2/42	
HEAT TREAT	FINISH	DRAFT	CHECK / STRUCT / MAN / APPROV / ENG

NAME BOX ASSY - ELEC - GYRO LIGHT JUNCTION
OPP. HAND NONE
CONSOLIDATED AIRCRAFT CORP. SAN DIEGO, CALIF.
DWG. SIZE D
28E5327

R

LET	ALTERATION	DATE	BY

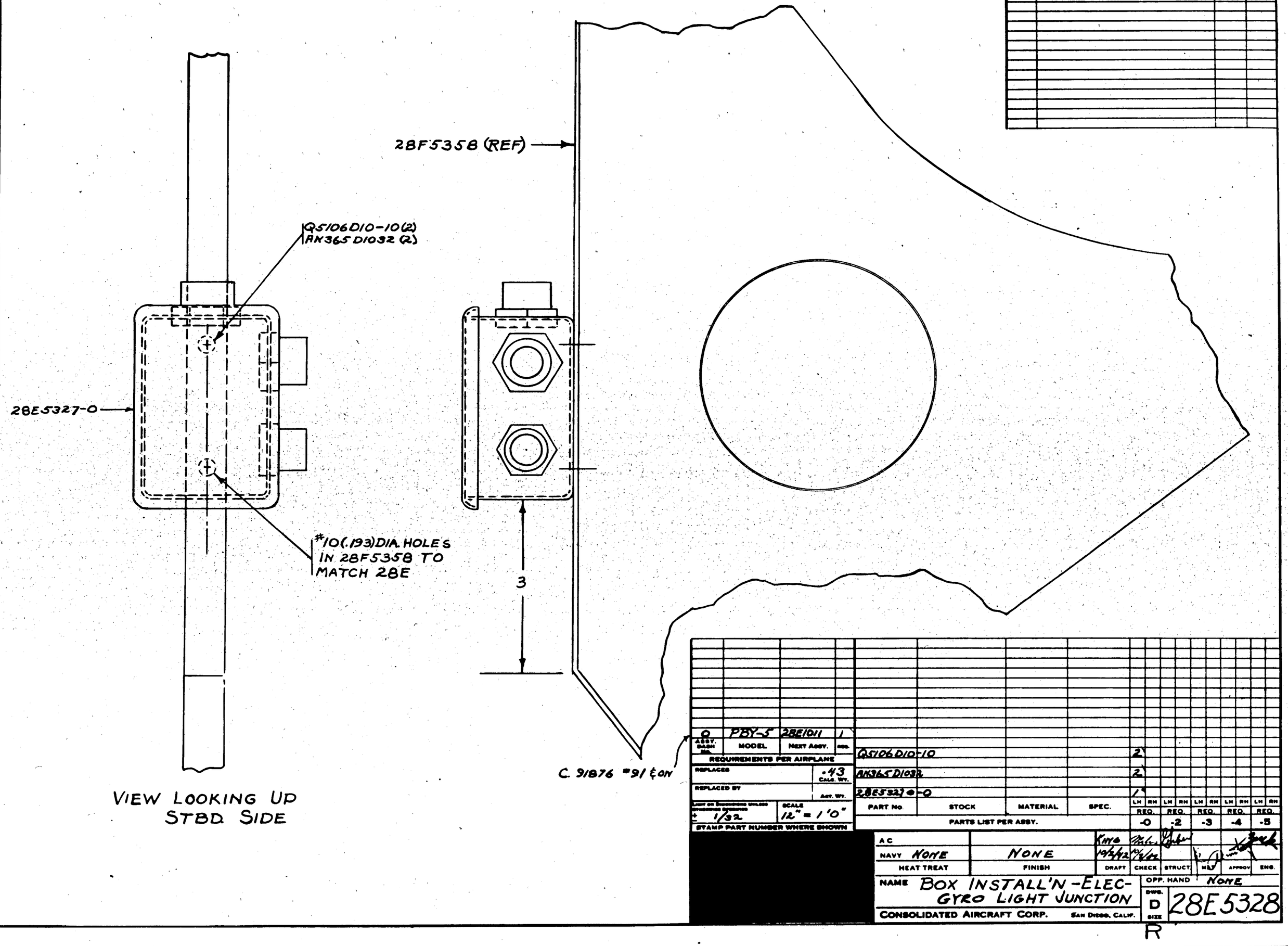

| | | |

LET	ALTERATION	DATE	BY
A	1 1/16 DIA. WAS 2 5/64 NO. WT. CHG.	1-30-43	[illegible]

ECN A043334

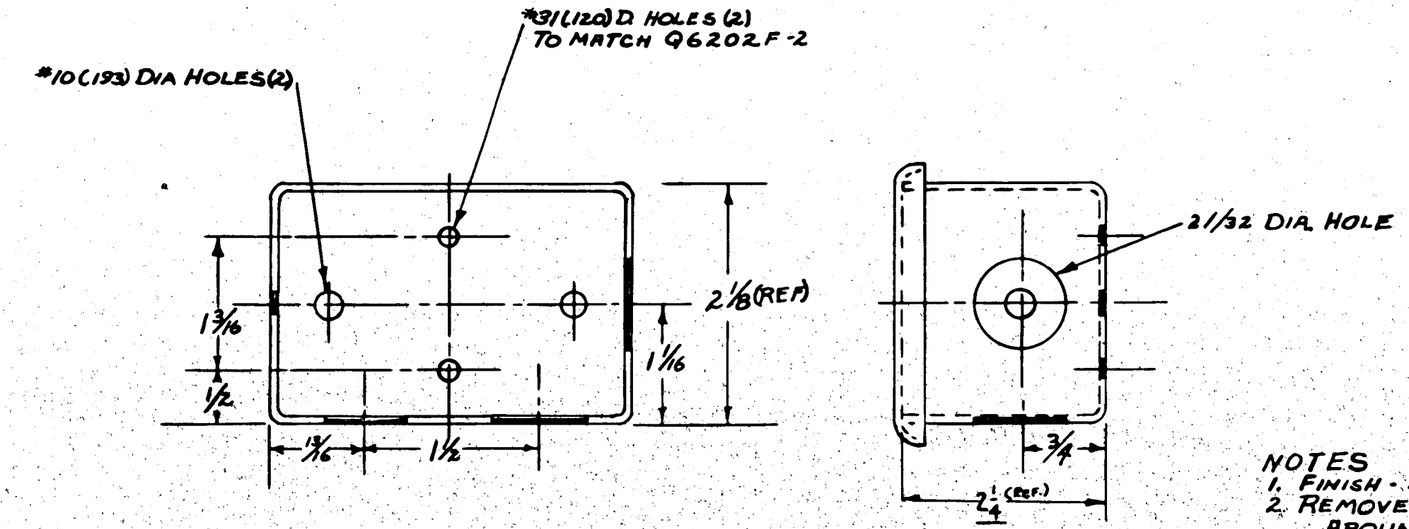

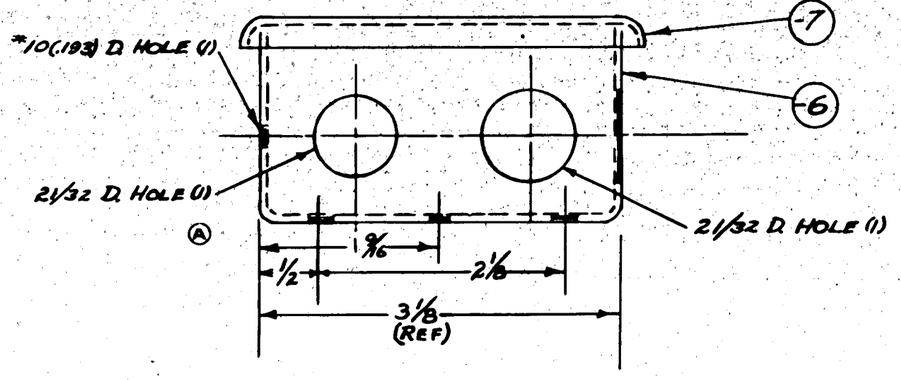

NOTES
1. FINISH - P. INSIDE PGP. OUTSIDE
2. REMOVE FINISH 3/32 RADIALLY AROUND HOLES
3. BOX AND COVER MAY BE PURCHASED FROM POULSEN & NARDON *1065-208 BOX, *1065-1 COVER TINNERMAN *5928 FASTENERS

C.91876 *9/40N

ASSY. DASH NO.	MODEL	NEXT ASSY.	REQ.
-0	PBY-5	28E5327	1

REQUIREMENTS PER AIRPLANE

REPLACES — .21 CALC. WT.

REPLACED BY — ACT. WT.

LIGHT ON DIMENSIONS UNLESS OTHERWISE SPECIFIED ± 1/32

SCALE 12" = 1'0"

STAMP PART NUMBER WHERE SHOWN

PART NO	STOCK	MATERIAL	SPEC.	LH REQ. -0	RH REQ. -0	LH REQ. -2	RH REQ. -2	LH REQ. -3	RH REQ. -3	LH REQ. -4	RH REQ. -4	LH REQ. -5	RH REQ. -5
28E5329-7	COVER } CAC. *193-208			1									
28E5329-8	BOX }				1								

PARTS LIST PER ASSY.

A C		KING				
NAVY	NOTED	10/2/42				
HEAT TREAT	FINISH	DRAFT	CHECK	STRUCT	MAT	APPROV	ENG.

NAME BOX - ELECT - GYRO LIGHT JUNCTION

OPP. HAND

CONSOLIDATED AIRCRAFT CORP. SAN DIEGO, CALIF.

DWG. SIZE D

28E5329

R

LET	ALTERATION	DATE	BY
EQA 92073 A	ADDED NOTE "DRILL --- FOR -2 ASSY" IN REGTR PER AIRPLANE B'L'S "CON. 91876-346 ON" WAS "CON 91876-361 -ON" REPLACED 28E5333-20 FOR -2 ASSY WITH 28E5387(1) WT. CHG. NEG.	3-22-43	CARTER BY
EQA 96699 B	ADDED 9 HOLES FOR BOX IN -2 ASSY. NEG. WT. CHG.	3-22-43	CARTER BY
EQB 0280 C	28E5387-60 & 28E5387-70 REPLACES 28E5387(1) -2 ASSY. NEG. WT. CHG.	5-27-43	CARTER BY
D	"4 HOLES IN B'KH'D --- -0 ASSY" WAS "DRILL HOLES --- -0 ASSY, & IN BOX -- FOR -2 ASSY" & "10 HOLES IN B'KH'D --- -2 ASSY" WAS "DRILL 9 HOLES --- -2 ASSY." WT. CHG. NEG.	9/21/43	WHEELER BY

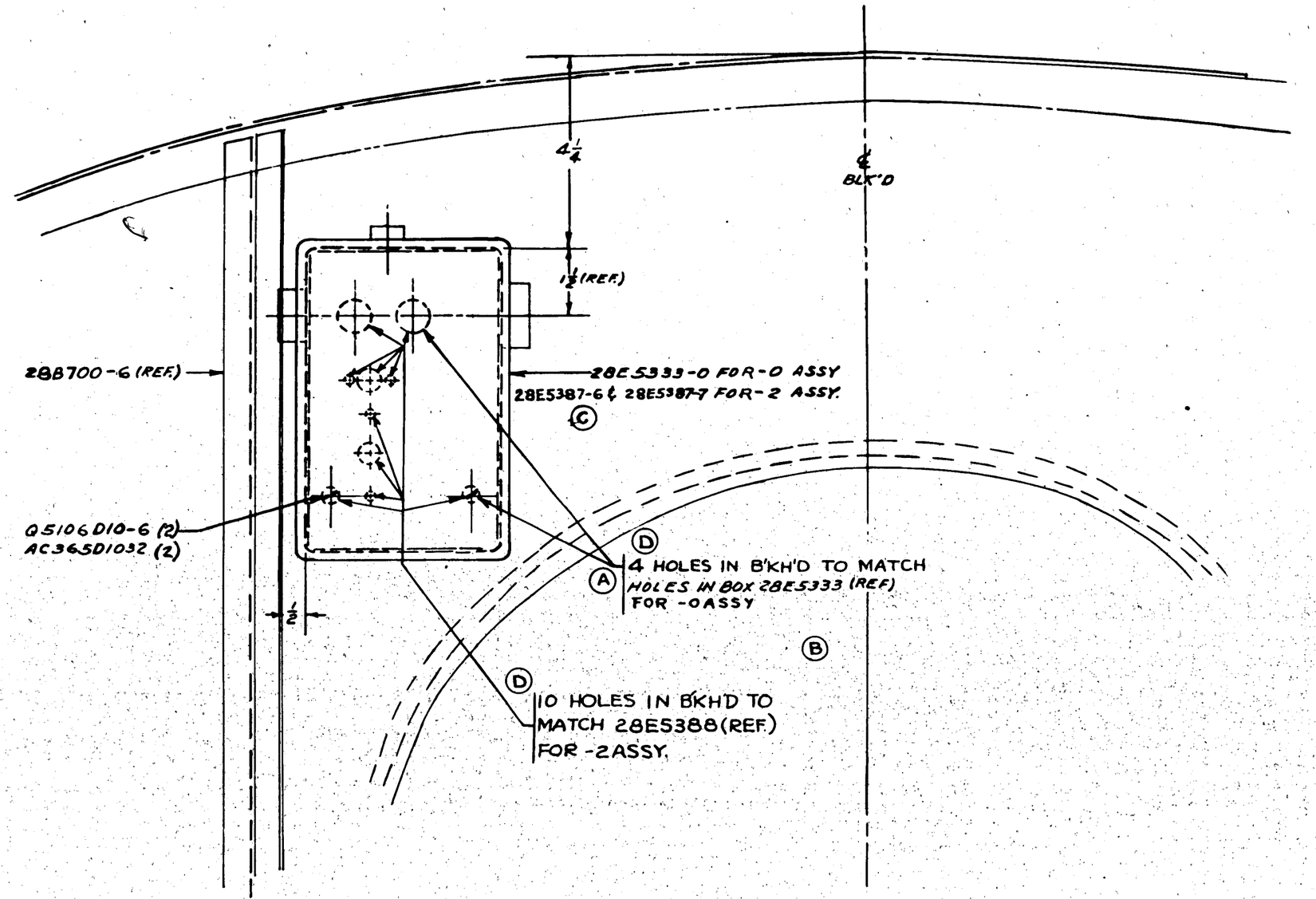

VIEW LOOKING FORWARD
BULKHEAD #7

C.NXS-13595—
Con.#91876-#346 ON—
Con.#91876 SHIP #90—

ASSY. DASH NO.	MODEL	NEXT ASSY.	REQ.
-2	PBY-5A	28E1013	1
-2	PBY-5	28E1013	1
-0	PBY-5	28E1013	1

REQUIREMENTS PER AIRPLANE

REPLACES — CALC. WT. 40

REPLACED BY — ACT. WT.

LIGHT ON DRAWING UNLESS OTHERWISE SPECIFIED ± 1/32

SCALE 6"=1'0"

STAMP PART NUMBER WHERE SHOWN

PART NO	STOCK	MATERIAL	SPEC.	LH REQ. -0	RH REQ. -0	LH REQ. -2	RH REQ. -2	LH REQ. -3	RH REQ. -3	LH REQ. -4	RH REQ. -4	LH REQ. -5	RH REQ. -5
AC3650 1032						2	2						
Q5106D10-6						2	2						
28E5387-7								1					
28E5387-6									1				
28E5333-0				1									

PARTS LIST PER ASSY.

AC		10/15/42					
NAVY —	—	MALLORY					
HEAT TREAT	FINISH	DRAFT	CHECK	STRUCT	MAT	APPROV	ENG

NAME INSTALL - ELEC.
ANTI-ICER TAIL SWITCH BOX

CONSOLIDATED AIRCRAFT CORP. SAN DIEGO, CALIF.

OPP. HAND

DWG. SIZE D

28E5332

R

CAC# 23 (19)

LET	ALTERATION	DATE	BY
A	REMOVED -2 ASS'Y. FROM DRWG. & MADE NEW DRWG. 28E5387 FOR -2 ASS'Y.	11-27-42	[illegible]

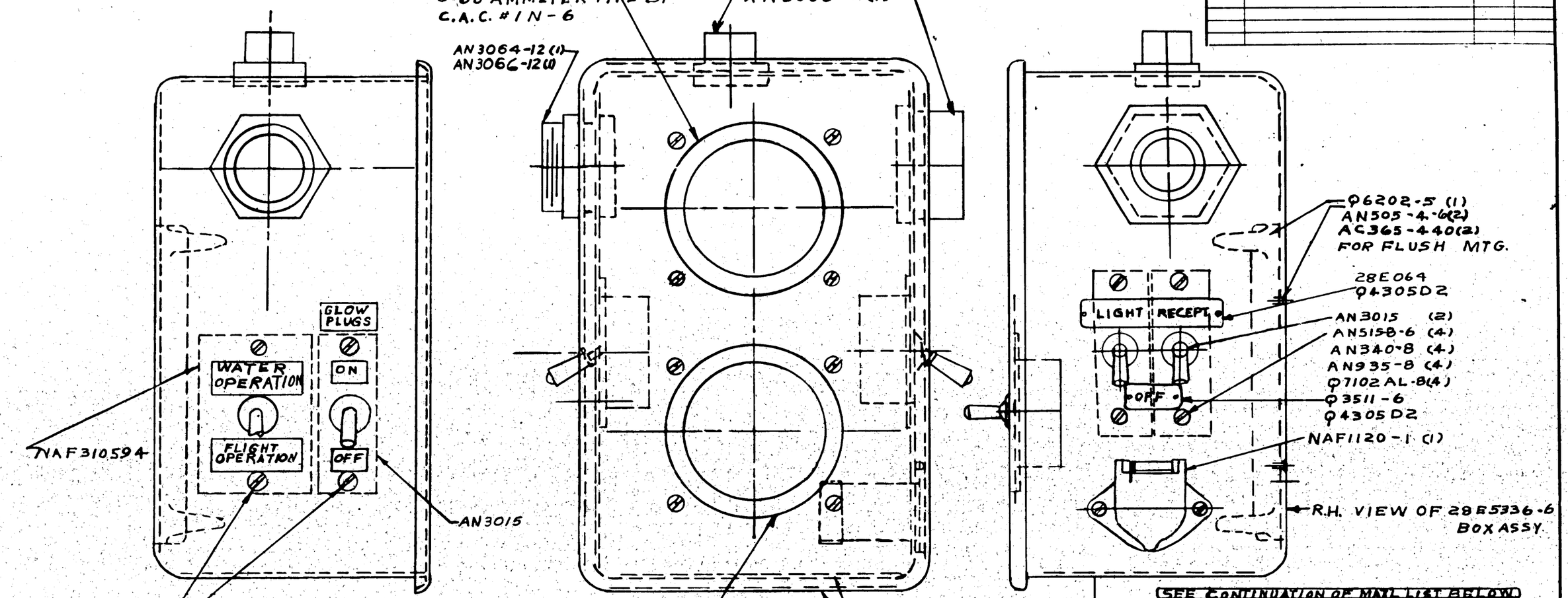

(SEE CONTINUATION OF MAT'L LIST BELOW)

PART No	STOCK	MATERIAL	SPEC.	H REQ	RH REQ	LH REQ	RH REQ	LH REQ	RH REQ	LH REQ	RH REQ	LH REQ	RH REQ
PARTS LIST PER ASSY.				-0		-2		-3		-4		-5	
WESTON MODEL 606 0-35 VOLTMETER C.A.C. IN-127													
WESTON MODEL 606 0-60 AMMETER C.A.C. IN-6													
28E064													
AN340-8													
AN515-8-6													
AN505-4-6													
AC365-440													
AN935-8													
Q7102AL-8													
AN3066-16													
AN3066-12													
AN3066-4													
AN3064-16													
AN3064-12													
AN3064-4													
Q6202-5													
NAF1120-1													
NAF310594													
AN3015													
Q43050-2													
Q3511-6													
28E5336-7													
28E5336-6													

CON. #91876 #90

CHG # 23(19)

ASSY. DASH No.	MODEL	NEXT ASSY.	REQ
	PBY-5	28E5332	1

REQUIREMENTS PER AIRPLANE

REPLACES — CALC. WT. 1.8#

REPLACED BY — ACT. WT.

CLIENT OR ENGINEERING UNLESS OTHERWISE SPECIFIED ± 1/32 — SCALE 12" = 1'0"

STAMP PART NUMBER WHERE SHOWN

AC — NAVY — HEAT TREAT — FINISH — DRAFT — CHECK — STRUCT — MAT — APPROV — ENG

NAME BOX ASSEM - ELEC. ANTI-ICER TAILSWITCH

OPP. HAND

CONSOLIDATED AIRCRAFT CORP. SAN DIEGO, CALIF.

DWG SIZE D — 28E5333

R 10-28 42

LET	ALTERATION	DATE	BY
A	CHG'D #18(.169)2 HOLES& 1/2 DIA. HOLE (-7 COVER ONLY) TO (-5 COVER ONLY) NOWT. CHG	11-26-42	CARR
B	REMOVED - 2 ASS'Y FROM DRW'G & MADE NEW DRW'G 28E5388 FOR 2 ASS'Y	12-2-42	FELS

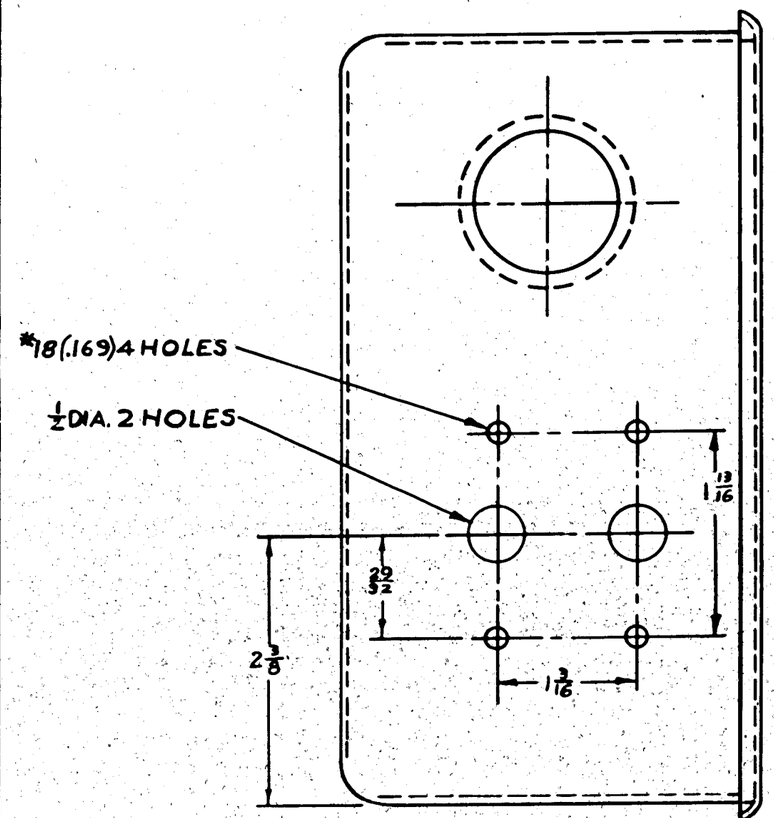

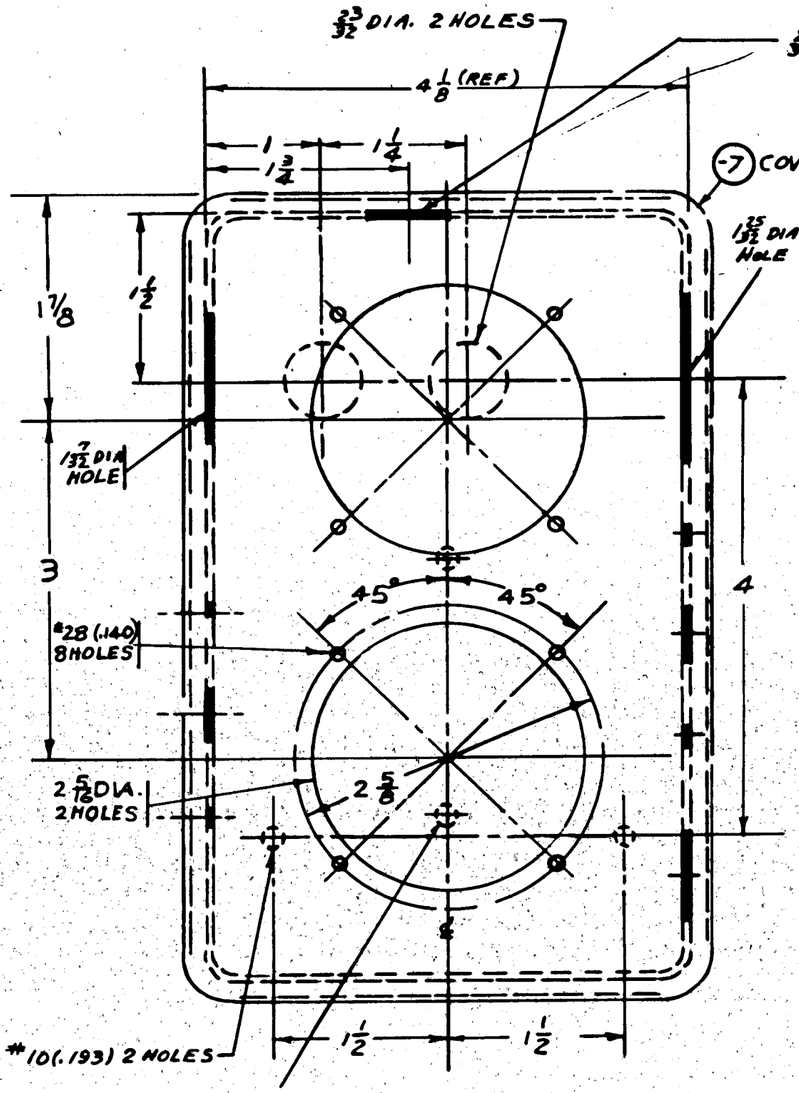

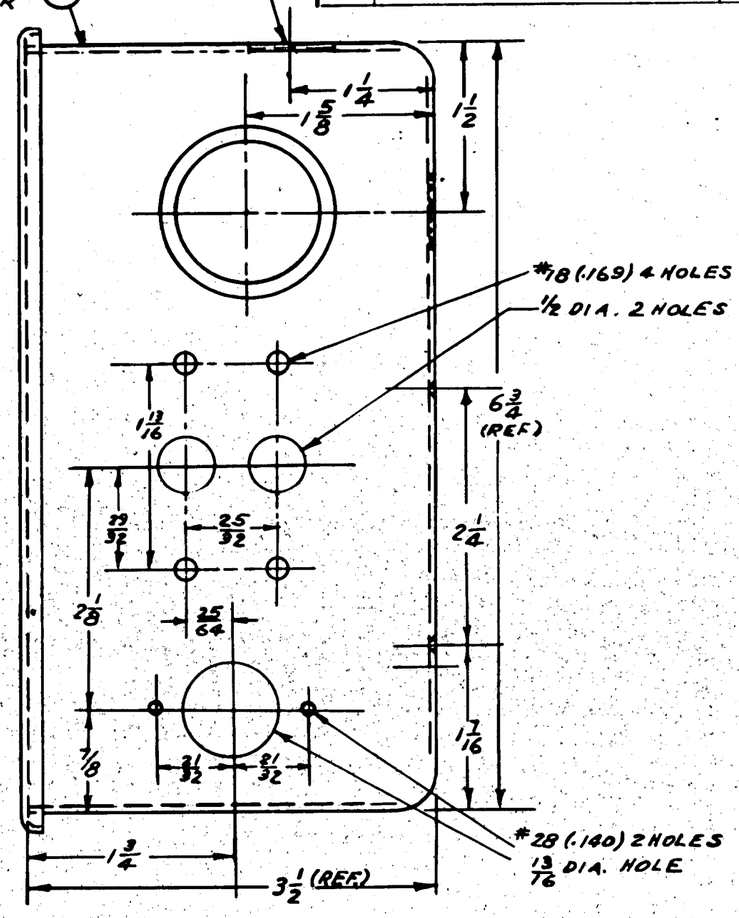

C #91876 - SHIP #90

CHG # 23(19)

NOTE:
(1) BOX & COVER MAY BE PURCHASED FROM MONARCH TOOL & INSTR. CO. BY ORDERING MT1111-316-0HR BOX & 1111CF-SW COVER OR FROM POULSEN & NARDON BY ORDERING 1256-316NBOX & 1256-35D COVER.
(2) BOX TO BE FURNISHED WITH TIGHT FITTING COVER, NON-LOSEABLE SCREWS & DUAL WASHERS
(3) REMOVE FINISH 3/32 RADIALLY AROUND CONDUIT HOLES.
(4) FINISH:- P-INSIDE, P-GP OUTSIDE

ASSY. DASH NO.	MODEL	NEXT ASSY.	REQ.
-7	PBY-5	28E5333	1
-6	PBY-5	28E5333	1

REQUIREMENTS PER AIRPLANE

REPLACES — CALC WT.

REPLACED BY — ACT. WT.

LIGHT OR DISCONNECTING UNLESS OTHERWISE SPECIFIED ± 1/32 — SCALE 12" = 1'0"

STAMP PART NUMBER WHERE SHOWN

-7 COVER } MAKE FROM CAC #BOX 46-316N
-6 BOX }

PART NO	STOCK	MATERIAL	SPEC.	LH REQ.	RH REQ.	LH REQ.	RH REQ.	LH REQ.	RH REQ.	LH REQ.	RH REQ.	LH REQ.	RH REQ.
PARTS LIST PER ASSY.				-0		-2		-3		-4		-5	

AC			10-5-42					
NAVY —	NOTE D							
HEAT TREAT	FINISH	DRAFT	CHECK	STRUCT	MAT	APPROV	ENG	

NAME BOX - ELEC. ANTI-ICER TAIL SWITCH

OPP. HAND

CONSOLIDATED AIRCRAFT CORP. SAN DIEGO, CALIF.

DWG. SIZE D — 28E5336

R

LET	ALTERATION	DATE	BY
A	28E5330-0[5]/R WAS 28E5330-6[5]/R (2 EA) NO WT. CHG.	1-5-43	BACKUP
B	ADDED "DC-PORT" & "DC. STBD." & MADE [3]/[8] "DECAL" NO WT. CHG.	2-9-43	BENNIE

Q
E.O.A 93594A
Q

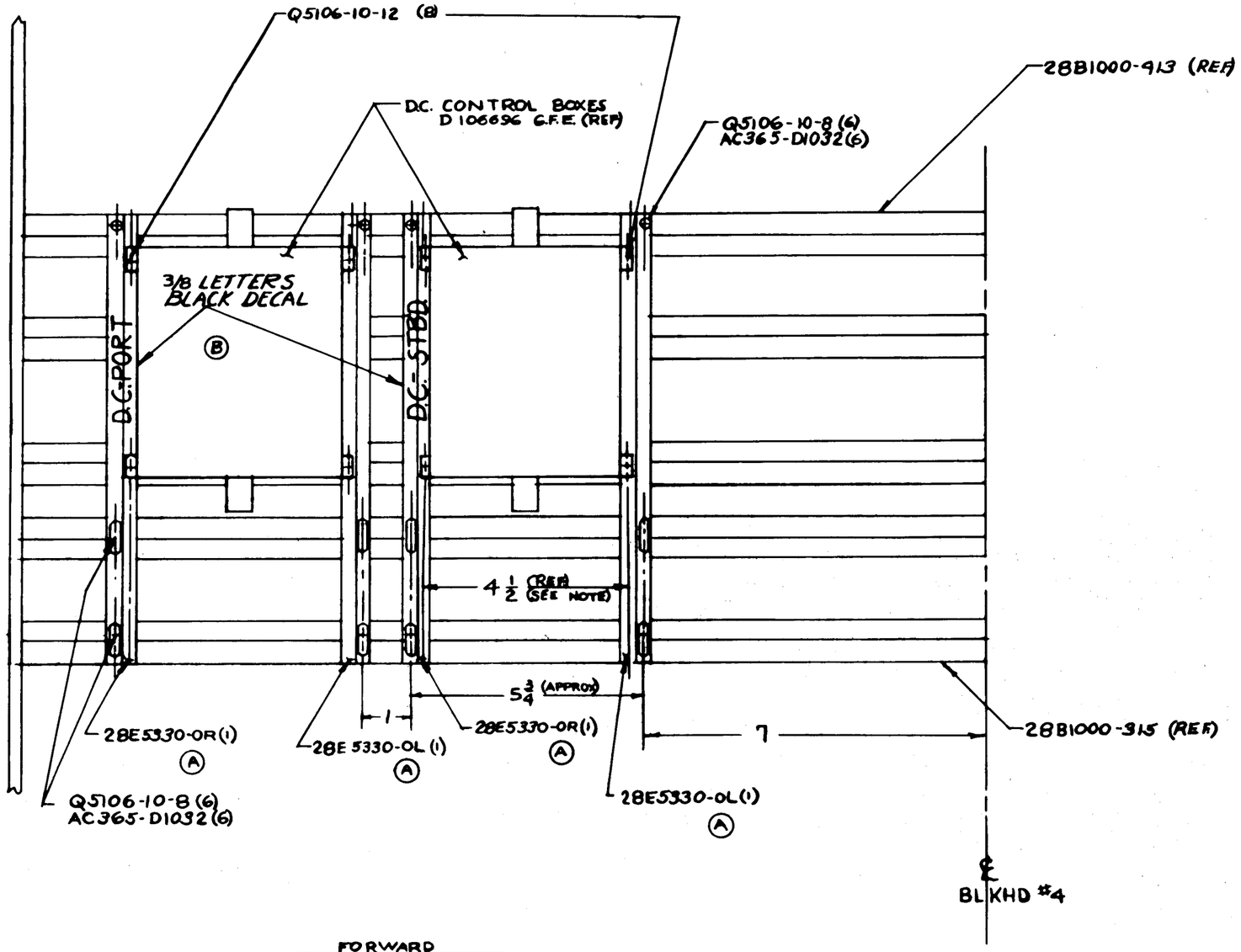

NOTE
JIG LOCATE TO MATCH CONTROL BOXES

FORWARD

VIEW LOOKING UP. STARBOARD SIDE

C13595
C#91876 #91 ON

CHG #89 (12)

ASSY DASH No.	MODEL	NEXT ASSY	DASH No.
	PBY-5A	28E4018	1
	PBY-5	28E4018	1

REQUIREMENTS PER AIRPLANE

REPLACES — Calc Wt.

REPLACED BY — Act. Wt.

Light on Engineering Unless Otherwise Specified ± 1/32 — SCALE 6" = 1'0"

STAMP PART NUMBER WHERE SHOWN

PART No	STOCK	MATERIAL	SPEC.	LH REQ. -0	RH REQ. -2	LH REQ. -3	RH REQ. -4	LH REQ. -5	RH REQ.
D106696	DC. REGULATOR BOXES		G.F.E.		2				
Q5106-10-12						8			
Q5106-10-8						12			
AC365-D1032						12			
28E5330-OR						2			
28E5330-OL						2			

PARTS LIST PER ASSY.

AC				
NAVY				
HEAT TREAT	FINISH	DRAFT	CHECK	STRUCT. MAT. APPROV. ENG.
		10/14/42	10/16/42	

NAME INSTAL. - BRACKET - ELEC. - DC. VOLTAGE REGULATOR

CONSOLIDATED AIRCRAFT CORP. SAN DIEGO, CALIF.

OPP. HAND —

DWG. D SIZE

28E5337

R 10-17-42

LET	ALTERATION	DATE	BY

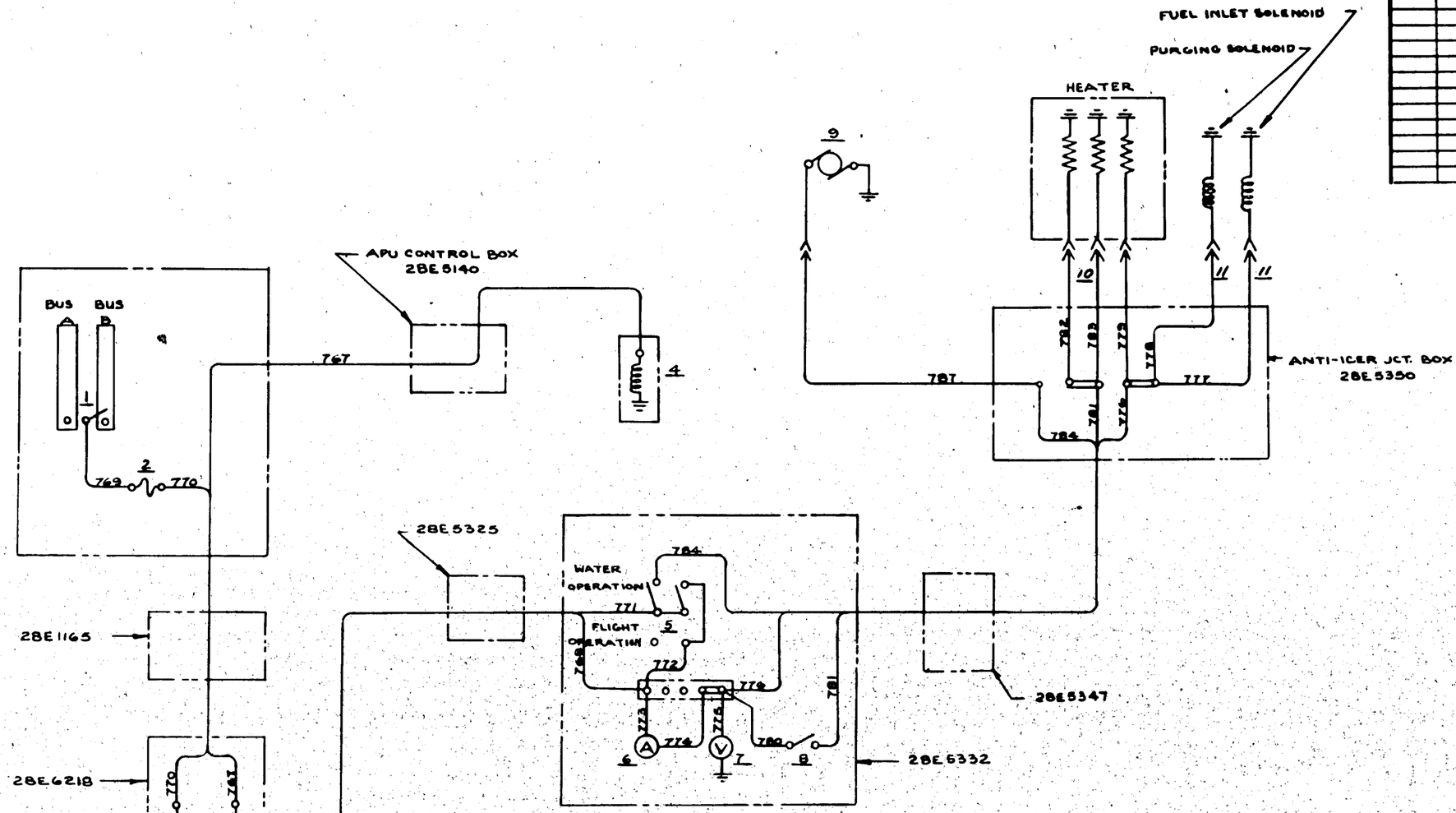

MATERIAL LIST

ITEM NO.	ITEM	MANUFACTURER	TYPE	DWG NO.	REQ.
1	MAIN SW. (S.P.D.T.)	CUTLER HAMMER MFG.CO. MILW. WIS.	B-9A	AN3018	1
2	FUSE - 80 AMP.	LITTLE FUSE CORP. CHICAGO, ILL.	HI-AMP #1234-80	C.A.C. #IN-128	1
3					
4	FUEL PUMP				1
5	CONTROL SW. (D.P.D.T.)	CUTLER HAMMER MFG.CO. MILW. WIS.	C-9A	NAF 310594	1
6	AMMETER	WESTON ELEC. CO. NEWARK, N.J.	B-1	C.A.C. #IN-6	1
7	VOLTMETER	" " " " "	C-1	C.A.C. #IN-127	1
8	SWITCH - GLOW PLUG	CUTLER HAMMER MFG.CO. MILW. WIS.	B-6A	AN3018	1
9	FAN MOTER				1
10	PLUG - GLOW PLUG	FURN. BY STEWART-WARNER MFG. CO.		AN3106-20-4S	1
11	PLUG - SOLENOID	" " " " " "		AN3106-10-2S	2
12					

WIRE TABLE

WIRE NO.	WIRE GA.	LENGTH IN FT.	TERMINAL
767			
768			
769	#4		
770	#4		
771	#4		
772	#8		
773	#8		
774	#8		
776	#20		
776	#14		
777	#20		
778	#20		
779	#14		
780	#12		
781	#12		
782	#14		
783	#14		
784	#8		
787	#8		

CONT. ON SHT. SHP #90

488V. SASH No.	PBY-5 MODEL	28E5050 NEXT ASSY.	1 QUAN.

REQUIREMENTS PER AIRPLANE

REPLACES — CALC. WT.

REPLACED BY — ACT. WT.

UNLESS OTHERWISE SPECIFIED — SCALE

STAMP PART NUMBER WHERE SHOWN

PART No.	STOCK	MATERIAL	SPEC.	LH RH REQ. -0	LH RH REQ. -2	LH RH REQ. -3	LH RH REQ. -4	LH RH REQ. -5
-6								

PARTS LIST PER ASSY.

A C		10/16/42	10/16/42	Gibson		Brown	
NAVY —	—						
HEAT TREAT	FINISH	DRAFT	CHECK	STRUCT	MAT	APPROV	ENG

NAME WIRING DIAGRAM - ELEC.
ANTI-ICER TAIL & TEST EQUIP.

CONSOLIDATED AIRCRAFT CORP. SAN DIEGO, CALIF.

OPP. HAND

DWG. SIZE D — 28E5341

R

LET	ALTERATION	DATE	BY
A	REMOVED ITEM 223 WIRES 767 & 784, ADDED ITEM 164 (223) WIRES 1123, 772, 773, & 774, ITEM 155 REPLACED BY ITEM 72.	2-1-43	MILLS
B	REMOVED ITEM 72, WIRES 772, 773, 774 & 771	2-2-43	MILLS
C	#4 LEAD WAS #782 NEG. WT. CAN	2-9-43	LAWN
D	LIMITED ORIGINAL CIRCUIT FOR HEATER GLOW PLUG & FUEL SOLENOID FOR SHIPS #346 TO 352 INCLUSIVE, ADDED CIRCUIT FOR GLOW PLUG & SOLENOID FOR SHIPS #353 & ON	2-9-43	LAWN
F	REMOVED WIRES 767, 768, 787 & 781 & PHANTOM VIEWS OF ARMA. FUEL PUMP & RAE 5748 (APU CONTROL BOX) WT. CAN NOT	7-7-43	DENNIS

E.O.A. 9683

SHIPS #346 TO 352 INCLUSIVE SEE NOTE 1

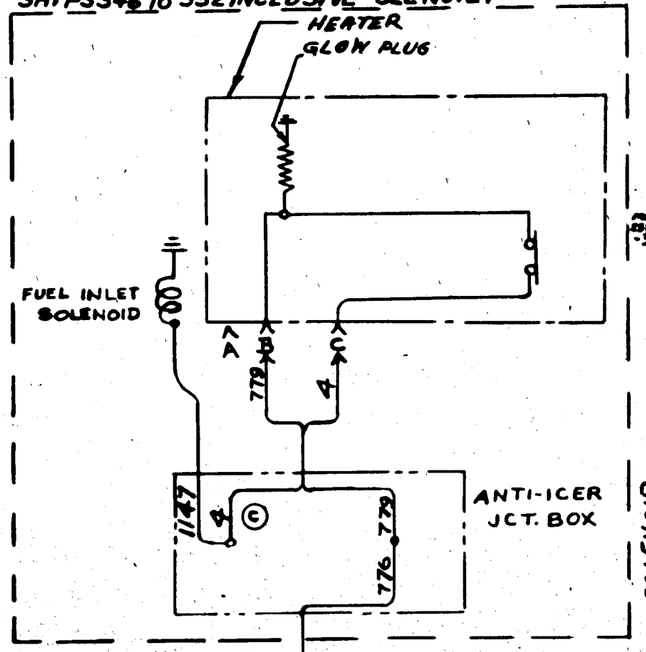

SEE NOTE 2
THIS PART USED FOR SHIPS #353 & ON

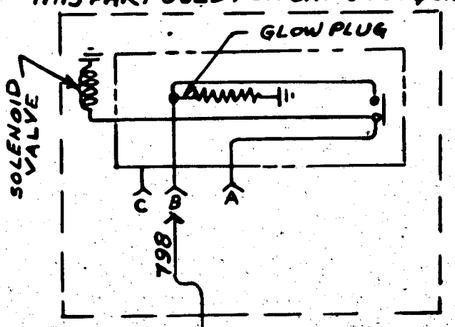

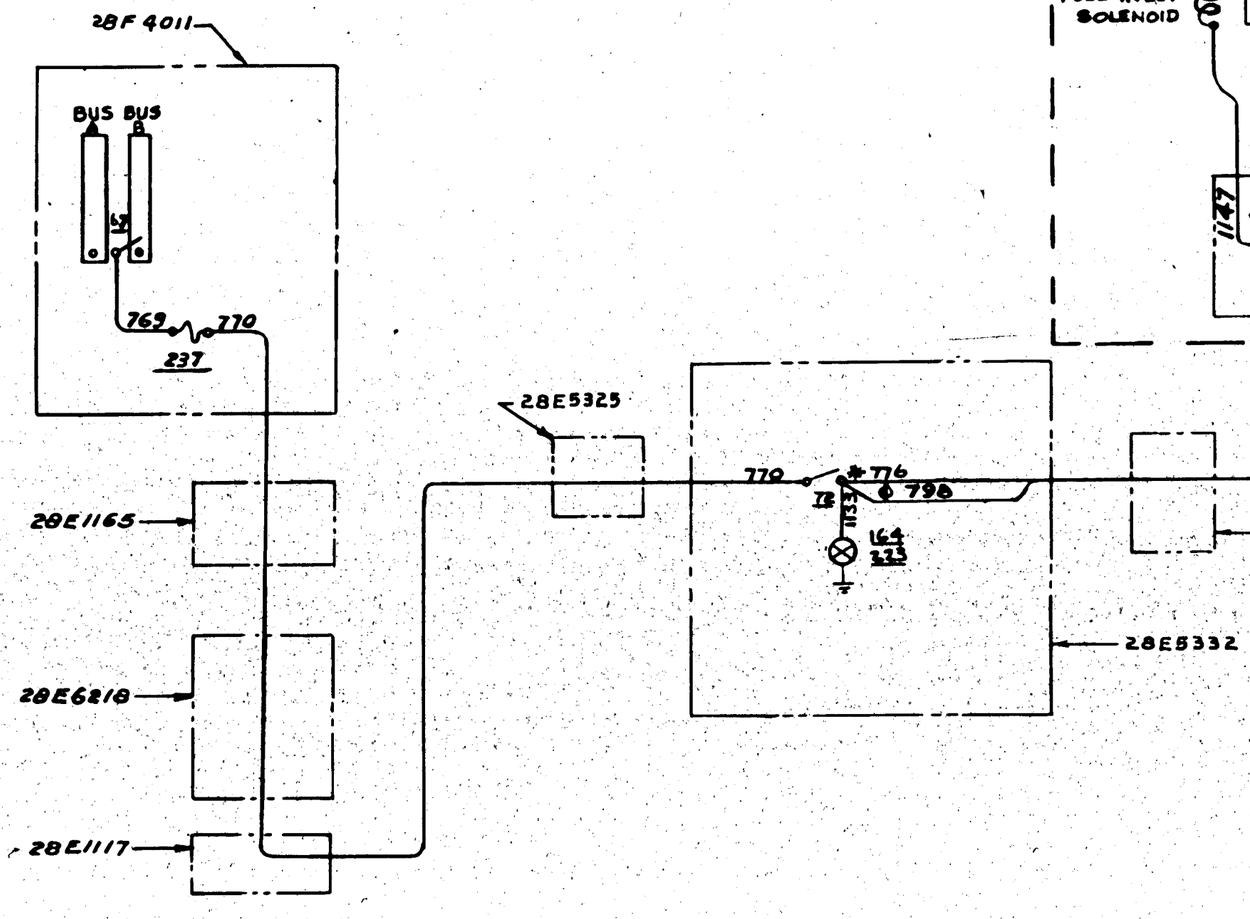

NOTE:- SEE 28E5322 FOR WIRE & EQUIPMENT TABLE.
1. * SHIPS #346 TO 352 INCLUSIVE
2. Φ SHIPS #353 & ON

CONT. #91876-CAC #23(19)
SHIPS 346-ON

ASSY. DASH NO.	MODEL	NEXT ASSY.	QUAN.
	PBY-5	28E5050	1

REQUIREMENTS PER AIRPLANE

REPLACES — CALC WT.

REPLACED BY — ACT. WT.

LIMIT ON DIMENSIONS UNLESS OTHERWISE SPECIFIED ± — SCALE

STAMP PART NUMBER WHERE SHOWN

PART NO	STOCK	MATERIAL	SPEC.	LH REQ.	RH REQ.	LH REQ.	RH REQ.	LH REQ.	RH REQ.	LH REQ.	RH REQ.	LH REQ.	RH REQ.
-0				-0		-2		-3		-4		-5	

PARTS LIST PER ASSY.

AC			DRAFT	CHECK	STRUCT	MAT	APPROV	ENG
NAVY								
HEAT TREAT	FINISH							

NAME WIRING DIAGRAM-ELEC.-ANTI-ICER-TAIL

OPP. HAND

DWG SIZE D

28E5342

CONSOLIDATED AIRCRAFT CORP. SAN DIEGO, CALIF

R

LET	ALTERATION	DATE	BY
A	IN B/M CREATED -BL &		
	-BR SUB ASSYS. NO WT. CHG	11-3-42	
B	APPED 40° & 65° CUT-OFFS		
	(NEG. WT. CHG.)	11-29-42	
C	IN B/M - 6L & -6R WERE "K9040 X16, 24ST AL. AL., 16A9 CONDT."		
	-7 WAS "K9040X19/0, 24ST AL. AL. EXT., 16A9 COND. T"		
	WT. CHG. NEG.	4-26-43	

E.O. A92294

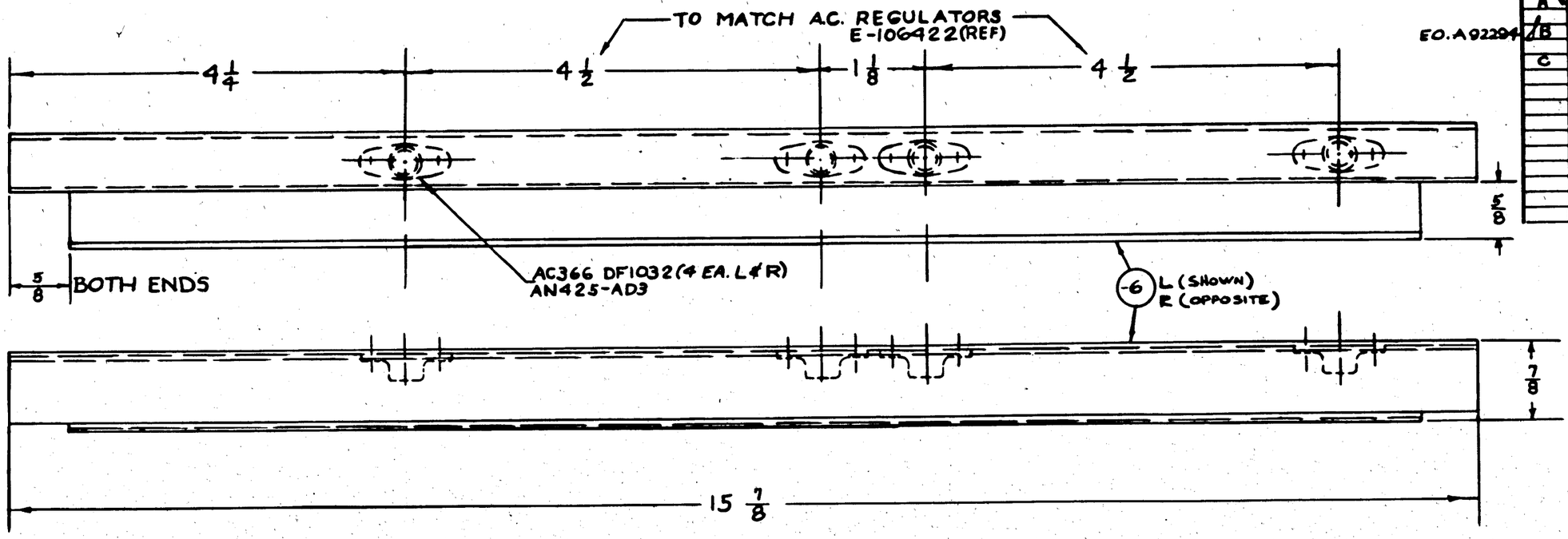

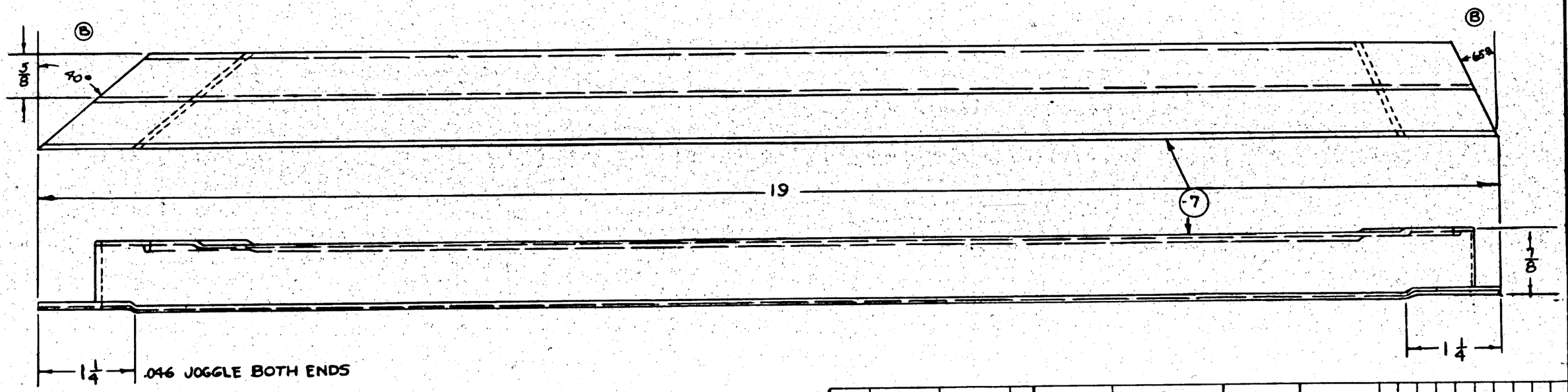

C#91876 # 914 ON

ASSY. DASH No.	MODEL	NEXT ASSY.	REQ.
-8R	PBY-5	28B1400	1
-8L	PBY-5	28B1400	1
-7	PBY-5	28B1400	1

REQUIREMENTS PER AIRPLANE

REPLACES — NOTED — CALC WT.

REPLACED BY — ACT. WT.

LIMIT OR DIMENSIONING UNLESS OTHERWISE SPECIFIED ± — SCALE 12" = 1'0"

STAMP PART NUMBER WHERE SHOWN

PART No	STOCK	MATERIAL	SPEC.	LH REQ.	RH REQ.	LH REQ.	RH REQ.	LH REQ.	RH REQ.	LH REQ.	RH REQ.
	AN425-AD3										
	AC366DF1032										
-6R	Y-ST-ABTX16 -8R SUB ASSY			1							
-6L	Y-ST-ABTX16 -8L SUB ASSY				1						
-7	Y-ST-ABTX19/0					1					
-8R	SUB ASSY							1			
-8L	SUB ASSY								1		

PARTS LIST PER ASSY.

AC — NAVY — HEAT TREAT — FINISH

Crain 10-16-42 10-19-42

DRAFT — CHECK — STRUCT — MAT — APPROV

OPP. HAND

NAME BRACKET - A.C. REGULATOR

CONSOLIDATED AIRCRAFT CORP. SAN DIEGO, CALIF.

DWG. SIZE D — 28E534

NOTE:
WT-6 = .1809
WT-7 = .2166

C.R. 22017
C.R. 22415

LET	ALTERATION	DATE	BY
A	CHGD LOCATION OF HOLE FOR CONDUIT. 1/2 DIM. WAS 1. NO WT. CHG.	5-6-43	
B	ADDED 1/8 DRAIN HOLE TO -7 ALSO W/O #1 3/8 DIMS. WT. CHG NEG.	5-6-43	

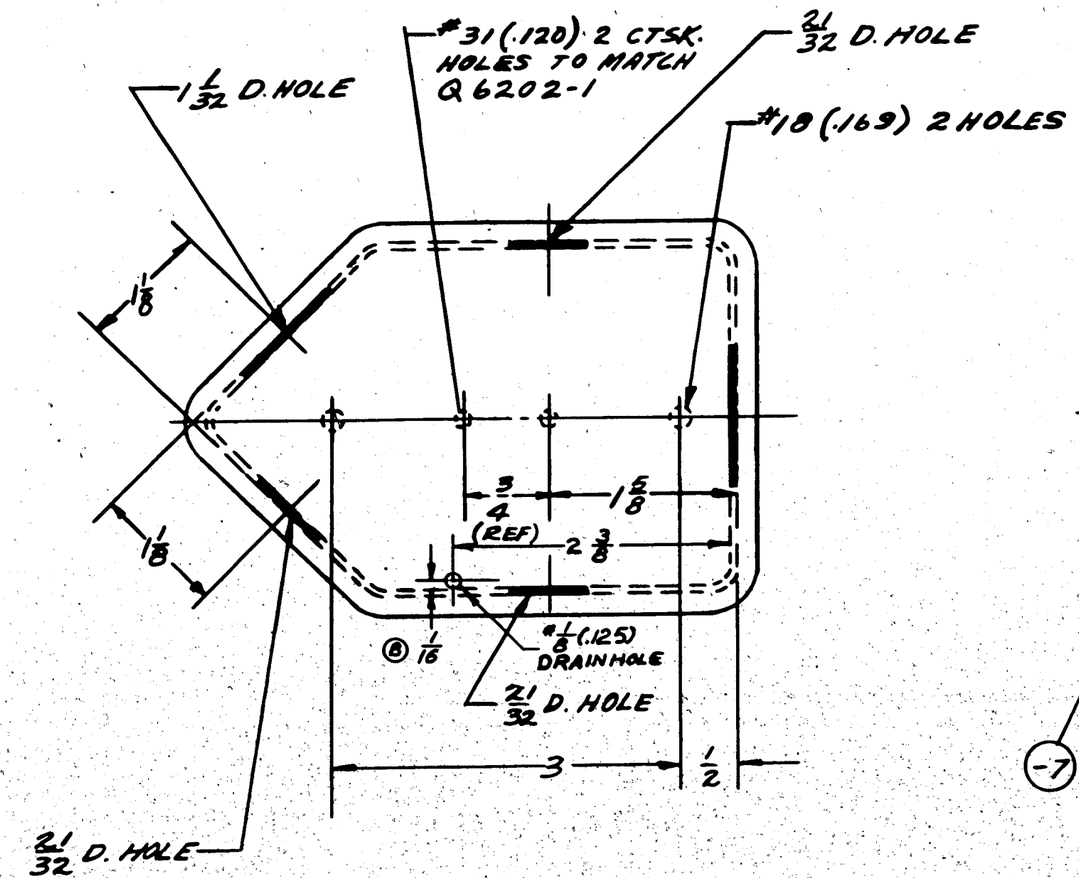

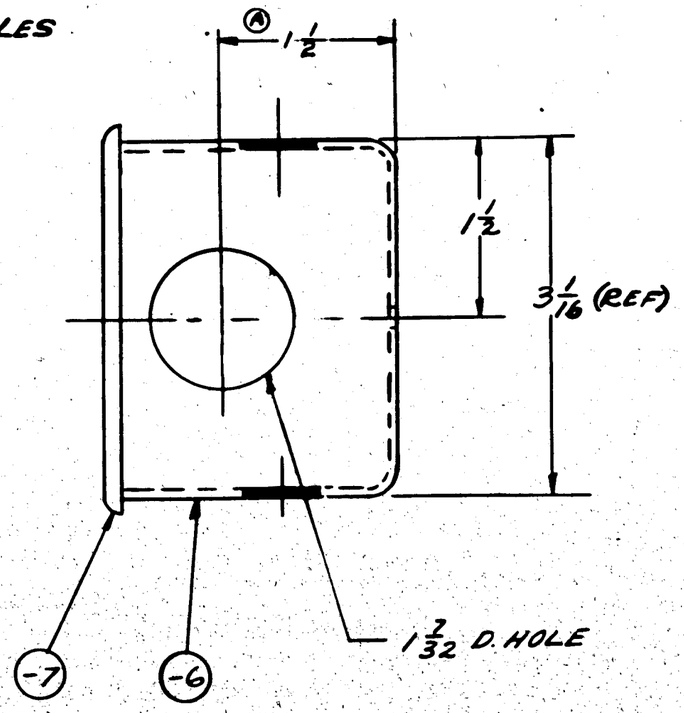

NOTES:
1. FINISH P-INSIDE P-GP OUTSIDE
2. REMOVE FINISH 3/32 RADIALLY AROUND CONDUIT HOLES

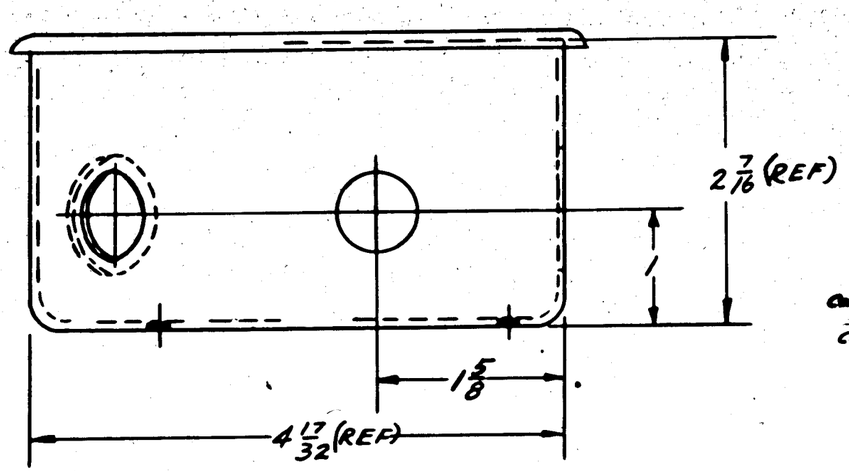

NOTE
THIS BOX REPLACES 28E1119-2 FOR CAC #23(19)

ASSY. DASH No.	MODEL	NEXT ASSY.	QTY.
-0	PBY-5A	28E5346	1
-0	PBY-5	28E5346	1

NOTE(S) 464 CHGD SHEETS SHIPS 346 - ON CHG No 23(19)

REQUIREMENTS PER AIRPLANE

REPLACES: SEE NOTE — .50 CALC. WT.
REPLACED BY — ADV. WT.

SCALE: 12" = 1'-0"

STAMP PART NUMBER WHERE SHOWN

PART No.	STOCK	MATERIAL	SPEC.	LH REQ.	RH REQ.	LH REQ.	RH REQ.	LH REQ.	RH REQ.	LH REQ.	RH REQ.	LH REQ.	RH REQ.
-7	COVER	MAKE FROM											
-6	BLK	NAF 1128-3											
PARTS LIST PER ASSY.				-0	-2	-3	-4	-5					

AC
NAVY NONE — NOTED
HEAT TREAT — FINISH

DRAFT	CHECK	STRUCT	MAT	APPROV	ENG.
11-7-42	10-30-42	Ritter		Jones	
GAH 12-8	Mills		10-27-42		MW

NAME BOX-ELEC-BLKHD. & JUNCTION
CONSOLIDATED AIRCRAFT CORP. SAN DIEGO, CALIF.

OPP. HAND
DWG. SIZE D
28E5345

R

LET	ALTERATION	DATE	BY
	FL.R 23043		
A	IN A/N ADDED 28E5352 TO FACE ADDED NOTE "SHELLAC --- SHELLAC" NO WGT CHG	4-12-43	Wright
B	ADDED PAY-5A PARTS & CHG'D LIMIT ON PAY-5 FROM "90 & 2610 ON TO "90 & 3466 ON. ADDED ACT. WT. .48# NO WT CHG.	4/17/43	Wright
	MCR 390		
C	ADDED STENCIL & NOTE "STENCIL --- COVER" ALSO DIMS: 3/16 (TYP) & 3/8. NO WT CHG	5/6/43	Wright

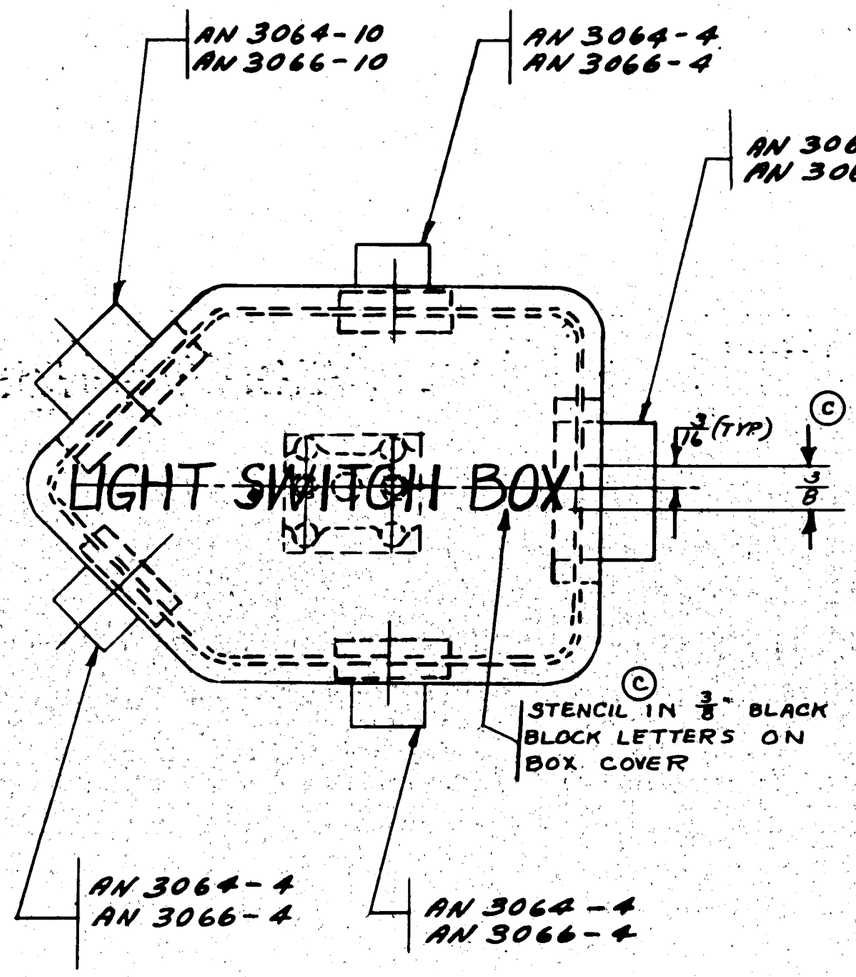

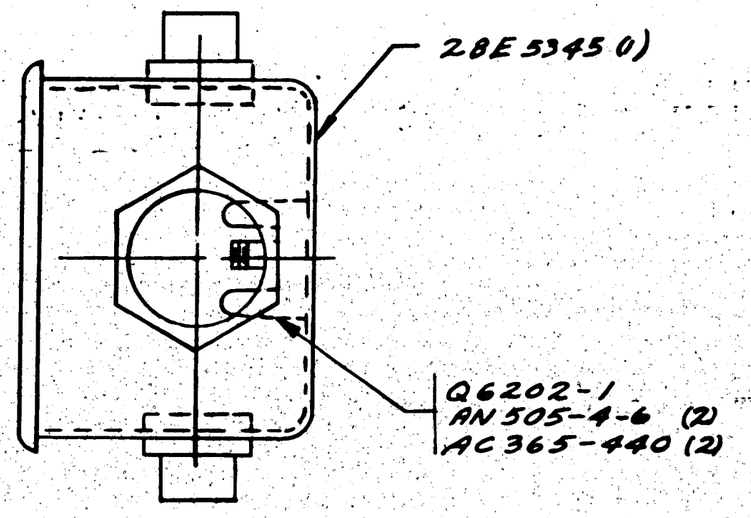

Ⓐ NOTE:
SHELLAC 28E5352 TO INSIDE OF 28E5345-7 COVER & COVER WITH SHELLAC.

C# NO. (S) 464
CON. 2NB 76 SHIP # 906
346-ON, CAC 23 (19)

ASSY. DASH No.	MODEL	NEXT ASSY.	REQ'D
-0	PAY-5A	28E5347	1
-0	PAY-5	28E5347	1

REQUIREMENTS PER AIRPLANE

REPLACES — CALC WT.

REPLACED BY — .48# ACT. WT.

UNLESS OTHERWISE SPECIFIED: + 1/32 — SCALE 12" = 1'-0"

STAMP PART NUMBER WHERE SHOWN

PART No.	STOCK	MATERIAL	SPEC.	LH REQ. -0	RH REQ. -0	LH REQ. -3	RH REQ. -4	LH REQ. -5	RH REQ.
AC 365-440				2					
AN 505-4-6				2					
Q 6202-1				1					
AN 3066-12				1					
AN 3066-10				1					
AN 3066-4				3					
AN 3064-12				1					
AN 3064-10				1					
AN 3064-4				3					
28E 5352				1					
28E 5345				1					

PARTS LIST PER ASSY.

AC			10-17-42	Tom/ca	Lehn		Brown				
NAVY NONE	NONE		GALLEIA								
HEAT TREAT	FINISH	DRAFT	CHECK	STRUCT	MAT	APPROV	ENG.				

NAME BOX ASSY-ELEC-BLKHD & JUNCTION

CONSOLIDATED AIRCRAFT CORP. SAN DIEGO, CALIF.

OPP. HAND

SIZE D — 28E5346

A

28E5346

EQ A96693
MCR178-17 & 23-19
EQ B2687

LET	ALTERATION	DATE	BY
A	1 1/32 HOLE WAS 1 3/32 REMOVED		
	3/32 DIA. HOLE. (NEG. WT. CHG)	2-10-43	[illegible]
B	ADDED 1/32 DIA. HOLE FOR -7 BOX		
	ONLY (NEG. WT. CHG.)	2-10-43	[illegible]
C	1/32 DIA. HOLE WAS 11/32. (NEG. WT. CHG.)	3-11-43	HLAHAN
D	IN REQUIREMENTS PER AIRPLANE		
	#346-#362 INCL. WAS #346 ON		
	NO WT. CHG.	3-11-43	HLAHAN
E	REMOVED REQ FOR PBY-5A PER		
	MCR 178-D	3-11-43	HLAHAN

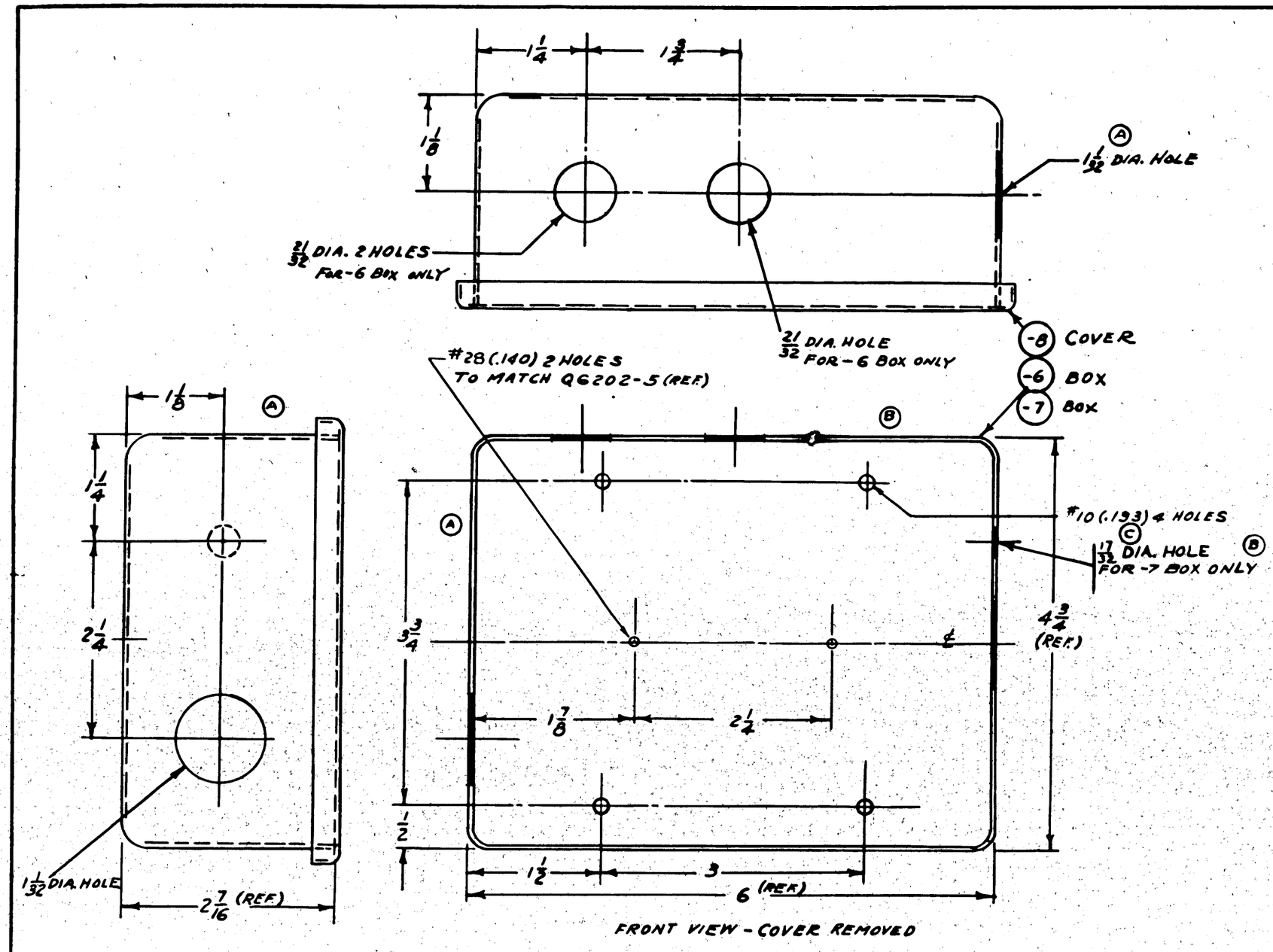

FRONT VIEW - COVER REMOVED

NOTES:
(1) BOX & COVER MAY BE PURCHASED FROM MONARCH TOOL & INSTR. CO. BY ORDERING MT-1010-214 BOX & CP 1010 COVER - OR FROM POULSEN & HARDON CO. BY ORDERING P & N 1244-214 BOX & 1244-1 COVER
(2) BOX TO BE FURNISHED WITH TIGHTFITTING COVER, NON-LOSEABLE STEEL SCREWS & DURAL WASHERS
(3) REMOVE FINISH 3/32 RADIALLY AROUND CONDUIT HOLES.
(4) FINISH. P-INSIDE P-GP OUTS

(E) C.#91876 #346-352 PER MCR23-B
CONT. #91876 - SHIP #90

ASSY DASH NO.	MODEL	NEXT ASSY.	REQ.
-8	PBY-5	28E5348	1
-7	PBY-5	28E5349	1
-8	PBY-5	28E5349	1
-6	PBY-5	28E5349	1

REQUIREMENTS PER AIRPLANE

REPLACES — CALC WT. .70
REPLACED BY — ACT WT.
TOLERANCE ON DIMENSIONS UNLESS OTHERWISE SPECIFIED ± 1/32
SCALE 12" = 1'0"
STAMP PART NUMBER WHERE SHOWN

PART NO	STOCK	MATERIAL	SPEC.	LH REQ. -0	RH REQ. -2	LH REQ. -3	RH REQ. -4	LH REQ. -5	RH REQ.
	-7 BOX } MAKE FROM CAC BOX 43-214N								
	-8 COVER }								
	-6 BOX								

PARTS LIST PER ASSY.

A.C.		10/17/42	10-21-42 [illegible]	
NAVY —	NOTED	MAR 6 1943	[illegible]	
HEAT TREAT	FINISH	DRAFT	CHECK	STRUCT. MAT. APPROV. ENG.

NAME BOX - ELEC. - ANTI-ICER JUNCTION
OPP. HAND
CONSOLIDATED AIRCRAFT CORP. SAN DIEGO, CALIF.
DWG SIZE D
28E5348

R

LET	ALTERATION	BY	CK	BY
	E.O. A96692			
A	REMOVED AN3066-8(1) & AN 3066-8(1). REPLACED AN3064-12(1) & AN3066-8(1) WITH AN3064-10(1) & AN3066-10(1). ADDED DIM. D10-B(4) 1.17" WAS 1.22".	3-12-43		
	E.O. B 2011			
B	ADDED AN3064-3(1) & AN 3066-3(1) FOR -2 ASSY. K9008X6½ WAS K9008X9½. REMOVED DIM. 9½, 1½, 1½ & 12½. ADDED DIM. 1.886 WT. CHG. NEG.	3-12-43		
	F.L.R. 16886			
C	LISTED -2 ASSY FOR SHIPS #261 TO 382 INCL. WAS #261 & ON NO WT. CHG.	9-28-43		
D	FOR -6 IN B/M REPLACED "K9008 16½, 24ST. AL. AL. 164 CANTT" WITH "Y-37-ABRT-6½". WRONG	9-22-44		

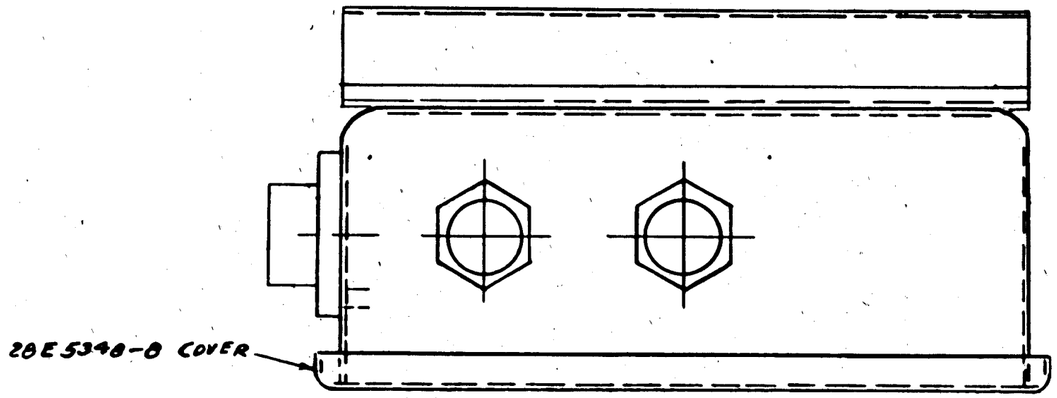

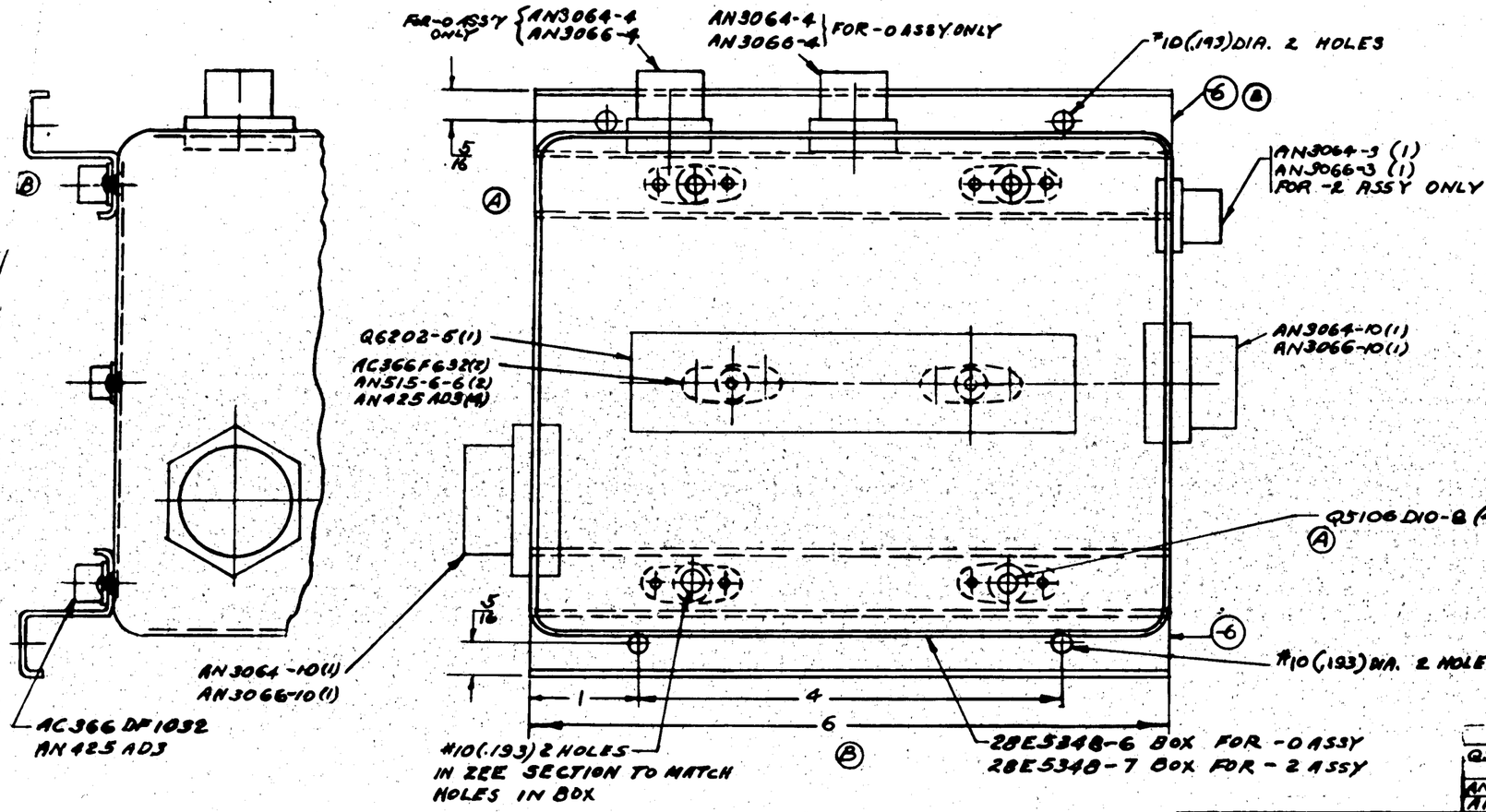

© C. 91876 346-352 PER. MCR 23-B
CONT. #91876 #90 SHIP

NOTES:
1. FINISH FOR -6, RGP

ASSY. DASH NO.	MODEL	NEXT ASSY.	QUAN.
2	PBY-5	28E5350	1
0	PBY-5	28E5350	1

REQUIREMENTS PER AIRPLANE

REPLACES
REPLACED BY
A.I.T. CALC. WT.
ACT. WT.

LIST ON ENGINEERING UNLESS OTHERWISE SPECIFIED: 102
SCALE: 12" = 1'0"
STAMP PART NUMBER UNDER AS SHOWN

PART NO	STOCK	MATERIAL	SPEC.	LH REQ. -0	RH REQ. -2	LH REQ. -3	RH REQ. -4	LH REQ. -5	RH REQ.
	Q5106 D10-8			4	4				
	AN3066-10			2	2				
	AN3064-10			2	2				
	AN425AD3								
	AC366DF1032			2	2				
	AN515-6-6			2	2				
	AC366F-632			2	2				
	Q6202-5			1	1				
	AN3066-3				1				
	AN3064-3				1				
	AN3066-4			2					
	AN3064-4			2					
	28E5348-8			1	1				
	28E5348-7				1				
	28E5348-6			1					
-6	Y-37-ABRT-6½			2	2				

PARTS LIST PER ASSY.

A.C.											
NAVY	—	—									
HEAT TREAT	FINISH	DRAFT	CHECK	STRUCT	MAT	APPROV	ENG.				

NAME: BOX ASSY - ELEC. ANTI-ICER JUNCTION
CONSOLIDATED AIRCRAFT CORP. SAN DIEGO, CALIF.
OPP. HAND
DWG. SIZE: D
28E5349

R

LET	ALTERATION	DATE	BY
A	IN REQUIREMENTS PER AIRPLANE LIMITED -2435 Y TO #346 - #352 INCL WAS. #261 E OVE. NO. WT. CHG.	3-13-43	H.L.Smith
	REMOVE PBY-5A BOATS	"	"

LOWER FIN FRONT DIAGONAL PORT SIDE

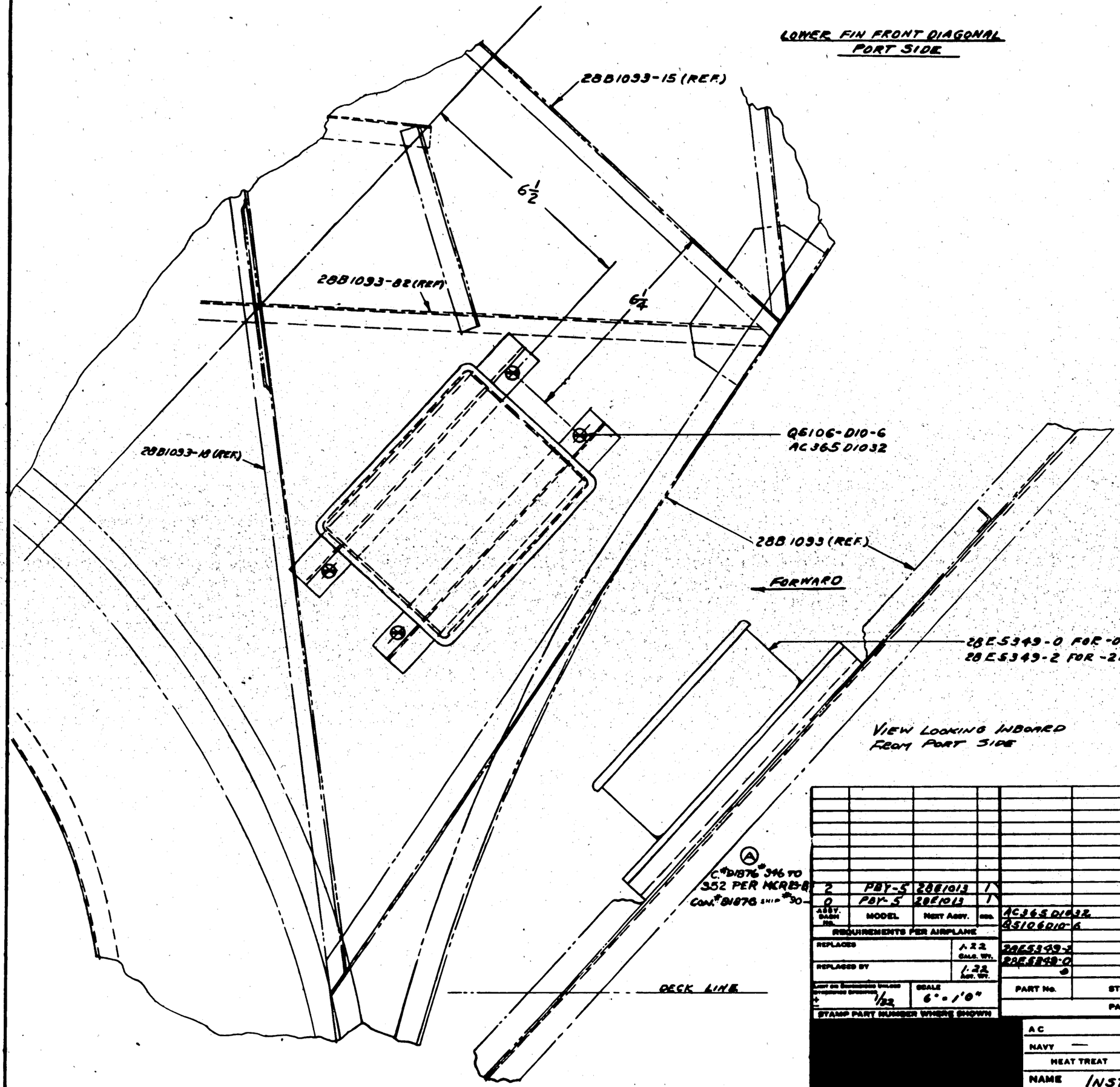

ASSY. SERIAL NO.	MODEL	NEXT ASSY.	SERIAL
2	PBY-5	28E1013	
0	PBY-5	28E1013	

REQUIREMENTS PER AIRPLANE

REPLACES	A.22 GALS. WT.
REPLACED BY	1.32 GALS. WT.

SCALE 6" - 1'0"

STAMP PART NUMBER WHERE SHOWN

PART No.	STOCK	MATERIAL	SPEC.	LH REQ.	RH REQ.	LH REQ.	RH REQ.	LH REQ.	RH REQ.	LH REQ.	RH REQ.	LH REQ.	RH REQ.
PARTS LIST PER ASSY.				-0	-2	-3	-4	-5					
AC365D1032				1	1								
Q5106D10-6				1	1								
28E5349-2					1								
28E5350-0				1									

AC		7/24/42			
NAVY —	—				
HEAT TREAT	FINISH	DRAFT	CHECK	STRUCT	MAT	APPROV	ENG.
		9-8-42	[illegible]				
		[illegible]		DIV	3-13-43		

NAME INSTALL - ELEC. ANTI-ICER JUNCTION BOX

OPP. HAND

CONSOLIDATED AIRCRAFT CORP. SAN DIEGO, CALIF.

DWG. SIZE D

28E5350

R

LET	ALTERATION	DATE	BY
A	ADDED [illegible] NO. ART CASE	2-6-43	[illegible]
B	ADDED -9 Dwg. E-28-2062		
	TER ASSEMBLY FOR PBY-5A, NAV		
	ATTY. REF 206.2 (1 PA 000) WT. CAS. AREA.	5-17-43 DOUBLE	

MCR 254-5

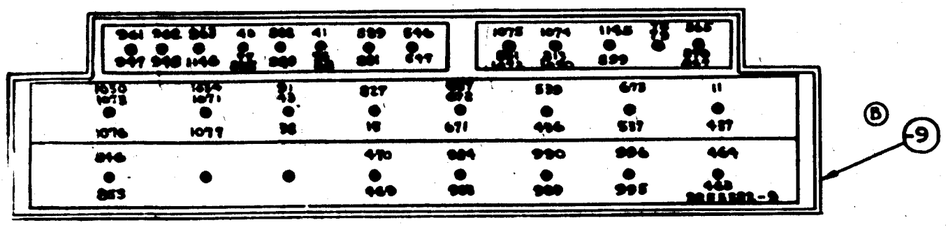

⑨ -9

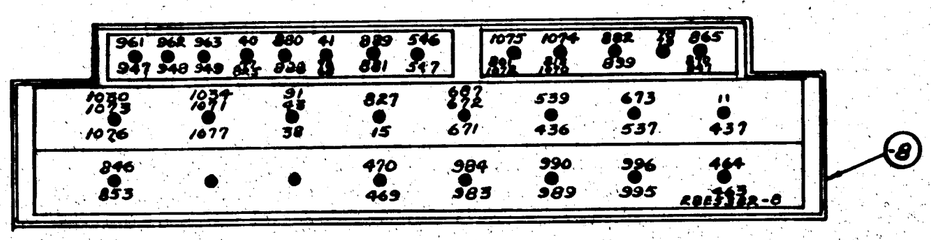

⑧ -8

NOTE:
CUT OUT & CEMENT -6, -7, -8, & -9 TO INSIDE OF BOX COVER 28E 2062 (REF)

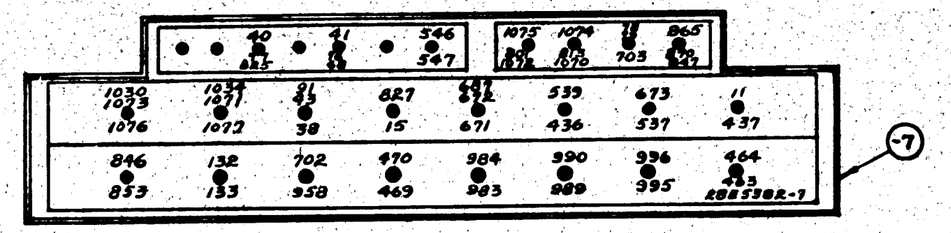

-7

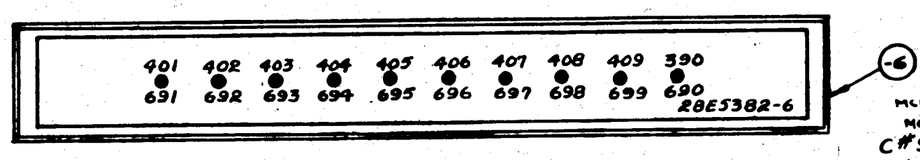

-6

MCR 254-SNO 1 (S) 464
MCR 254-SNO 2 (S) 464
C#91876 #346 ON
C#91876 #91-345
C#91876 #91 ON

ASSY. DASH NO.	MODEL	NAVY ASSY.	QUAN.
-9	PBY-5A	28E2062	1
-6	PBY-5A	28E2062	1
-8	PBY-5	28E2062	1
-7	PBY-5	28E2062	1
-6	PBY-5	28E2062	1

REQUIREMENTS PER AIRPLANE

REPLACES 28E5382 OF 7/11/42 — GAGE WT.
REPLACED BY — ADD. WT.
LIST OR DRAWING UNLESS OTHERWISE SPECIFIED — SCALE
STAMP PART NUMBER WHERE SHOWN

PART No.	STOCK	MATERIAL	SPEC.	LH REQ. -0	RH REQ. -2	LH REQ. -3	RH REQ. -4	LH REQ.
PARTS LIST PER ASSY.								

A C
NAVY BLUE PRINT
HEAT TREAT — FINISH — DRAFT: King — CHECK: [illegible] — STRUCT: [illegible] — MAT — APPROV

NAME IDENTIFICATION - ELEC - YOKE JUNCTION BOX
CONSOLIDATED AIRCRAFT CORP. SAN DIEGO, CALIF.
OPP. HAND
SIZE D — DWG. 28E5382

APPROVED FOR TOOLING BY V Bursum 3-5-43

R 11/25 42

LET	ALTERATION	DATE	BY

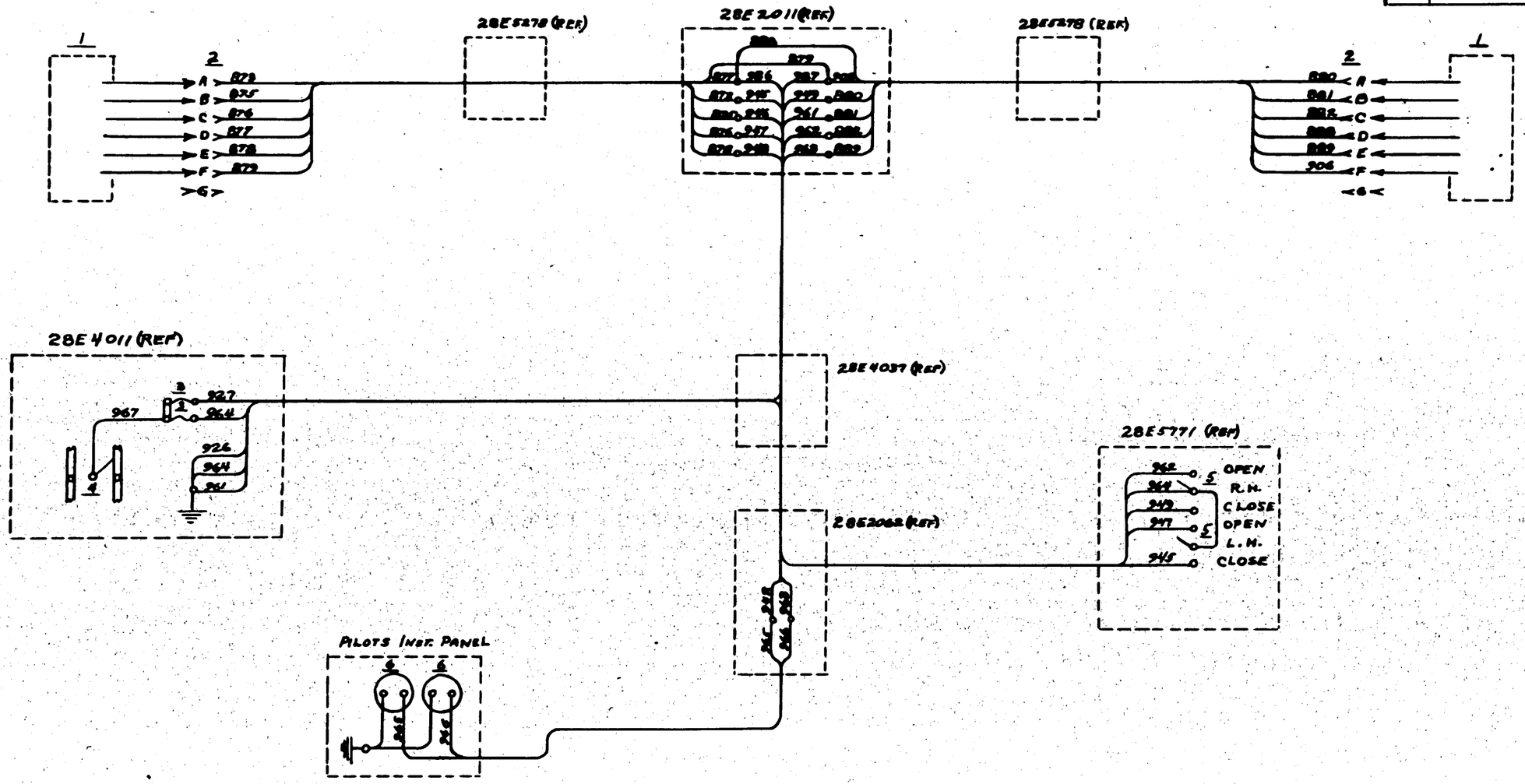

MATERIAL LIST

ITEM NO.	ITEM	MANUFACTURER	TYPE	DRAWING	REQ
1	ACTUATOR	LEAR AVIA	A-A-10		2
2	PLUG	CANNON ELEC. DEVEL. Co. L.A, CALIF.		AN3106-16S-1S	2
3	FUSE 5 AMP	LITTLE FUSE CORP. CHICAGO, ILL.	4 AG	NAF1034-4-5	2
4	SWITCH SPDT.	CUTLER-HAMMER. MILWAUKEE, WIS	B-11	AN3019	2
5	SWITCH SPDT	CUTLER-HAMMER, MILWAUKEE, WIS	B-9A	AN3018	1
6	VOLTMETER	WESTON-ELEC. INST., Co., NEWARK NJ.	0-30	NAF1091E-30	2

C.9/1876
SHIP #90

WIRE TABLE

WIRE No.	873	874	875	876	877	878	879	880	881	882	883	884	885	900	926	927	945	946	947	948	949	961	962	963	964	965	966	967
GA.	18	18	18	18	18	18	18	18	18	18	18	18	18	18	18	18	18	18	18	18	18	18	18	18	18	18	18	18

ASSY. DASH NO.	MODEL	NEXT ASSY.	REQ.
	PBY-5	28E5050	1

REQUIREMENTS PER AIRPLANE

REPLACES — CALC WT.

REPLACED BY — ACT WT.

SCALE

STAMP PART NUMBER WHERE SHOWN

PART NO.	STOCK	MATERIAL	SPEC.	LH REQ. -0	RH REQ. -0	LH REQ. -2	RH REQ. -2	LH REQ. -3	RH REQ. -3	LH REQ. -4	RH REQ. -4	LH REQ. -5	RH REQ. -5
PARTS LIST PER ASSY.													

AC		4/4/42					
NAVY							
HEAT TREAT	FINISH	DRAFT	CHECK	STRUCT	MAT	APPROV	ENG

NAME WIRING DIAGRAM -ELEC- ANTI ICER ACTUATOR

CONSOLIDATED AIRCRAFT CORP. SAN DIEGO, CALIF.

OPP HAND

DWG SIZE D

28E5383

R

LET	ALTERATION	DATE	BY

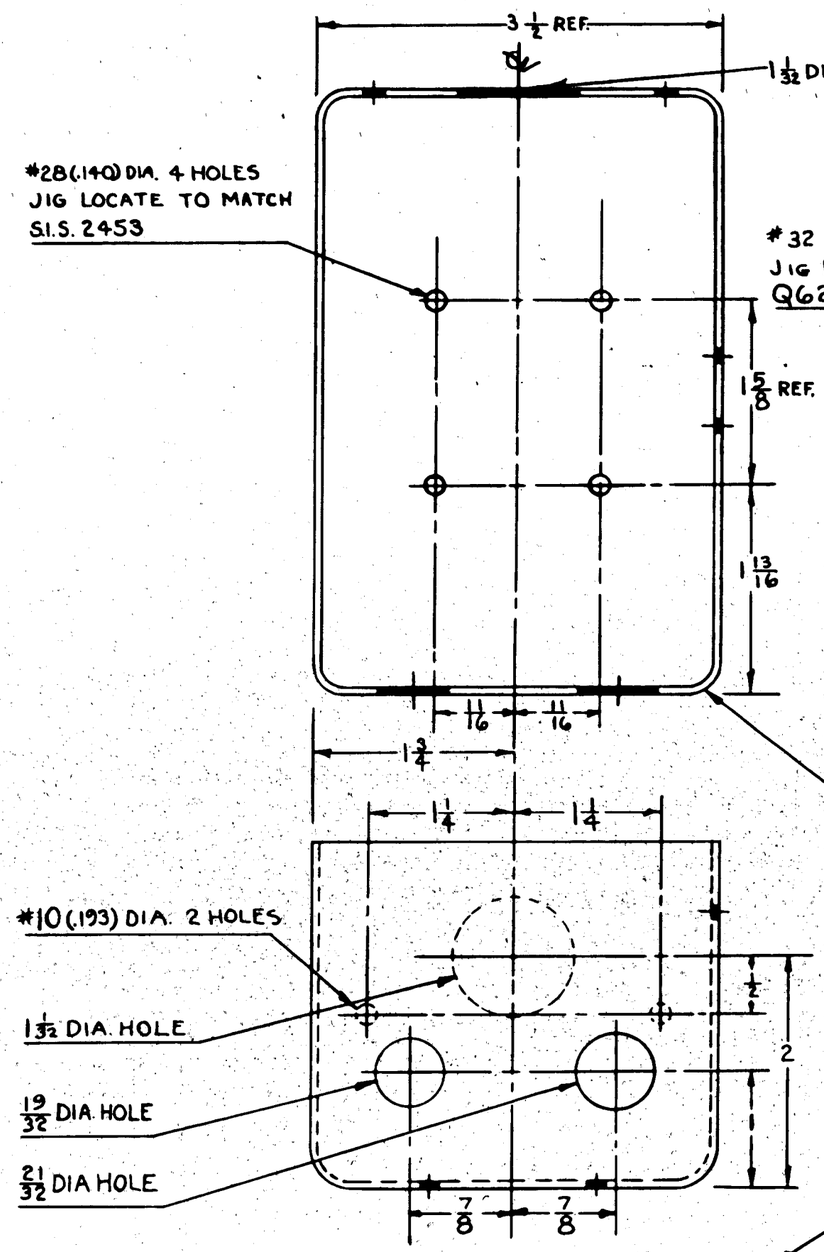

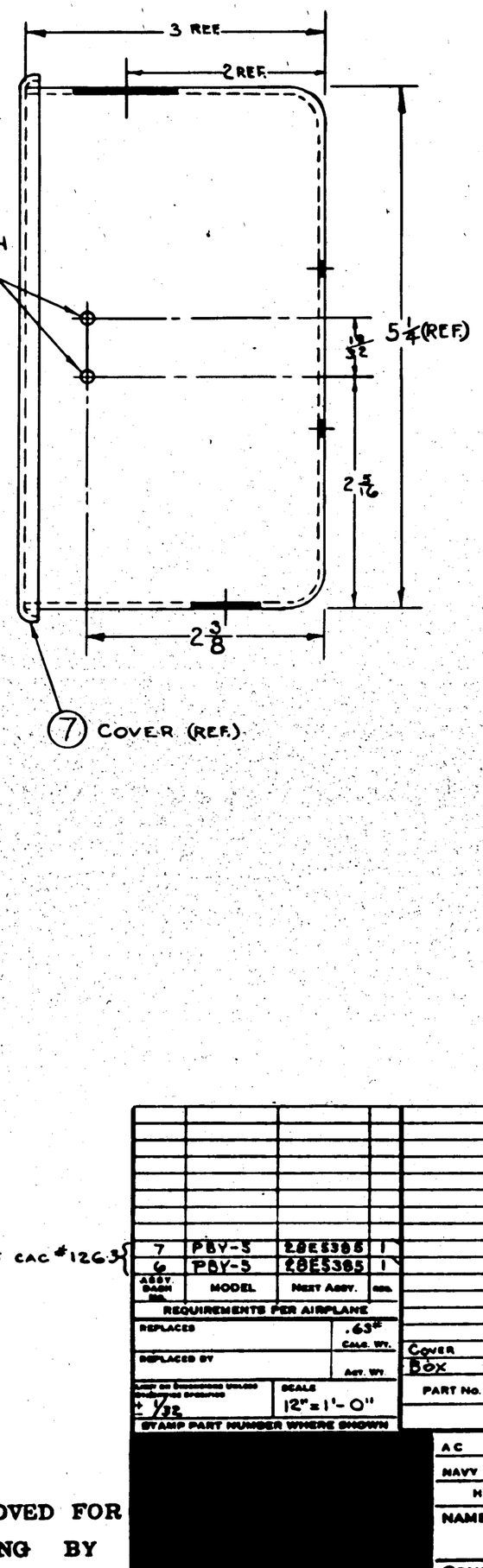

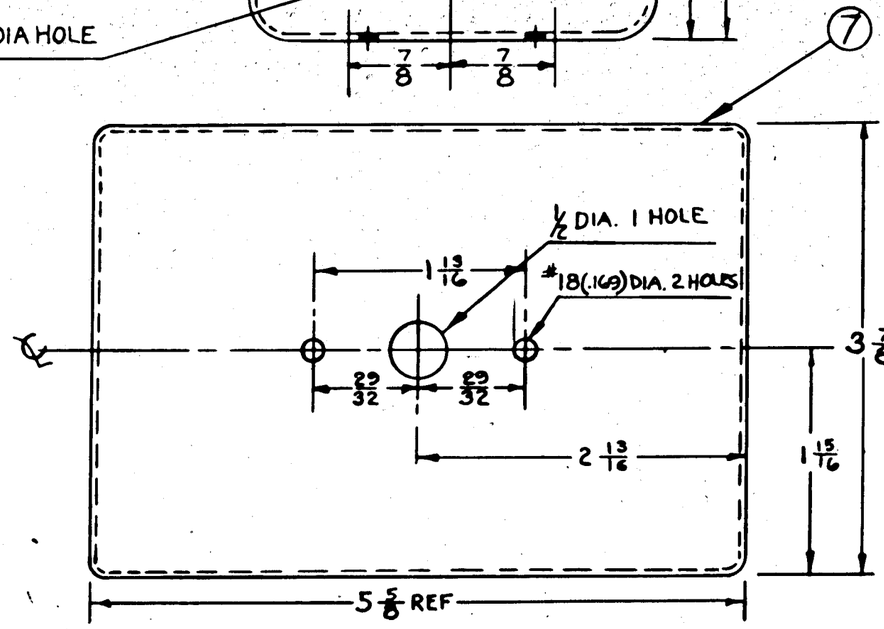

NOTES:

1. BOX & COVER MAY BE PURCHASED FROM EITHER THE POULSEN & NARDON CO. OR THE MONARCH TOOL CO. SPECIFYING P.&N. * 1205-300, 1205-1 WITH TINNERMAN FASTNER * 5928 OR MT-1022-300, CP 1022 WITH TINNERMAN FASTNER * 5928
2. REMOVE FINISH 3/32 RADIALLY AROUND CONDUIT HOLE.

APPROVED FOR TOOLING BY P.B. Humphrey 1-2-43

Con. 91876 CAC * 1263

ASSY. BASH NO.	MODEL	NEXT ASSY.	QTY.
7	PBY-5	28E5385	1
6	PBY-5	28E5385	1

REQUIREMENTS PER AIRPLANE

REPLACES		.63# Calc. Wt.
REPLACED BY		Act. Wt.

Except on Engineering Unless Otherwise Specified ± 1/32 — SCALE 12" = 1'-0"

STAMP PART NUMBER WHERE SHOWN

PART NO.	STOCK	MATERIAL	SPEC.	LH REQ.	RH REQ.	LH REQ.	RH REQ.	LH REQ.	RH REQ.	LH REQ.	RH REQ.	LH REQ.	RH REQ.
PARTS LIST PER ASSY.				-0		-2		-3		-4		-5	
Cover -7 / Box -6	C.A.C. Box 38-300N												

AC		11-13-42							
NAVY	P-INSIDE P-GP-OUTSIDE	E.J. MOORE	KING	"					
HEAT TREAT	FINISH	DRAFT	CHECK	STRUCT	MAT		APPROV		ENG

NAME BOX-ELEC-AZIMUTH CONTROL

OPP. HAND NONE

CONSOLIDATED AIRCRAFT CORP. SAN DIEGO, CALIF.

DWG. SIZE D — 28E5384

R

LET	ALTERATION	DATE	BY

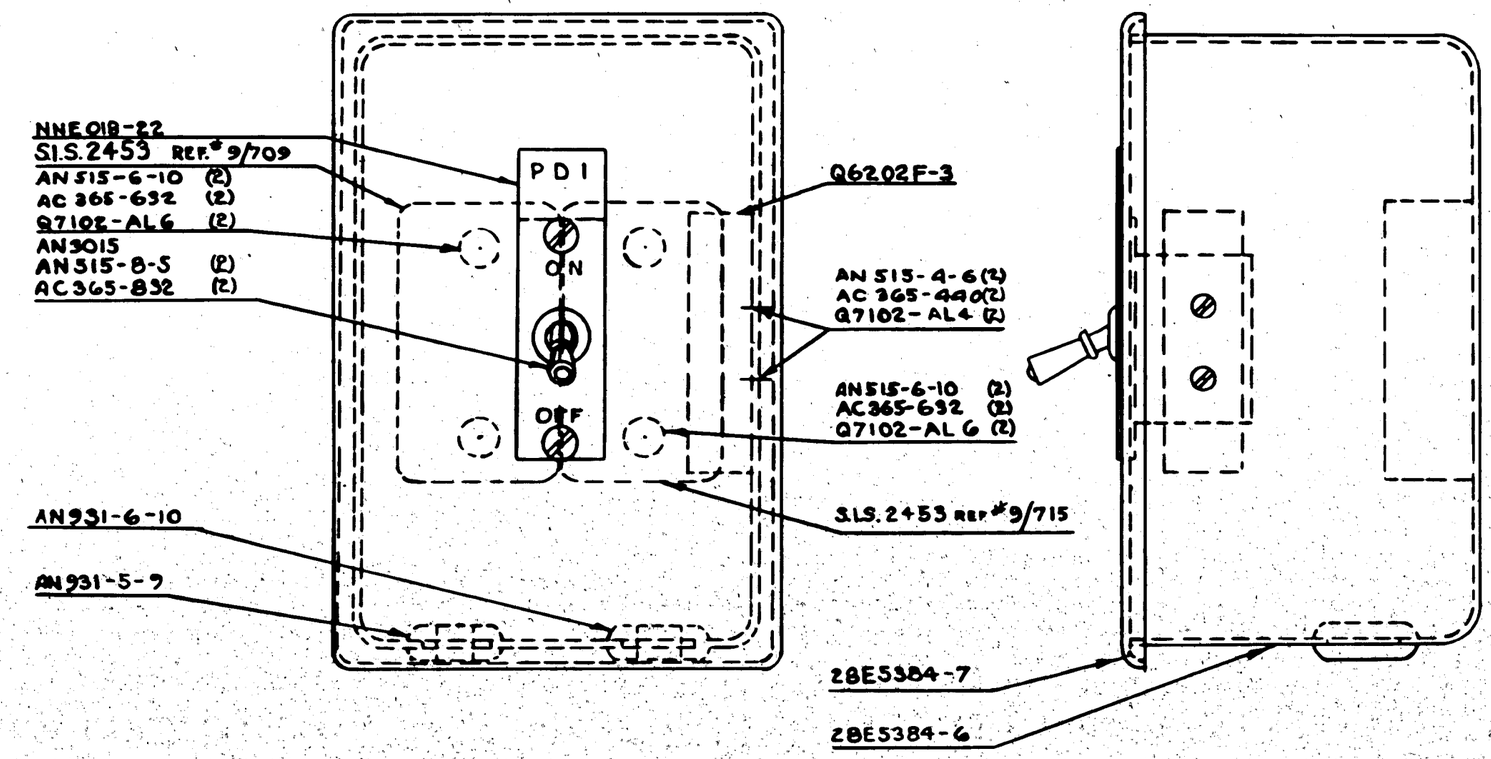

NOTE:
* INDICATES BRITISH FURNISHED EQUIPMENT

Cont. 91876 CAC* 126-3

APPROVED FOR TOOLING BY
R.B. HUMPHREYS 1-2-43

ASSY. DASH NO.	MODEL	NEXT ASSY.	REQ.
0	P6Y-5	28F1113	1

REQUIREMENTS PER AIRPLANE

REPLACES — CALC. WT. .94

REPLACED BY — ASY. WT.

UNLESS OTHERWISE SPECIFIED DIMENSIONS ARE IN INCHES ± 1/32 — SCALE 12"=1'0"

STAMP PART NUMBER WHERE SHOWN

PART No.	STOCK	MATERIAL	SPEC.	LH REQ.	RH REQ.	LH REQ.	RH REQ.	LH REQ.	RH REQ.	LH REQ.	RH REQ.	LH REQ.	RH REQ.
*S.I.S. 2453	REF.* 9/715			1									
*S.I.S. 2453	REF.* 9/709			1									
AC365-832						2							
AC365-632						4							
AC365-440						2							
AN931-5-9				1									
AN931-6-10				1									
AN515-4-6						2							
AN515-8-5						2							
AN515-6-10						4							
AN3015				1									
Q6202F-3				1									
Q7102-AL4						2							
Q7102-AL6						4							
NNE018-22				1									
28E5384-7				1									
28E5384-6				1									

PARTS LIST PER ASSY.

AC		E. MODEL	DRAFT	CHECK	STRUCT	MAT	APPROV	ENG.
NAVY			1106	11				
HEAT TREAT	FINISH							

NAME BOX ASS'Y-ELEC-AZIMUTH CONTROL
CONSOLIDATED AIRCRAFT CORP. SAN DIEGO, CALIF.

OPP. HAND NONE
DWG. D SIZE 28E5385

R

LET	ALTERATION	DATE	BY

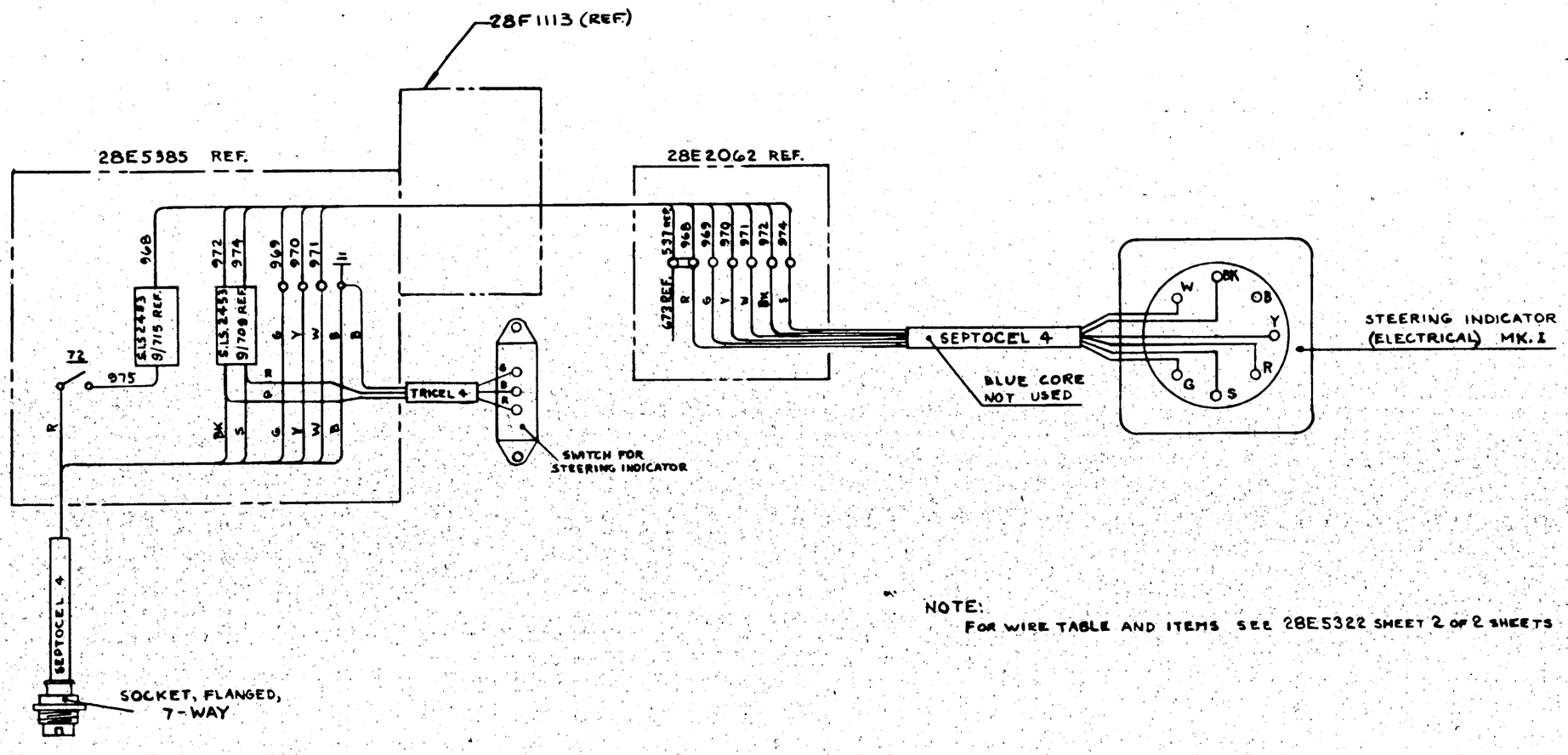

NOTE:
FOR WIRE TABLE AND ITEMS SEE 28E5322 SHEET 2 OF 2 SHEETS

CONT. 91876 CAC #26-3

APPROVED FOR TOOLING BY
R.A. Humphreys 1-2-43

ABBY. DASH NO.	MODEL	NEXT ASSY.	SUB.
	PBY-5	28E5050	1

REQUIREMENTS PER AIRPLANE

REPLACES — CALC. WT.

REPLACED BY — ACT. WT.

SCALE —

STAMP PART NUMBER WHERE SHOWN

PART NO.	STOCK	MATERIAL	SPEC.	LH REQ.	RH REQ.	LH REQ.	RH REQ.	LH REQ.	RH REQ.	LH REQ.	RH REQ.	LH REQ.	RH REQ.
-6													
PARTS LIST PER ASSY.				-0		-2		-3		-4		-5	

AC		11-19-42						
NAVY —	—	E. Moore	8/14 6	1				
HEAT TREAT	FINISH	DRAFT	CHECK	STRUCT	MAT	ASSEM	ENG.	

NAME WIRING DIAGRAM-ELEC-
BRITISH STEERING INDICATOR

OPP. HAND —

CONSOLIDATED AIRCRAFT CORP. SAN DIEGO, CALIF.

DWG. SIZE D — 28E5386

R

LET	ALTERATION	DATE	BY
	E.O. A94050A		
A	REMOVED NAF 1170-(11); AN 515-6-7 (2); AC 366-632(2), ADDED NAF 1077-13(1); AN 515D4-6(3); AN 935-4(3) & AN 340 D4(3), ON FACE 28E5388-8 WAS -8 & 28E5388-9 WAS -9, REVISED P.O./AIRPLANE WT. CHG. NEG.	1-18-43	
	E.O. A96691		
B	AN3015(2) WAS NAF 810894 (1)		
	C.A.C. 83-19 ADDED NAF 1056-17 & NAF 1068-20 WT. & C.G. WAS 1.8	1-18-43	
	E.O. B0279		
C	-6 & 7 ASSYS FOR PBY-5 & PBY-5A WERE -0 ASSYS. WT. CHG. NEG.	2-2-43	
	E.O. # B 2686		
D	AN 3015 (1) WAS AN 3015(2). WT. & C.G. WAS 2.30	2-16-43	
	C.R. 22054		
E	ADDED NOTE " SHELLAC 28E5417-6 ---- COVER WITH SHELLAC" ADDED IN B/M 28E5417-6, 28E5417-7 & 28E5417-8 (EA. REQ). WT. CHG. NEG.	5-1-43	
	C.R. 22125		
F	ON FACE OF DWG. & B/M NAF 213019 (1) & NAF 213028-3 (1) WAS AN 3064-6 (1) AN 3066-4 (1) REQ. WT. CHG. NEG.	5-10-43	
G	TO FACE OF B/M ADDED AN 420-10-12, AN 395-10, AN 335-10 & AC 372-1032 WT. CHG. NEG.	10-23-43	

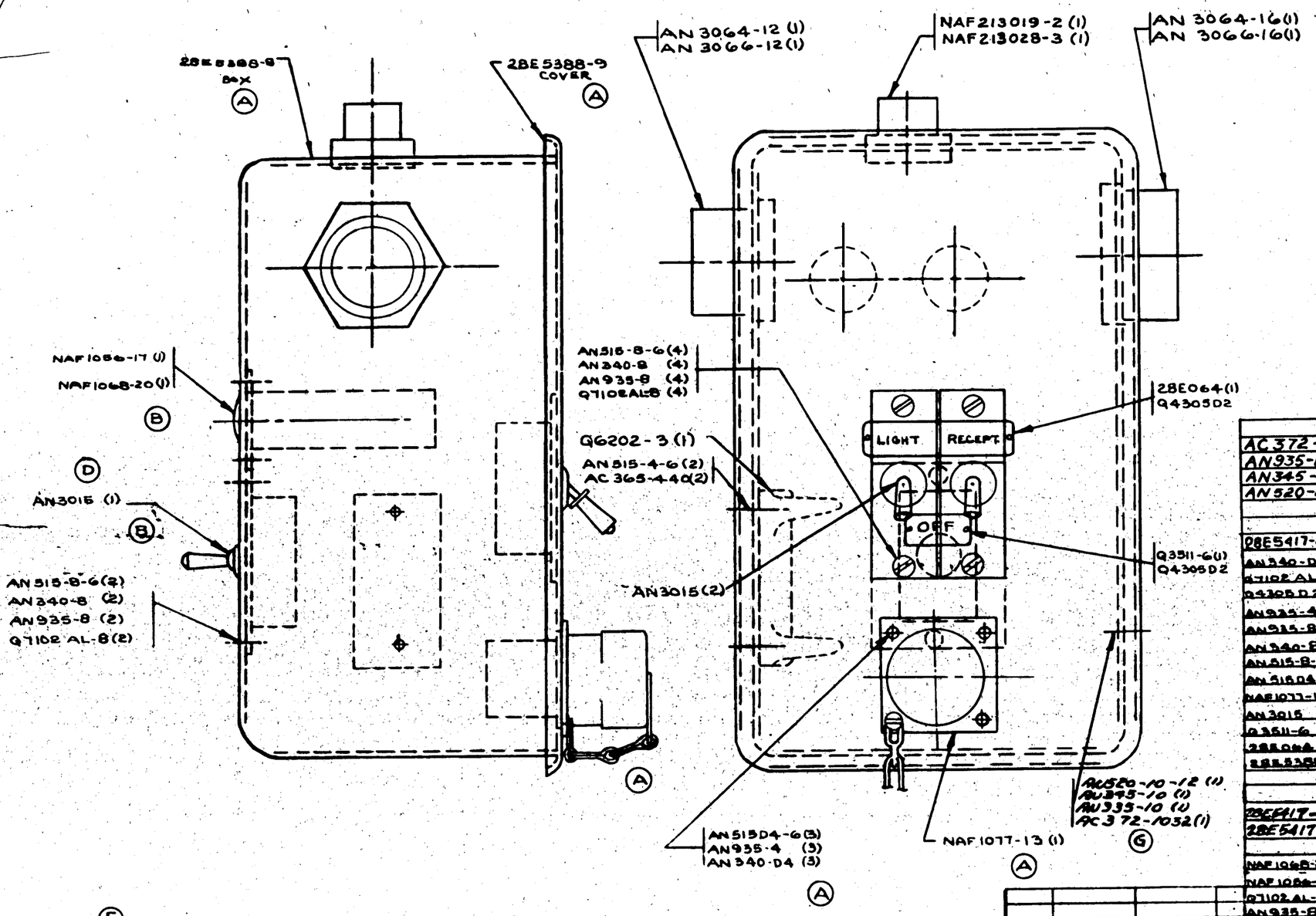

(E) NOTE:

SHELLAC 28E5417-6 TO LEFT SIDE OF BOX & COVER WITH SHELLAC.
SHELLAC 28E5417-7 TO BOTTOM OF BOX & COVER WITH SHELLAC.
SHELLAC 28E5417-8 TO BOX COVER & COVER WITH SHELLAC.

NO2(S) 464

CON. *91876*346-ON

CHG. # 23 (19)

ASS'Y DASH NO.	MODEL	NEXT ASSY.	REQ.
-7	PBY-5A	28E8332	1
-6	PBY-5A	28E5332	1
-7	PBY-5	28E5332	1
-6	PBY-5	28E5332	1

REQUIREMENTS PER AIRPLANE

REPLACES -PASSY.-28E5333 — 2.171 # CALC WT.

REPLACED BY — ACT. WT.

UNLESS OTHERWISE SPECIFIED: +1/32 — SCALE 12"=1'-0"

STAMP PART NUMBER WHERE SHOWN

PART NO.	STOCK	MATERIAL	SPEC.	LH REQ.	RH REQ.	LH REQ.	RH REQ.	LH REQ.	RH REQ.	LH REQ.	RH REQ.
AC 372-1032				1							
AN 935-10				1							
AN 345-10				1							
AN 520-10-12				1							
28E5417-8				1							
AN 340-D4				3							
Q 7102 AL-8				4							
Q 4305 D2				-							
AN 935-4				3							
AN 935-8				4							
AN 340-8				4							
AN 515-8-6				4							
AN 515D4-6				3							
NAF 1077-13				1							
AN 3015				2							
Q 3511-6				1							
28E064A				1							
28E5388-9	COVER			1							
-7	COVER SUB-ASSY										
28E5417-7				1							
28E5417-6				1							
NAF 1068-20				1							
NAF 1056-17				1							
Q 7102 AL-8				2							
AN 935-8				2							
AN 340-8				2							
AN 515-8-6				2							
AC 365-440				2							
AN 515-4-6				2							
AN 3015				1							
Q 6202-3				1							
AN 3066-12				1							
NAF 213019-2				1							
AN 3064-16				1							
AN 3064-12				1							
NAF 213028-3				1							
28E5388-8	BOX			1							
-6	BOX SUB-ASSY										

PARTS LIST PER ASSY.

AC — NAVY — HEAT TREAT — FINISH

P.L. Pilling 12-1-43 — DRAFT — CHECK — STRUCT — APPROV

NAME BOX ASSY.-ELEC.- ANTI-ICER TAIL SWITCH

CONSOLIDATED AIRCRAFT CORP. San Diego, Calif.

OPR. HAND

SIZE D — DWG. 28E5387

R

LET	ALTERATION	DATE	BY
A	#31(120) DIA 4 HOLES & 17/64 DIA HOLE. WAS #28(140) DIA 2 HOLES & 13/64 DIA HOLE REMOVED DIMS. 2 1/32 & 1 3/16. ADDED DIMS. 3/16, 3/32, & 3/32. WT CHG. NEG.	1-19-43	
B	ADDED: VIEW SHOWING ADDITIONAL HOLES IN BOTTOM OF BOX. REMOVED #18(.169)2 HOLES & 1/2 DIA, 1 HOLE WT. CHG. NEG.	1-19-43	
C	#18(.169) 2 HOLES WAS #18(.169) 4 HOLES. 1/2 DIA.(1) HOLE WAS 1/2 DIA. (2) HOLES WT. CHG. NEG.	2-16-43	
D	1 13/32 DIA. WAS 1 25/32 DIA, WT. CHG NEG	2-19-43	MOE
E	ON FACE OF DRWG. 23/32 WAS 21/32 WT. CHG. NEG.	5-10-43	
F	ADDED #10(.193) 1 HOLE. ADDED 1 DIM. WT. CHG. NEG	10-23-43	CRITZ

E.O. #A94687A

E.O. #A97758 CAC. 23-19

E.O #82685

C.R #37890

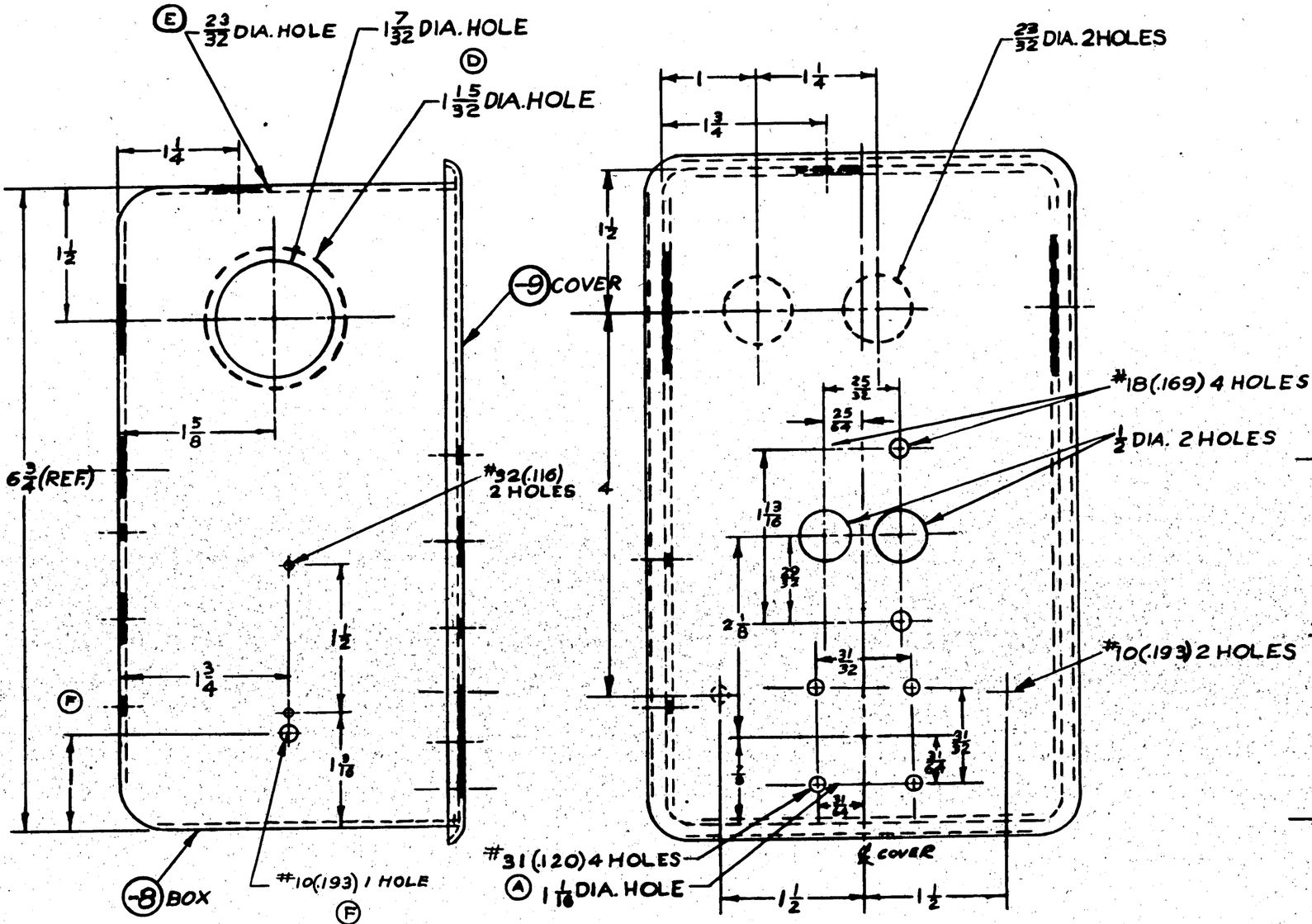

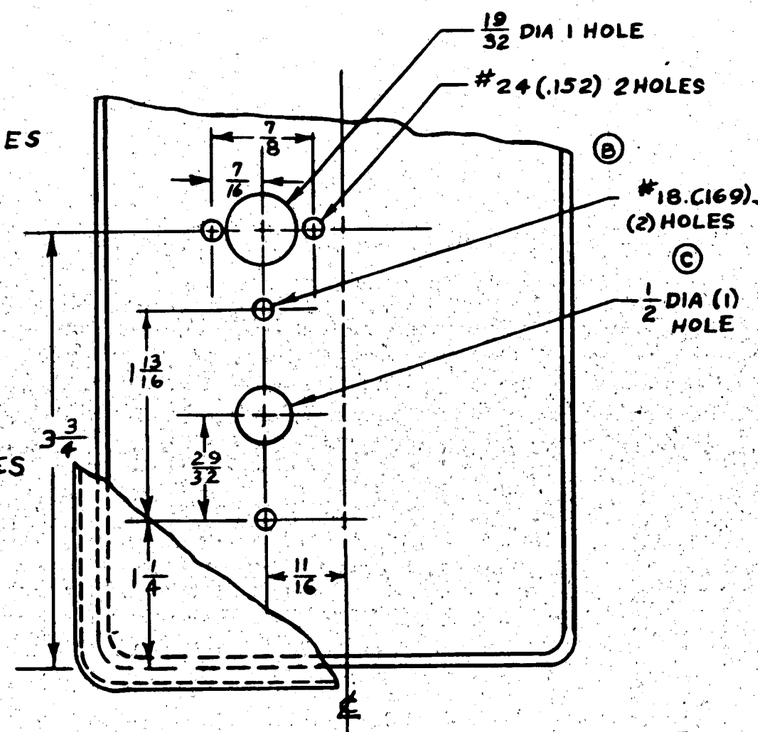

VIEW SHOWING ADDITIONAL HOLES IN BOTTOM OF BOX.

NOTE-

1. BOX & COVER MAY BE PURCHASED FROM MONARCH TOOL & INSTR. CO. BY ORDERING MT1111-316-064-R BOX & 1111CF-SW. COVER OR FROM POULSEN & NARDIN BY ORDERING 1256-316N BOX & 1256-35D COVER.
2. BOX TO BE FURNISHED WITH TIGHT FITTING COVER NON-LOSEABLE SCREWS & DURAL WASHERS.
3. REMOVE FINISH 3/32 RADIALLY AROUND CONDUIT HOLES.
4. FINISH:- P-INSIDE, P-GP-OUTSIDE.

CON. NO3(S)464

CON. #91876 #34 6FON

CHG. #23(19)

ASSY. SHOWN ON	MODEL	NEXT ASSY.	USED
-9	PBY-5A	28E5387	1
-8	PBY-5A	28E5387	1
-9	PBY-5	28E5387	1
-8	PBY-5	28E5387	1

REQUIREMENTS PER AIRPLANE

REPLACES — CALC WT.

REPLACED BY — ACT. WT.

UNLESS OTHERWISE SPECIFIED DIMENSIONS APPLY BEFORE PROTECTIVE TREATMENT — SCALE 12"=1'-0" — ±1/32

STAMP PART NUMBER WHERE SHOWN

-9 COVER } MAKE FROM
-8 BOX } CAL. #BOX46-316N

PART No.	STOCK	MATERIAL	SPEC.	LH REQ. -0	RH REQ. -2	LH REQ. -3	RH REQ. -4	LH REQ. -5	RH REQ.

PARTS LIST PER ASSY.

AC — NAVY — HEAT TREAT — NOTED — FINISH

DRAFT — CHECK — STRUCT — MAT — APPROVED ENG.

NAME BOX-ELEC.- ANTI-ICER TAIL SWITCH

CONSOLIDATED AIRCRAFT CORP. SAN DIEGO, CALIF.

OPP. HAND

SIZE D — DWG. 28E5388

LET	ALTERATION	DATE	BY

WIRE NO.	366	367	960	963	964	965	966	967	968	974	975	977	978	979	980	981
SIZE-A NO.	12	12	20	16	16	16	12	16	12	16	8	20	16	16	16	16
LENGTH FT.	1	1	17	2	16	10	22	10	10	27	3	10	10	8	3	4

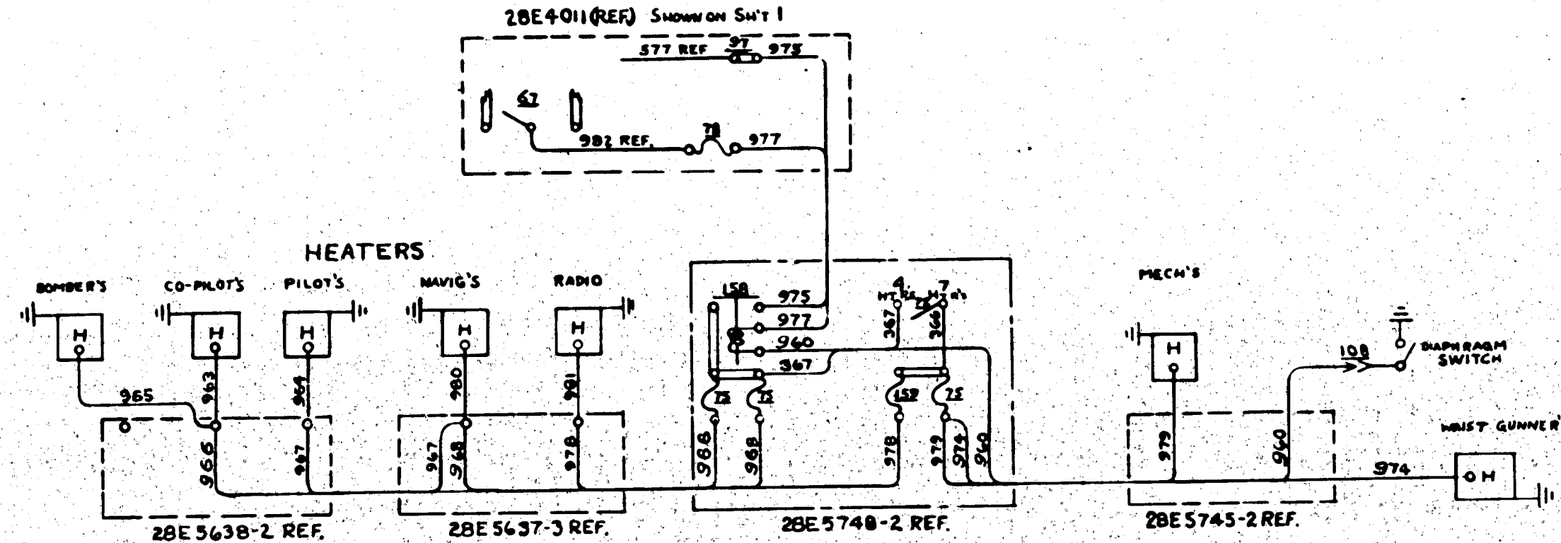

FOR ALL ITEMS SEE 28E5400 SHEET 1

= STEWART-WARNER HEATING SYSTEM =

NOTE:
THIS IS NOT A CONSTRUCTION DRAWING
THIS APPLIES ONLY TO THE STEWART-WARNER
HEATING SYSTEM.

CONT #91876
SHIPS 1 TO 90

ASSY. DASH NO.	MODEL	NEXT ASSY.	DASH NO.
	PBY-5	28E5030	1

REQUIREMENTS PER AIRPLANE

REPLACES — CALC. WT.
REPLACED BY — ACT. WT.
SCALE: NONE
± NONE
STAMP PART NUMBER WHERE SHOWN

PART NO	STOCK	MATERIAL	SPEC.	LH REQ.	RH REQ.	LH REQ.	RH REQ.	LH REQ.	RH REQ.	LH REQ.	RH REQ.	LH REQ.	RH REQ.
-6	WIRE	NOTED	ANJC-48										
				-0		-2		-3		-4		-5	

PARTS LIST PER ASSY.

AC — NAVY NONE — HEAT TREAT
NONE — FINISH
4-1-42 — MOORE — DRAFT
CHECK — STRUCT — MAT — APPROV — ENG

NAME: WIRING DIAGRAM ELECTRICAL SYSTEM
OPP. HAND: NONE
CONSOLIDATED AIRCRAFT CORP. SAN DIEGO, CALIF.
DWG. SIZE: D
28E5400 SHEET 2 OF 2 SHEETS

R 28E5400

LET	ALTERATION	DATE	BY
A	ON FACE OF DWG. 1 IN B/M REPLACED -8 (1) & -7 (1) WITH -8 (2) & -9 (2) RESP.		
	ON FACE OF DWG. 15 1/8 WAS 13 3/4 DIM. WAS 4 1/8; 8 3/4 WAS 7 3/4 & 30° WAS 45°	11-1-43	

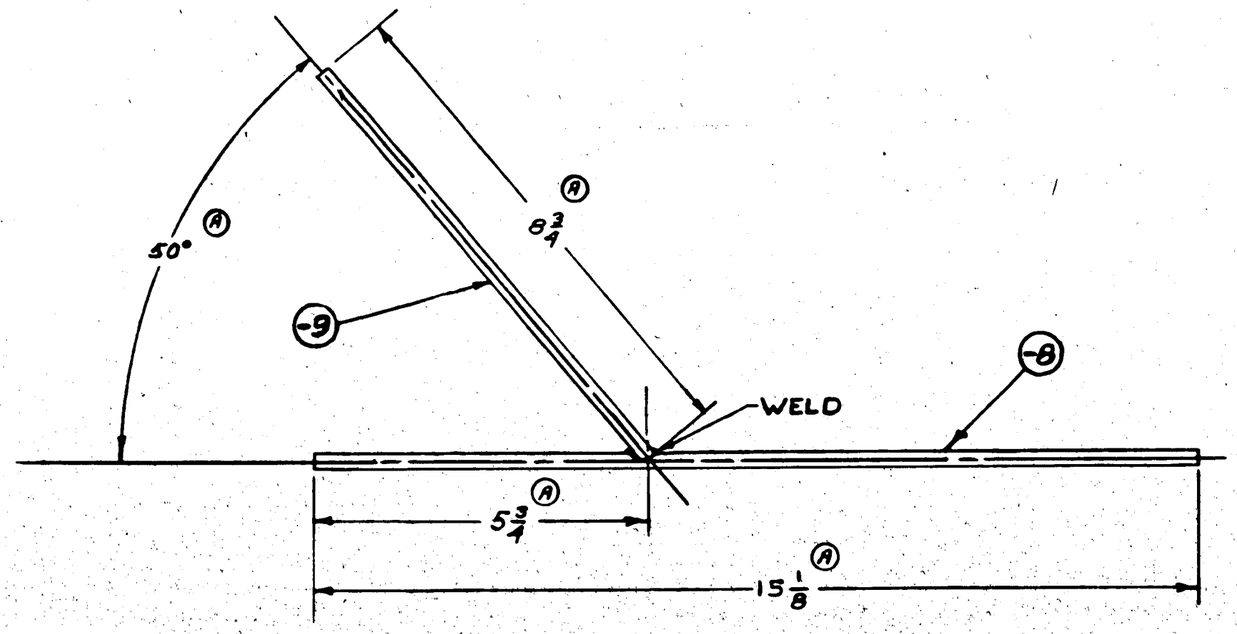

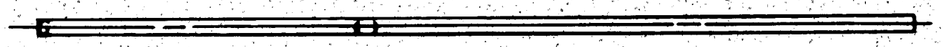

MCR #89-20

V. Brown changed A
APPROVED FOR
TOOLING BY
P.B. Humphreys 1-25-43

ASSY. DASH NO.	MODEL	NEXT ASSY.	REQ.
	PBY-5	28E5397	1

REQUIREMENTS PER AIRPLANE

REPLACED	.047 CALC. WT.
REPLACED BY	ACT. WT.
±1/32 ± 1/2°	SCALE 6"=1'-0

STAMP PART NUMBER WHERE SHOWN

PART No.	STOCK	MATERIAL	SPEC.	LH REQ.	RH REQ.	LH REQ.	RH REQ.	LH REQ.	RH REQ.	LH REQ.	RH REQ.	LH REQ.	RH REQ.
PARTS LIST PER ASSY.				-0		-2		-3		-4		-5	
-9	.035 X 1/4 O.D. X 0	ALUM. AL. TUBE	WW-T-787	1									
-8	.035 X 1/4 O.D. X 15	ALUM. AL. TUBE	WW-T-787	1									

AC								
NAVY	Z-P-GP	1-8-43						
HEAT TREAT	FINISH	DRAFT	CHECK	STRUCT	MAT	APPROV	ENG	

NAME TUBE-ELEC.-OIL DRIP PAN LINE-APU

OPP. HAND

CONSOLIDATED AIRCRAFT CORP. SAN DIEGO, CALIF

DWG. D SIZE 28E5402

R

LET	ALTERATION	DATE	BY
A	CHG'D MCR #89-1-1 SUPT. 7		
	TO MCR #89-2.0 NOW INCH 2-14-43		

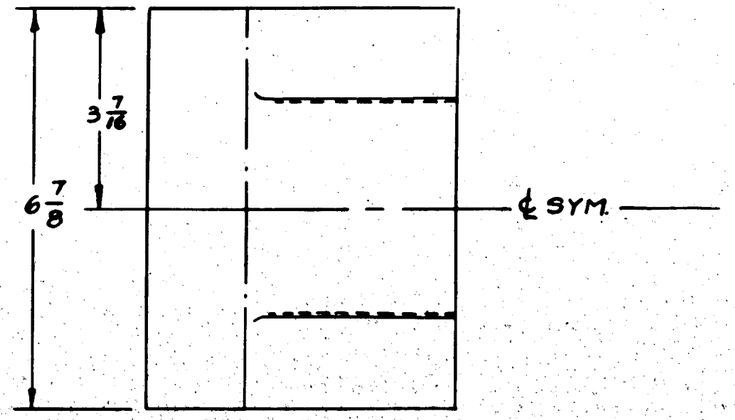

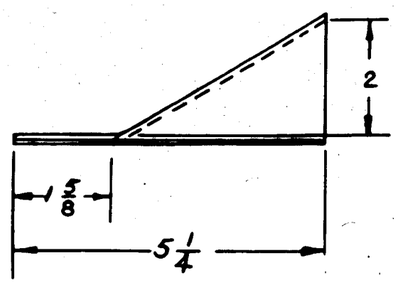

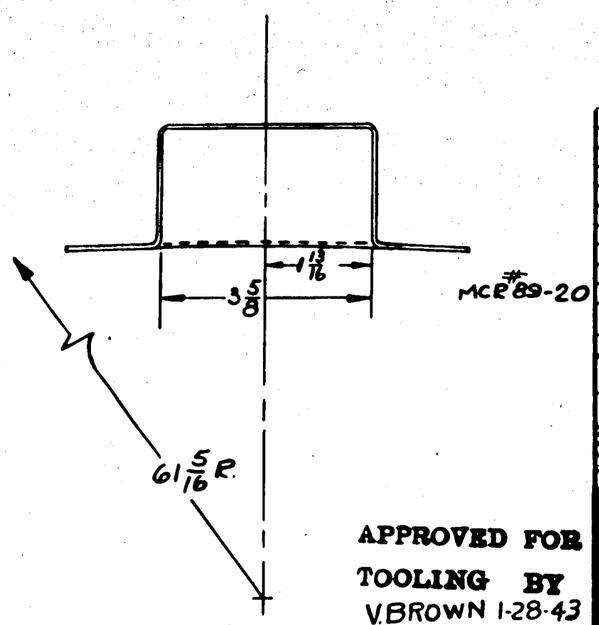

APPROVED FOR TOOLING BY V.BROWN 1-28-43

ASS. DASH NO.	MODEL	NEXT ASSY.	REQ.
	PBY-5	2885081	1

REQUIREMENTS PER AIRPLANE

REPLACES — CALC WT. .20

REPLACED BY — ACT. WT

UNLESS OTHERWISE SPECIFIED DIMENSIONS ARE NOMINAL ± 1/32 — SCALE 6"=1'-0"

STAMP PART NUMBER WHERE SHOWN

PART NO	STOCK	MATERIAL	SPEC
	ø .040 X 5¾ X 9 3/8	ALUM. ALLOY	47A10-T

PARTS LIST PER ASSY.

	LH REQ.	RH REQ.	LH REQ.	RH REQ.	LH REQ.	RH REQ.	LH REQ.	RH REQ.	LH REQ.	RH REQ.
	-0		-2		-3		-4		-5	

A.C.		LINN					
NAVY NONE	Z-P-GP	1-28-43					
HEAT TREAT	FINISH	DRAFT	CHECK	STRUCT	MAT	APPROV	ENG

NAME FAIRING - ELECTRICAL A.P.U. EXHAUST

CONSOLIDATED AIRCRAFT CORP. WF SAN DIEGO, CALIF.

OPP. HAND

DWG. SIZE D — 28E5406

R

LET	ALTERATION	DATE	BY
A	IN BRKTS/AIRPLANE ADDED BRKTS FOR PBY5A C/NOS 461 AND WT. CER.	8-13-43	

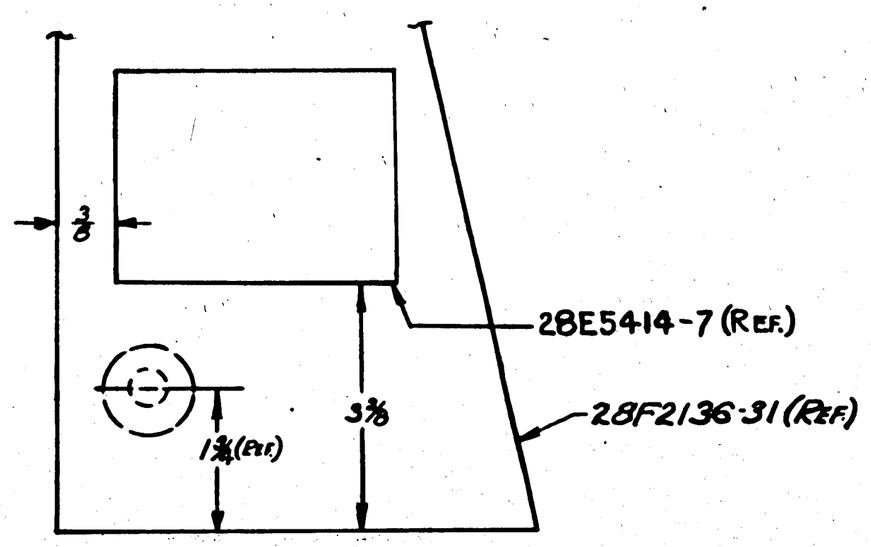

LOCATION OF -7 ON MECH. PANEL

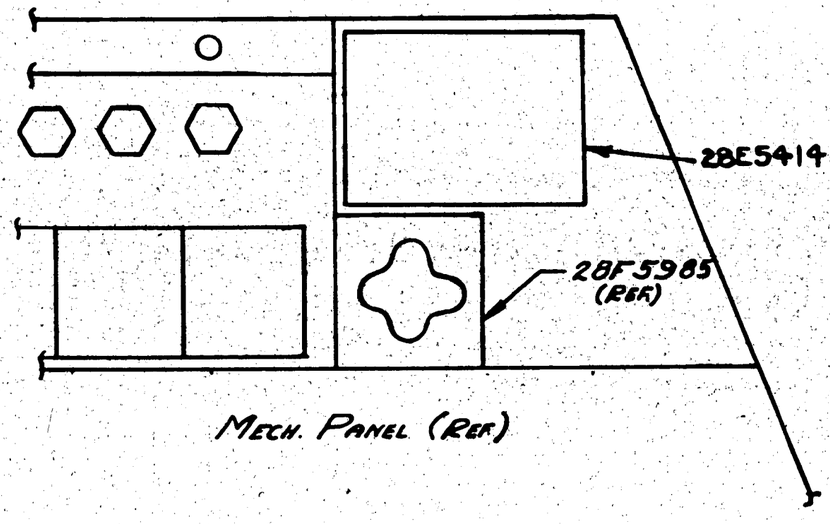

MECH. PANEL (REF)

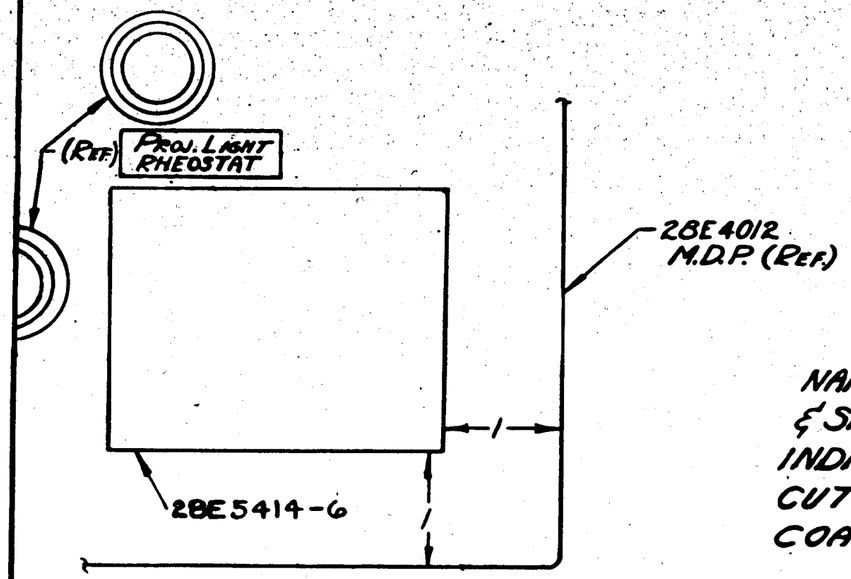

LOCATION OF -6 ON M.D.P.

CUT OUT NAMEPLATE 28E5414-6 & -7 & SHELLAC TO SURFACES INDICATED. COVER CUTOUT WITH ONE COAT OF SHELLAC.

APPROVED FOR TOOLING BY
E. E. Dalton
4-2-43

ASSY. DASH NO.	MODEL	NEXT ASSY.	REQ.
-2	PBY-5A	M.D.P.	1
-0	PBY-5A	MECH. PANEL	1
-2	PBY-5	M.D.P.	1
-0	PBY-5	MECH. PANEL	1

REQUIREMENTS PER AIRPLANE

REPLACES — SHT. WT.

REPLACED BY — ASY. WT.

LIMIT OF DIMENSIONS UNLESS OTHERWISE SPECIFIED — SCALE

STAMP PART NUMBER WHERE SHOWN

28E5414-7
28E5414-6

PART NO.	STOCK	MATERIAL	SPEC.	LH REQ.	RH REQ.	LH REQ.	RH REQ.	LH REQ.	RH REQ.	LH REQ.	RH REQ.	LH REQ.	RH REQ.
PARTS LIST PER ASSY.				-0		-2		-3		-4		-5	

AC		GENERAL				
NAVY		9-25-43				
HEAT TREAT	FINISH	DRAFT	CHECK	STRUCT	MAT	APPROV	ENG.

OPP. HAND

NAME INSTALL NAMEPLATE-ELEC GENERATOR & STARTER-CAUTIONS

CONSOLIDATED AIRCRAFT CORP. SAN DIEGO, CALIF.

SIZE D

28E5413

R

LET	ALTERATION	DATE	BY

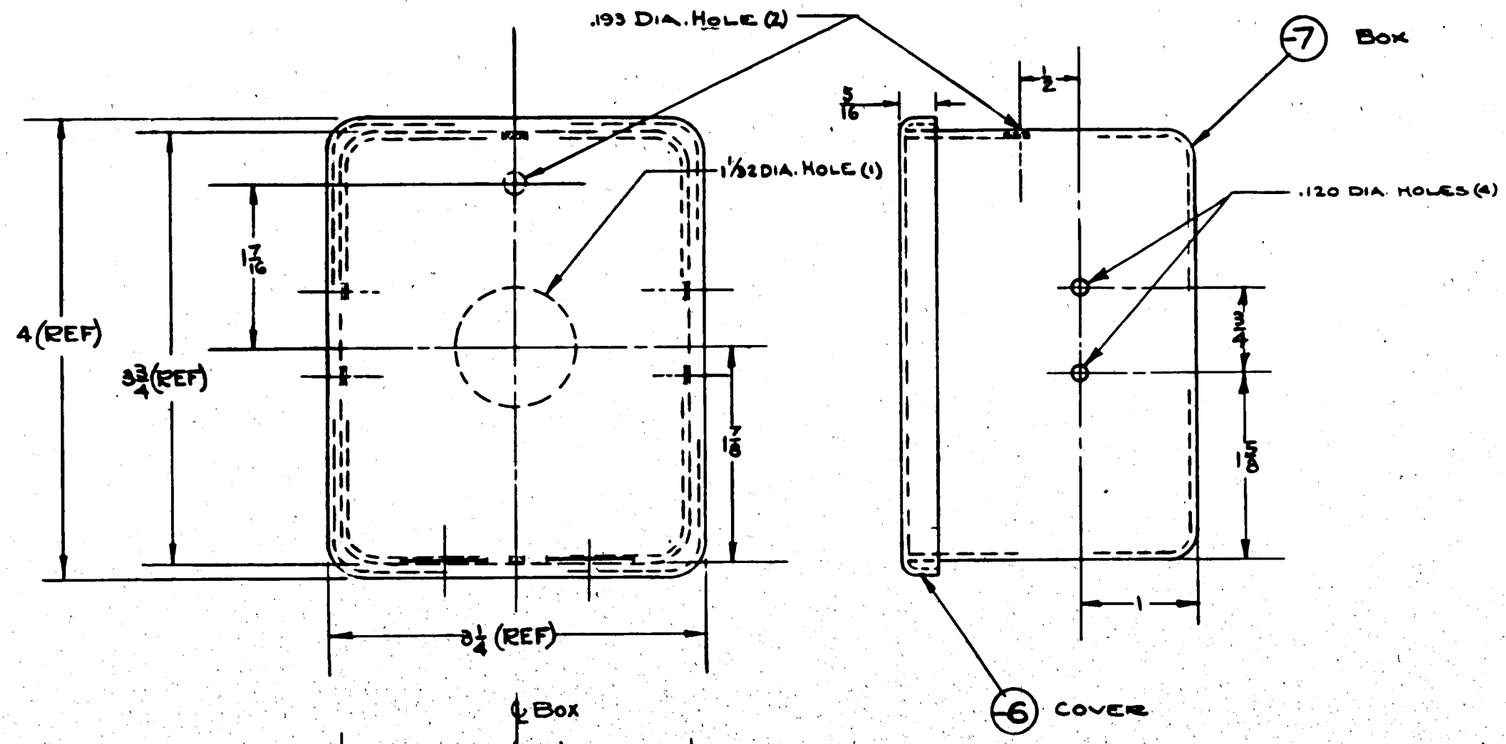

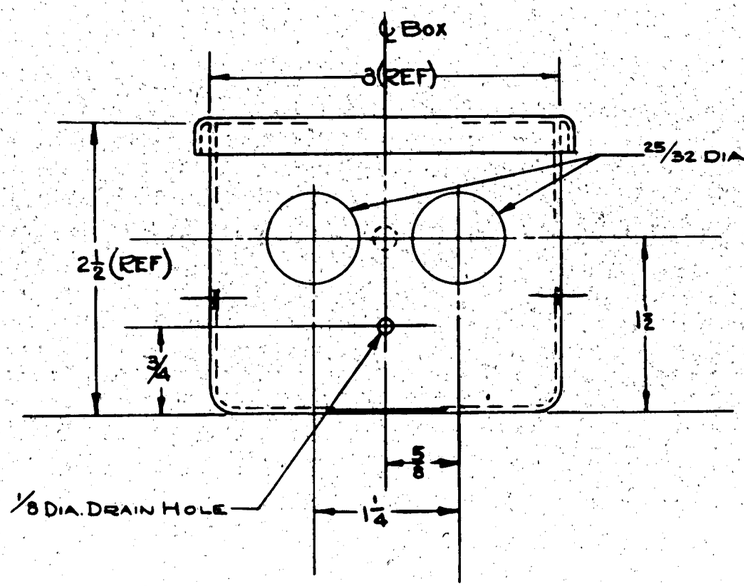

NOTE;-
BOX & COVER MAY BE PURCHASED FROM POULSEN & NARDON CO. LOS ANGELES, CALIF.
BOX # 1095-216N
COVER # 1095-35D OR EQUIV.

APPROVED FOR TOOLING BY
L. E. Dalton
6-23-43

MCR2545

ASSY. DASH NO.	MODEL	NEXT ASSY.	REQ.
	PBY5A	28E5422	1

REQUIREMENTS PER AIRPLANE

REPLACES — CALC. WT. .35

REPLACED BY — ASY. WT.

SCALE 12"=1'-0"

± 1/32

STAMP PART NUMBER WHERE SHOWN

PART No.	STOCK	MATERIAL	SPEC.	LH REQ.	RH REQ.	LH REQ.	RH REQ.	LH REQ.	RH REQ.	LH REQ.	RH REQ.	LH REQ.	RH REQ.
PARTS LIST PER ASSY.													
-7	BOX	CAC. Con #22-216 N.		1									
-6	COVER			1									
				-0		-2		-3		-4		-5	

AC
NAVY NONE
HEAT TREAT

R INSIDE GP OUTSIDE
FINISH

5/15/43 GOOD
DRAFT

CHECK | STRUCT | MAT | APPROV | ENG.

NAME BOX-ELEC.-RADIO ALT. POWER JUNCTION

OPP. HAND —

CONSOLIDATED VULTEE AIRCRAFT CORP. WF SAN DIEGO DIVISION . . . SAN DIEGO, CALIF.

DWG. SIZE D

28E5420

R 0259382

LET	ALTERATION	DATE	
	C&W		
A	ON FACE OF DWG & IN		
	4/M ADDED "AN 935-10(1)".		
	"AN 520-10-16(1)" WAS "AN		
	520-10-16(1)" THE WORD		
	"REF." ADDED TO "AN 365-1032		
	"AN 345-10(1)"; "AN 960 AL 10(1)		
	& "Q 7102 AL 10(1)" W/C CHG. NOS.	7-12-43	HYMAN
73	"ADDED TO B/M ROE 5873 (1) REQ.		
	ON FACE OF DWG. ADDED NOTE #1		
	"SHELLAC ..... WITH SHELLAC		
	W/C CHG. NOS.	10-2-43	HYMAN

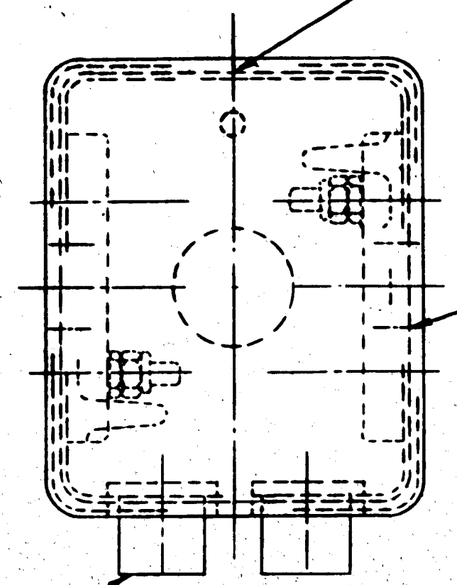

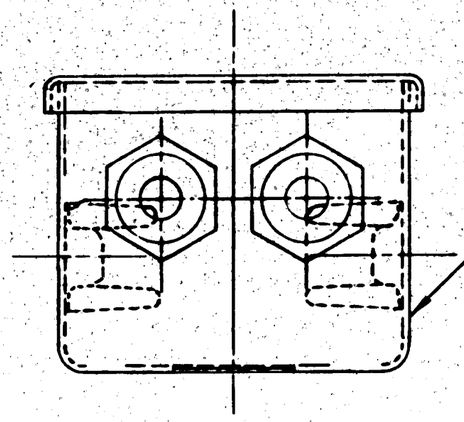

NOTE:-

(73) 1.- SHELLAC 28E5873 TO INSIDE OF COVER 28E5420-6 (REF) MCR2545
& COVER WITH SHELLAC.

APPROVED FOR
TOOLING BY
R E Dalton
6-23-43

PART No.	STOCK	MATERIAL	SPEC.	LH REQ. -0	RH REQ. -0	LH REQ. -2	RH REQ. -2	LH REQ. -3	RH REQ. -3	LH REQ. -4	RH REQ. -4	LH REQ. -5	RH REQ. -5
Q7102AL10				1									
AN960AL10				1									
AN345-10				1									
AC365-1032				1									
AN520-10-10				1									
Q7102AL4						4							
AC365-440						4							
AN515-4-6						4							
Q6202-3						2							
AN3066-6						2							
AN3064-6						2							
NAS21-2-10						4							
AN935-10						1							
28E5873				/									
28E5420-6				1									

PARTS LIST PER ASSY.

ASSY. DASH No.	MODEL	NEXT ASSY.	REQ.
	PBYSA	28E5421	1

REQUIREMENTS PER AIRPLANE

REPLACES — .558 CALC. WT.

REPLACED BY — AGT. WT.

UNLESS OTHERWISE SPECIFIED DIMENSIONS ARE IN INCHES ± 1/32

SCALE 12"=1'-0"

STAMP PART NUMBER WHERE SHOWN

AC

NAVY NONE — NONE

HEAT TREAT — FINISH

DRAFT — CHECK — STRUCT — MAT — APPROV — ENG.

NAME BOX ASSY.-ELEC.-RADIO ALT. POWER JUNCTION

OPP. HAND

CONSOLIDATED VULTEE AIRCRAFT CORP. SAN DIEGO DIVISION . . SAN DIEGO, CALIF.

DWG. SIZE D — 28E5422

28E5422 R

LET	ALTERATION	DATE	BY

28E5428-6 (FOR -0 ASSY. ONLY)
28E5428-7 (FOR -2 ASSY ONLY)

AN320-10-12 (1)
AN345-10 (1)
AN960AL10 (1)
AC365-1032 (1)
Q7102AL10 (1)

28E5425-6 BOX (REF.)

28E5425-7 COVER (REF.)

Q6202F-1 (1)
AN505-4-6 (2)
AC365-440 (2)

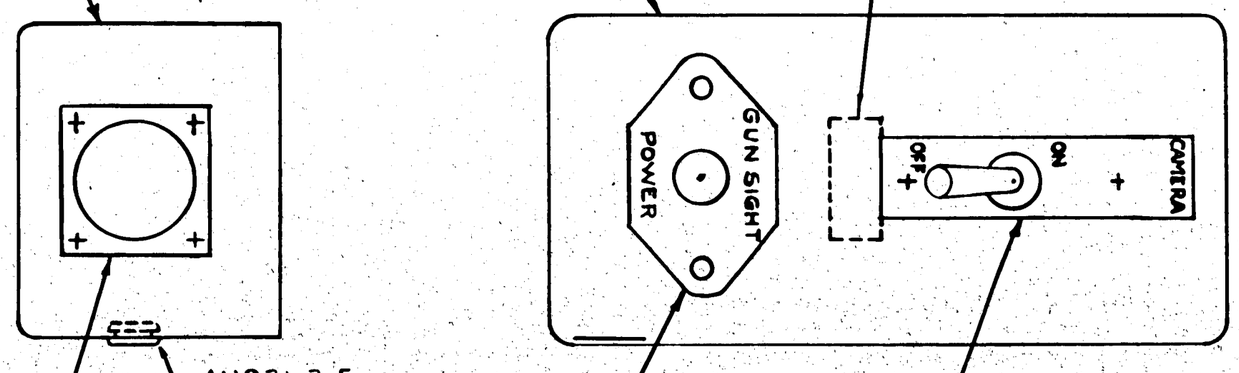

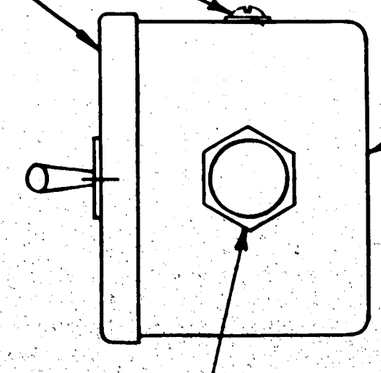

28E5425
BOX & COVER

AN931-3-5

NAF1077-12 (1)
AN515-4-6 (3)
AC365-440 (3)
Q7102-AL4 (3)

NAF1131-5 (1)
29E3205-70 (1)
AN515-6-8 (2)

NNE018-180 (1)
AN3022-2B (1)
AN515-6-8 (2)

AN3064-4 (1)
AN3066-4 (1)

NOTE:
SHELLAC 28E5428-6 & 28E5428-7 TO INSIDE OF RESPECTIVE BOX & COVER OVER WITH SHELLAC

MCR 256-2

ASSY. DASH NO.	MODEL	NEXT ASSY.	REQ.
-2	PBY-5A	28E5427	1
-2	PBY-5	28E5427	1
-0	PBY-5A	28E5427	1
-0	PBY-5	28E5427	1

REQUIREMENTS PER AIRPLANE

REPLACES 28E6351 -72 CALC. WT.

REPLACED BY ACT. WT.

LIMIT OF DIMENSIONS UNLESS OTHERWISE SPECIFIED ± 1/32

SCALE 12" = 1'0"

STAMP PART NUMBER WHERE SHOWN

PART NO.	STOCK	MATERIAL	SPEC.	LH REQ. -0	RH REQ. -0	LH REQ. -2	RH REQ. -2	LH REQ. -3	RH REQ. -3	LH REQ. -4	RH REQ. -4	LH REQ. -5	RH REQ. -5
28E5428-7					1		1						
28E5428-6				1		1							
NNE018-180				1		1							
Q7102-AL4				3		3							
Q7102-AL10				1		1							
Q6202F-1				1		1							
AC365-1032				1		1							
AC365-440				5		5							
AN505-4-6				2		2							
AN3022-2B				1		1							
AN931-3-5				1		1							
AN515-4-6				3		3							
AN515-6-8				4		4							
AN960AL10				1		1							
AN345-10				1		1							
AN520-10-12				1		1							
AN3066-4				1		1							
AN3064-4				1		1							
NAF1131-5				1		1							
NAF1077-12				1		1							
29E3205-70				1		1							
28E5425				1		1							

PARTS LIST PER ASSY.

APPROVED FOR TOOLING BY FRUE 7/21-43

A C		Moore	HLAVIN		
NAVY NONE	NONE		7-17-43		
HEAT TREAT	FINISH		DRAFT	CHECK	STRUCT. MAT	APPROV	ENG.

NAME BOX ASSY. - ELEC. CAMERA SWITCH

OPP. HAND

DWG. SIZE D

28E5426

R

CONSOLIDATED VULTEE AIRCRAFT CORP. WF SAN DIEGO DIVISION . . SAN DIEGO, CALIF.

28E5426

LET	ALTERATION	DATE	BY

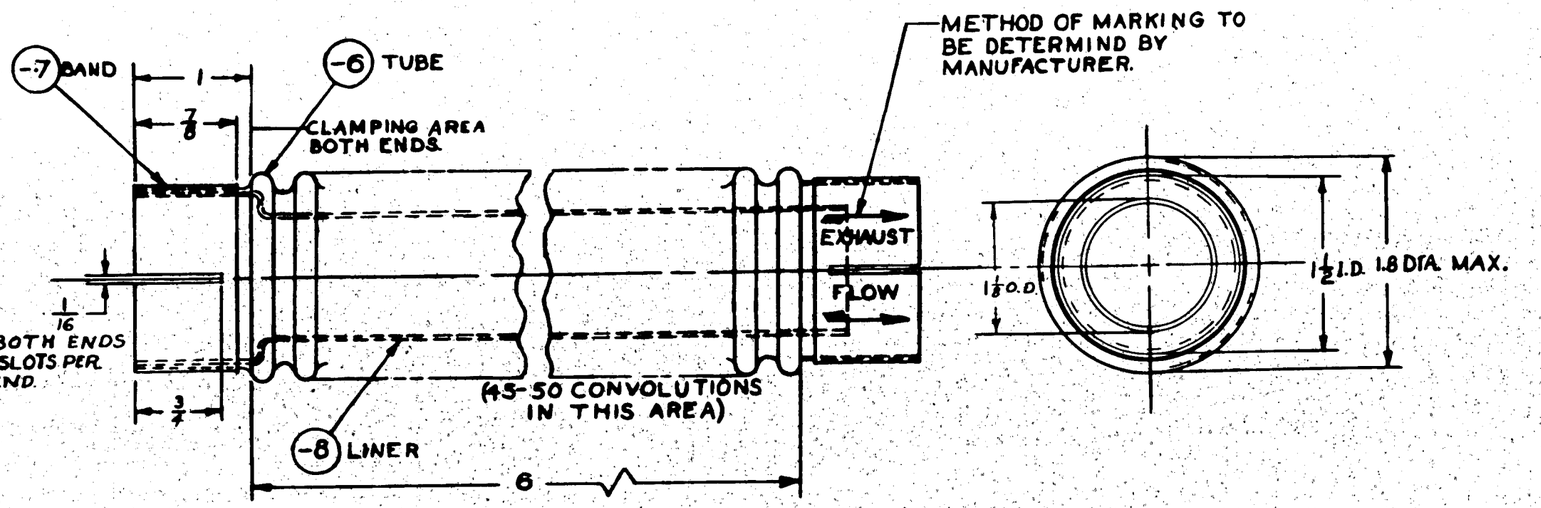

NOTES:

(1) ALL DIMS. NOT SHOWN ON DWG. TO BE DETERMINED BY MANUFACTURER.

(2) SPOTWELD -8, -7 & -6 TOGETHER.

(3) PART 28E5437 TO BE FURN'D AS SPARES IN PLACE OF 28E5250 ON C.81876 & 91 ON.

M.C.R. 898 & ON

MAY BE PURCHASED FROM CHICAGO METAL HOSE CORP., MAYWOOD, ILLINOIS.

APPROVED FOR TOOLING BY Hosline 8-31-43

PURCHASE TO DWG.

ASSY. DASH NO.	MODEL	NEXT ASSY.	SHO.
	PBY-5	28E5268	

REQUIREMENTS PER AIRPLANE

REPLACES — .421 Calc. Wt.

REPLACED BY — Act. Wt.

SCALE 12" = 1'-0"

STAMP PART NUMBER WHERE SHOWN

PART NO.	STOCK	MATERIAL	SPEC.	LH REQ.	RH REQ.	LH REQ.	RH REQ.	LH SPR REQ.	LH REQ.	RH REQ.	LH SPR REQ.
-8	1¼ O.D.	ST. STL. TUBE	AN-WW-T-858								
-7	1.025" x 1" x 43"	ST. STL. SHT.	AN-QQ-S-757	2							
-6	.9055" x 1¼" x 8"	ST. STL. TUBE	REX-FLEX								
PARTS LIST PER ASSY.				-0	-2	-3	-4	-5			

AC		STEWART						
NAVY NONE	NONE	9-23-43	8-28-43					
HEAT TREAT	FINISH	DRAFT	CHECK	STRUCT	ELEC	APPD	ENG.	

NAME TUBE-A.P.U. EXHAUST LINE FLEXIBLE

OPP. HAND

CONSOLIDATED VULTEE AIRCRAFT CORP. SAN DIEGO DIVISION . . . SAN DIEGO, CALIF.

DWG. D 28E5437

28E5437 R

LET	MODIFICATION	DATE	BY
A	ADDED AN526-1032-10(2)		
	NAF 213028-3 (1) & AN960-4 (2)	2-20-52	Chas
B	CHANGED PARTS TO NAF213019-3 (1) WAS (1). NAF213028-3 (2) WAS (2)	2-26-52	Chas
C	ON FACE 6 DWG CHG. AMF R13478-8 (2 REQ) TO (1 REQ) REMOVED AC365-832 (2 REQ). CHG. AN526-D1032-9 (2 REQ) TO AN526-D1032-10(2 REQ) ADDED TO FACE 3 ✱ DIMENSION ADDED 28-SAMK REQUIREMENTS.		
D	E.O. 7-11-8949 28E5621-6 WAS AN526-1032-12 - MFG. NOT CHG.	4-3-52	Chas

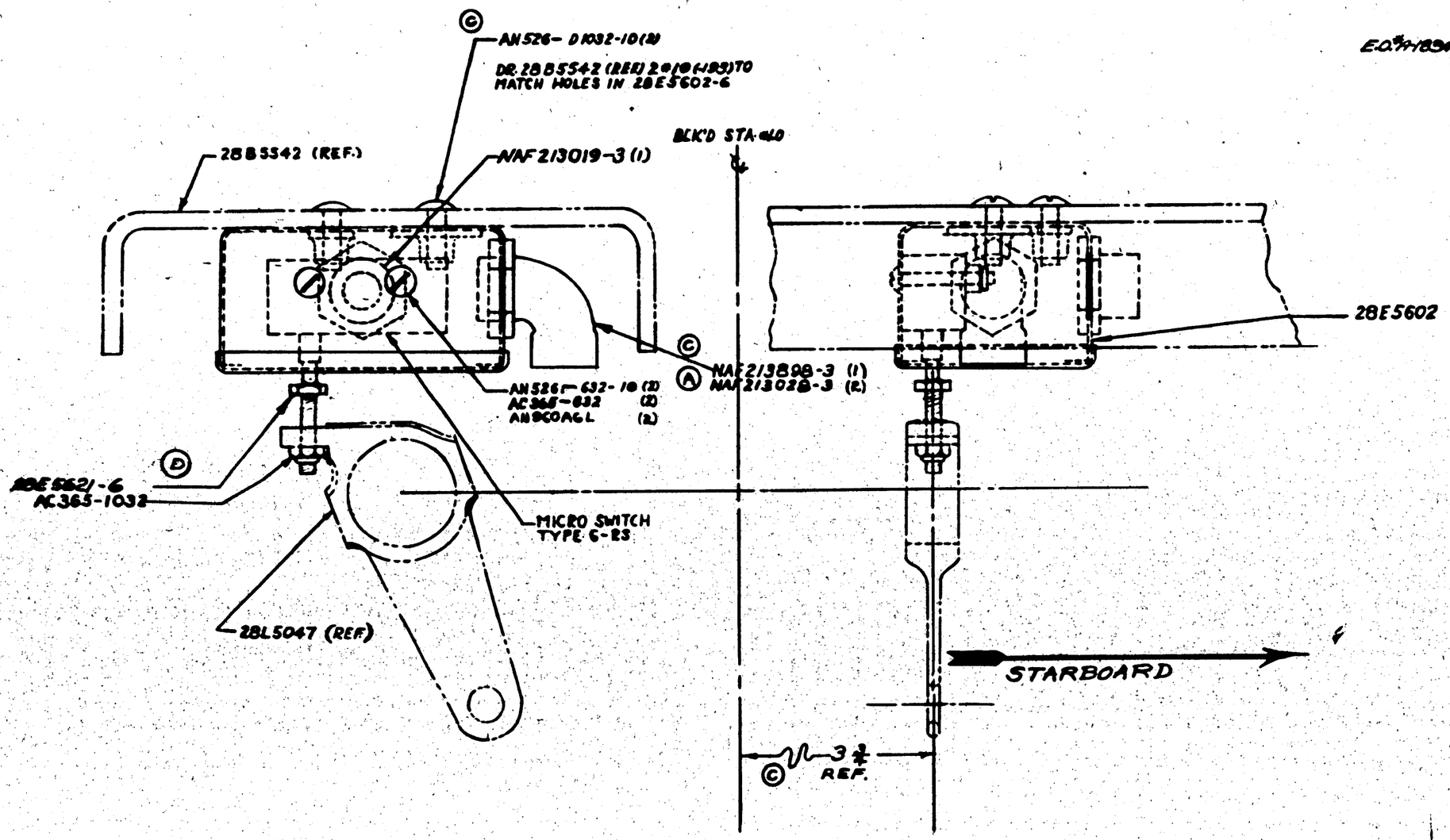

NOTE:-
LOCATE 28E5602 BOX & MICRO SWITCH ASS'Y ON 28B5542 (REF.) SO THAT AN526-1032-12 ON 28L5047 (REF.) ACTUATES SW. WHEN LATCH IS CLOSED.

OVERTRAVEL TO BE NOT MORE THAN 1/32.

ASSY. DASH No.	MODEL	NEXT ASSY	QTY.
-0	28-5AMH	28E1011	1
-0	28-5AMC	28E1011	1
-0	PBY-5A	28E1011	1

REQUIREMENTS PER AIRPLANE

REPLACES .19 CALC. WT.

REPLACED BY ACT. WT.

SCALE 12" = 1'-0"

STAMP PART NUMBER WHERE SHOWN

PART No.	STOCK	MATERIAL	SPEC.	-0	-2	-3	-4	-5
				1	1	1	1	1
				2	2	2	2	2
				1	1	1	1	1
				2	2	2	2	2
				2	2	2	2	2
				1	1	1	1	1
	MICROSWITCH		TYPE 6-B3	1	1	1	1	1
	MICROSWITCH	CORP.	FREEPORT, ILLINOIS					
				1	1	1	1	1

PARTS LIST PER ASSY.

A.C.
NAVY NONE
HEAT TREAT
NOTED ON DETAILS
FINISH

	DRAFT	CHECK	STRUCT.	DAT	APPROV.	ENGR.
	1-6-52					

NAME ASS'Y & INST'L - ELEC. - LATCH SW. NOSE WHEEL

CONSOLIDATED AIRCRAFT CORP. SAN DIEGO, CALIF.

OPP. HAND NONE

SIZE D

28E5603

LET	ALTERATION	DATE	BY

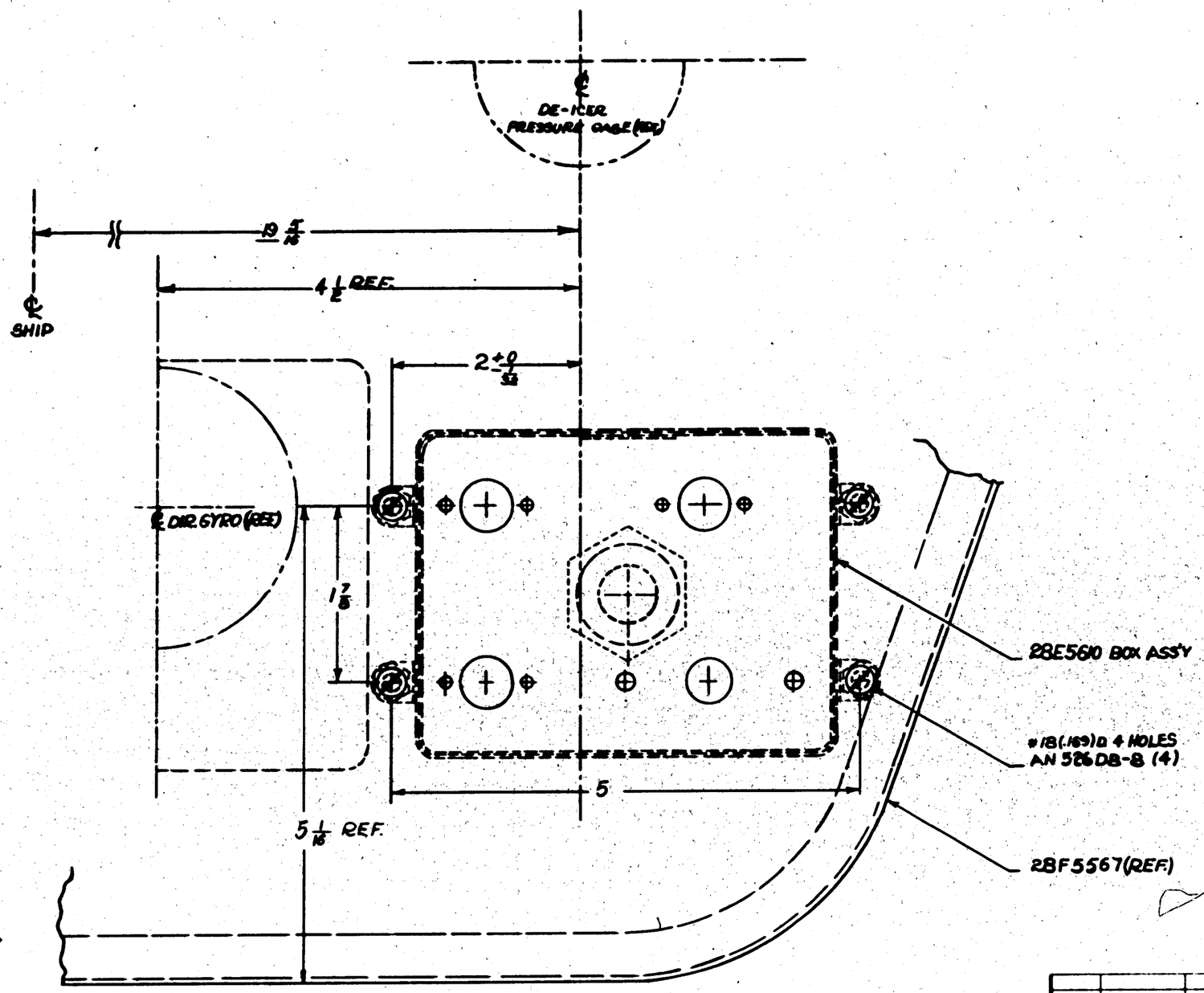

ASSY. DASH NO.	MODEL	NEXT ASSY	REQ'D
-0	28-5AMC	28E1011	1
-0	PBY-5A	28E1011	1

REQUIREMENTS PER AIRPLANE

REPLACES — CALC WT. .14

REPLACED BY — ACT WT.

SCALE 12"=1'-0"

± 1/32

STAMP PART NUMBER WHERE SHOWN

PART No.	STOCK	MATERIAL	SPEC.	LH REQ.	RH REQ.	LH REQ.	RH REQ.	LH REQ.	RH REQ.	LH REQ.	RH REQ.	LH REQ.	RH REQ.
AN526D8-8				4									
28E5610	BOX ASSY			1									
PARTS LIST PER ASSY.				-0		-2		-3		-4		-5	

A C		May			NOMAN			
NAVY NONE	NOTED ON DETAILS	10-28-40	11-2-40		KERR		2-24-41	
HEAT TREAT	FINISH	DRAFT	CHECK	STRUCT	MAT	APPROV	ENG	

NAME INSTAL.-BOX ASSY-ELEC.-L.G. INDICATING LIGHTS-PILOTS PN'L

OPR. HAND NONE

CONSOLIDATED AIRCRAFT CORP. San Diego, Calif.

SIZE D

28E5609

E.O. NO.	LET	ALTERATION	DATE	BY
41698	A	RELOCATED 1 3/32 DIA HOLE B, NAF 213019-5, NAF 213028-5, 1 1/16		
		DIM. ADDED LOCATING DIM.		—
		ALSO 3/8 R. CUTOUT. NO WT. CHG.	7-7-42	

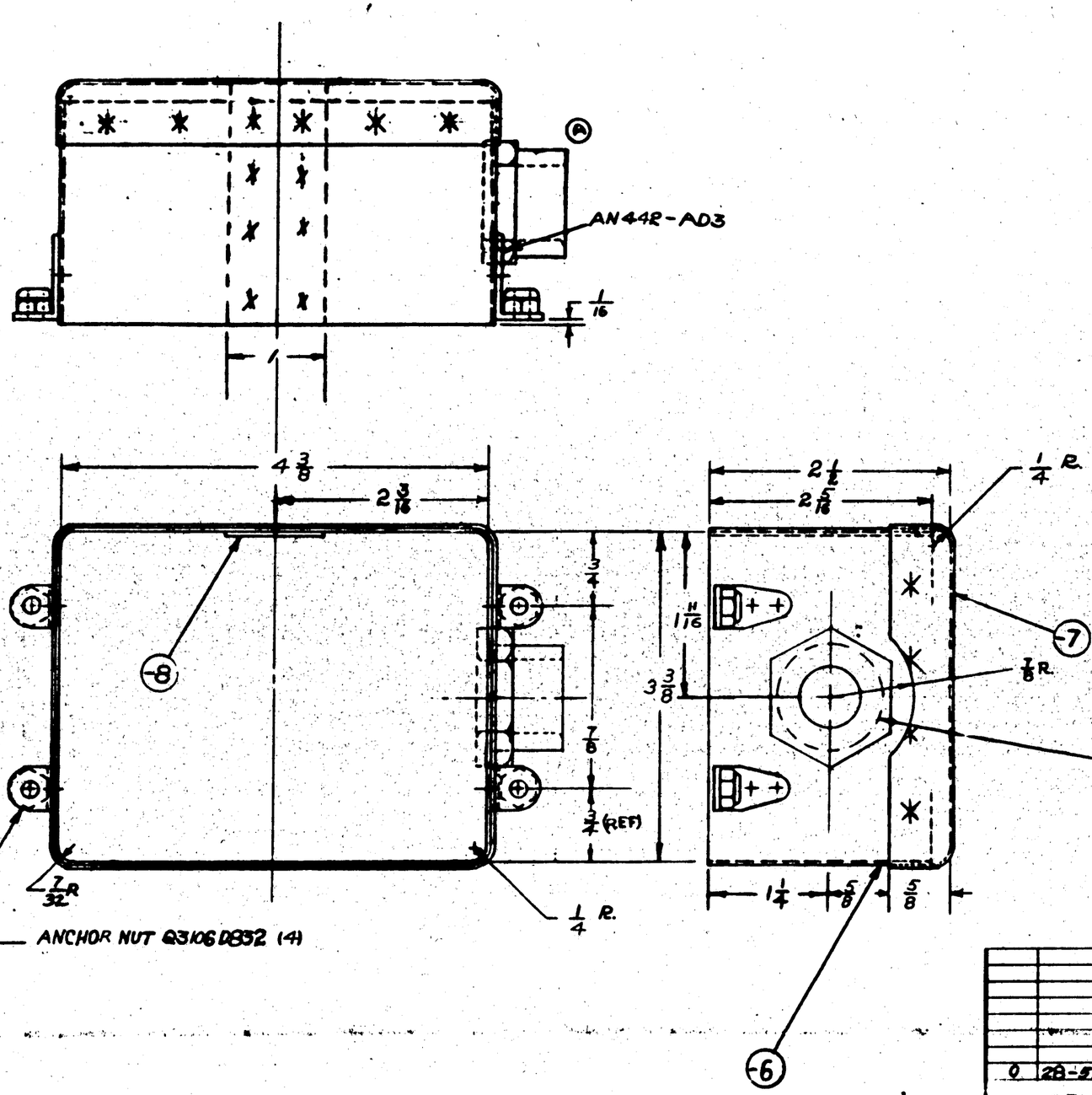

NOTE:-
FINISH - P INSIDE-P-AP OUTSIDE
APPLY FINISH BEFORE ATTACHING ANCHOR NUTS
REMOVE FINISH 3/32 RADIALLY
AROUND 1 3/32 DIA HOLE.

FINISH CODE	
Z	ANODIC TREATMENT
P	P-27 PRIMER
AP	ALUMINIZED PRIMER
C	CADMIUM PLATE

PART NO.	STOCK	MATERIAL	SPEC.	LH REQ.	RH REQ.	LH REQ.	RH REQ.	LH REQ.	RH REQ.	LH REQ.	RH REQ.	LH REQ.	RH REQ.
Q3106D832				4									
NAF213028-5				1									
NAF213019-5					1								
AN442-AD3													
-8	.032 x 1 1/8 x 2 1/2	AIC	17AB-T	1									
-7	.032 x 8 1/2 x 9 1/2	AIC	17AB-A			1							
-6	.032 x 2 1/2 x 7 1/8	AIC	17AB-T				1						
PARTS LIST PER ASSY.				-0		-2		-3		-4		-5	

Q3106D832 (4)
NAF213028-5 (1)
NAF213019-5 (1)
0 28-5AMC 28E5609 1
AB DA — 28Y-5A — 28E5609 1 — MODEL — NEXT ASSY — REQ
REQUIREMENTS PER AIRPLANE
REPLACES — CALC WT. .14
REPLACED BY — ACT. WT.
SCALE 12" = 1'-0"
STAMP PART NUMBER WHERE SHOWN

✳ SPOTWELDING SYMBOL
THIS SYMBOL INDICATES SPOTWELDING RIVETS ARE NOT INDICATED ON THIS DRAWING BY SYMBOLS.

A.C.		May	BOONE		MCCAR
NAVY NONE	NOTED	10-28-40	11-19-40	MAW	
HEAT TREAT	C.A.C. SP. 38-007 FINISH	DRAFT	CHECK	STRUCT.	MAT'L. APPROV. ENG.

NAME BOX ASSY - ELEC - L.G. INDICATING LIGHTS
OPP. HAND NONE
CONSOLIDATED AIRCRAFT CORP. SAN DIEGO, CALIF.
DWG. SIZE D — 28E 5610

LET	ALTERATION	DATE	BY
C	REDRAWN. NO WT. CHG.	3-29-43	
D	CREATED -9 COVER. FOR PBY-5A C.88476 #55 & ON		
	NO WT. CHG.	3-29-43	

E.O.A40861A

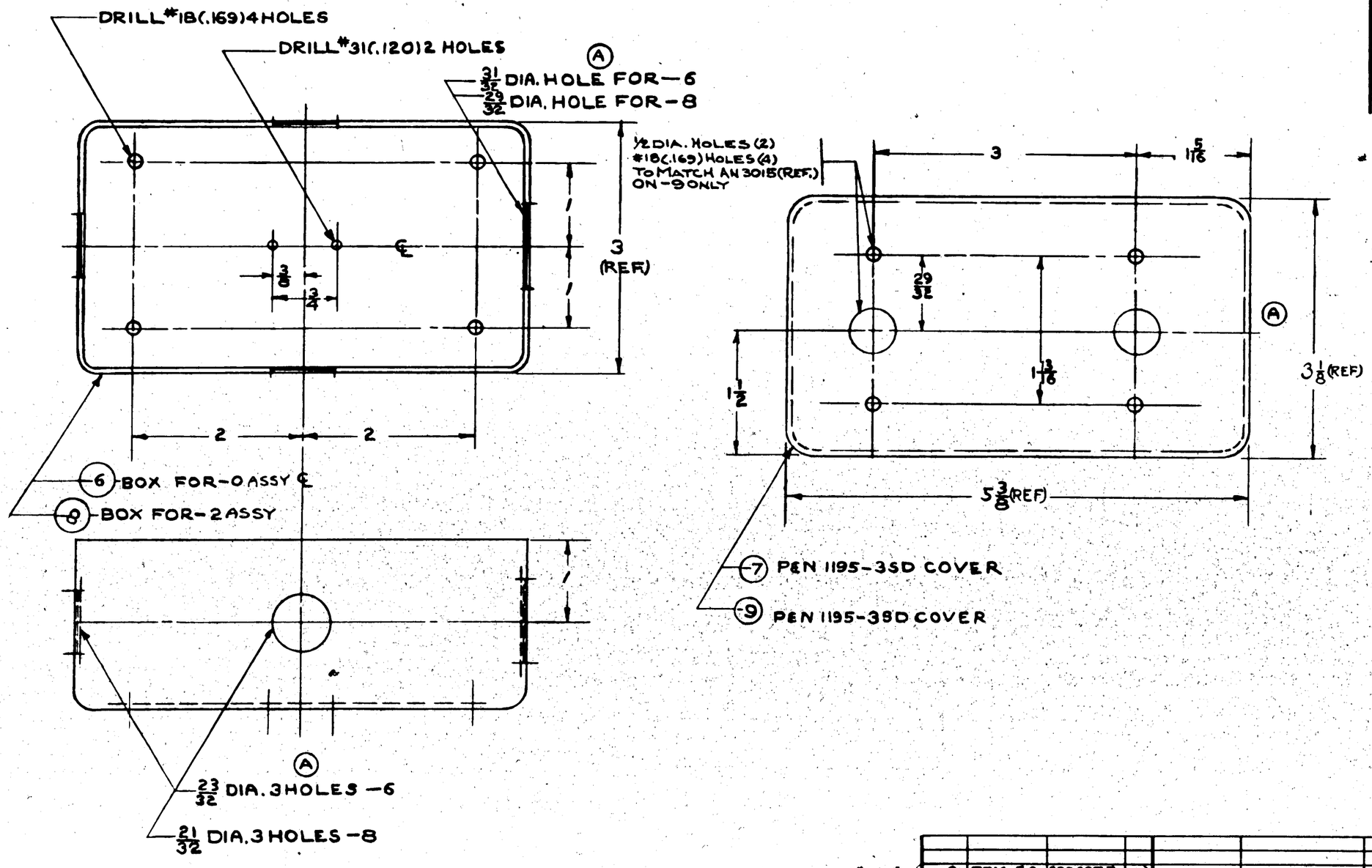

NOTES:
1. POULSEN & NARDON BOX 1195-200N TO BE SUPPLIED WITH TIGHT FITTING COVER & NON-LOSABLE SCREWS.
2. FINISH INSIDE "P"
   FINISH OUTSIDE "P-G-P"
   REMOVE FINISH 3/32 RADIALLY AROUND HOLES.

C.88476 #53 TO #146
C.91876 #1 TO #90
C.70496, 77713, 88476

#6 & ON

APPROVED FOR TOOLING BY

E. E. Dalton
5-5-43
Change A B & C

ASSY. DASH NO.	MODEL	NEXT ASSY.	REQ.
-9	PBY-5A	28E6275	1
-8	PBY-5A	28E6275	1
-2	PBY-5	28E5638	1
-0	PBY-5A	28E5638	1
-0	28-5MC	28E5638-4	1
-0	28-5MC	28E5638-4	1
-0	28-5MA	28E5638-6	1
-0	28-5MB	28E5638-6	1

REQUIREMENTS PER AIRPLANE

REPLACES 28E5634 # 2-28-44 CALC. WT.
REPLACED BY AGT. WT.
LIMIT ON DIMENSIONS UNLESS OTHERWISE SPECIFIED ± 1/32
SCALE 12" = 1' 0"
STAMP PART NUMBER WHERE SHOWN

PART No.	STOCK	MATERIAL	SPEC.	LH REQ. -0	RH REQ. -2	LH REQ. -3	RH REQ. -4	LH REQ. -5	RH REQ.
-9	P&N 1195-3SD								
-8	P&N 1195-200N				1				
-7	P&N 1195-3SD			1					
-6	P&N 1195-200N			1					

PARTS LIST PER ASSY.

AC		KERN-BERGER					
NAVY NONE	NOTED	3-29-43					
HEAT TREAT	FINISH	DRAFT	CHECK	STRUCT	MAT	APPROV	ENG.

NAME BOX—ELEC.
CO-PILOT'S HEATER JUNCTION
CONSOLIDATED AIRCRAFT CORP. SAN DIEGO, CALIF.

OPP. HAND
DWG. SIZE D
28E5634

R

28E5634

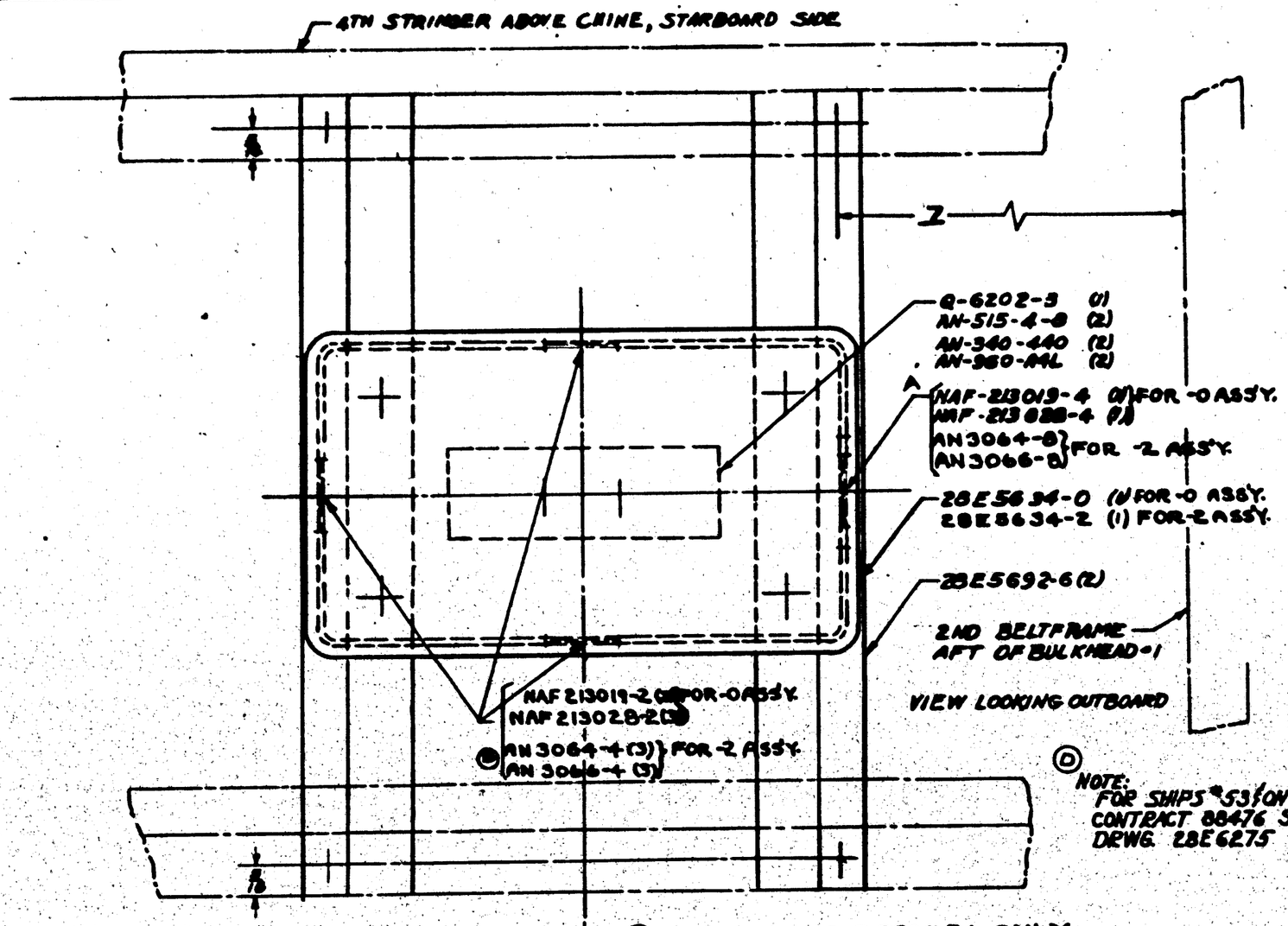

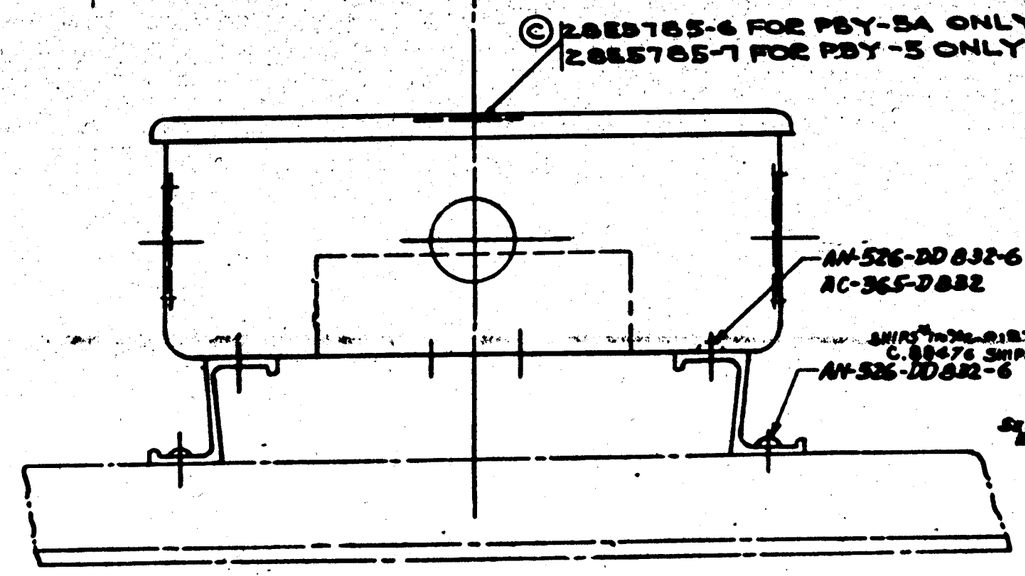

NOTE:
THIS DWG. PERTAINS TO 28-SME #6 SHIP & ON.

28-SAMC, MA, ME, & MC E.O. AN8962

E.O. A2303

E.O. A84123

E.O. A46758

LET	ALTERATION	DATE	BY
A	[illegible]		
	[illegible]		
B	ADD -2 SUB ASSY TO [illegible]		
C	ADD 28E5785-6 & 28E5785-7 TO 28E5785-7 & NOTE "SHELLAC---" ---"SHELLAC"		
D	[illegible]		
E	CHANGE NOTE "APPLY 28E5785-6 ----"ES & ON, MAR." SHELLAC 28E5785-6 & 28E5785-7 TO INSIDE OF COVER 28E5634-7 ON RESPECTIVE BOXES & COVER WITH SHELLAC. FOR PBY-5, C.#1876, & PBY-5A, C.#8476 -SHIPS #53 & ON.		

© APPLY 28E5785-6 & 28E5785-7 TO INSIDE OF COVER 28E5634-7 ON RESPECTIVE BOXES. IF BLUE PRINT CUT OUT IS USED, APPLY WITH AND COVER OVER WITH SHELLAC.
FOR PBY-5, C.#1876, & PBY-5A, C.#8476— SHIPS #53 & ON.

◎ NOTE:
FOR SHIPS #53 & ON FOR CONTRACT 88476 SEE DRWG. 28E6275

ASSY CLASS & No.	MODEL	NEXT ASSY.	QTY.
-0	28-SAMN	[illegible]	1
-2	PBY-5	[illegible]	1
-0	PBY-5A	[illegible]	1
-0	28-SMC	[illegible]	1
-0	28-SME	[illegible]	1
-0	28-SMA	[illegible]	1
-0	28-SME	[illegible]	1

REQUIREMENTS PER AIRPLANE

REPLACED — Quan. Per.
REPLACED BY — Asy. Per.

SCALE 12" = 1'0"

28E5785-7
[illegible]
28E5785-6
NAF 213028-4
AC-[illegible]
AN-[illegible]
NAF-[illegible]
NAF-[illegible]
AN-[illegible]
AN-[illegible]
AN-[illegible]
C-6202-3
NAF-213019-4
AN3064-8
AN3066-8

ITEMS LISTED ON -5 & -7 SUB ASSYS

AN526-DD832-6

-7 SUB ASSY
-5 SUB ASSY

PART No.	STOCK	MATERIAL	SPEC.	LH RH	LH RH	LH RH	LH RH	LH RH
				REQ.	REQ.	REQ.	REQ.	REQ.
PARTS LIST PER ASSY.				-0	-2	-3	-4	-5

AC
NAVY MARK
HEAT TREAT — FINISH — DRAFT — CHECK — STRUCT — MAT — APPROV — ENG.
RELEASED 2-8-43 — 2-28-43 Brahm

NAME ASSY & INSTALL.-ELEC. CO-PILOTS HEATER JUNCTION BOX
CONSOLIDATED AIRCRAFT CORP. San Diego, Calif.
OFF. NAND None
SPEC. D
28E5638

LET	ALTERATION	DATE	BY
L	TRACED	7-12-43	DAD MWC
M	FOR -4 ASS'Y REMOVED Q6202-4(1). ADDED Q6202-5 (1) & DIMS. 1½, 7/16 & 2¼		
	WT. CHG. NEG	7-12-43	DAD MWC
N	ON FACE OF DWG. ADDED NOTE #3, IN VIEW -4 ASSY. REMOVED 398-5799-6 (1) AND ADDED 28E5857 (1) (NEG. WT. CHG.)	8-10-43	STROBEL

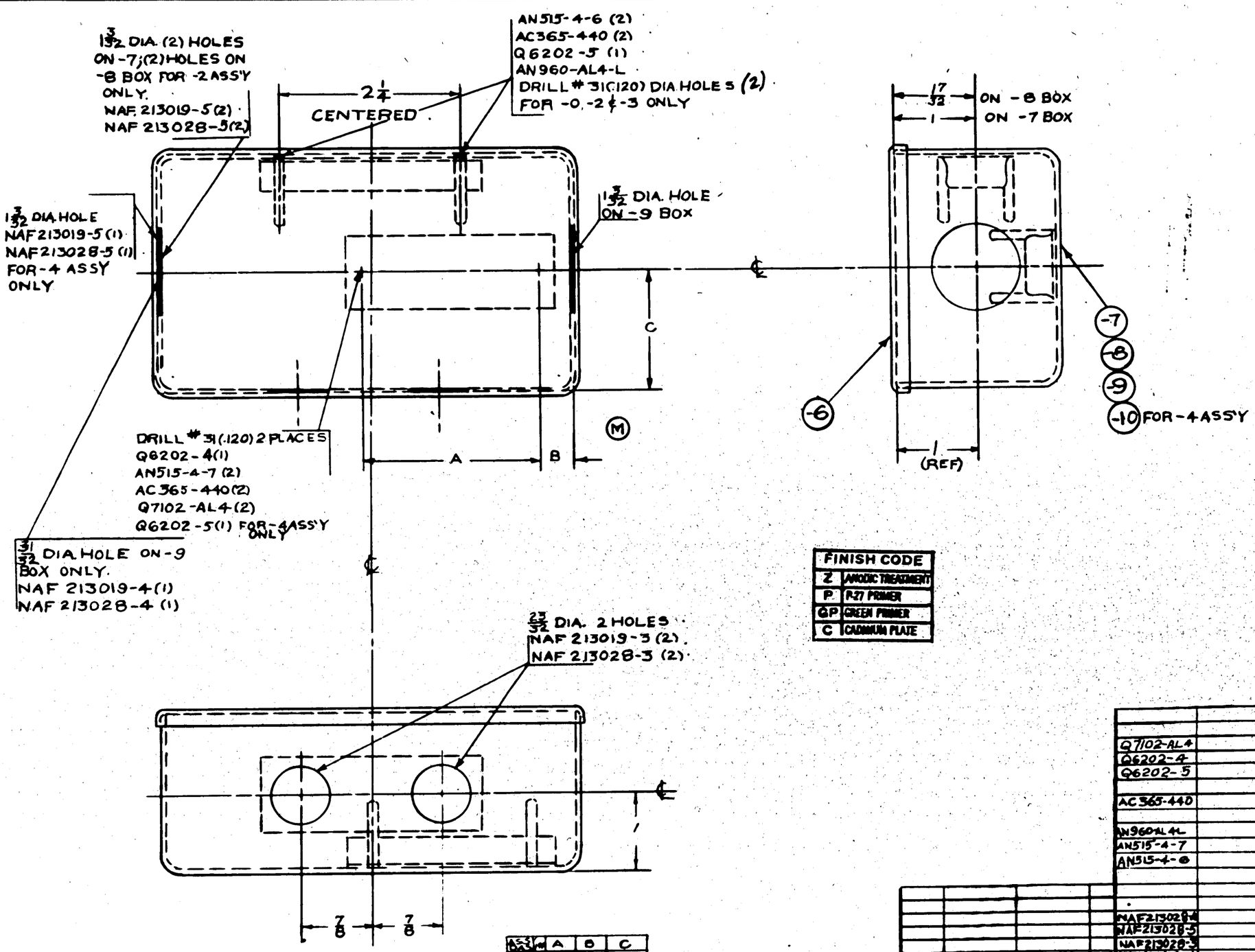

FINISH CODE	
Z	ANODIC TREATMENT
P	P-27 PRIMER
GP	GREEN PRIMER
C	CADMIUM PLATE

ASS'Y DASH NO.	A	B	C
-2	1½	7/16	1
-3	1½	7/16	1
-4	2¼	7/16	1½

MCR 164-4-1
C 88467 ONLY
C. 70496-77713

NOTE:
1. APPLY 28E5799-6 TO INSIDE OF COVER 28E5659-6. IF BLUE PRINT CUT OUT IS USED, APPLY WITH ℄ COVER OVER WITH SHELLAC. FOR CONT. #88476 PBY-5A (#53 ON).
2. REMOVE FINISH RADIALLY 3/32 AROUND EACH HOLE (4) PLACES.

BOX MAY BE MADE FROM WESTERN AIRCRAFT STANDARD PARTS.
*MAY BE PURCHASED FROM POULSEN & NARDON
(N) 3. APPLY 28E5857 TO INSIDE OF 28E5659-6 WITH SHELLAC AND COVER WITH SHELLAC FOR -4 ASS'Y. ONLY.

ASSY. DASH NO.	MODEL	NEXT ASSY.	REQ.
-3	285AMN	28E5660	1
-0	285AMC	28E5660	1
-4	PBY 5A	28E5660	1
-2	PBY 5A	28E5660	1
-0	PBY 5A	28E5660	1

REQUIREMENTS PER AIRPLANE

REPLACES 28E5659 2/10/41 — CALC. WT. .45 — ACT. WT.

REPLACED BY

LIMIT ON DIMENSIONS UNLESS OTHERWISE SPECIFIED ± 1/16 — SCALE 12" = 1'0"

STAMP PART NUMBER WHERE SHOWN

PART NO.	STOCK	MATERIAL	SPEC.	-0 LH	-0 RH	-2 LH	-2 RH	-3 LH	-3 RH	-4 LH	-4 RH	-5 LH	-5 RH
				REQ.	REQ.	REQ.	REQ.	REQ.	REQ.	REQ.	REQ.	REQ.	REQ.
Q7102-AL4						2	2	2		2			
Q6202-4						1		1					
Q6202-5				1		1		1		1			
AC365-440				2		2		4		2			
AN960AL4L				2		2		2					
AN515-4-7						2		2		2			
AN515-4-6				2		2		2					
NAF213028-4								1					
NAF213028-3				2		2		1		1			
NAF213020-3				2		2		2		2			
NAF213019-4								1					
NAF213019-3				2		2		1		1			
NAF213019-3				2		2		2		2			
28E5857										1			
28E5799-6						1							
-10	P/N 1195-200N											1	
-9	P/N 1195-200N							1					
-8	P/N 1195-200N					1							
* -7	P/N 1195-200N			1									
-6	P/N 1195-350			1		1		1		1			

PARTS LIST PER ASSY.

AC			2-10-41	KM	BMN
NAVY NONE	P-INSIDE P-A-P OUTSIDE		SALIZM 2/13/41		Eng'd 1-2-42
HEAT TREAT	FINISH		DRAFT	CHECK	STRUCT

BMN	Klein	McCABE	
MAT	APPROV	ENG.	

OPP. HAND

NAME JUNC. BOX ASSY-ELEC-PILOTS COMPT.-L.G. INDICATING LIGHTS

CONSOLIDATED VULTEE AIRCRAFT CORP. SAN DIEGO DIVISION . . SAN DIEGO, CALIF.

DWG. D SIZE 28E5659

R 28E5659

LET	ALTERATION	DATE	BY
A	ON RACE: STRINGER "229" STARBOARD SIDE STA 1.33 WAS 229 P.S. STA 1.33		
B	CHGD. LOCATION OF M.T.G. HOLES, 1/2 DIM. WAS 1.1/4 ADDED 1/4 + 2 1/2 DIM'S & ADDED 1/4 DIM. ADDED TERMINAL STRIP GROUP - 4 - 5, NO. WT. CHG.	4-10-41	MILLER
C	ADDED TO REQ'D FOR AC	6-18-41	GALLIA
	DWG. 28E5659-2, -3 PARTS ADDED TO REQ'D FOR AIRPLANE CANNON - 2 ASSY. 5 REQUIRED -0 ASSY. WITH -3 ASSY. FOR 28-SAMN.		
D	CHANGED -4 ASSY. -4 WT. .40.	11-8-41	[illegible]

E.O. No. A-28305

E.O. A37128 (ORC 144-4)

DRILL #18 (.169) DIA. (3) HOLES
LOCATE (2) BOTTOM HOLES FROM STRINGER
AN 526 DD 832-7 (3)
AC 365D832 (3)

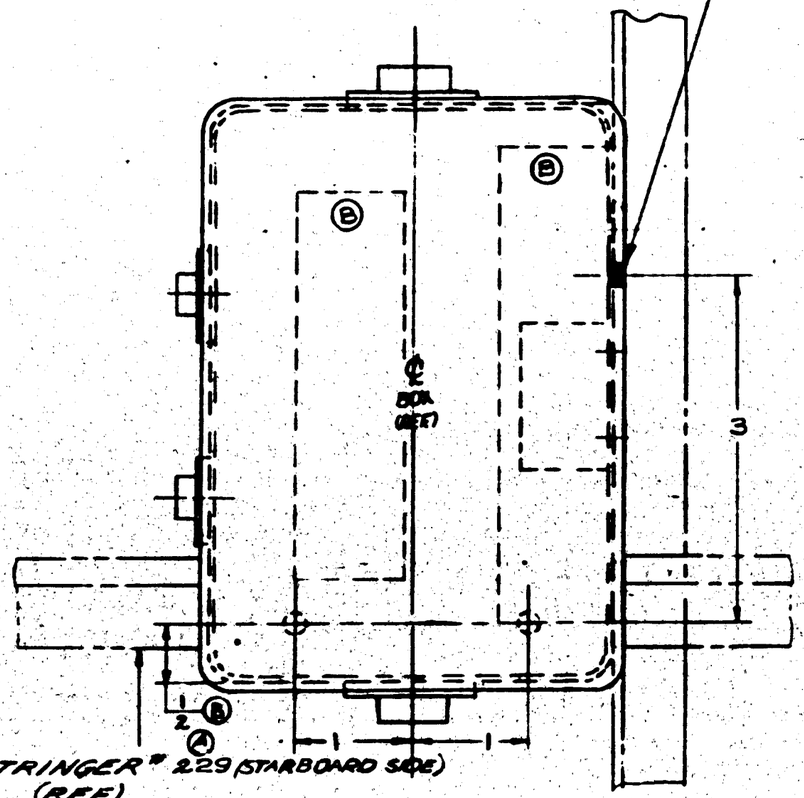

STRINGER # 229 (STARBOARD SIDE) (REF)

BELT FRAME # STATION 1.33

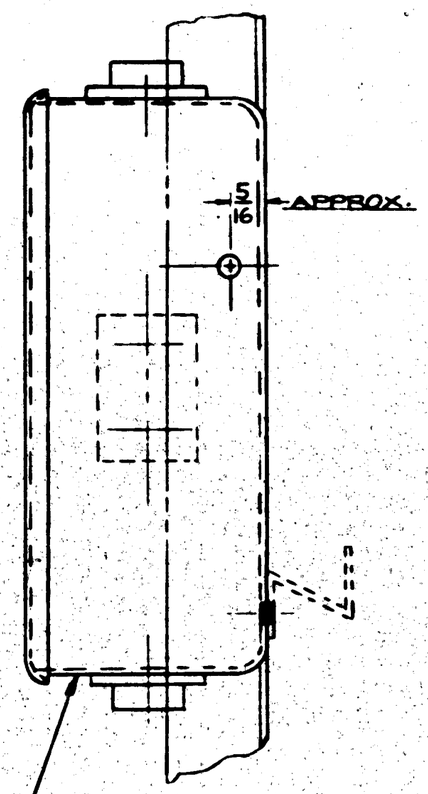

28E5659-0 FOR -0 ASSY
28E5659-2 FOR -2 ASSY (C)
28E5659-3 FOR -3 ASSY (C) (D)
28E5659-4 FOR -4 ASSY

VIEW LOOKING OUTBOARD

FORWARD

(C) CONTR. 88476 CONT. 13595 (Change-1)

(C) CONTR. 70496 & 77713

ASSY. DASH No.	MODEL	NEXT ASSY.	REQ.
-4	PBY-5A	28E1011	1
-2	PBY-5A	28E1011	1
-0	28-5AMC	28E1011	1
-3	28-5AMN	28E1011	1
-0	PBY5A	28E10N	1

REQUIREMENTS PER AIRPLANE

REPLACES

REPLACED BY

ACT. WT.

UNLESS OTHERWISE SPECIFIED DIMENSIONS ARE IN INCHES

SCALE 12" = 1'-0"

STAMP PART NUMBER WHERE SHOWN

PART No.	STOCK	MATERIAL	SPEC.	LH REQ.	RH REQ.	LH REQ.	RH REQ.	LH REQ.	RH REQ.
PARTS LIST PER ASSY.				-0	-2	-3	-4	-5	
28E5657-4							1		
28E5659-3				-	-	1	-		
28E5659-2				-	1	-	-		
28E5659-0				1	-	-			
-5									
AN 526 DD 832-7				3	3	3	3		
AC 365 D832				3	3	3	3		

AC		2-12-41	[illegible]		[illegible]	[illegible]	[illegible]
NAVY NONE	NONE	GALLIA	[illegible]		LCE.	[illegible]	[illegible]
HEAT TREAT	FINISH	DRAFT	CHECK	STRUCT	MAT	APPR.	ENG.

NAME INST. BOX-ELEC.-PILOTS COMPT. LG INDIC. LIGHTS

OPP. HAND

CONSOLIDATED AIRCRAFT CORP. San Diego, Calif.

DWG. SIZE D

28E5660

LET	ALTERATION	DATE	BY
	-4 ASSY SERIAL AS -0		
	EXCEPT ADDED -10 BOX TO		
	BRACE - (CHANN. CRADLED INSIDE		
	-8 WITH 28BE[illegible] ASSY		
	ASSY, REMOVED FROM -4 ASSY-10		
	MAF 213019-6 TO MAF 213019-8		
	MAF 213028-6 TO MAF 213028-8		
	ADDED INSULATIONS FOR -0 ASSY		
H	ADDED TO 28 FOR -4 ASSY.		
	MAF 213028-8(1) (MAF 213028-6		
	(2) REMOVED FROM 28 ASSEMBLY		
	INSULATION, GAL. METAL COVER &		
	REMOVED STOCK FROM OF BRKT		
	NOTE "G.P.E. ---- GRADE" WT. CHANGE	7-17-41	
J	NOTE "I" FINISH ---- ONLY INSIDE		
	"FINISH -6, -7 & -8 FINISHED (P-27		
	OUTSIDE" WT. CHG. NOTE.	7-25-41	
K	FOR -4 ASSY 28E5836 WAS		
	28E5781-6, WT. CHANGED	8-11-41	

E.O. 37704 FOR -5A 10-15-41 -10

P

LET	ALTERATION	DATE	BY
A	[illegible] REPLACED W/ [illegible]		
	[illegible] ADDED DIMS. 2 & 4		
	ADDED DIM. 2 3/8		
A	W/ 3/16 FACE OF DRWG.		
	REMOVE NAF 213028-2 (3)		
	NAF 213028-3(1) WAS (4)		
	ADDED 28E5836(-10) FOR 28E5040		
	NAF 1023-19 (1), MAZDA #303 (1),		
	Q6202-2(1), AN515-4-6 (4),		
	WAS (2) AN340-4 (4) WAS (2)		
	CHANGED NAF 1023-15 WAS		
	AN1023-15	9-16	MCCS
C	ON FC. OF DRS. & 4 FOR -2 ASSY	10-20-41	MILLS
	REMOVED -6 BOX, NAF 213019-6 (1) &		
	NAF 213028-6(1) & REPLACED WITH		
	-8 BOX, NAF 213019-8(1) & NAF 213028-8(1)		
	ON -0 & -2 ASSY ADDED AN935-8(3)		
	ON FC. OF DRS. - PLAN VIEW 1 7/32 D HOLE		
	CALLED OUT FOR -6 BOX 1 15/32 D HOLE		
	FOR -8 BOX, CREATED -3 ASSY FOR		
	28-SAMN.		
D	CANCEL C'CHANGE OF 10-20-41	11-17-41	MILLS
	RUSH RELEASED INCORRECTLY.		
	C'CNGE OF 10-28-41 CORRECT		
E	ADDED 28E5781-6 & NOTE		
	SHELLAC..... SCHELLAC. WT.		
	CHG. NEG.		
F	AN515-8-10(3) WAS AN515-8-7(3).		
	NEG. WT. CHG.		

E.O. A56720

E.O. A56059

FINISH CODE	
Z	ANODIC TREATMENT
P	P-27 PRIMER
GP	GREEN PRIMER
C	CADMIUM PLATE

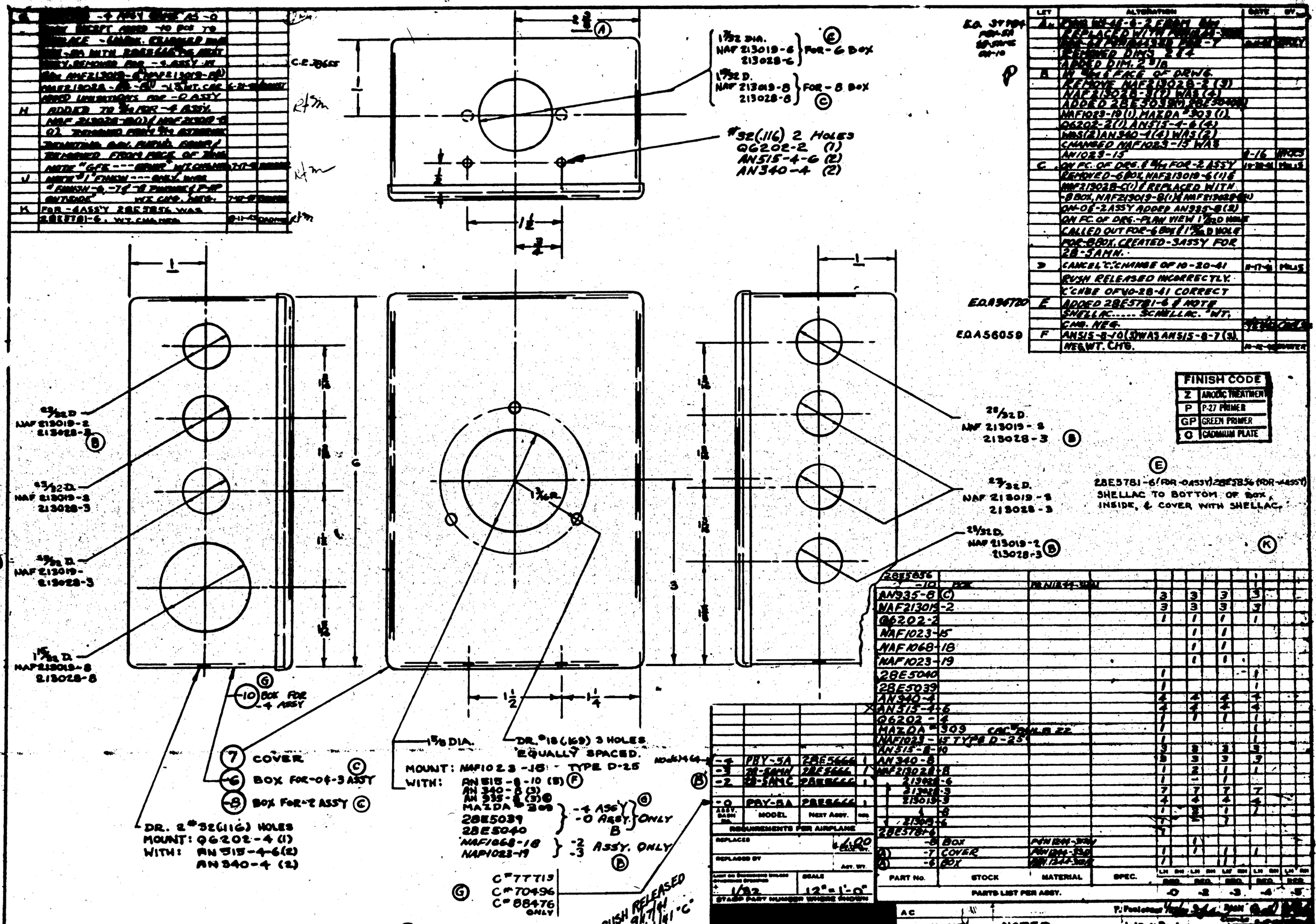

ASSY. DASH NO.	MODEL	NEXT ASSY.	REQ'D
-4	PBY-5A	28E5666	1
-3	28-SAMN	28E5666	1
-2	28-SAMC	28E5666	1
-0	PBY-5A	28E5666	1

REQUIREMENTS PER AIRPLANE

REPLACES — REPLACED BY — ADV. WT. 6.00 C.G.

BASIC ON ENGINEERING STANDARDS APPROVED — SCALE 1/32 — 12" = 1'-0"

STANDARD PART NUMBERS WHERE SHOWN

PART NO.	STOCK	MATERIAL	SPEC.	LH DWG REQ'D	RH DWG REQ'D	LH DWG REQ'D	RH DWG REQ'D	LH DWG REQ'D	RH DWG REQ'D
28E5836 -10	BOX	[illegible]						1	
AN935-8	C			3	3	3	3	3	
NAF 213019-2				3	3	3	3	3	
Q6202-2				1	1	1	1	1	
NAF 1023-15					1	1			
NAF 1068-18					1	1			
NAF 1023-19					1	1			
28E5040				1				1	
28E5039				1				1	
AN340-4				4	4	4	4	4	
AN515-4-6				4	4	4	4	4	
Q6202-4				1	1	1	1	1	
MAZDA #303		CAC [illegible]		1				1	
NAF 1023-15		TYPE D-25		1				1	
AN515-8-10				3	3	3	3	3	
AN340-8				3	3	3	3	3	
NAF 213028-8				1	2	1	1	1	
213028-6				1	--	1			
213028-3				7	7	7	7	7	
213019-3				4	4	4	4	4	
-8				1	2	1	1	1	
213019-6				1	--	1			
28E5781-6				1					
-8	BOX	[illegible]			1				
-7	COVER	[illegible]		1		1	1		
-6	BOX	[illegible]		1					

PARTS LIST PER ASSY. -0 -2 -3 -4 -5

AC — NAVY NONE — HEAT TREAT — NOTED — FINISH — 1-17-41 — DRAFT CHECK STRUCT. ENG. APPROVED

NAME BOX ASS'Y - ELEC. - MECH'S COMP'T LT. & JUNCTION.

CONSOLIDATED AIRCRAFT CORP. San Diego, Calif.

OPP. HAND None

SIZE D — 28E5665

(G) WT. NOTE (CALC.)
-4 ASSY .87#

(J) NOTES: (1) FINISH -6, -7, -8, -10 P-6P OUTSIDE ONLY.
(2) REMOVE FINISH 3/32 RAD AROUND HOLES

(E) 28E5781-6 (FOR -4 ASSY) 28E5856 (FOR -4 ASSY) SHELLAC TO BOTTOM OF BOX, INSIDE, & COVER WITH SHELLAC.

(K)

(N)

LET	ALTERATION	DATE	BY

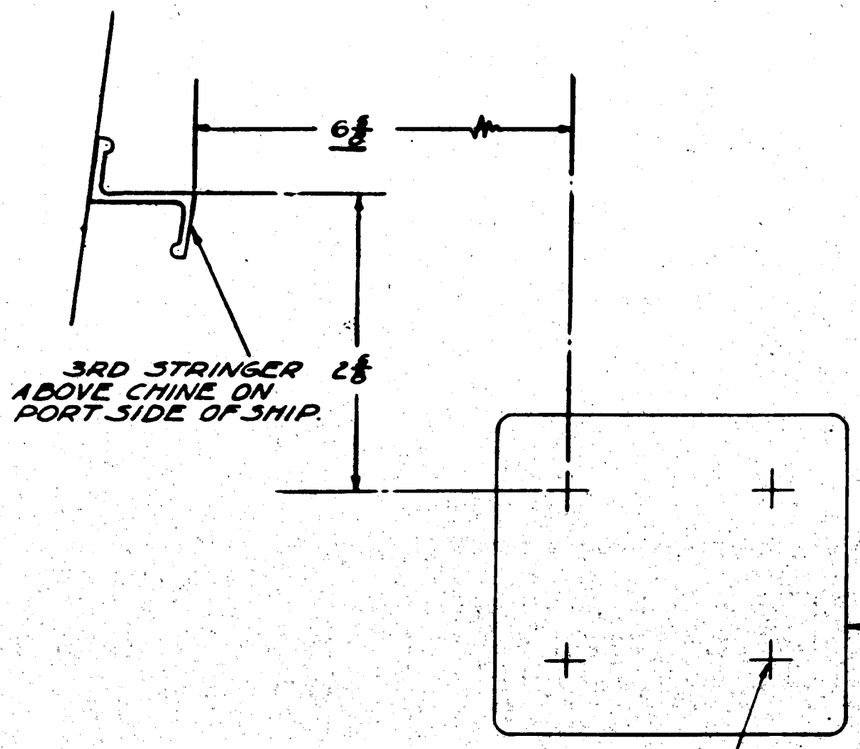

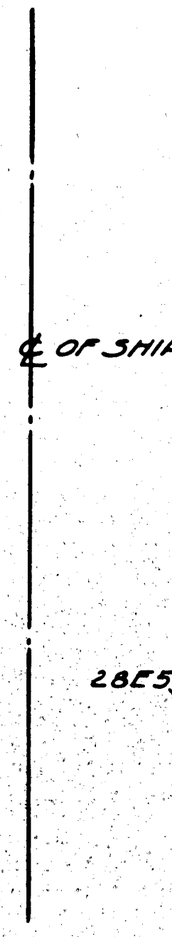

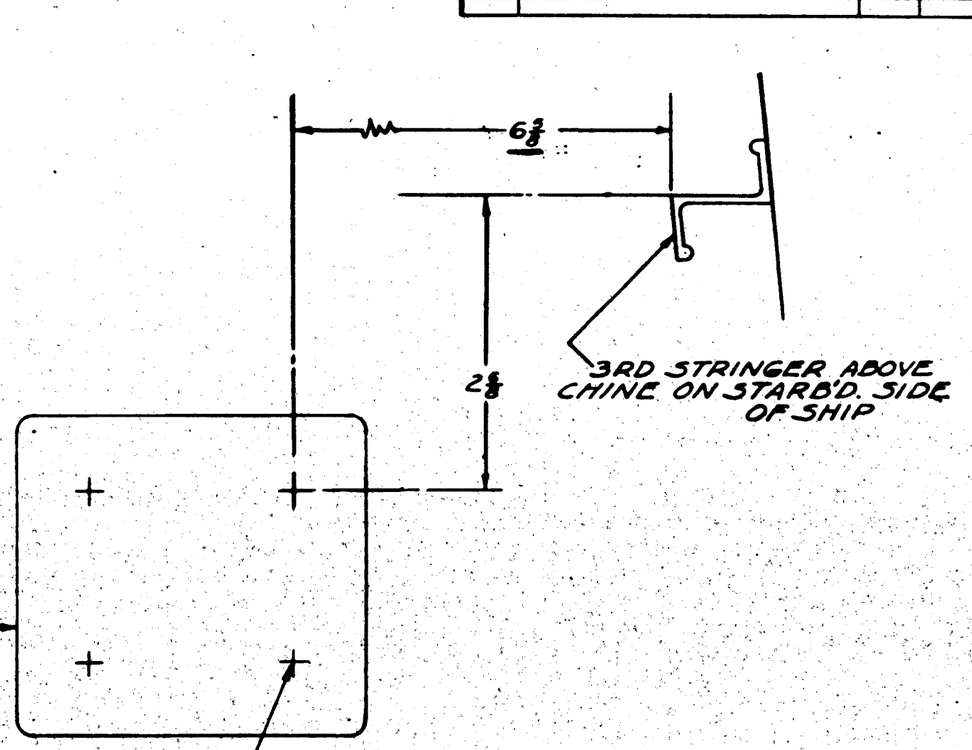

INSTALLATION ON BULKHEAD #5 AFT SIDE LOOKING FORWARD.

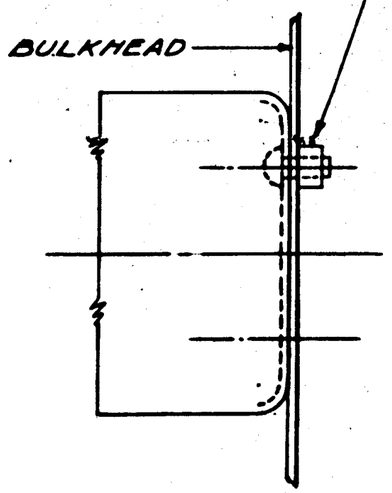

NOTE: THIS DWG. (28E5689) IS APPLICABLE TO PBY-5A SHIPS SERIAL NOS 2486, 2487 & 2488.

ASSY. DASH NO.	MODEL	NEXT ASSY.	REQ'D
-2	PBY-5A	28E5648	1
-0	PBY-5A	28E5648	1

REQUIREMENTS PER AIRPLANE

REPLACES	QUAL. QTY.
REPLACED BY	ASY. QTY.

SCALE 12"=1'-0" ± 1/32

PART No.	STOCK	MATERIAL	SPEC.	LH REQ'D -0	RH REQ'D -0	LH REQ'D -2	RH REQ'D -2	LH REQ'D -3	RH REQ'D -3	LH REQ'D -4	RH REQ'D -4	LH REQ'D -5	RH REQ'D -5
AN-526-DD1032-6 RIVS.				4	4	4	4						
AN-365-D 1032 NUTS													
28E5691-2								1		1			
28E5691-0				1									
-4													

PARTS LIST PER ASSY.

AS		CURRENT		DRAFT		
NAVY NONE	NOTED ON DETAIL	4/29/41		CHECK		
HEAT TREAT	FINISH	DRAFT	CHECK	STRESS	MAT'L APPROV	ENG.

NAME INSTALLATION - ELEC. CAMERA SIGNAL BOX

OPP. HAND

CONSOLIDATED AIRCRAFT CORP. San Diego, Calif.

SIZE D

28E5689

28-5ME, 28-5MEC, 28-5MEC.A, 28-5MA
28-5MC, 28-5MA
E.O. A 56026
E.O. A 56020

MCR 246

LTR	DESCRIPTION	DATE	BY
E	[illegible]		
D	[illegible]		
C	[illegible]		
B	[illegible]		
A	[illegible]		
F	[illegible]		

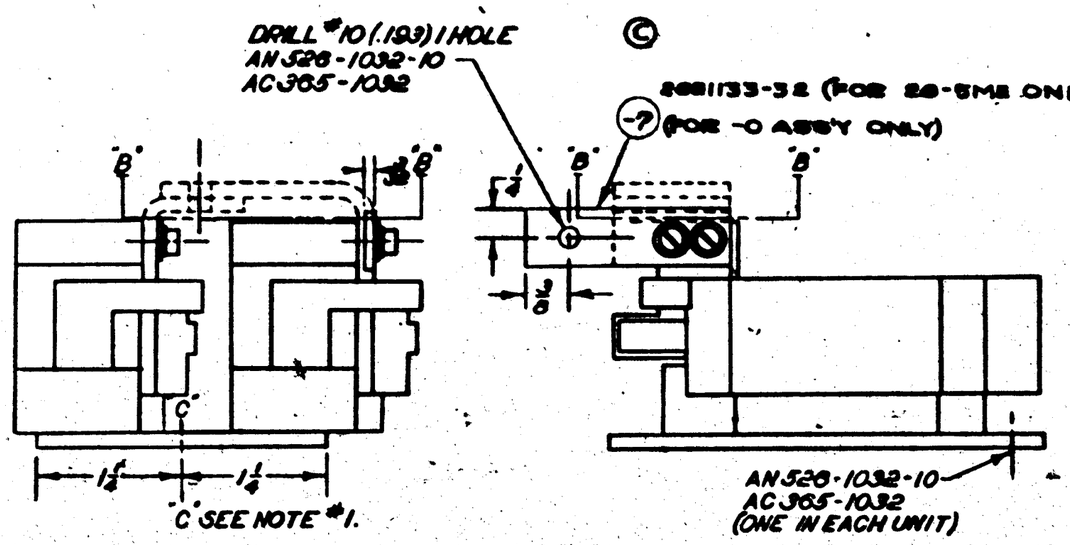

(C) 2881133-52 (FOR 28-5ME ONLY)
(-7) (FOR -0 ASS'Y ONLY)

NOTES:

1.-MODIFY BY CUTTING ALONG LINES INDICATED BY BB & CC. SEND SEGMENTS SHOWN DOTTED AT BB TO SCRAP.
REMOUNT PORTION OF RELAY, SHOWN IN HEAVY OUTLINE, ON ½ OF MTG. PLATE FURNISHED WITH RELAY, TO MAKE AN ASS'Y IDENTICAL TO REMAINING PORTION.

2.-NOTE THAT TWO IDENTICAL RELAY ASS'YS ARE ESTABLISHED BY THIS DWG. & THAT BOTH SHOULD BE UTILIZED (ONE PER SHIP) TO AVOID STOCKING UP OF NON-STANDARD PARTS.

3.-THE MAJOR DIFF. BETWEEN GTR-70A2 & GTR-70B1 RELAYS IS IN THE BASE. THE -2 ASS'Y BOTTOM VIEW IS THE BASE OF THE GTR-70B1 RELAY. THESE RELAYS COME SEPARATE & DO NOT HAVE TO BE DIVIDED. GTR-70A2 & GTR-70B1 RELAYS MAY BE PURCHASED FROM GEN. ELEC., LOS ANGELES, CALIF.

4.-MATERIAL FOR -7: COPPER BAR, SPEC. QQ-C-501, TEMPER, SOFT, LIGHT COLD ROLLED, OR HARD.

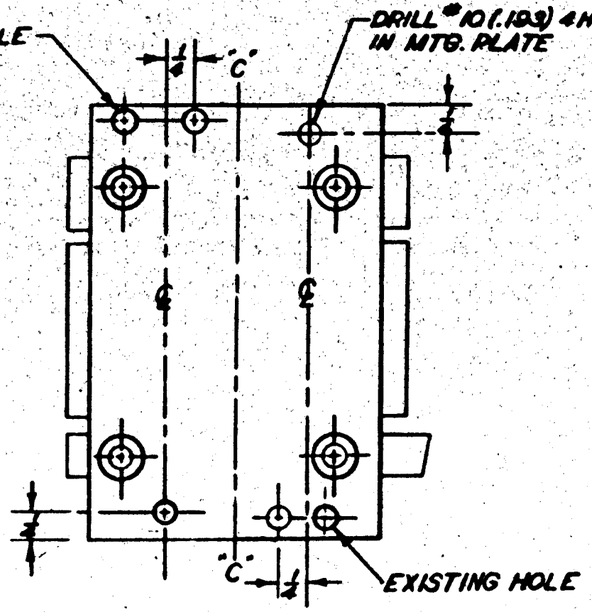

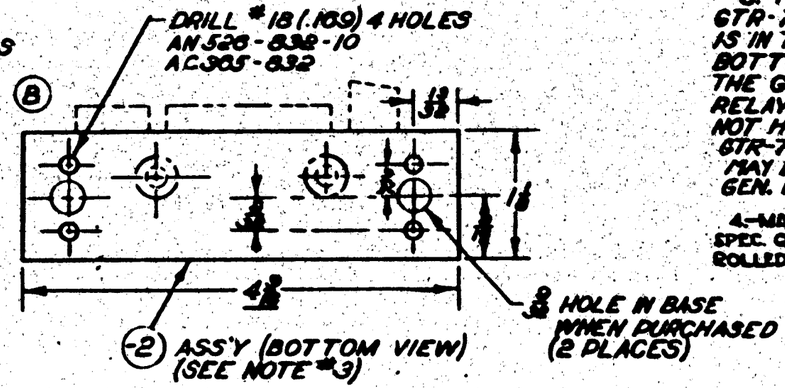

SEE NOTE #2.

ASS'Y DASH NO.	MODEL	NEXT ASS'Y	QTY.
	MFR.		
-0	GE-MARK		
-0	[illegible]		
-0	[illegible]		
-0	[illegible]		
-0	[illegible]		
-0	[illegible]		
-0	[illegible]		
-0	[illegible]		
-2	[illegible]		
-2	[illegible]		
-2	[illegible]		
-2	[illegible]		
-0	[illegible]		
-0	[illegible]		

(USE 2881176) (C-2881176) -29-146
(C-2881176) -29-146 ONLY
(C-2881176) -1-20
#1-29
C-70496 - C-77118
& C-2881176 ONLY
-2 PBY-5A 2885743
-2 28-5MC 2885883
-2 28-5ME 2885883
-0 28-5ME 2885883
21 & ON #1 TO 20

SEE NOTE #2 ABOVE FOR -0 ASS'Y & NOTE #3 FOR -2 ASS'Y

REQUIREMENTS PER AIRPLANE

REPLACES		QTY.
28E5604	3-7-41	A3
REPLACED BY		ASS'Y QTY.

SCALE 12" = 1'-0"

(2881133-52) (FOR 28-5ME ONLY)

AN 526-832-10
AC 365-832
GTR-70B1 RELAY (MAKES 1 PIECE)
AN 526-1032-10
AC 365-1032
-7 [illegible] NOTED NOTED
-0 GTR-70A2 RELAY (MAKES 2 PIECES)

PART NO.	STOCK	MATERIAL	SPEC.	LH BRD REQ. -0	RH BRD REQ. -0	LH BRD REQ. -2	RH BRD REQ. -2	LH BRD REQ. -3	RH BRD REQ. -3
PARTS LIST FOR ASS'Y.									

A.C.			
NAVY NOTED	NONE	9-18-41	
HEAT TREAT	FINISH	DRAFT	CHECK / STRUCT / DAT / APPROV / ENGR

NAME ASS'Y - ELECT. RELAY - STEWART-WARNER HTR. SYST.

OPP. HAND NONE

CONSOLIDATED AIRCRAFT CORP. San Diego, Calif.

SIZE D

28E5604

LET	ALTERATION	CHK	APP
A	CREATED C-1005		
	DRAWING AS PER ENGINEERING FORM 28E-5 [illegible]		
	7-6-42		

28E5736-D FOR-D ASSY ONLY
28E5736-E FOR-E ASSY ONLY
(A)

28B1145 (REF.)

NAF 2/3017-3 (1) } FOR-D
NAF 2/3018-3 (1) } ASS'Y ONLY

28E5737

OIL - DILUTE
ON ON

LEFT RIGHT
ENGINE

AN515D8-7 (4)
AC365D832 (4)

NAF 2/3021-3-10 (1)
NAF 2/3017-3 (1)
NAF 2/3018-3 (1)
NAF 2/3019-3 (1)
NAF 2/3028-3 (1) } FOR-D ASSY ONLY
(A)
NAF 1150-6A-40 (1)
AN 3064-6 (1)
AN 3066-6 (1) } FOR-E ASSY ONLY

28B2041 (REF.)
MECH'S PANEL (REF.)

A

A

MECH'S PANEL

3/16

*10 (.193) 1 HOLE IN 28BN45-7 (REF.)
Q 812 D-7-20 (1)
Q 5106 D10-18 (1)
AC365D1032 (1)

AN3016 (2)
28E1133-9 (1)

*10 (.193) 2 HOLES IN STR.
Q5106D10-8 (2)
AC365D1032 (2)

28B1005-33 (REF.)

SKIN (REF.)

APPROX. 12 7/8 TO ℄.

VIEW A-A

C.-77713 & 88476
C.-91876

STARBOARD SIDE,
LOOKING OUTBOARD

PART NO.	STOCK	MATERIAL	SPEC.	LH RH REQ. -0	LH RH REQ. -2	LH RH REQ. -3	LH RH REQ. -4	LH RH REQ. -5
AN 506-6				1		1		
AN 508A-2					1		1	
NAF 1150-6A-40				1		1		
NAF 2/3028-3				1		1		
NAF 2/3021-3-10				1		1		
NAF 2/3017-3				1		1		
NAF 2/3018-3				1		1		
NAF 2/3019-3				2		2		
NAF 2/3017-3				2		2		
Q 812 D-7-20				1		1		
Q 5106 D10-8				2		2		
Q 5106 D10-18				1		1		
AN 515 D8-7				4		4		
AN 506-6				3		3		
AC 365 D1032				5		5		
AC 365 D832				4		4		
28B5736					1		1	
28E1133-9				1		1		
28E5737				1		1		
28E5126				1				

PARTS LIST PER ASSY.

-2	PRY-5A	28E5663	1
-2	PRY-5	28E1013	1
-D	28-SAMC	28E5662	1

ASSY. DASH NO. | MODEL | PRINT ASSY. | QUAN.

REQUIREMENTS PER AIRPLANE

REPLACED 28E5.06-SAMC
5-30-41 FOR 28-SAMC. | QUAN. WT.

REPLACED BY | ASY. WT.

SCALE 12"=1'-0"

AC
NAVY
HEAT TREAT | FINISH

A-2-41 | 10-8-41 | DRAFT | CHECK | STRUCT | MAT | APPROV | ENG.

NAME ASSY & INSTAL.-ELEC.-OIL-DILUTION SOLENOID-SW. JUNCTION-BOX-MECH'S COMPT.

CONSOLIDATED AIRCRAFT CORP. San Diego, Calif.

OPP. HAND NONE

DWG. D | 28E5135

SIZE

LET	ALTERATION	DATE	BY
A	-2 ASSY		

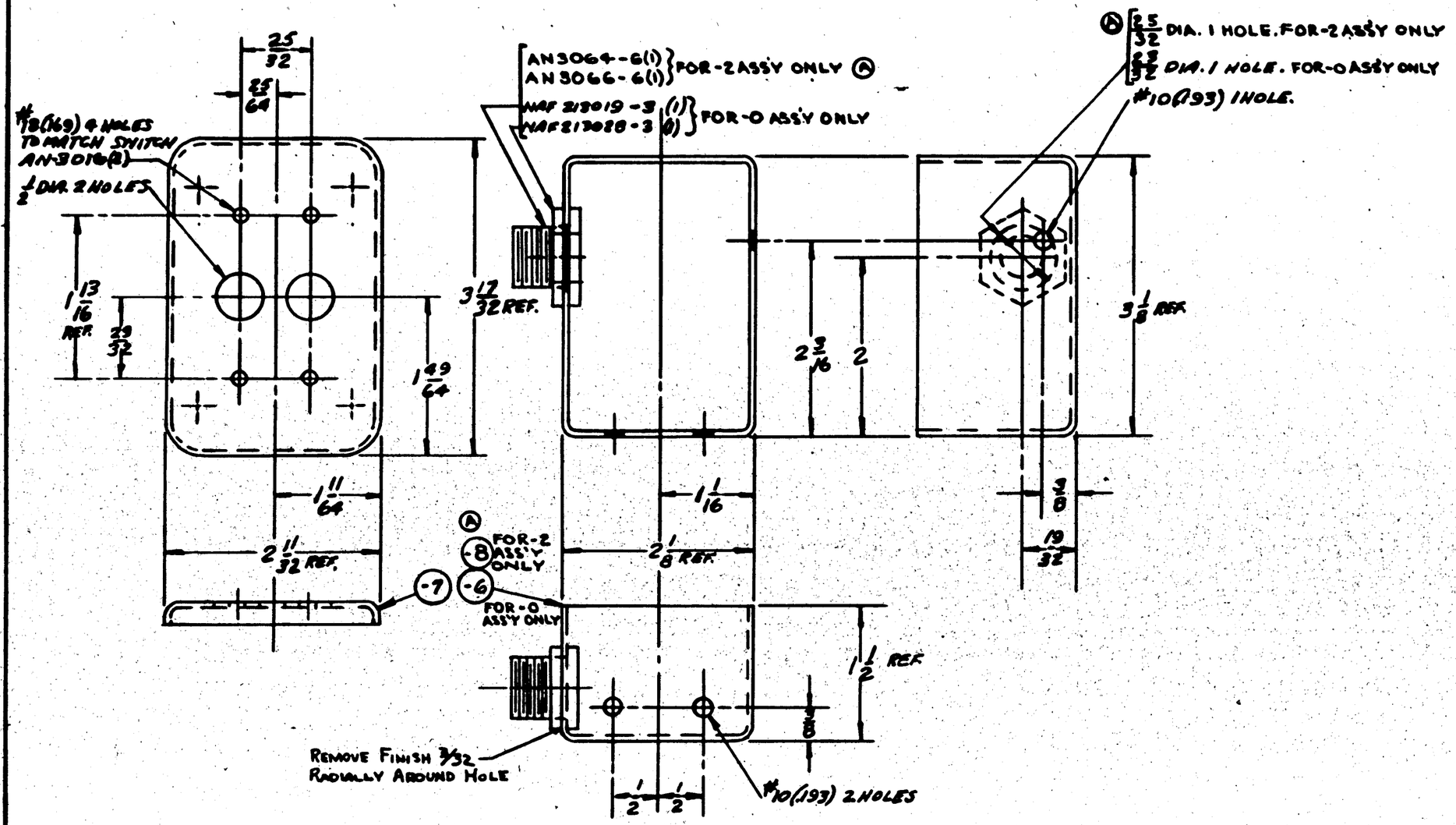

FINISH CODE	
Z	ANODIC TREATMENT
P	P-17 PRIMER
AP	ALUMINIZED PRIMER
C	CADMIUM PLATE

NOTES:-

1.- FINISH "P" ON INSIDE
FINISH "P-AP" ON OUTSIDE.

2.- MAY BE PURCHASED FROM POULSEN & NARDON, LOS ANGELES, CAL. OR MONARCH TOOL, SAN DIEGO, CAL.
PEN-1065-350 & 1065-116N } CAC. STOCK
M.T.-CSD-1004 & 1004R-116 } BOX NR 18

C.91876
C.77113 & 88476

Ross Release 10-1-41

-2	P&Y-5	28E5735	1		
-2	P&Y-5A	28E5735	1		
-0	28-50A1C	28E5735	1	MAF 213020-3	1
ASSY. DASH NO.	MODEL	NEXT ASSY.	REQ.	MAF 213019-3	1
				AN3064-6	
				AN3066-6	
				-8 BOX	
				-7 COVER } C.A.C. BOX NR 18	1
				-6 BOX	1

REQUIREMENTS PER AIRPLANE

REPLACES — CALC. WT.

REPLACED BY — ADV. WT.

SCALE 12" = 1'-0

± 1/32 STAMP PART NUMBER WHERE SHOWN

PART No.	STOCK	MATERIAL	SPEC.	LH REQ. -0	RH REQ. -2	LH REQ. -3	RH REQ. -4	LH REQ. -5	RH REQ. -6
PARTS LIST PER ASSY.									

AC / NAVY		10-1-41	Approved Drawing					
HEAT TREAT	SEE NOTE #1 FINISH	DRAFT	CHECK	STRUCT	MAT	APPROV	ENG.	10-14-41

NAME BOX ASSY-ELEC-OIL DILUTION SOLENOID SWITCH JUNCTION BOX

CONSOLIDATED AIRCRAFT CORP. SAN DIEGO, CALIF.

OPP. HAND

SIZE D — 28E5736

LET	ALTERATION	DATE	BY
A	REROUTED WIRES	2-21-41	

E.O. #18604

WIRE NO.	760	—	763	764	765	766	—	767	768	366	367	771	772	—	774	775	—	777	778	779	780	781
SIZE-AN NO	20	→	16	16	16	12	—	16	12	12	12	16	16	—	16	8	—	20	16	16	16	16
LENGTH (FT)	17	—	2	15	10	22	—	10	10	1	1	2	20	—	27	3	—	10	10	8	3	4

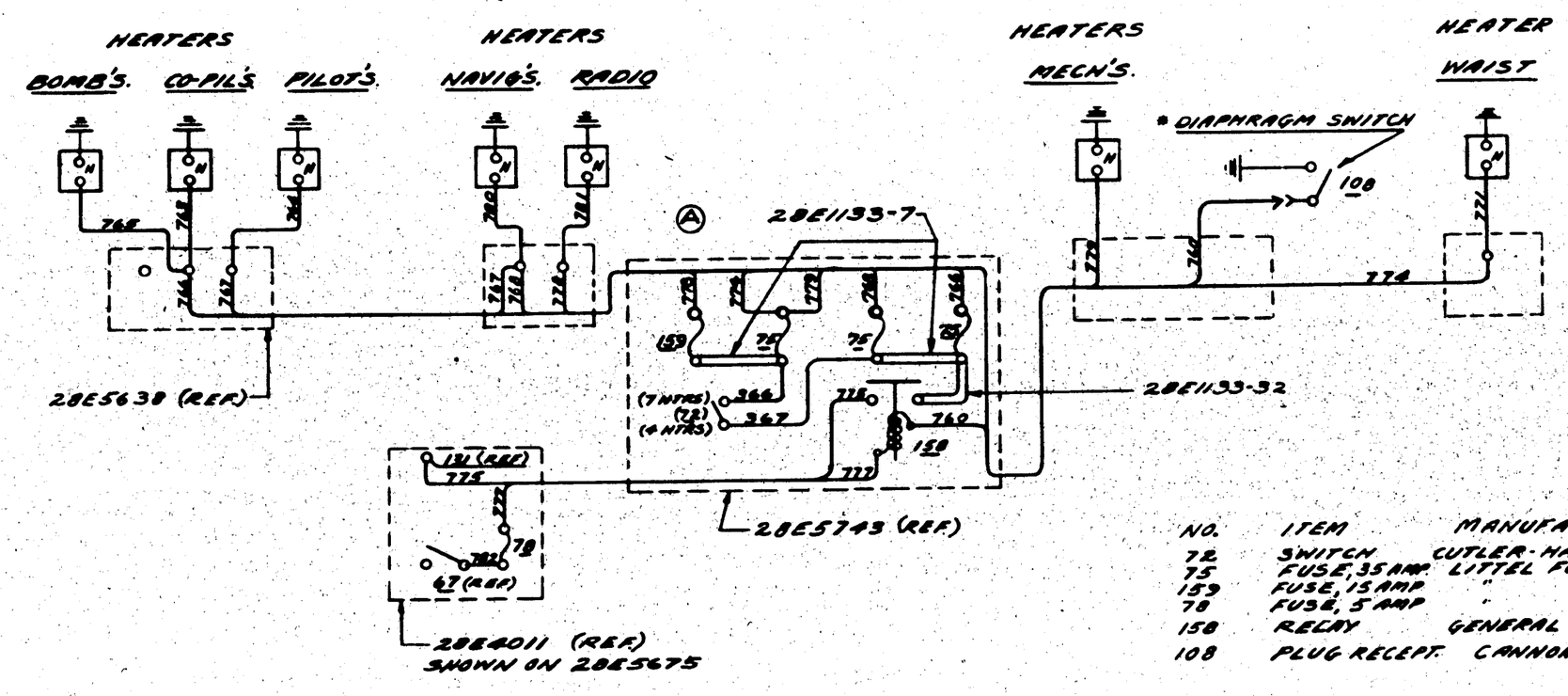

NO.	ITEM	MANUFACTURER	TYPE	DRW'G. REF.	REQ
72	SWITCH	CUTLER-HAMMER INC.	D-5A	AN 3015 (NAF 2/3030-1)	1
75	FUSE, 35 AMP.	LITTEL FUSE CORP.	4AG	NAF 1034-4-35	3
153	FUSE, 15 AMP	" " "	4AG	NAF 1034-4-15	1
78	FUSE, 5 AMP	" " "	4AG	NAF 1034-4-5	1
158	RELAY	GENERAL ELEC. CO.	GTR70A2 (A00)	28E5	1
108	PLUG RECEPT.	CANNON ELEC. DEV. CO.	CANNON	AN 3106-12S-4S	1

CONTRACTS #W-535-AC-7713 #W-604-ac-7713

ASSY. DASH NO.	MODEL	NEXT ASSY.	REQ.
-0	PBY-5A	28E5056	1

REQUIREMENTS PER AIRPLANE

REPLACES — CALC WT.

REPLACED BY — ACT. WT.

LIMIT OF DIMENSIONS UNLESS OTHERWISE SPECIFIED: + NONE — SCALE NONE

STAMP PART NUMBER WHERE SHOWN

PART NO.	STOCK	MATERIAL	SPEC.	LH REQ.	RH REQ.	LH REQ.	RH REQ.	LH REQ.	RH REQ.	LH REQ.	RH REQ.	LH REQ.	RH REQ.
-0	WIRE AS NOTED												
-2													
-3													
-4													
-5													

PARTS LIST PER ASSY.

AC ——	——	10-28-41	2-21-41			
NAVY NONE	NONE	GALIZIA			11-24-41	
HEAT TREAT	FINISH	DRAFT	CHECK	STRUCT	MAT	APPROV	ENG.

NAME WIRING DIAGRAM - ELEC. HT'G. SYST. STWT. WARNER

CONSOLIDATED AIRCRAFT CORP. SAN DIEGO, CALIF.

OPP. HAND ——

SIZE D — DWG. 28E5741

* FURNISHED WITH STEWART-WARNER EQUIPMENT

NOTE:
THIS IS NOT A CONSTRUCTION DRAWING
THIS APPLIES ONLY TO THE STEWART-WARNER
HEATING SYSTEM.

RUSH RELEASED 10/7/41

R

LET	ALTERATION	DATE	BY
A	ADDED HEATER NOTE	11-18-42	[illegible]
B	REMOVED NOTE: "DO NOT RETURN		
	SWITCH..... ARE BURNING." REPLACED		
	WITH "DO NOT TURN ..... 4 HEATER	4-4-42	Sheppard
	POSITION." (NO WT. CHG.)		
C	CREATED -2 ASS'Y. IN REQ/AIRPLANE	4-4-42	Sheppard
	ADDED -2 FOR PBY-5 NEXT ASS'Y		
	28E5743, 1 REQ. ADDED #10 HOLES		
	NOTE. 31/32 DIA HOLE REPLACED WITH		
	29/32 DIA HOLE IN -8, 1 3/32 DIA HOLE		
	REPLACED WITH 1 1/32 HOLE IN -8		
	(NO WT. CHG).		
D	RELOCATED 2 #18 HOLES ON -6 BOX	4-4-42	Sheppard
	1 13/16 WAS 1 3/16, 1 5/16 WAS 1 3/16, 2 29/32 WAS 2 3/16		
	ADDED 4 #18 HOLES & LOC. DIM. (NO WT. CHG.)		
E	REMOVED #18(.169) 2 HOLES, 1/2 D HOLE, '8	4-4-42	Sheppard
	HEATERS "4" 7 HEATERS & RELOCATED		
	SAME ON SIDE OF -6 & -8 BOX, RELOCATED		
	WARNING NOTE TO R.H. SIDE OF COVER	NO WT CHG.	

E.O. A 27606

INCORA BUR. AERO. CHANGE #37 - MODEL PBY-5A

E.O. A 20045

E.O. A 21105A

E.O. A 32284

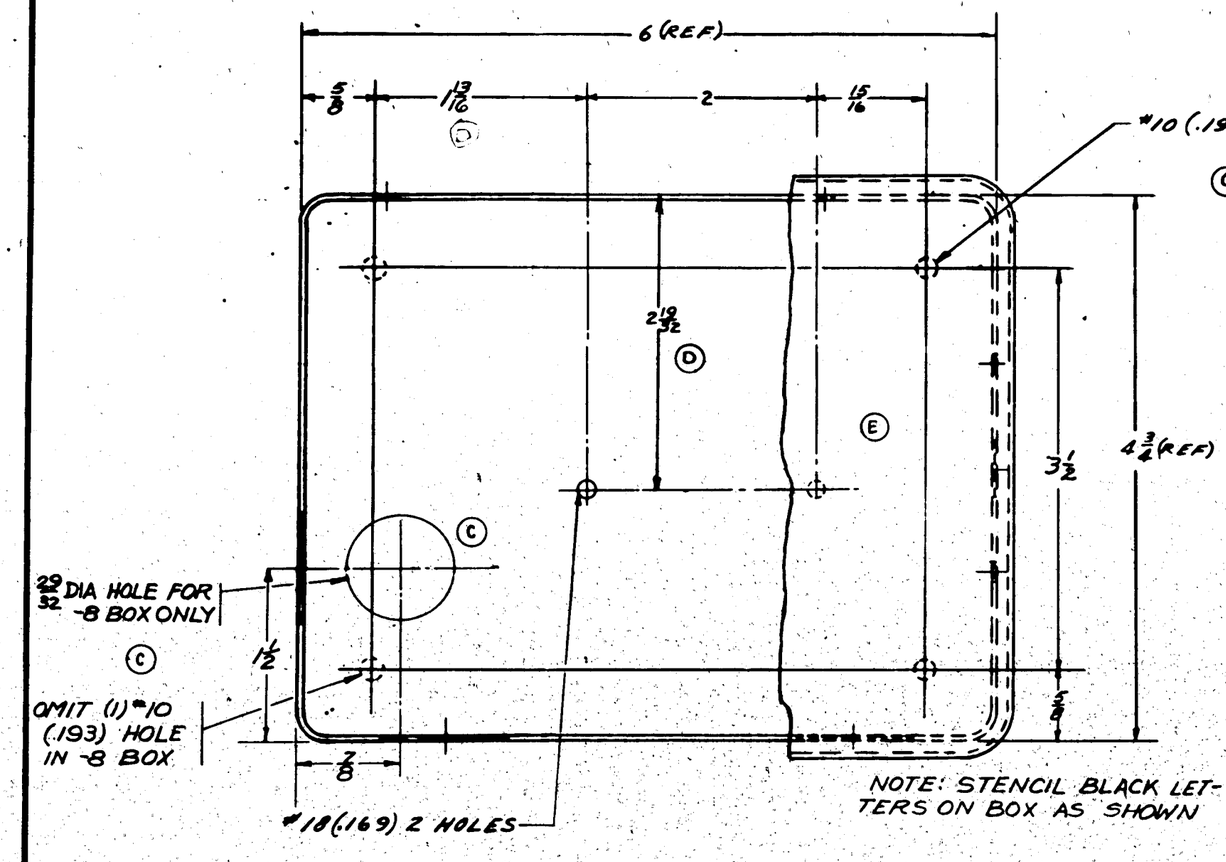

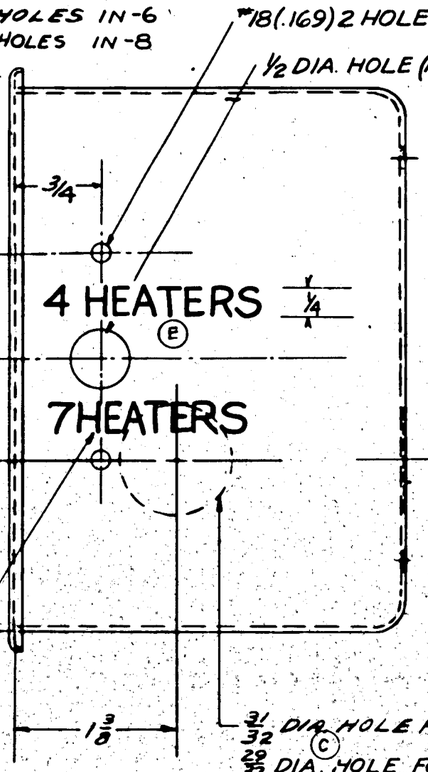

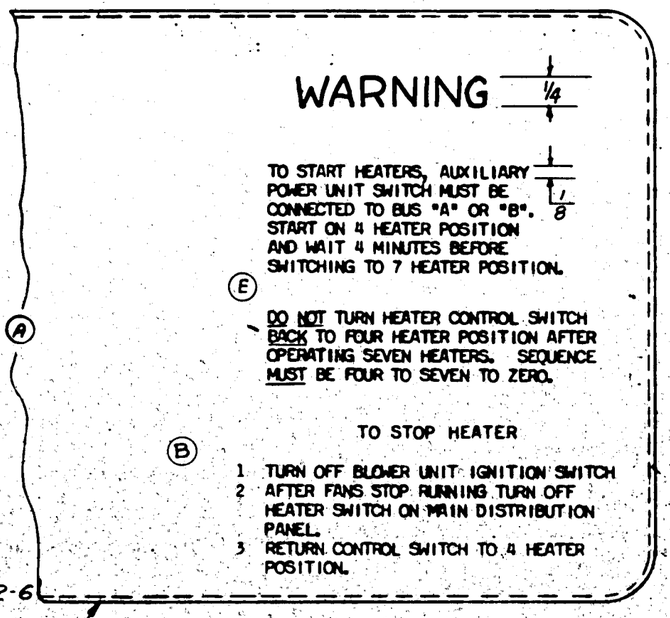

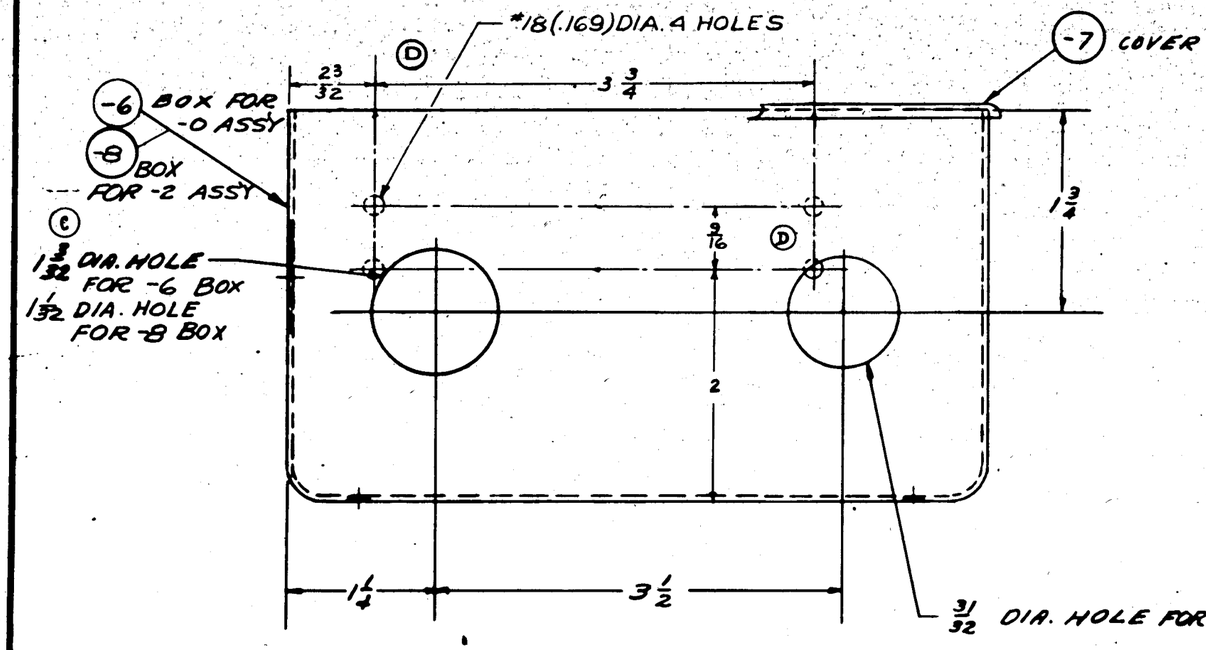

-7 (REF.) STENCIL BLACK LETTERS ON COVER AS SHOWN

NOTES

BOX MAY BE PURCHASED FROM POULSEN & NARDON CO.
BOX 1244-312N COVER 1244-3SD
OR MONARCH TOOL & INSTR. CO.
BOX MT-1010 R-312 COVER MT-CSD 1010
BOX TO BE SUPPLIED WITH NON-LOSABLE SCREWS
FINISH INSIDE P OUTSIDE P-AP
REMOVE FINISH 3/32 RADIALLY AROUND HOLES IN BOX

FINISH CO'	
Z	ANODIC TREAT
P	P-27 PRIME
AP	ALUMINIZED PA
C	CADMIUM PL

ASSY. DASH No.	MODEL	NEXT ASSY.	REQ.
-2	PBY-5	28E5743	1
-0	PBY-5A	21E5743	1

REQUIREMENTS PER AIRPLANE

REPLACES — CALC WT.

REPLACED BY — ACT. WT.

LIMIT DIMENSIONS UNLESS OTHERWISE SPECIFIED ± 1/2 — SCALE 12" = 1-0"

STAMP PART NUMBER WHERE SHOWN

-8, -7, -6 } C.A.C. BOX 43-312N

PART NO.	STOCK	MATERIAL	SPEC.	LH REQ. -0	RH REQ. -0	LH REQ. -2	RH REQ. -2	LH REQ. -3	RH REQ. -3	LH REQ. -4	RH REQ. -4	LH REQ. -5	RH REQ. -5
PARTS LIST PER ASSY.													

A.C.		10-1941	
NAVY NONE	NOTED	GALIZIA	
HEAT TREAT	FINISH	DRAFT	CHECK / STRUCT / MAT / APPROV

NAME BOX ASSY. - ELEC. STEW. WARNER HEATER DISTRIB

CONSOLIDATED AIRCRAFT CORP. SAN DIEGO, CALIF.

OPP. HAND NONE

SIZE D

28E5742

R

LET	ALTERATION	DATE	BY
A	ADDED ⅛ HOLE 2 PLACES	1-23-42	
B	CREATED -2 ASSY ADDED AN3058-8(1) & 28E5742-2 & #1422 FUSE HOLDER. NAF1034-4-15 (2) WAS (1) & NAF1034-4-35 (6) WAS (5). NO WT CHG. E.O. A 20646	4-7-42	EDWARDS
C	RELOCATED AN3015 SWITCH. NO WT CHG. E.O. A48622	8-7-42	MARTIN
D	RELOCATED ⅛ DRAIN HOLES (2) PLACES. NO WT CHG. E.O. A55287	8-7-42	MARTIN
E	CORRECTED LOCATION OF AN3015 SWITCH. ADDED SECT. A-A. (NO WT CHG.)	8-18-42	CHRIST
F	ADDED 28E5760 FOR -0 ASSY TO FACE OF DWG. & ADV. ADDED NOTE "IF B/P - - SHELLAC" (NO WT CHG.)	1-6-43	MARTIN

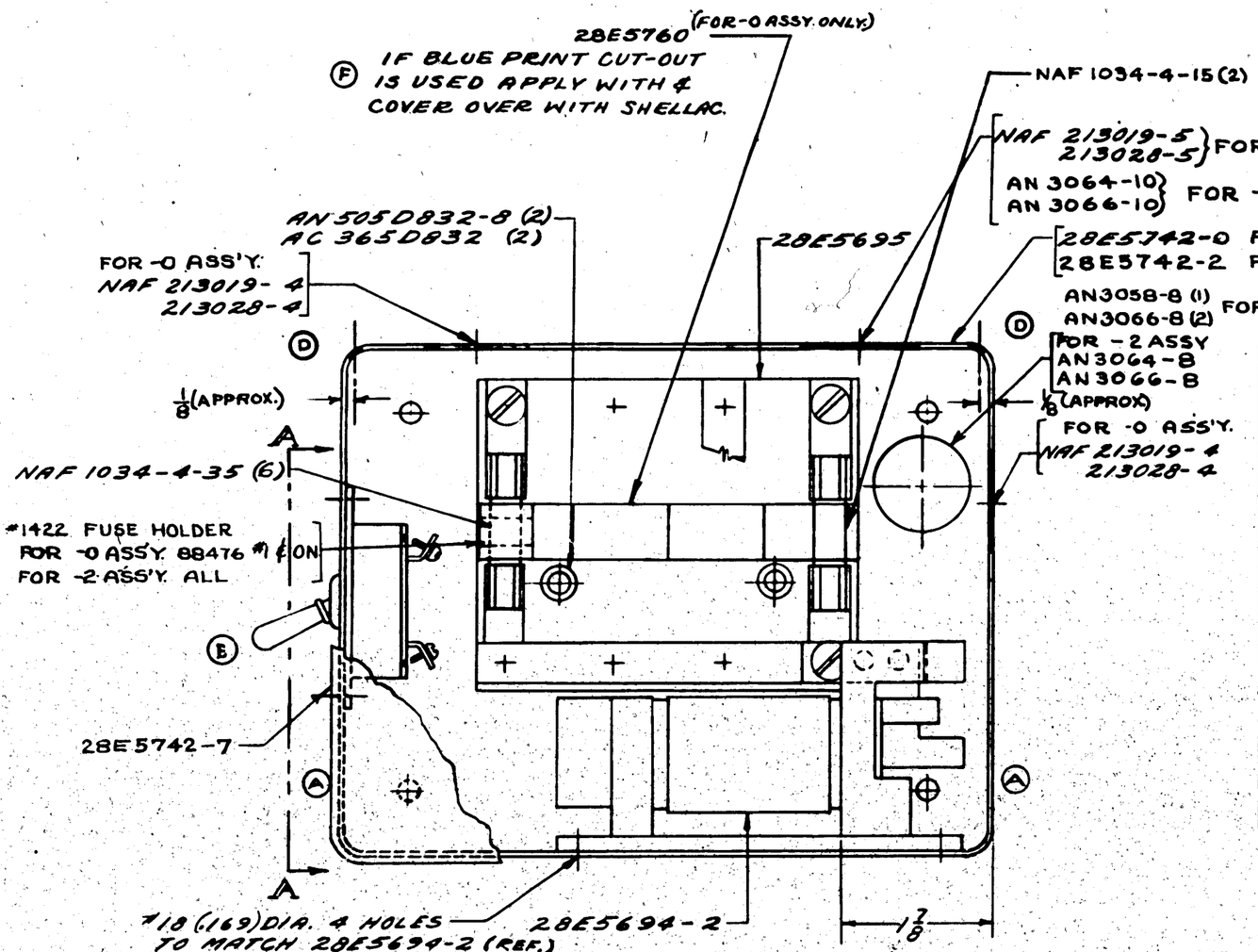

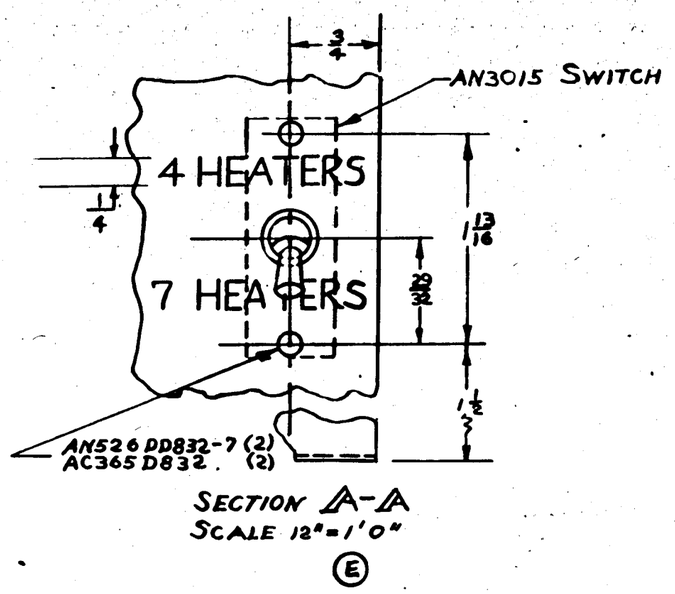

SECTION A-A
SCALE 12" = 1'0"
(E)

PART No.	STOCK	MATERIAL	SPEC.	LH REQ. -0	RH REQ. -2	LH REQ. -3	RH REQ. -4	LH REQ. -5	RH
28E5760				1					
	1422 SIZE 4A	FUSE HOLDER		4	4				
28E5742-2					1				
AN3058-8					1				
NAF 213028-5				1					
NAF 213028-4				2					
NAF 213019-5				1					
NAF 213019-4				2					
NAF 1034-4-35				6	6				
NAF 1034-4-15				2	2				
AN3064-10					1				
AN3015				1	1				
AN3064-8					1				
AN526DD832-7				2	2				
AN526DD832-6				4	4				
AN505D832-8				2	2				
AC365D832				8	8				
AN3066-8					3				
28E5695				1	1				
28E5694-2				1					
28E5742-0 (-7)				1					
AN3066-10				1	1				
-8									

PARTS LIST PER ASSY.

ASSY. DASH No.	MODEL	NEXT ASSY.	REQ.
-2	PBY-5	28E5740	1
-0	PBY-5A	28E5740	1

C-91876 1-30

S.O. 936-85

REQUIREMENTS PER AIRPLANE

REPLACES — CALC. WT.

REPLACED BY — ASY. WT.

UNLESS OTHERWISE SPECIFIED: ± ½ — SCALE 12" = 1'-0"

STAMP PART NUMBER WHERE SHOWN

AC — MATERIAL — SPEC.

NAVY NONE — NOTED ON DETAIL — FINISH

HEAT TREAT — DRAFT — CHECK — STRUCT — MAT — APPROV — ENG.

NAME BOX ASSY-ELEC: STEW. WARNER HEATER DISTR. BOX

OPP. HAND NONE

CONSOLIDATED AIRCRAFT CORP. SAN DIEGO, CALIF.

DWG. SIZE D — 28E5743

LET	ALTERATION	DATE	BY
A	ADDED -2 ASS'Y. NO WT. CHG.	4-6-42	[illegible]
B	[illegible]	"	"
C	REVISED REQ/PLANE BY NOTICE	7-1-42	MOSS

P.O. 27094
P.O. 44675

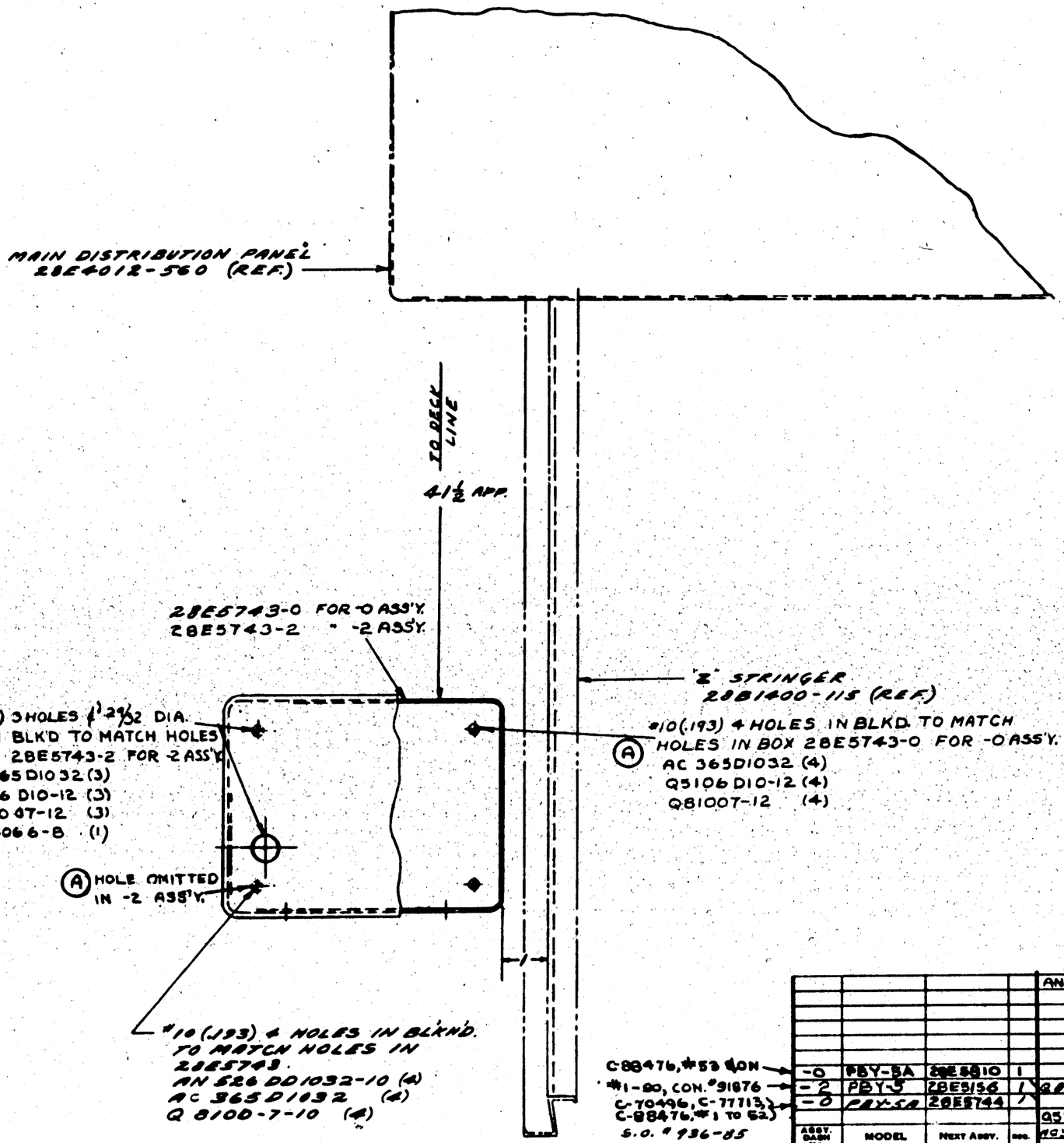

VIEW BLKHD. "4
STARBOARD SIDE
LOOKING AFT

C-88476, #53 SON
#1-90, CON. "91876
C-70496, C-77713,
C-88476, #1 TO 52)
S.O. #936-85

ASSY. DASH NO.	MODEL	NEXT ASSY.	REQ'D.
-0	PBY-5A	28E5810	1
-2	PBY-5	28E5156	1
-0	PBY-5A	28E5744	1

REQUIREMENTS PER AIRPLANE
REPLACES — CALC WT.
REPLACED BY — ACT. WT.
SCALE 6" = 1'-0"
STAMP PART NUMBER WHERE SHOWN

PART NO.	STOCK	MATERIAL	SPEC.	LH REQ. -0	RH REQ. -0	LH REQ. -2	RH REQ. -2	LH REQ. -3	RH REQ. -3	LH REQ. -4	RH REQ. -4	LH REQ. -5	RH REQ. -5
AN3066-8					1								
Q8100-7-10				4		3							
Q5106D10-12				4		3							
AC365D1032				4		3							
28E5743				1									
28E5743-2					1								

PARTS LIST PER ASSY.

AC
NAVY NONE — NONE
HEAT TREAT — FINISH

DRAFT	CHECK	STRUCT	MAT	APPROV	ENG.
10-23-41	10-28-41	[illegible]	JFR	[illegible]	[illegible]
SAL 12 MO	[illegible]	[illegible]	-	11-4-41	[illegible]

NAME INSTALL. -ELEC.-STEW. WARN. MTG. DISTRIB. BOX
OPP. HAND
CONSOLIDATED AIRCRAFT CORP. SAN DIEGO, CALIF.
SIZE D
28E5748

R

RBH RELEASE 10-27-41

LET	ALTERATION	DATE	BY
A	ADDED 8 PER 8 PER DWG. NO. 28E5010 & LOCATING PINS. NO WT. CHG.	7-16-41	CHECKED
B	CHANGED HOLES IN REAR VIEW TO OPPSITE SIDE. REMOVED NOTE "SHIPS 1-6 RNGL." NO WT. CHG.	9-16-41	CHECKED
C	ADDED 3 #28 (.140) HOLES TO VIEW A.A. ALSO NOTE "JIG DRILL ..... BRACKET." NET. WT. CHG.	11-13-41	CHECKED

E.O. A-2-5-4

E.O. A-2-9-4-5-B

E.O. A-2-10-6-2

A

A

1

B

$1\frac{5}{8}$

B

$\frac{17}{32}$ DIA. HOLE

28E5010-2 ASS'Y

$2\frac{9}{16}$ (REF)

A

$2\frac{1}{32}$ (REF)

$2\frac{17}{32}$ (REF)

A

$4\frac{9}{32}$ (REF)

SIDE VIEW

REAR VIEW

C

3 HOLES #28 (.140) JIG DRILL TO MATCH ELECTRONICS LABORATORIES TYPE X220 LAMP BRACKET.

$1\frac{7}{8}$

#28 (.140) (4 HOLES) JIG DRILL TO MATCH ELECTRONICS LABORATORIES TYPE X205 LAMP BRACKET.

$1\frac{5}{8}$ (REF)

$30° \pm 1°$

$\frac{11}{16}$

$\frac{11}{16}$

C

$\frac{5}{32}$

VIEW AA

C-91876

CONTRACT NO. 88476

ASSY. DASH NO.	MODEL	NEXT ASSY.	QUAN.
	PBY-5	28E5011	1
-0	PBY-5A	28E5011	1

REQUIREMENTS PER AIRPLANE

REPLACES — CALC. WT.

REPLACED BY — ACT. WT.

LIMIT ON DIMENSIONS UNLESS OTHERWISE SPECIFIED ± 1/32

SCALE 12" = 1' 0"

STAMP PART NUMBER WHERE SHOWN

PART NO.	STOCK	MATERIAL	SPEC.	LH REQ. -0	RH REQ. -0	LH REQ. -2	RH REQ. -2	LH REQ. -3	RH REQ. -3	LH REQ. -4	RH REQ. -4	LH REQ. -5	RH REQ. -5
28E5010-2 ASS'Y	BOX & COVER												
-0													

PARTS LIST PER ASSY.

AC			11-13-41	
NAVY NONE	NONE		11-27-41	12-4-41
HEAT TREAT	FINISH	DRAFT	CHECK	STRUCT	MAT	APPROV	ENGR.

NAME BOX ASS'Y - ELEC - FLUORESCENT LIGHT BOMBER'S SWITCH PANEL

CONSOLIDATED AIRCRAFT CORP. SAN DIEGO, CALIF.

OPP. HAND NONE

DWG. SIZE D

28E5754

R

LET	ALTERATION	DATE	BY
A	RELOCATED 1 1/32 DIA. HOLE. REMOVED DIMS 1, 3 7/8. RE-LOCATED 17/32 DIA 5 HOLES Ø ADDED DIMS. 31/32, 1 3/16, 11/16, 25/32, 1 9/32, 1 1/16. NO WT. CHG.	10-18-44	CRITZ

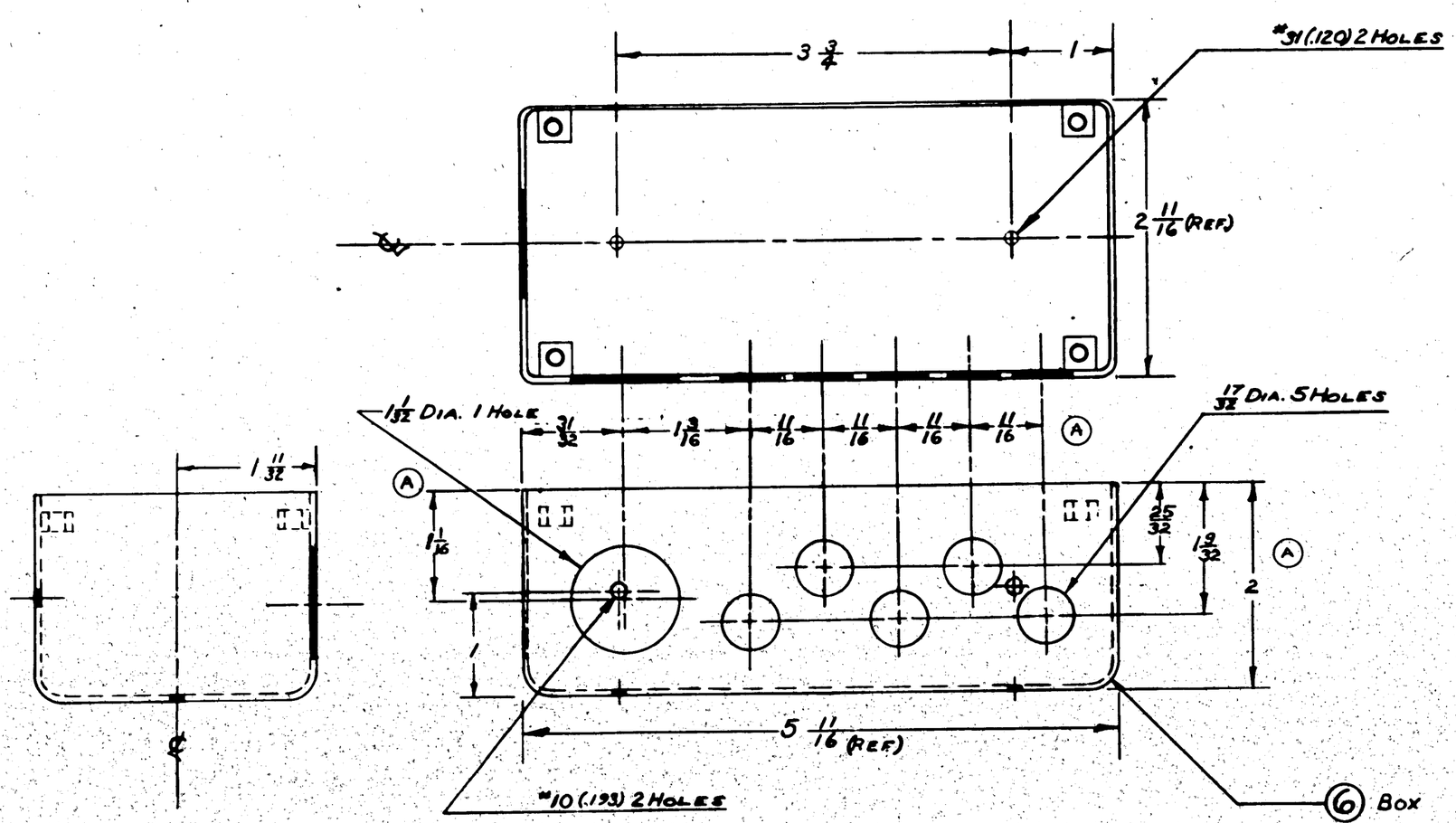

FINISH CODE	
Z	ANODIC TREATMENT
P	P-27 PRIMER
AP	ALUMINIZED PRIMER
C	CADMIUM PLATE

NOTE:
1. COVER USED BUT NOT SHOWN.
2. BOX MAY BE PURCHASED FROM POULSEN & NARDON OR MONARCH TOOL CO.
   P&N BOX #1225-200N
   COVER #1225-9SD
   MT BOX #1028R-200
   COVER #CSD1028

88476 TO 1A
91876

ASSY. DASH No.	MODEL	NEXT ASSY.	REQ.
0	PBY-5A	28E5755	1
	PBY-5	28E5739	1

REQUIREMENTS PER AIRPLANE

REPLACES — CALC. WT.

REPLACED BY — ACT. WT.

UNLESS OTHERWISE SPECIFIED DIMENSIONS DESCRIPTION ± 1/32 — SCALE 12"=1'0"

STAMP PART NUMBER WHERE SHOWN

PART No.	STOCK	MATERIAL	SPEC.	LH REQ.	RH REQ.	LH REQ.	RH REQ.	LH REQ.	RH REQ.	LH REQ.	RH REQ.	LH REQ.	RH REQ.
PARTS LIST PER ASSY.				-0		-2		-3		-4		-5	
Cover -7	CAC Box #40			1									
Box -6				1									

AC
NAVY NONE
HEAT TREAT
FINISH: P INSIDE PAP OUTSIDE

DRAFT	CHECK	STRUCT	MAT.	ASSOV	ENG.
11-13-44 E.J. MOORE	11-17-44	11-18-44		11-5-44	

NAME BOX -ELEC- FLUORESCENT LIGHT JUNCTION
CONSOLIDATED AIRCRAFT CORP. SAN DIEGO, CALIF.

OPP. HAND NONE

SIZE D — 28E5755

R

E.O. A3478

LET	ALTERATION	DATE	BY
A	ADDED 28E5780-6 (1) NO WT. CHG	4-22-41	
B	CHG NOTE 1 APPLY 28E5780 TO INSIDE OF COVER 28E5755-7 .... WAS "APPLY 28E5780-6 TO INSIDE OF COVER 28E5755-7 & COVER WITH SHELLAC" N/A ☆ PRESENT FOR PBY-5 NHS R.A.E. 6/6/41 (NO FREE RELEASES)		
C	RELOCATED FITTINGS. NAF-1149-10 WAS AN 3064-10. WT. CHG NEG (10-19-41 SCARTER)		

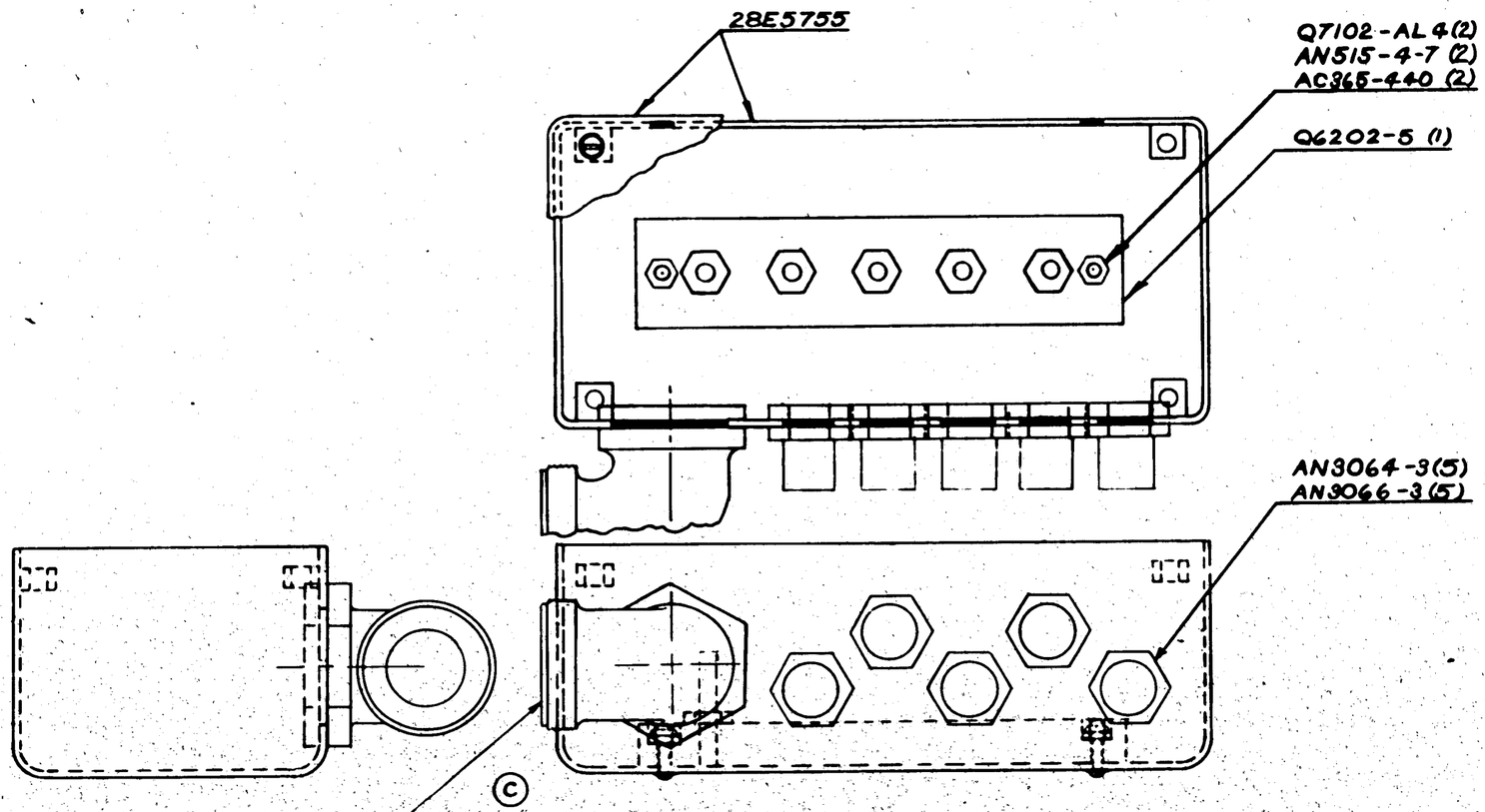

NOTE-
(A) APPLY 28E5780 TO INSIDE OF COVER 28E5755-7.
(B) IF B/P CUT-OUT IS USED APPLY 4 COVER OVER WITH SHELLAC.

CONTRACT # 91876-
CONTRACT # 88476
SHIPS # 1 TO M.C.R. 1-A

ASSY. DASH NO.	MODEL	NEXT ASSY.	REQ'D
	PBY-5	28E5772	1
-0	PBY-5A	28E5761	1

REQUIREMENTS PER AIRPLANE

REPLACED — CALC. WT.

REPLACED BY — ACT. WT.

LIGHT OR DIMENSIONS UNLESS OTHERWISE SPECIFIED: ± 1/32 — SCALE 12"=1'0"

STAMP PART NUMBER WHERE SHOWN

PART NO.	STOCK	MATERIAL	SPEC.	LH REQ. -0	RH REQ. -2	LH REQ. -3	RH REQ. -4	LH REQ. -5	RH REQ.
28E5780-6									1
AN3066-10									1
NAF1149-10									1
AN3066-3									6
AN3064-3									5
AC365-440									2
AN515-4-7									2
Q6202-5									1
Q7102-AL4									2
28E5755-6	BOX & COVER								1

PARTS LIST PER ASSY.

AC — NAVY NONE — HEAT TREAT NONE — FINISH

	DRAFT	CHECK	STRUCT	MAT	APPROV	ENG.
	11-21-41	[illegible]	PWB	[illegible]	[illegible]	[illegible]
E.J. Moore	9-27-41			12-1-41		

NAME BOX ASS'Y-ELEC- INVERTER JUNCTION

OPP. HAND NONE

CONSOLIDATED AIRCRAFT CORP. SAN DIEGO, CALIF.

SIZE D — 28E5759

R

LET	ALTERATION	DATE	BY
	E.O. A19464		
A	CREATED -2 ASSY. NOS WT. CHG	6-2-43	E. AME
B	CREATED -8 ASSY. NOS WT. CHG	7-1-43	DAVIDSON
C	IN ☐ AN3064-6 WAS AN3066-8 AN3064-6 WAS AN3064-8 NO WT. CHG.		DAVIDSON
	E.O. A95218		
D	AC365-440 WAS AC372-440(2 EA)	9-24-43	CLARK
E	FOR -8 ASSY. BOX -9 WAS -6		
	-6 WAS FOR -0 & -8 ASSY.		
	SD 84145 MCR 164-4		
	25/32 DIA. HOLE WAS FOR -0 &		
	-2 ASSY. WT. CHG. NEG.	9-24-43	CLARK
F	FOR -8 ASSY: NAF213019-5(1) WAS (2); NAF213028-5(1) WAS (2); AN315-4-6 (6) WAS (2); AC365-440(6) WAS (2); & ADDED AN3100-145-55 (1), Q7102AL4(8) DIM'S 1 9/16, 1 & 1 3/4 (2 PLACES), 29/32 D. HOLE (-9 ONLY) & .120 DIA. HOLE, 4 PLACES (-9 ONLY)" (WT. CHG. NEG.)	5-5-43	DAVIDSON
G	FOR -8 ASSY. AN515-4-6 (4) WAS (6), AC365-440 (4) WAS (6) & REMOVED Q82027-4(1) DIM'S 1 1/4, 1 3/16, 1 5/8 & 7/16 ⌀ = 31 (.120) DIA. 2 HOLES." (WT CHG NEG)	6-5-43	DAVIDSON
H	29/32 D. HOLE WAS 27/32 D. HOLE. WT. CHG. NEG.	6-30-43	DAVIDSON

E.O. A19464
E.O. A95218
SD 84145
MCR 164-4
E.DC. 2026

AN3100-145-55(1)
Q7102 AL 4 (8)
AN515-4-6 (4)
AC365-440 (4)
(-8 ASSY.)

NAF213019-5(1)
NAF213028-5(1)
(-0 & -2 ASSY)

AN3064-6(1)
AN3066-6(1)
-0 & -2 ASSY ONLY.

29/32 D. HOLE (-9 ONLY)

25/32 D. HOLE (-6 & -7 ONLY)

.120 DIA. HOLE 4 PLACES (-9 ONLY)

1 1/16 · 1 9/16 · 2 1/2 · 3 5/8 · 4 1/8 REF. · 2 1/16 · 1/2 · 3/4 · 5 1/4 · 5 1/16 · 3 1/4 REF. · 6 3/4 REF

-9 ON -8 ASSY.

6 (ON -0 ASSY ONLY) · -7 (-2 ASSY)

Q3106-D832 (4)

AN 442-AD3 RIVETS

1 3/16 DIA. HOLE (-6 & -9 ONLY)

NAF213019-5 (1)
NAF213028-5 (1)
-0 & -8 ASS'Y ONLY

1 3/8 · 2 1/16

FINISH CODE	
Z	ANODIC TREATMENT
P	P-27 PRIMER
AP	ALUMINIZED PRIMER
C	CADMIUM PLATE

BOX MAY BE PURCHASED FROM
PAULSEN & NARDON OR
MONARCH TOOL CO.
P&N 1256-308
MT 1111-308

CONT. # NXS 13595
CONT. # 91876 4-89
CONT. # 88476 ONLY

ASSY. DASH NO.	MODEL	NEXT ASSY.	QUAN.
-8	PBY-5A	28F6224	1
-2	PBY-5	28F6224	1
-0	PBY-5A	28F6222	1

REQUIREMENTS PER AIRPLANE

REPLACES — GALC WT.
REPLACED BY — ASY. WT.

UNLESS OTHERWISE SPECIFIED + 1/32 · SCALE 12" = 1'0"

STAMP PART NUMBER WHERE SHOWN

PART NO.	STOCK	MATERIAL	SPEC.	LH REQ. -0	RH REQ. -0	LH REQ. -2	RH REQ. -2	LH REQ. -8	RH REQ. -8	LH REQ. -4	RH REQ. -4	LH REQ. -5	RH REQ. -5
Q7102AL4								8					
AN3100-145-55								1					
-9	CAC. BOX 46-308												
AC365-440								4					
AN515-4-6								4					
-8	NAF213019-5			2		1		1					
-2	NAF213028-5			2		1		1					
-0	AN3064-6			1		1							
	AN3066-6			1		1							
	Q3106-D832			4		4		4					
	AN442-AD3							11					
-7	CAC BOX 46-308			1									
-4	CAC BOX 46-308									1			

PARTS LIST PER ASSY.

AC
NAVY NONE
HEAT TREAT

P INSIDE
P&P OUTSIDE
FINISH

DRAFT	CHECK	STRUCT	MAT	APPROV	ENG
1-2-43					
1-5-43				1-9-43	

NAME BOX - ELEC - A.F.C. & LANDING GEAR WARNING LIGHTS

OPP. HAND NONE

CONSOLIDATED AIRCRAFT CORP. SAN DIEGO, CALIF.

DWG. D SIZE 28E5765

28E5765

R

LET	ALTERATION	DATE	BY
A	ADDED BOA REFERENCE NO'S	4-24-42	[illegible]

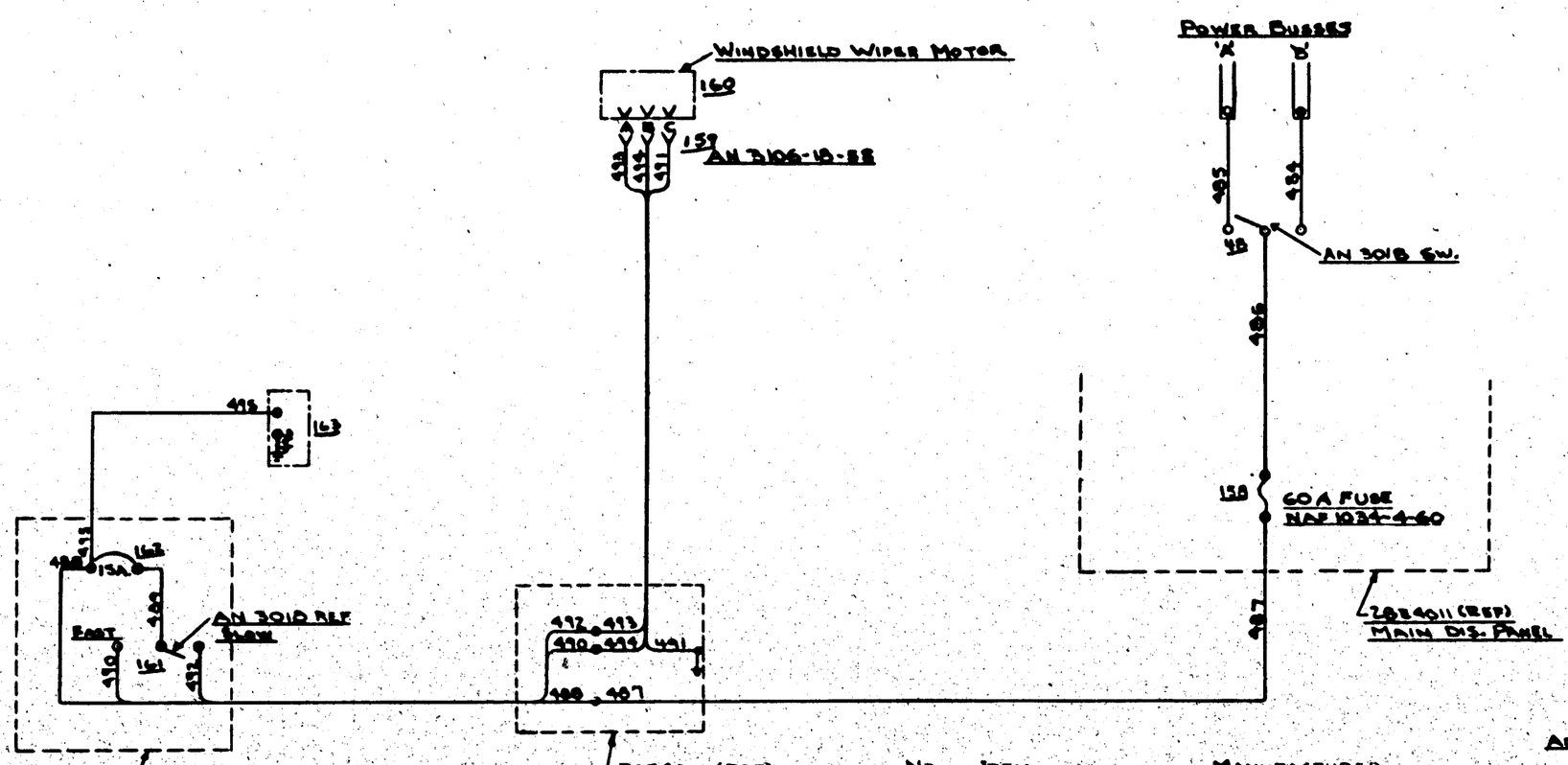

WIRE NO	GAUGE NO	LENGTH
484	14	4"
485	14	4"
486	14	3'-0"
487	14	14'-6"
488	14	20'-0"
489	14	4"
490	14	20'-0"
491	14	6'-6"
492	16	20'-0"
493	16	6'-6"
494	14	6'-6"
495	20	9'-0"
496	20	8"

ADDITIONAL EQUIPMENT

NO	ITEM	MANUFACTURER	TYPE	DRAWING	REQ'D
158	FUSE 60A	LITTEL FUSE CORP. CHICAGO ILL.	4AG	NAF 1034-4-60	1
48	SWITCH	CUTLER HAMMER INC. MILWAUKEE WIS.		AN-3018	1
		FOLLOWING FURNISHED BY AERO-TORQUE CO. WITH CAC # WIPS			
159	PLUG	CANNON ELEC. DEVICE CO. L.A. CALIF.	PA	AN 3106-18-8S	1
160	MOTOR	AERO-TORQUE CO. CLEVELAND, OHIO		D.D.364	1
161	SWITCH	CUTLER HAMMER INC. MILWAUKEE, WIS.	# MARKS	AN-3018	1
163	BREAKER	SPENCER THERMO. CO. ATTLEBORO, MASS.	KLIXON	C-1863-2-15	1
163	AUTOMATIC PUMP	AERO-TORQUE CO. CLEVELAND, OHIO		D11695	1

CONTRACT # 38426
SHIPS 168 TO 300
CONTRACT # 37713
SHIPS 1 TO 3

RUSH RELEASED 1-15-42

ASSY. DASH NO.	PBY-5A	28E3656	1
	MODEL	NEXT ASSY.	REQ.

REQUIREMENTS PER AIRPLANE

REPLACES — CALC. WT.

REPLACED BY — ACT. WT.

SCALE NONE — NONE

STAMP PART NUMBER WHERE SHOWN

WIRE AS NOTED — AN-W-98

PART NO	STOCK	MATERIAL	SPEC.	LH REQ.	RH REQ.	LH REQ.	RH REQ.	LH REQ.	RH REQ.	LH REQ.	RH REQ.
PARTS LIST PER ASSY.				-0	-2	-3		-4		-5	

AC — 1-8-42 DRAFTING

NAVY NONE — NONE — CHECK — STRUCT — MAT — APPROV — ENG.

HEAT TREAT — FINISH

NAME WIRING DIAGRAM WINDSHIELD WIPER

CONSOLIDATED AIRCRAFT CORP. SAN DIEGO, CALIF.

OPP. HAND NONE

SIZE D — 28E5772

R

LET	ALTERATION	DATE	BY
	NIL		

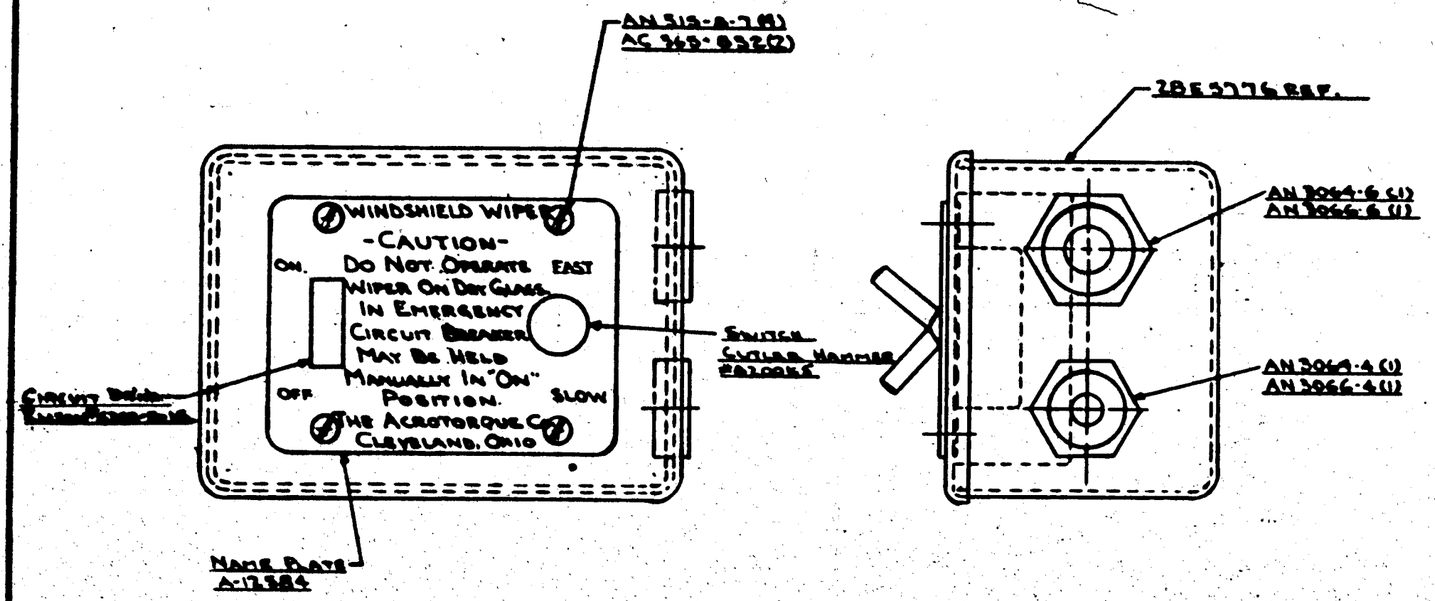

CONTRACT 70996 SHIPS 168-200
CONTRACT 77713 SHIPS 1-3

				C-6863-3-16	1
				#81888-5	1
				#13584	1
	PBY-5A	28P6261	1	AC365-832	2
ASSY. GROUP NO.	MODEL	NEXT ASSY.	QUAN.	AN515-8-7	4
REQUIREMENTS PER AIRPLANE				AN 3064-4	1
REPLACES			CALC. WT.	AN 3064-6	1
REPLACED BY			ASY. WT.	AN 3066-4	1
	SCALE 12" = 1'-0"			AN 3066-6	1
STAMP PART NUMBER WHERE SHOWN				28E5776	1
				PART No.	STOCK

Furnished with CAC #WIP-5

MATERIAL	SPEC.	LH REQ. -0	RH REQ. -2	LH REQ. -3	RH REQ. -4	LH REQ. -5	RH REQ.
PARTS LIST PER ASSY.							

AC		PETRAK					
NAVY Navic	NOTED ON DETAIL	1-15-42					
HEAT TREAT	FINISH	DRAFT	DESIGN	STRUCT	MAT	APPROV	ENG.

NAME Box Assembly Electric Windshield Wiper Control

OPP. HAND None

CONSOLIDATED AIRCRAFT CORP. San Diego, Calif.

SIZE D

28E5774

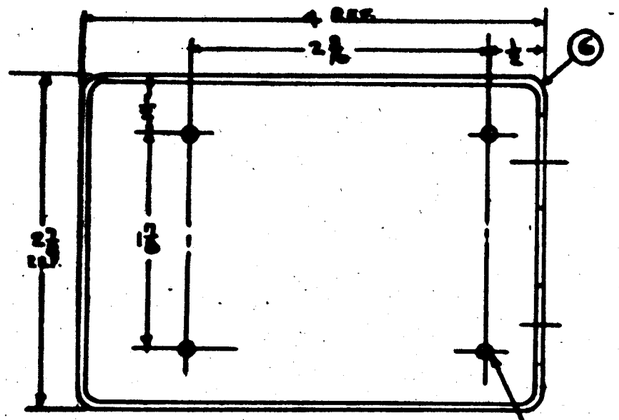

FRONT VIEW
COVER REMOVED

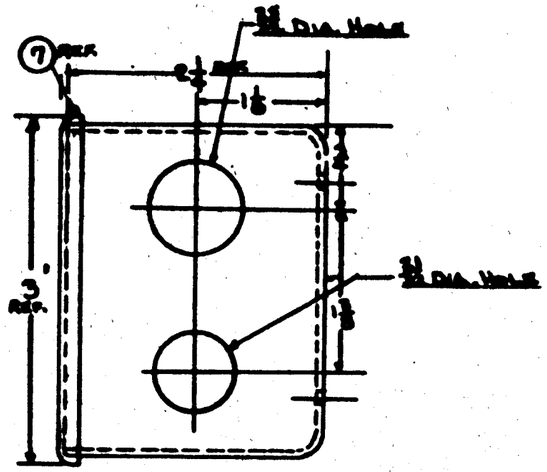

SIDE VIEW

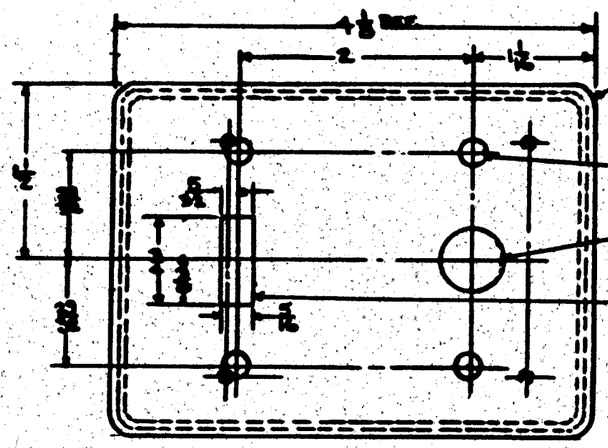

FRONT VIEW
WITH COVER

(7) FOR (2) 4 HOLES IN BOTT. OF BOX FOR HOLE BOX

(6) (4) 4 HOLES IN COVER

1/4 DIA HOLE IN COVER

CUTOUT IN COVER

NOTES:
(1) BOX & COVER MAY BE PURCHASED FROM
MONARCH TOOL & INSTR. CO. SPECIFYING
1005R-288 BOX
MT-CSD 1005 COVER
OR FROM PHILBEN & NARDAN CO. SPECIFYING
1128-208N BOX
P/N 1128-36D COVER
(2) BOX TO BE FURNISHED WITH TIGHT FITTING COVER, NON-LOSABLE SCREWS & DURAL WASHERS
(3) REMOVE FINISH 1/8 RADIALLY AROUND CONDUIT HOLES
(4) FINISH: P-INSIDE, P-PRIM OUTSIDE
P: P27 PRIMER
GP: GREEN PRIMER

CONTRACT 19496 SHEETS 1&2
CONTRACT 19913 SHEET 1-3

| | | |

LTR	REVISIONS	DATE	APP'D

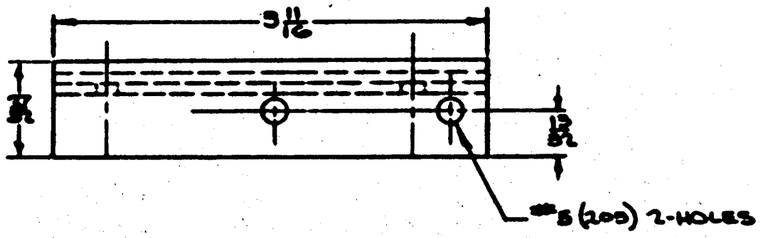

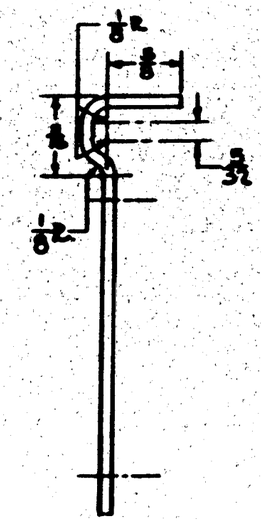

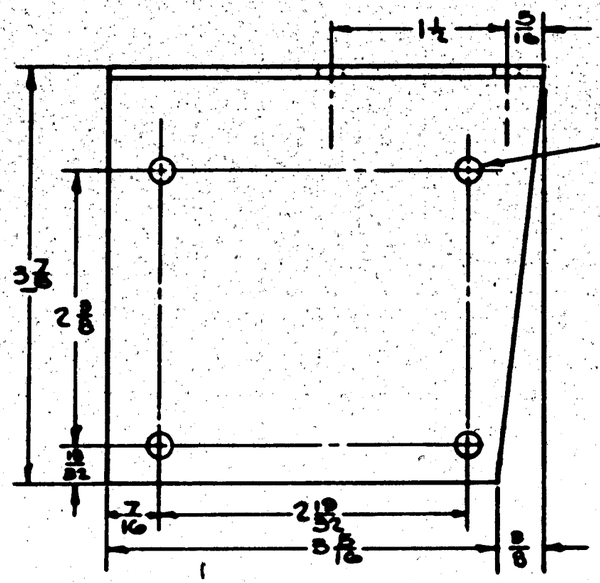

FINISH CODE	
Z	ANODIC TREATMENT
P	P-27 PRIMER
AP	ALUMINIZED PRIMER
C	CADMIUM PLATE

GP-GREEN PRIME

-0	28 BASIC	28P6616															
-0	28 SPRINT	28P6616															
-0	PBY-5A	28P6616															
ASSY. DASH NO.	MODEL	NEXT ASSY.	QUAN.														

REQUIREMENTS PER AIRPLANE

RELEASED	.101 Dash No.																
RELEASED BY	ASST. SUP.																
.010	SCALE 12" = 1'-0"																
PART NO.	STOCK	MATERIAL	SPEC.	LH REQ.	RH REQ.	LH REQ.	RH REQ.	LH REQ.	RH REQ.	LH REQ.	RH REQ.	LH REQ.	RH REQ.				
PARTS LIST PER ASSY.				-0		-2		-3		-4		-5					

A C		5/16/42	E.J.M	S.E.R.M.	DOUGLAS		CHECK
NAVY 6 (SRSB)	Z-P-GP	LAND					WELD
HEAT TREAT	FINISH	DRAFT	CHECK	STRUCT	MAT	APPROV	ENG.

NAME BRACKET - ELEC. DOOR WL. DOOR LOCK MICRO SWITCH.

OPP. HAND

CONSOLIDATED AIRCRAFT CORP. San Diego, Calif.

SIZE D

28E5779

R 5/20

LET	ALTERATION	DATE	BY
A	ADDED MAT'L NOTE #1 & 2 TO FACE. REMOVED 'PRINTED MATERIAL' FROM FINISH, "BLUEPRINT" FROM STOCK, AND NOTED STOCK & MAT'L IN B/M. ADDED DIMS: 4 3/4 & 9 3/4 "APPLY TO INSIDE OF MOTOR SWITCH ——" WAS "CUT OUT AND CEMENT TO INSIDE OF MOTOR SWITCH WT. CHG. NEG.	1-12-43	

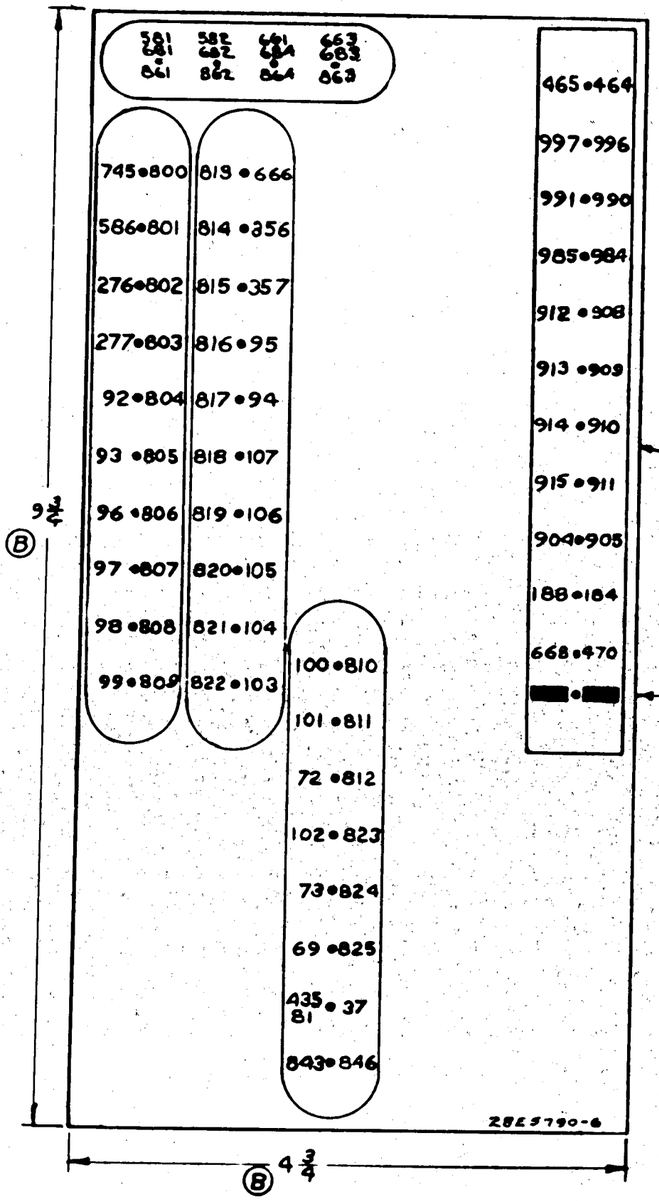

(6) APPLY TO INSIDE OF MOTOR SWITCH BOX COVER 28E1166-22 (REF.)

PART MAY BE
1- BLUE PRINT CUT-OUT.
2- DECALCOMANIA, BLACK LINES ON WHITE, A.A.F. SPEC. 1411B, WATER SLIP-OFF TYPE. (MAY BE PURCHASED FROM DUROCHROME CO., LOS ANGELES, CALIF. TYPE K. OR EQUIV.) PART NUMBER TO BE PRINTED ON REVERSE SIDE OF PAPER BACKING. ALL LETTERS TO BE 1/8" HIGH.
BLANKS TO BE WHITE ON DECALCOMANIA

CONT. 9/876 SHIPS 1-30

DASH NO.	MODEL	NEXT ASSY.	QUAN.
-6	PBY-5	28E1166	1

REQUIREMENTS PER AIRPLANE

REPLACES — CALC. WT.

REPLACED BY — ACT. WT.

LIGHT ON SHOULDERED WHEN USED BY HOUSING SPECIFIED (+ / −) — SCALE

STAMP PART NUMBER WHERE SHOWN

PART NO	STOCK	MATERIAL	SPEC.	LH REQ.	RH REQ.	LH REQ.	RH REQ.	LH REQ.	RH REQ.	LH REQ.	RH REQ.	LH REQ.	RH REQ.
PARTS LIST PER ASSY.				-0		-2		-3		-4		-5	
-6	NOTED	NOTED											

AC		3-26-42			Calbert	Jos. Zucchi	
NAVY						1-23-43	C. W. D.
HEAT TREAT	FINISH	DRAFT	CHECK	STRUCT.	STAT	APPROV.	ENG.

NAME IDENTIFICATION-ELEC-MOTOR SWITCH BOX TERMINAL
CONSOLIDATED AIRCRAFT CORP. SAN DIEGO, CALIF.

OPP. HAND

DWG. SIZE D — 28E5790

R 28E5790

LET	ALTERATIONS		
A			
A			
C			

E.O.N. 598 91

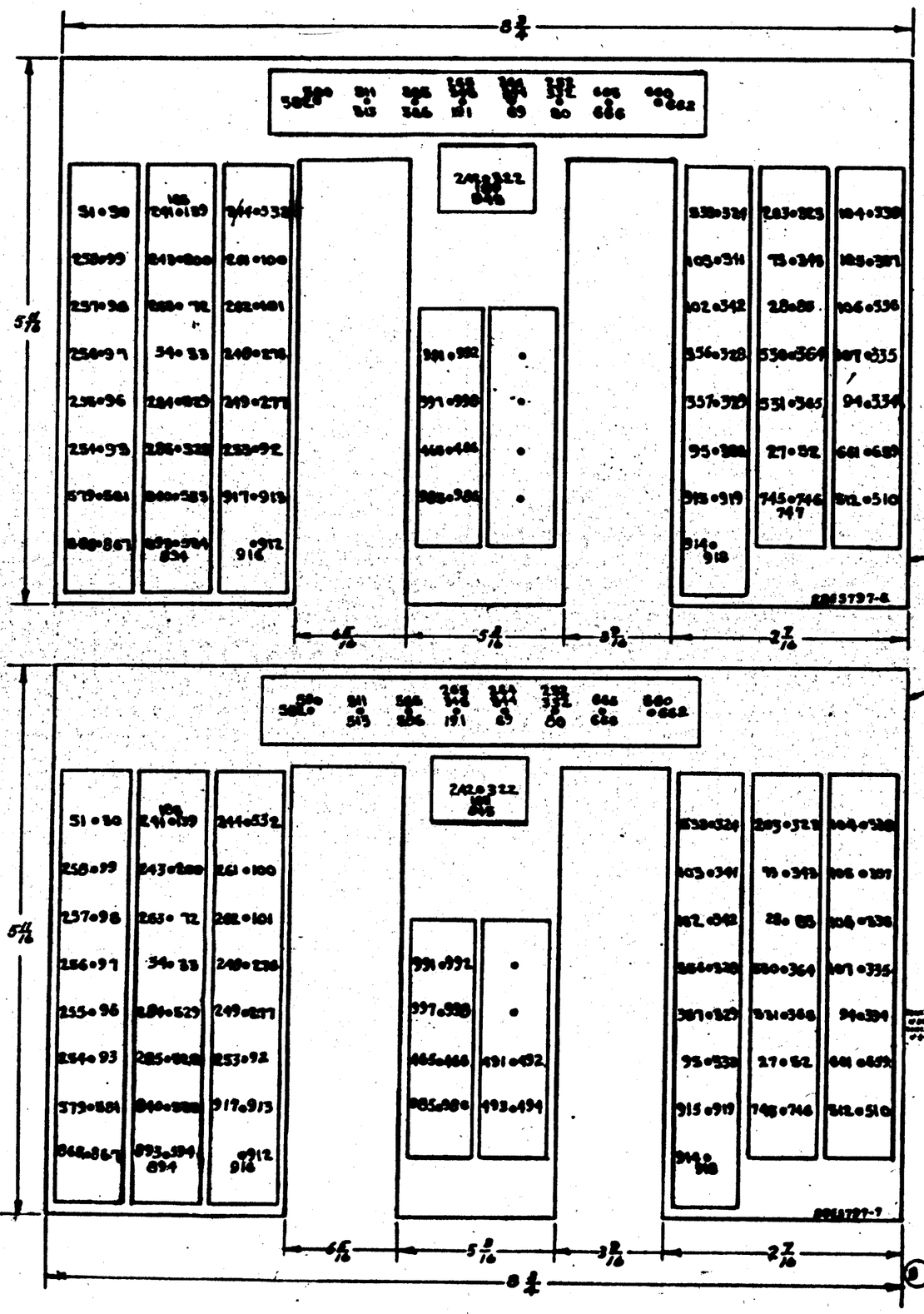

NOTE

APPLY TO INSIDE OF CENTER
WING JUNCTION BOX COVER 28E1004-6(REF.)

NOTES:

(A) 1- DECALOMANIA - BLACK LINES ON WHITE BACKGROUND. "DUROCHROME TYPE K" OR EQUIV. MAY BE PURCHASED FROM THE DUROCHROME CO. INC., LOS ANGELES, CALIF. PART NUMBER TO BE PRINTED ON REVERSE SIDE OF PAPER BACKING.

2- ALTERNATE PART MAY BE MADE BY CUTTING BLUEPRINT OF DWG. & APPLY WITH CEMENT.

(C) 3. DECALCOMANIA, AAF SPEC. 14118 WATER SLIP OFF TYPE. ALL LETTERING TO BE 1/8 INCH HIGH.

| | | |

WIRE NO	759	760	761	762	763	764		766	767	768	769	770	366	367	773	774	775	776	777	778		780	781	782	783	784
SIZE-A-NO	18	20	18	18	18	18		12	18	12	18	18	12	12	18	18	8	18	20	18		18	18	18	18	18
LENGTH (FT.)	2	17	1	8	2	18		22	10	10	4	1	1	1	4	27	8	7	10	10		3	4	4	4	4

LET	ALTERATION	DATE	BY

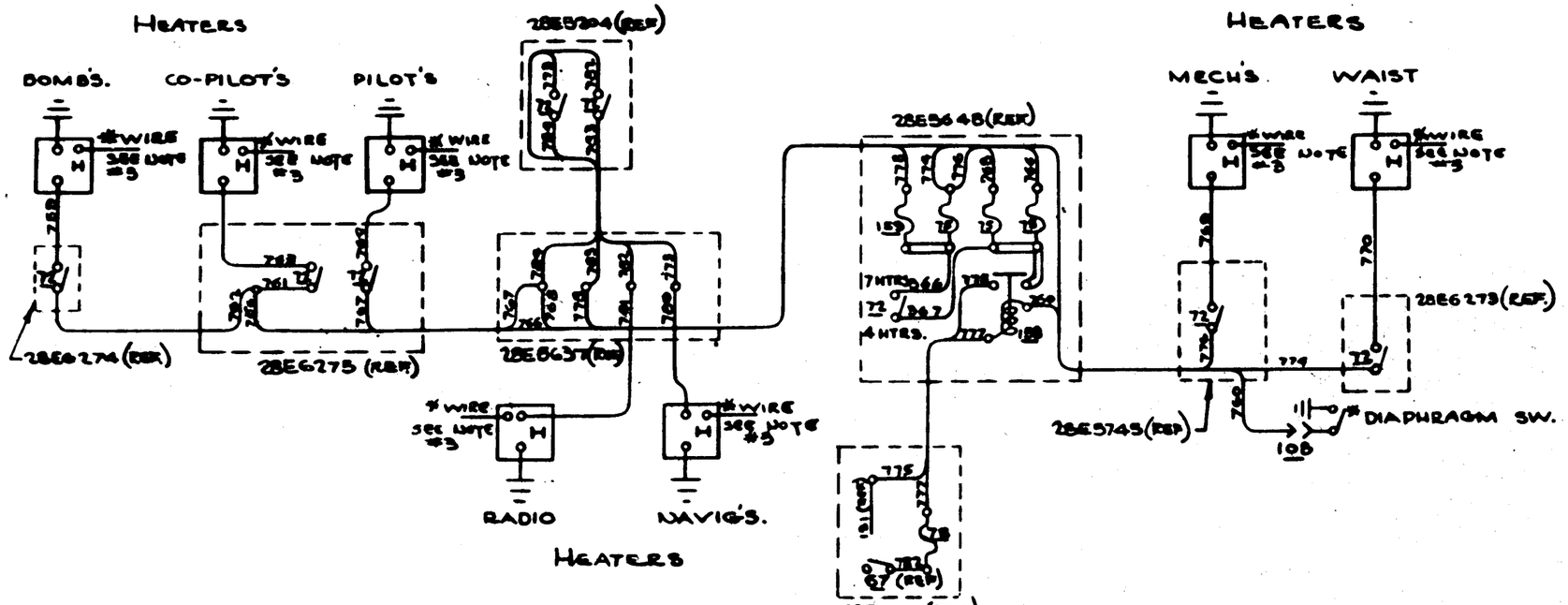

NO.	ITEM	MANUFACTURER	TYPE	DRWG. REF.	REQD
72	SWITCH	CUTLER-HAMMER INC.	B-8A	AN 3015	6
75	FUSE, 35 AMP.	LITTLE FUSE CORP.	4-AG	NAF 1034-4-35	3
78	FUSE, 5 AMP.	" " "	4-AG	NAF 1034-4-5	1
108	PLUG RECEPT.	CANNON ELEC. DEV. CO.	CANNON	AN 3106-12S-4S	1
158	RELAY	GENERAL ELEC. CO.	(MOD) GTR 70A2R		1
159	FUSE, 15 MP.	LITTLE FUSE CORP.	4-AG	NAF 1034-4-15	1

CONT. 88476 SHIPS #5801 ON

NOTE:
1. THIS IS NOT A CONSTRUCTION DRAWING THIS APPLIES ONLY TO THE WIRING OF THE STEWART-WARNER HEATING SYSTEM.
* FURNISHED WITH STEWART WARNER EQUIPMENT.
3. THIS WIRE CONNECTS TO SOLENOID 470941 (REF) IN VAPOR LINE.

-0	PBY-5A	28E5636	1
ASSY. BASH NO.	MODEL	NEXT ASSY.	REQ.

REQUIREMENTS PER AIRPLANE

REPLACES — CALC. WT.

REPLACED BY — ACT. WT.

SCALE

STAMP PART NUMBER WHERE SHOWN

— WIRE AS NOTED —

PART NO.	STOCK	MATERIAL	SPEC.	LH RH REQ. -0	LH RH REQ. -2	LH RH REQ. -3	LH RH REQ. -4	LH RH REQ. -5
-0								

PARTS LIST PER ASSY.

AC / NAVY		5/22/46					
HEAT TREAT	FINISH	DRAFT.	CHECK	STRUCT	MAT	APPROV	ENG.
		LANG		E.J.R.			

NAME WIRING DIAGRAM - ELEC. - STEW. ET WARNER HEATING SYSTEM.

OPP. HAND

CONSOLIDATED AIRCRAFT CORP. San Diego, Calif.

SIZE D — 28E5809

E.O.A 50718A

LET	ALTERATION	DATE	BY
A	(1) DIM. WAS 2 PLACES) (2) DIMS. WAS 2 ± .010 (2) DIMS. WAS ± .010 REM. (3) DIMS. (2 PLACES) (4) (2.59) (2.62) (4) ADDED (45° 2 PLACES) (5) DIA. 2 HOLES (6) DIM 3 PLACES) (7) (3.25) (8) (1/2) (9) (R 2 PLACES) WITCHING MEGA 9-12-42		
B	CORRECTED VIEWS TO AGREE WITH E.O.A 50718A NOWTCHG	8-27-42	CLARK

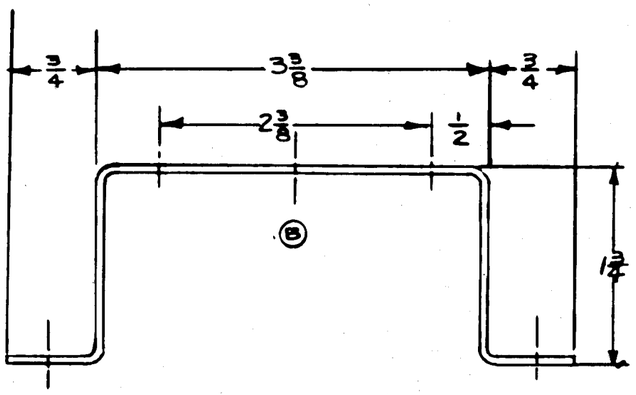

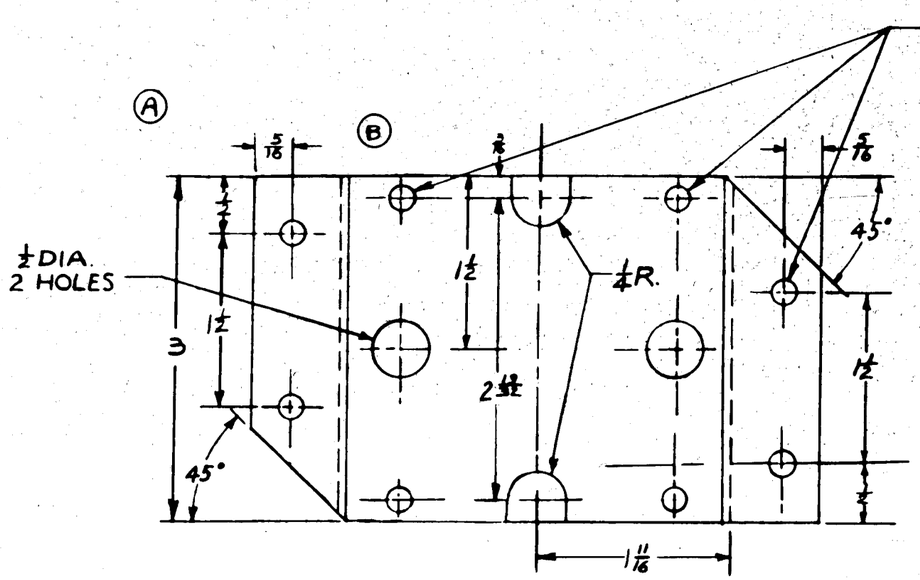

NOTE:
1. ALL BEND & RELIEF RADII 1/8

FINISH
Z-ANODIZE
P-P-27 PRIMER
GP-GREEN PRIME

ASSY. DASH NO.	MODEL	NEXT ASSY.	REQ.
	28-5A MN	28E5813	1
	28-5A MC	28E5813	1
	PBY-5A	28E5813	1

REQUIREMENTS PER AIRPLANE

REPLACES — CALC WT.

REPLACED BY — ACT. WT.

ALL DIMENSIONS UNLESS OTHERWISE SPECIFIED ± 1/2 — SCALE 12"=1'-0"

STAMP PART NUMBER WHERE SHOWN

PART NO.	STOCK	MATERIAL	SPEC.	LH REQ.	RH REQ.	LH REQ.	RH REQ.	LH REQ.	RH REQ.	LH REQ.	RH REQ.	LH REQ.	RH REQ.
	.051 X 3 3/8 X 8 3/8	ALCLAD	47A8-T	-0		-2		-3		-4		-5	

PARTS LIST PER ASSY.

AC		6/15/42	
NAVY NONE	Z-P-GP	LANG	
HEAT TREAT	FINISH	DRAFT	CHECK / STRUCT / MAT / APPROV / ENG.

NAME BRACKET-ELEC.-NOSE WHEEL SWITCH - DOWN

OPP. HAND

CONSOLIDATED AIRCRAFT CORP. SAN DIEGO, CALIF.

DWG. D SIZE — 28E5812

R

E.O. A50891A
E.O. A50814A

LET	ALTERATION	DATE	BY
A	CREATED -2 ASSY. NEG. WT. CHG	10-23-42	ROSS
B	CREATED -3 ASSY. NEG. WT. CHG	10-23-42	ROSS
C	ADDED DIM. 25/32 DIA. HOLE	6-14-43	DAD MUN

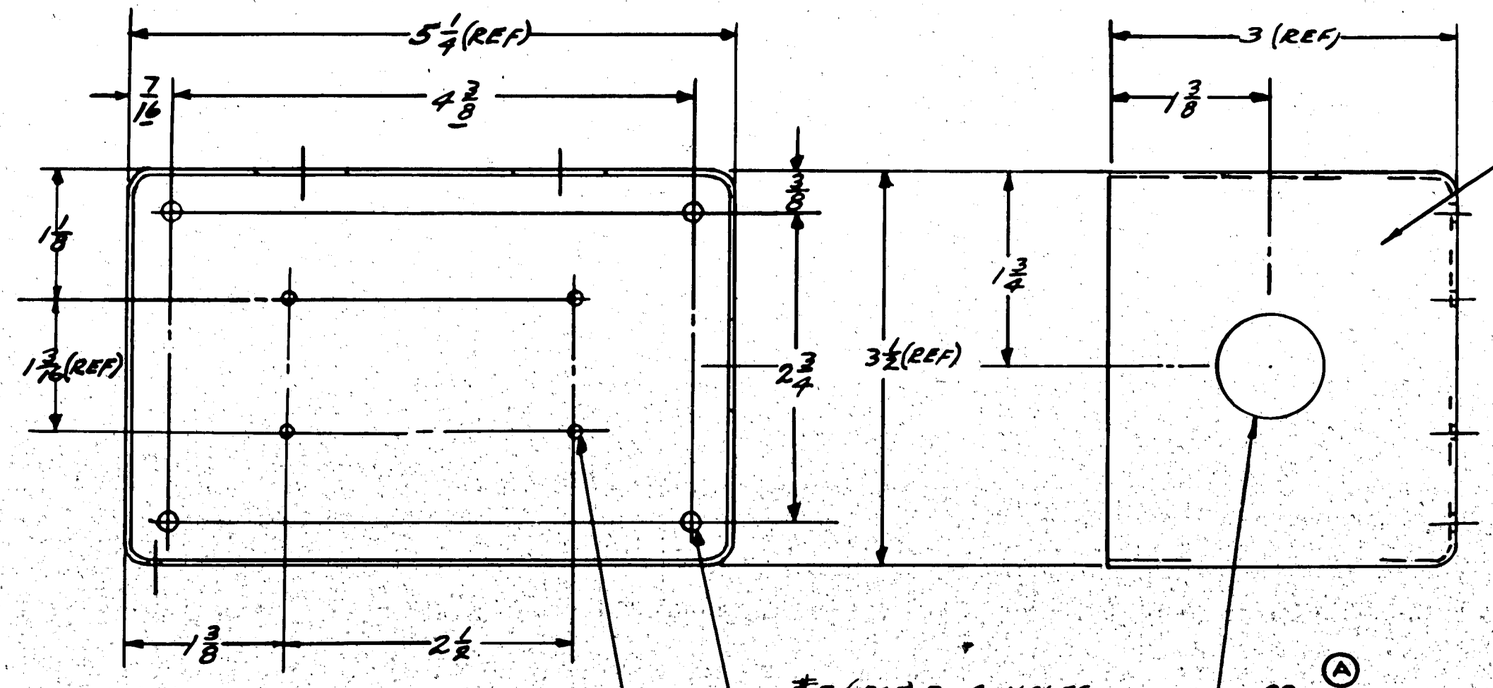

Ⓐ
-6 BOX (REF) -0 ASSY.
-8 BOX (REF) -2 ASSY.
-9 BOX (REF) -3 ASSY.
Ⓑ

VIEW SHOWN WITH COVER REMOVED

NOTCH OUT 1/4 D WITH RAT-TAIL FILE FOR DRAIN.

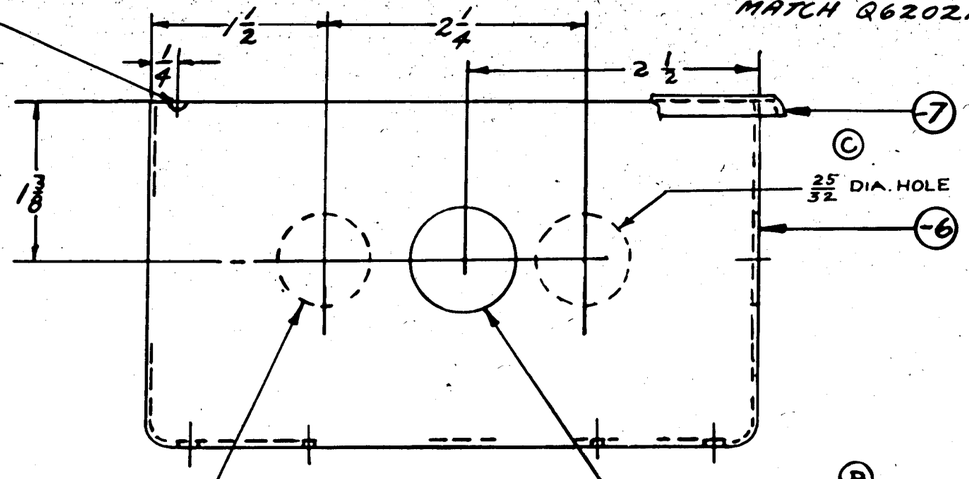

NOTES:
FINISH INSIDE P. FINISH OUTSIDE P-6P
REMOVE FINISH 3/32 RADIALLY AROUND HOLES
BOX MAY BE PURCHASED FROM POULSEN & NARDON 1205-300. TO BE FURNISHED WITH P&N COVER 1205-1 & TINNERMAN FASTNERS #5928.

ASSY. BASH No.	MODEL	NEXT ASSY.	QTY.
-3	PBY-5	28E5816	1
-3	PBY-5A	28E5816	1
-2	PBY-5	28E5816	1
-2	PBY-5A	28E5816	1
-5	PBY-5A	28E5816	1

C.91876
C.88476 #-52161-ON
C.91876
C.88476
C.88476 #53T060

REQUIREMENTS PER AIRPLANE
REPLACES — CALC. WT.
REPLACED BY — ACT. WT.
SCALE 12" = 1'-0"
STAMP PART NUMBER WHERE SHOWN

PART No.	STOCK	MATERIAL	SPEC.	-0 LH	-0 RH	-2 LH	-2 RH	-3 LH	-3 RH	-4 LH	-4 RH	-5 LH	-5 RH
PARTS LIST PER ASSY.				REQ.	REQ.	REQ.	REQ.	REQ.	REQ.	REQ.	REQ.	REQ.	REQ.
-9								1	1				
-8						1	1						
-7	C.I.B.C. # 38-300N			1	1	1	1						
-6				1	1								

AC
NAVY NONE — NOTED — FINISH
HEAT TREAT
7/28/42 DRAFT — 7/1/42 CHECK — STRUCT — MAT — APPROV — ENG.

NAME BOX-ELEC-REMOTE INDICATING COMPASS
CONSOLIDATED AIRCRAFT CORP. SAN DIEGO, CALIF.
OPP. HAND
DWG. SIZE D
28E5815

28E5815

E.O. A50812

E.O. A50815
E.O. A560464

REVISIONS									
LTR	DESCRIPTION							DATE	APPROVED
A	[illegible]							[illegible]	
B	[illegible]							[illegible]	
C	[illegible]							[illegible]	
D	[illegible]							[illegible]	
E	[illegible]							[illegible]	
F	[illegible]							[illegible]	

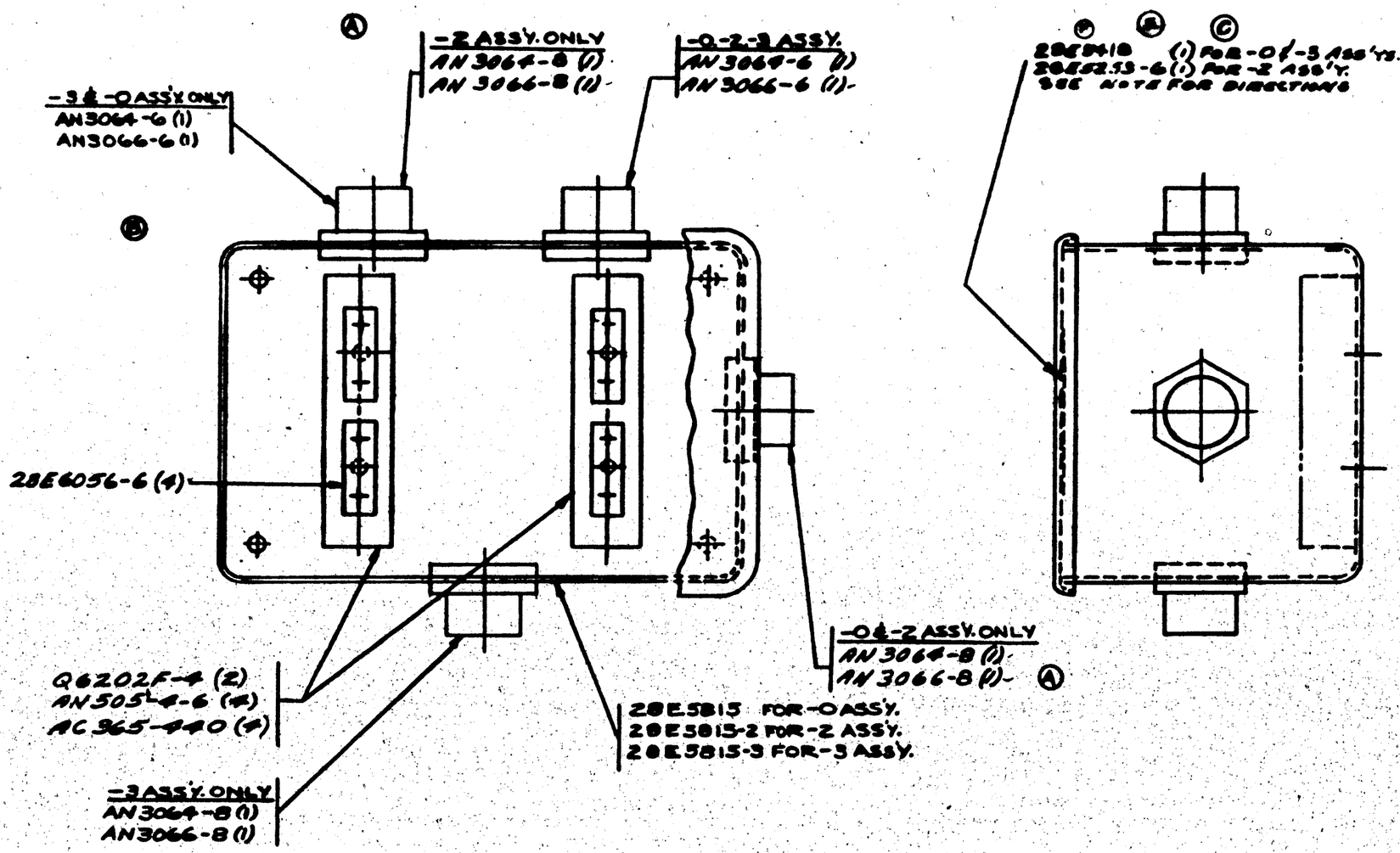

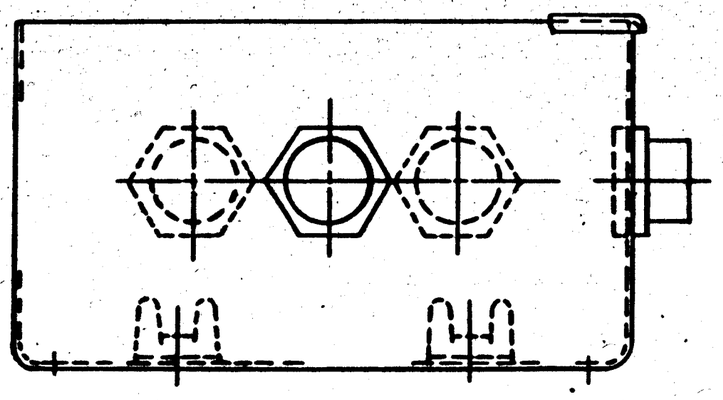

Cont. 88470 for 5370-60
Cont. 88476
Cont. 91870

Ⓓ NOTE: APPLY 28E5253-6 TO INSIDE OF COVER ON -2 ASS'Y
Ⓔ AND 28E5418 TO INSIDE OF COVER ON THE -0 AND -3 ASS'YS. Ⓒ
IF BLUE PRINT CUT-OUT IS USED, APPLY WITH 4 COVER OVER WITH SHELLAC.

PARTS LIST FOR ASSY.																					
PART NO.	STOCK	MATERIAL	SPEC.	LH REQ. -0	RH REQ. -0	LH REQ. -2	RH REQ. -2	LH REQ. -3	RH REQ. -3	LH REQ. -4	RH REQ. -4	REQ. -5									
28E5253-6						2	2	2													
28E5418				1	1				1	1											
28E5815				1																	
28E5815-2						1															
28E5815-3								1													
28E6056-6				4	4	4	4	4	4	4	4										
AC365-440				4		4		4		4											
AN3064-6				1		1		1		1											
AN3064-8				1					1												
AN3066-6				1		1		1		1											
AN3066-8					1				1												
AN5054-6				4		4		4		4											
Q6202F-4				2		2		2		2											

AC					
NAVY NONE	NONE				
HEAT TREAT	FINISH	DRAFT	CHECK	STRUCT	MAT'L

NAME BOX ASSY-ELEC-REMOTE INDICATING COMPASS
CONSOLIDATED AIRCRAFT CORP. San Diego, Calif.

OPP. HAND
SIZE D
28E5816

LET	ALTERATION	DATE	BY

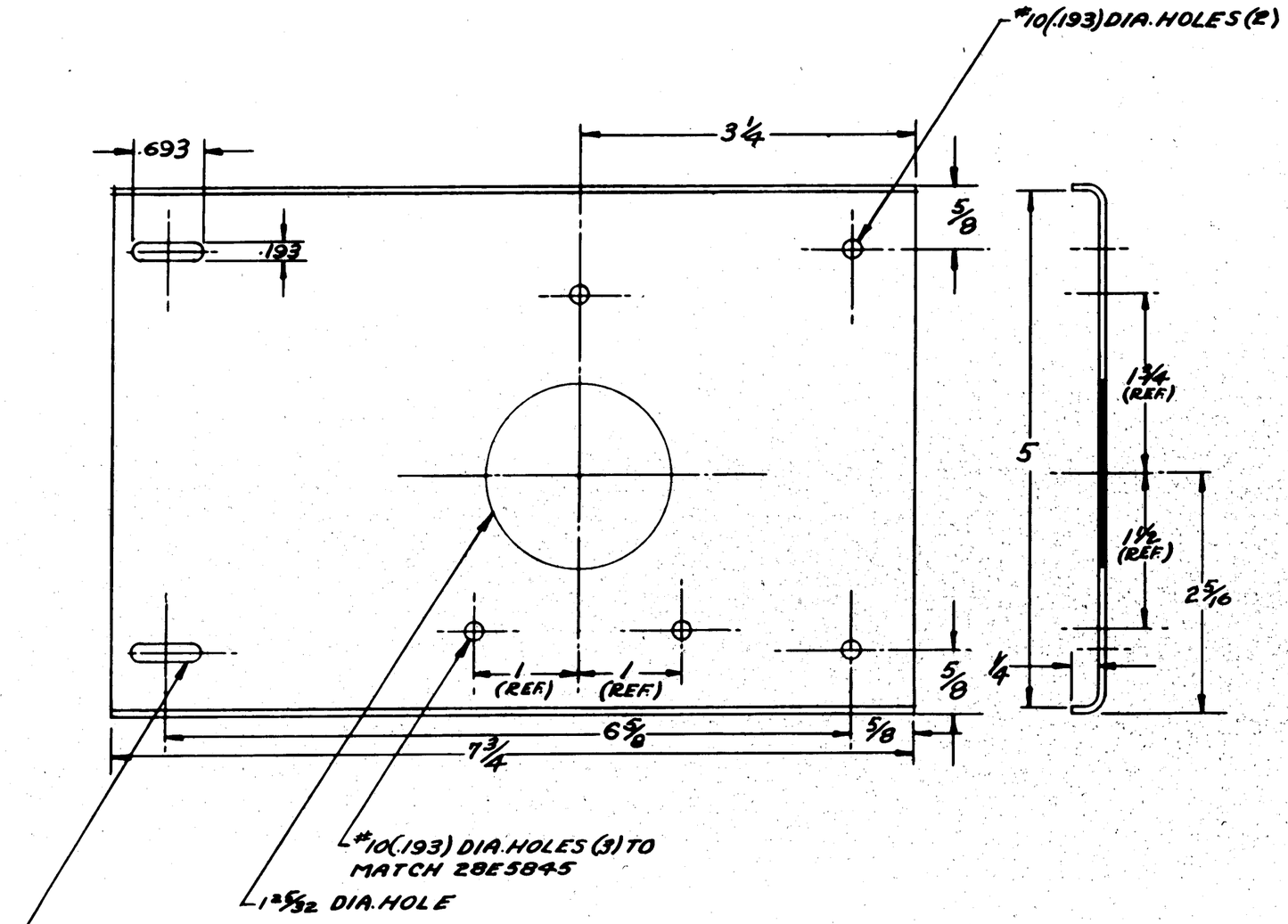

CONT. #NX513595-(ALL)
C.A.C. #164-3

LET	ALTERATION	DATE	BY
	E.O. B2946		
A	IN REMOVED NAF 1128-3 BOX (COVER ASSY.) REPLACED WITH -66-7. MADE FROM NAF 1128-3. IN REQ'TS PER AIRPLANE. CHANGED -0 TO -6 N.A. 28E5643(1) ADDED -7 N.A. 28E5663 (1) WT. CHG. NEG.		
	E.O. B2200T		
B	FROM AUX. VIEW REMOVED 17/32 DIA. HOLE & LOCATING DIMS. 1 3/16 & 1 1/4 IN SIDE VIEW 1 25/32 DIA. HOLE WAS 1 7/32 DIA. HOLE. DIM 17/32 WAS 1 7/16 & DIM 1 21/32 WAS 1 1/4. NEG. WT. CHG.	7-6-43	
	NAF 1128-3		
C	REMOVED 25/32 DIA. HOLE & LOC. DIMS. FR. 1 3/16 FROM -6 WT. CHG. NEG.	7-8-43	
D	ADDED AUX. VIEW & DIMS. 1 3/32, 1 1/4, 19/32, 1 11/64, & #32 (.116) DIA. 2 HOLES. WT. CHG. NEG.	8-18-43	

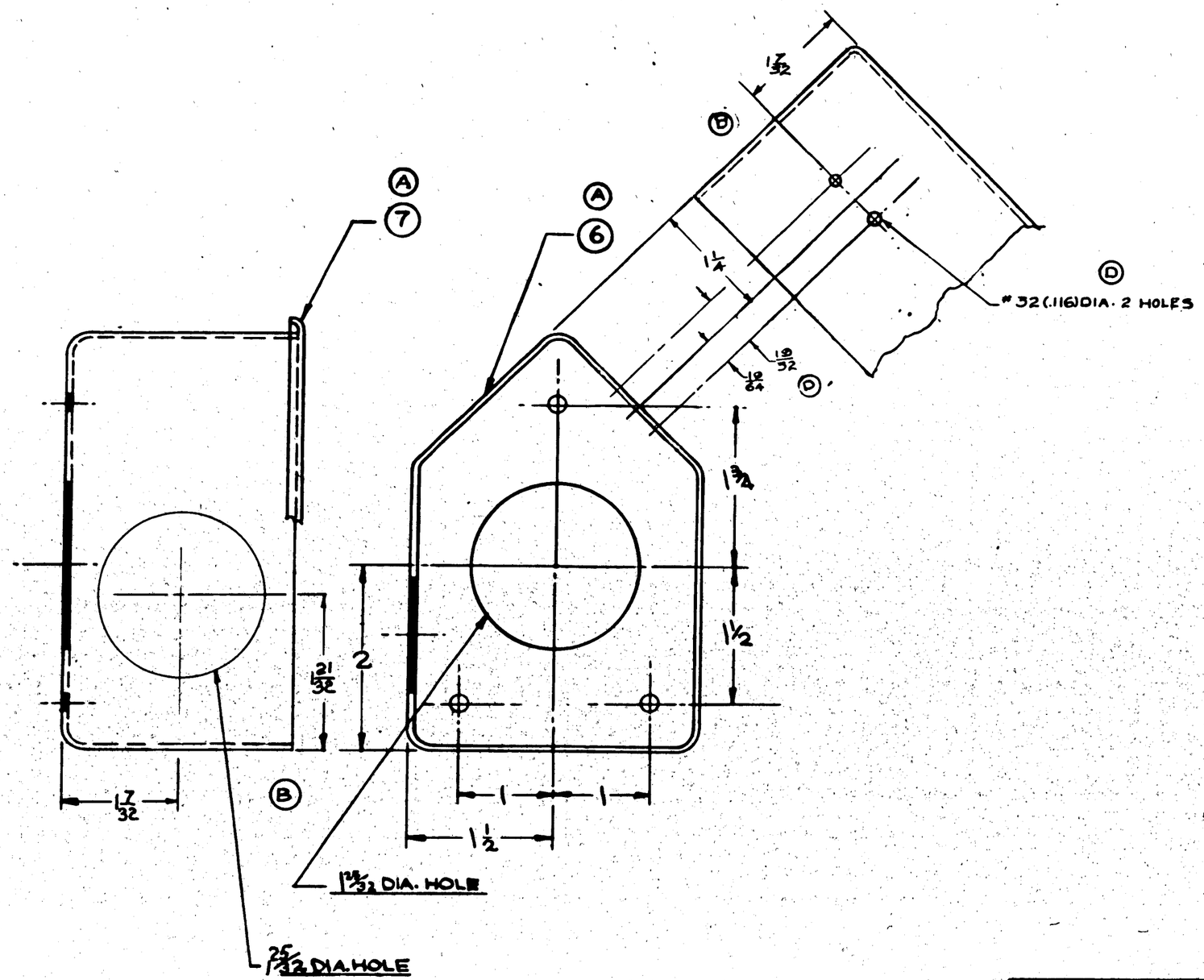

CON'T. #ND 46464 (ALL)
M.C.R. #164-3

APPROVED FOR TOOLING BY
C.B. Humphreys 1-8-43

| | | |

E.O. B2948

LET	ALTERATION	DATE	BY
A	REPLACE 28E5845-6(1) WITH 28E5845-6(1)		
B	NAF1148-20(1) WAS AN3066-20(1) AN3066-20(1) WAS AN3066-[illegible] WT.CHG.NEG.	6-24-43	[illegible]
C	REVISED FROM FACE OF ANGLE & TABS AN3066-4(1) & AN3066-4(1) WT. CHG. NEG.	7-8-43	[illegible]
D	ADDED G6202F-1(1), AN515-4-6 (2), AC365-440(2), (Q7102-AL4(2) WT.CHG.NEG.	7-30-43	[illegible]

SECTION -5

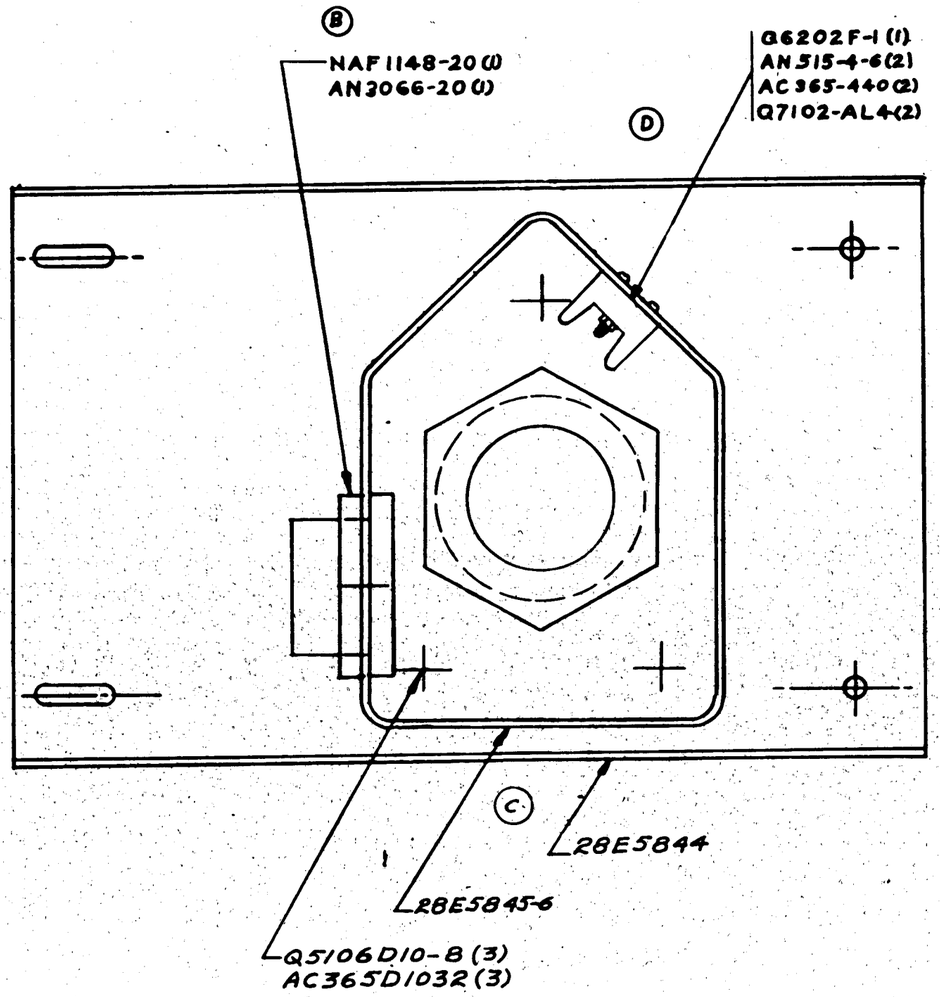

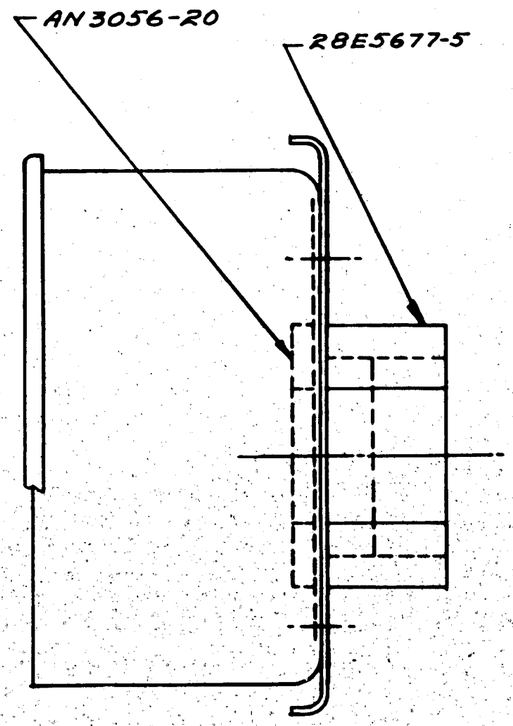

A.C.A. 164-3

| | | |

LTR	REVISIONS	DATE	BY
A	ADD [illegible] ON -2 ASS'Y; -3 ASS'Y & NOTE		
B	ADDED NOTE: NAF1021-12 & NAF1021-11 ARE C.A.C. FURN. BASES ARE SENT TO BREWSTER FOR INSTALLATION NO WT. CHG.	9-10-43	[illegible]
C	ADDED -2R & -2L ASSY; ADDED AN960 (3); AN935-10 (3) & AN510-10-10 (2) NO WT. CHG.	5-8-43	[illegible]
D	ADDED -2L & -2R ASSY FOR PBY-5 (C-21876) [illegible] NEXT ASSY FOR PBY-5A (C-13595) NO WTCHG	[illegible]	[illegible]

E.O. #A36641

E.O. A62334

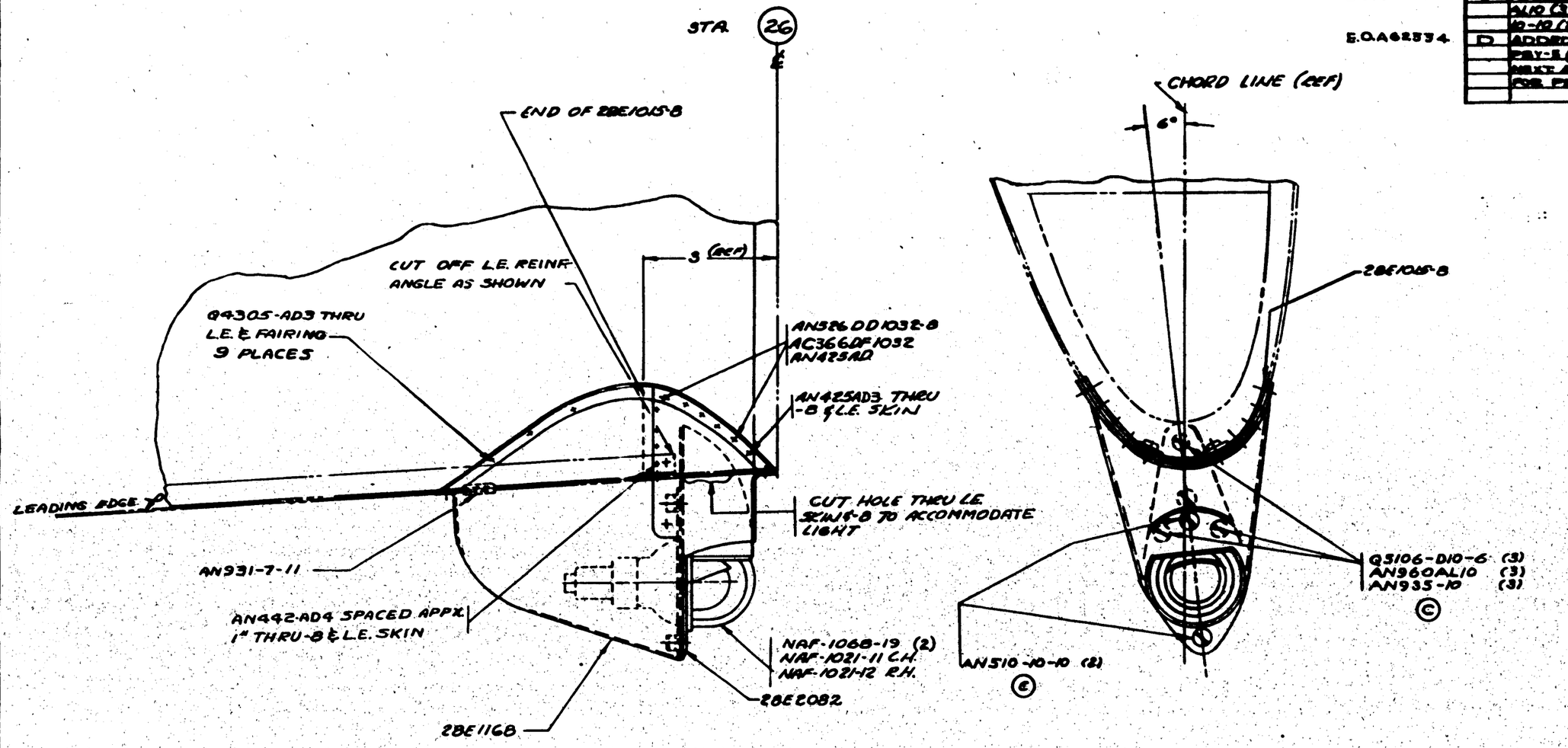

NOTE:

1. CUT AND FORM 28E1015-B TO FIT OVER ANGLE & BLKD 28W126 & L.E. REINF. ANGLE RUNNING LIGHTS MOUNTED 2 FT. INB'D FROM EXTREME WING TIP- FLOATS RETRACTED
2. LIGHTS FURNISHED BY CAC. ON -0 ASS'Y & BASES SENT TO BREWSTER FOR INSTALL.
3. LIGHTS GOV'T. FURNISHED ON -2 ASS'Y. & BASES SENT TO BREWSTER FOR INSTALL.
4. NAF1021-12 & NAF 1021-11 ARE C.A.C. FURN.. BASES ARE SENT TO BREWSTER FOR INSTALL,. Ⓑ

C-13595

*30426 1/ON (C-21876)

CONTRACT #88476 SNIPS 53 TO 146

CONTRACT #21876 #91-260 NOT USE ON SO 85418

ASSY. DASH No.	MODEL	NEXT ASSY.	REQ.
-2R	PBY-5A	28E5318	1
-2L	PBY-5A	28E5318	1
-2R	PBY-5	28E5318	1
-2L	PBY-5	28E5318	1
-0R	28-3AMN	28E6021	1
-0L	28-3AMN	28E6021	1
-2R	PBY-5A	28E6021	1
-2L	PBY-5A		1
-2R	PBY-5		1
-2L	PBY-5		1
-0R	PBY-5B	28E6021	1
-0L	PBY-5B	28E6021	1

REQUIREMENTS PER AIRPLANE

REPLACES — CALC. WT.

REPLACED BY — ACT. WT.

UNLESS OTHERWISE SPECIFIED + 1/32 — SCALE 6"=1'0"

STAMP PART NUMBER WHERE SHOWN

PART No.	STOCK	MATERIAL	SPEC.	LH REQ.	RH REQ.	LH REQ.	RH REQ.	LH REQ.	RH REQ.	LH REQ.	RH REQ.	LH REQ.	RH REQ.
Q3106-D10-6				3	3	3	3						
AN960AL10				3	3	3	3						
AN935-10				3	3	3	3						
AN510-10-10				2	2	2	2						
NAF1068-19		NOTE 3				/	/						
NAF1021-12		NOTE 3					/						
NAF1021-11		NOTE 3				/							
NAF1068-19		NOTE 2		/	/		/						
AN931-7-11				/	/	/	/						
Q4305-AD3													
Q425-AD3													
AN442-AD4													
AC366-DF1032				4	4	4	4						
AN526DD1032-8				4	4	4	4						
28E2082				/	/		/						
NAF1021-12		NOTE 2			/								
NAF1021-11		NOTE 2		/		/							
28E1015-B				/	/	/	/						
28E1168-1					/		/						
28E1168 ?				/		/							

PARTS LIST PER ASSY.

A C				
NAVY NONE	NONE			
HEAT TREAT	FINISH	DRAFT	CHECK	STRUCT

11-16-42	ENG	J.W.H.	MCABS		
MODEL	REQ. AIR 30A	JER	KLEIN	MOLD	
	MAT	APPROV	ENG.		

NAME INSTALL-ELEC-WING TIP RUNNING LIGHT-FAIRING

OPP. HAND 28E6030-R

CONSOLIDATED AIRCRAFT CORP. SAN DIEGO, CALIF.

DWG. D SIZE 28E6030

R

LET	ALTERATION	DATE	BY
A	RELOCATED 5/16 HOLES @ 2 FLANGES TO OPPOSITE SIDE	5-8-42	WILLS
B	CHANGE MAT TO 46A1-CL6 WAS 46A14-CL11 DIR CAST TO SAND CAST	8-8-42	HEINK

BREWSTER E.O. # 550

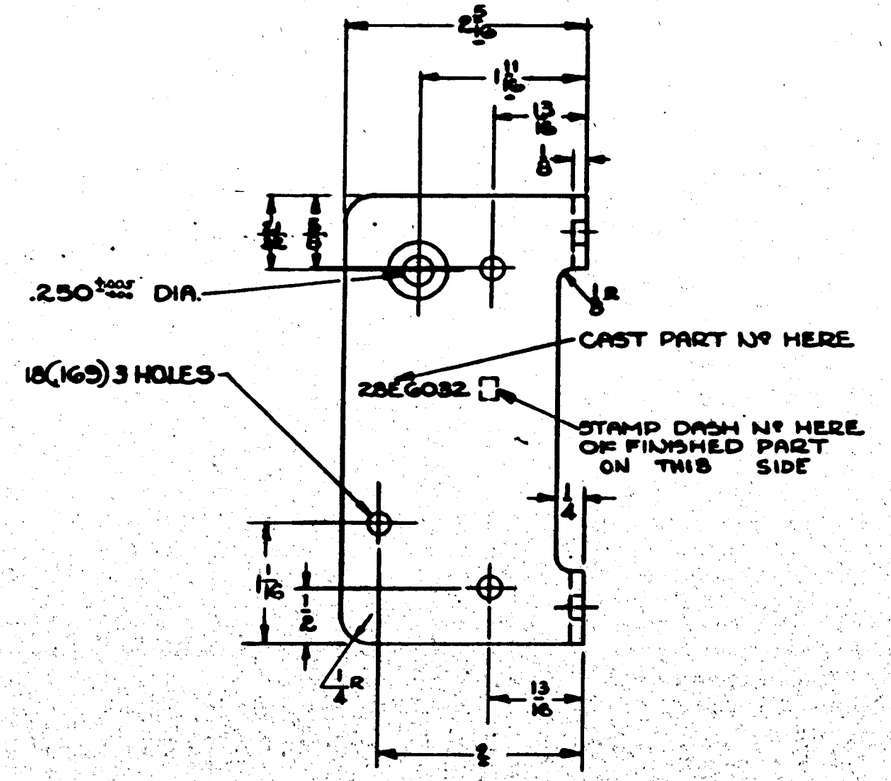

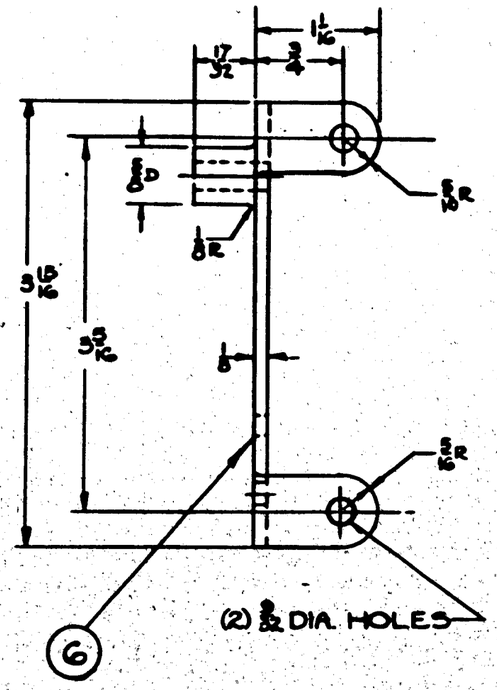

FINISH CODE	
Z	ANODIC TREATMENT
P	P-27 PRIMER
AP	ALUMINIZED PRIMER
C	CADMIUM PLATE

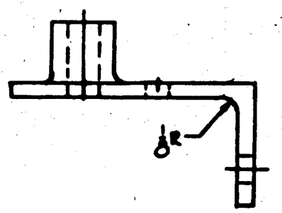

NOTE THESE PARTS FURNISHED BY BREWSTER

	PART No	MODEL	NEXT ASSY.	REQ'D
536 ONC. 88476	-6	PBY-5A	28E5232	1
91 E ONC. 91876	-6	PBY-5	28E6042	1
	-6	28-5ANK	28E6822	1
	-6	PBY-5B	28E6042	1

REQUIREMENTS PER AIRPLANE

REPLACES — Cond. Wt.

REPLACED BY — Act. Wt.

SCALE 12"=1'-0"

± V64

STAMP PART NUMBER WHERE SHOWN

PART No	STOCK	MATERIAL	SPEC.	LH REQ	RH REQ	LH REQ	RH REQ	LH REQ	RH REQ	LH REQ	RH REQ	LH REQ	RH REQ
-0	SAND CASTING	AL. ALLOY	46A1 CL-6										
-2													
-3													
-4													
-5													

PARTS LIST PER ASSY.

A.C.		11-10-41	8-28-42 DESIGN	GARRETT	J.P.R.	KLEIN	J.C.H.
NAVY 52000*	Z-P-AP		12-1-41			12-22-41	WOLD
HEAT TREAT	FINISH	DRAFT	CHECK	STRUCT	MAT	APPROV	ENG

NAME BRACKET-ELEC-FLOAT DOWN LIMIT SWITCH

OPP. HAND NONE

SIZE D

28E6032

CONSOLIDATED AIRCRAFT CORP. SAN DIEGO, CALIF.

R

DASH NO.	A	B	C	D	E	F		
-6	P.D.I.		OFF			ON		
-7	CAMERA	HEATER	OFF			ON		
-8	COMP'T.	LIGHT	OFF			ON		
-9	RECEPT.		OFF					
-10	BOMB	RELEASE	OFF			ON		
-11	PITOT	HEATER	OFF			ON		
-12	COLD	AIR	DEFROST	OFF		ON		
-13	GYRO	LIGHTS	OFF			ON		
-14	WARNING	HORN	OFF			ON		
-15	ANCHOR	LIGHTS	OFF			ON		
-16	ASTRO.	RECEPT	OFF			ON		
-17	MOTOR	ALTER	OFF			ON		
-18	BOMBS'T.	& P.D.I.						
-19	BOMB	RELEASE						
-20	ELEC.	STARTER						
-21	COOKING	STOVE						
-22	CAMERA	HEATER						
-23	CAMERA	CONTROL						
-24	COMP'T	LIGHTS	FWD.					
-25	COMP'T.	LIGHTS	AFT.					
-26	INSTR.	LIGHTS						
-27	INSTRU-	-MENTS						
-28	EXTERIOR	LIGHTS						
-29	COMPT	HEATERS						
-30	RECEPT.	FWD.						
-31	RECEPT.	AFT.						
-32	RECEPT.	NACELLE						
-33	FLOAT	CONTROL						
-34	OIL	DILUTE						
-35	WARNING	HORN						
-36	DEICER	EQUIP						
-37	TR9000		OFF			ON		
-38	R3039	T3040	OFF			ON		
-39	R3003		OFF			ON		
-40	RECOG.	LIGHTS	OFF			ON		
-41	BOMBER'S	HEATER	ON			OFF		
-42	PILOT'S	HEATER	ON			OFF		
-43	CO-PILOT'S	HEATER	ON			OFF		
-44	RADIO-OPER	HEATER	ON			OFF		
-45	NAVIG.	HEATER	ON			OFF		
-46	GUNNER'S	HEATER	ON			OFF		
-47	MECH.	HEATER	ON			OFF		
-48	COMM.	RADIO	OFF			ON		
-49	DEICER	EQUIP.	WINDSHD	WIPER				
-50	CAMERA	N-4	OFF			ON		
-51	CAMERA	N-4						
-52	ASSIST	FEED	OFF			ON		

LET	ALTERATION	DATE	BY
A	ADDED -10 TO -16 INCL.	[illegible]	[illegible]
B	ADDED -16 TO -39 INCL.	[illegible]	[illegible]
C	ADDED -40 TO -47 INCL.	[illegible]	[illegible]
D	ADDED -48 ONLY & REQ FOR -17	[illegible]	[illegible]
E	REMOVED MODEL PER'S AN REQUIREMENTS PER AIRPLANE COLUMN & REPLACED WITH PER-SA.	[illegible]	[illegible]
EQA47386 F	REVISED REQ/PLANE BLK.	7-1-42	[illegible]
EQA51223 G	ADDED -49	8-[illegible]-42	[illegible]
E.QA47670C H	ADDED -50(1) & -51(1) W.I. CHANGE	[illegible]	[illegible]
E.QA63758 J	ADDED -52(2), WT. CHG. NEG.	[illegible]	[illegible]

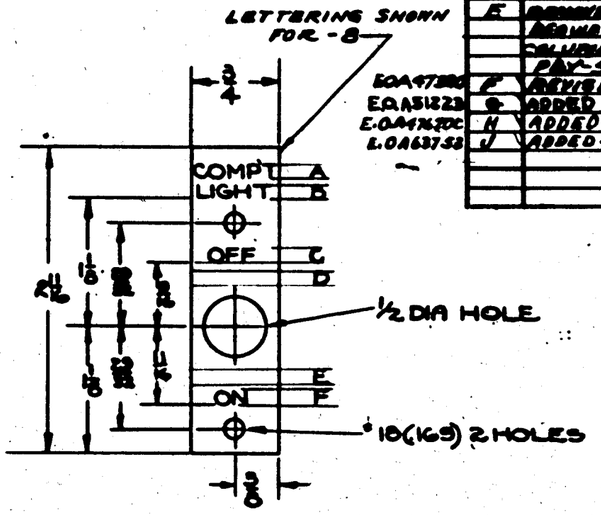

NOTES
1. LETTERING TO BE 1/16 BETWEEN LINES & 1/8 HIGH BLOCK RAISED & POLISHED ABOVE ETCHED DULL BLACK BACKGROUND.
2. WHEN "F" FOLLOWS PART Nº ALL LETTERS TO BE RECESSED AND FILLED WITH PALE GREEN FLUORESCENT LACQUER (#10 U.S RADIUM Cº OR EQUIV) BACKGROUND DULL BLACK.
3. MATERIAL - .030 AL. SHT. SPEC. A.C. 57-151-1 HH SPEC NAVY 47A2 HH.

ASSY DASH NO.	MODEL	NEXT ASSY.	REQ
-33	PBY-5B	28E6258	1
-32	PBY-5B	28E6258	1
-31	PBY-5B	28E6258	1
-30	PBY-5B	28E6258	1
-29	PBY-5B	28E6258	1
-28	PBY-5B	28E6258	1
-27	PBY-5B	28E6258	1
-26	PBY-5B	28E6258	1
-25	PBY-5B	28E6258	1
-24	PBY-5B	28E6258	1
-23	PBY-5B	28E6258	1
-22	PBY-5B	28E6258	1
-21	PBY-5B	28E6258	1
-20	PBY-5B	28E6258	1
-19	PBY-5B	28E6258	1
-18	PBY-5B	28E6258	1
-17	PBY-5B	28E6187	1
-16	PBY-5B	28E6179	1
-15	PBY-5B	28E6125	1
-14	PBY-5B	28E6125	1
-13	PBY-5B	28E6125	1
-12	PBY-5B	28E6125	1
-11	PBY-5B	28E6125	1
-10	PBY-5B	28E6125	1
-9	PBY-5B	28E6125	1
-8	PBY-5B	28E6125	1
-7	PBY-5B	28E6125	1
-6	PBY-5B	28E6125	1

REQUIREMENTS PER AIRPLANE

REPLACE
REPLACED BY
SCALE WT.
ACT. WT.

SCALE 12"=1'-0"

+ 1/32

STAMP PART NUMBER WHERE SHOWN

ASSY DASH NO.	MODEL	NEXT ASSY.	REQ
-51	PBY-5B	28E6258	1
-50	PBY-5B	28E6351	3
-50	PBY-5B	28E6358	1
-49	PBY-5B	28E6259	1
-48	PBY-5B	28E6259	1
-47	PBY-5A	28E6748	1
-46	PBY-5A	28E6272	1
-45	PBY-5A	28E6204	1
-44	PBY-5A	28E6204	1
-43	PBY-5A	28E6275	1
-42	PBY-5A	28E6275	1
-41	PBY-5A	28E6274	1
-40	PBY-5B	28E6259	1
-39	PBY-5B	28E6259	1
-38	PBY-5B	28E6259	1
-37	PBY-5B	28E6258	1
-36	PBY-5B	28E6258	1
-35	PBY-5B	28E6258	1
-34	PBY-5B	28E6258	1

(E) C.B8476
53# ON
*151 & ON

PURCHASE TO DWG.

ASSY DASH NO.	MODEL	NEXT ASSY.	REQ
-52	PBY-5B	28E5243	2
-9	PBY-5B	28E6238	1
-8	PBY-5B	28E6238	1
-8	PBY-5B	28E6125	1
-8	PBY-5B	28E6066	2
-8	PBY-5B	28E6198	1
-8	PBY-5B	28E6184	1
-8	PBY-5B	28E6198	2
-8	PBY-5B	28E6204	1
-8	PBY-5B	28E6215	1

PART No.	STOCK	MATERIAL	SPEC.	LH REQ	RH REQ	LH REQ	RH REQ	LH REQ	RH REQ	LH REQ	RH REQ
-8		NOTED									

PARTS LIST PER ASSY.

A.C.		11-8-41	12-8-41 Tinkerman	Chapple		K.Lam	McCord
NAVY NONE	NOTED		Hoffman	Carlson	12-10-41	V.B.Z.	12-15-41	Wickham
HEAT TREAT	[illegible]SH	DRAFT	CHECK	STRUCT	PROJ	ADVERT	SPEC

NAME NAME PLATE - ELEC - SINGLE POLE SWITCHES

CONSOLIDATED AIRCRAFT CORP. San Diego, Calif.

OPP. HAND NONE

DWG D

28E6035

R

LET	ALTERATION	DATE	BY
A	Q6202-6 WAS Q6202-F6		
	WT. CHG NEG.	4-27-43	WILLETT
B	ADDED 28E5217-6 & -7 & 28E5211-6		
	ADDED NOTES 1 THRU 4 & 28E6059-7		
	(REF) WT. CHG NEG.	4-27-43	SMITH
C	CREATED -3 & 4 ASSY. NEG WT CHG	6-4-43	EASTMAN
D	ADDED 28E6337 AND 28E6338 (U)		
	E NOTE #5 "SHELLAC --- SHELLAC		
	NEG WT CHG.	6-4-43	EASTMAN
E	REVISED REQ'D ON AIRPLANE BLOCK NO WT CHG	8-27-43	BOWER
F	IN REQ'D AIRPLANE BLK. NO. 286		
	6281 WAS 28E4014 FOR PBY-5		
	C. 91876 #91 ON. NO WT. CHG	10-15-43	FUNK
G	CHG. NOTE #1 "ON RESPECTIVE BOXES		
	SHELLAC 28E5211-6 & 28E6211-6 TO		
	INSIDE OF COVER 28E6059-7 & COVER		
	WITH SHELLAC TO "ON RESPECTIVE ---"		
	& SHELLAC". WT. CHG. NEG.	1-10-44	MANN
H	ADD. IN B/M. 28E5217-8 (U) PER PBY-5A		
	CANCELLED 28E5217-7 PER PBY-5A REVISED		
	NOTE 2. --- "AND - EFFECTIVE --- 4281 UP."		
	WAS NOTE 2. --- "& CONT. 88476 #53 & UP."	1-28-44	ALMQUIST
I	NOTE #5 REVISED - "FOR --- ONLY"	3-22-44	FRASER
	ADD WT. & LOC. PBY-5A 28E6337 & 28E6338	3-22-44	FRASER
K	ADD NOTE #6		
	CREATED -4 ASSY THE SAME AS -0,		
	EXCEPT ADDED AC365-1032 (1),		
	AC345-10 (1), AN935-10 (1),		
	Q7102 AL10 (2), AN520-10-10 (1),		
	& AN3064-6 (1) AN3066-6 (1).		
	-5 ASSY FOR PBY-5A NO.		
	& 28E6291 (1) WAS -0 ASSY.		
	EXTENDED REQ. AN3064-4 (1)		
	& AN3066-4 (1) TO -3 ASSY.		
	WT. CHG. + .1345.	3-23-44	FRASER

E.O. A34711
E.O. A33697
E.O. A41734
E.O. A60934
E.O. A56060
F.L.R. 15647
E.O. 6.2731

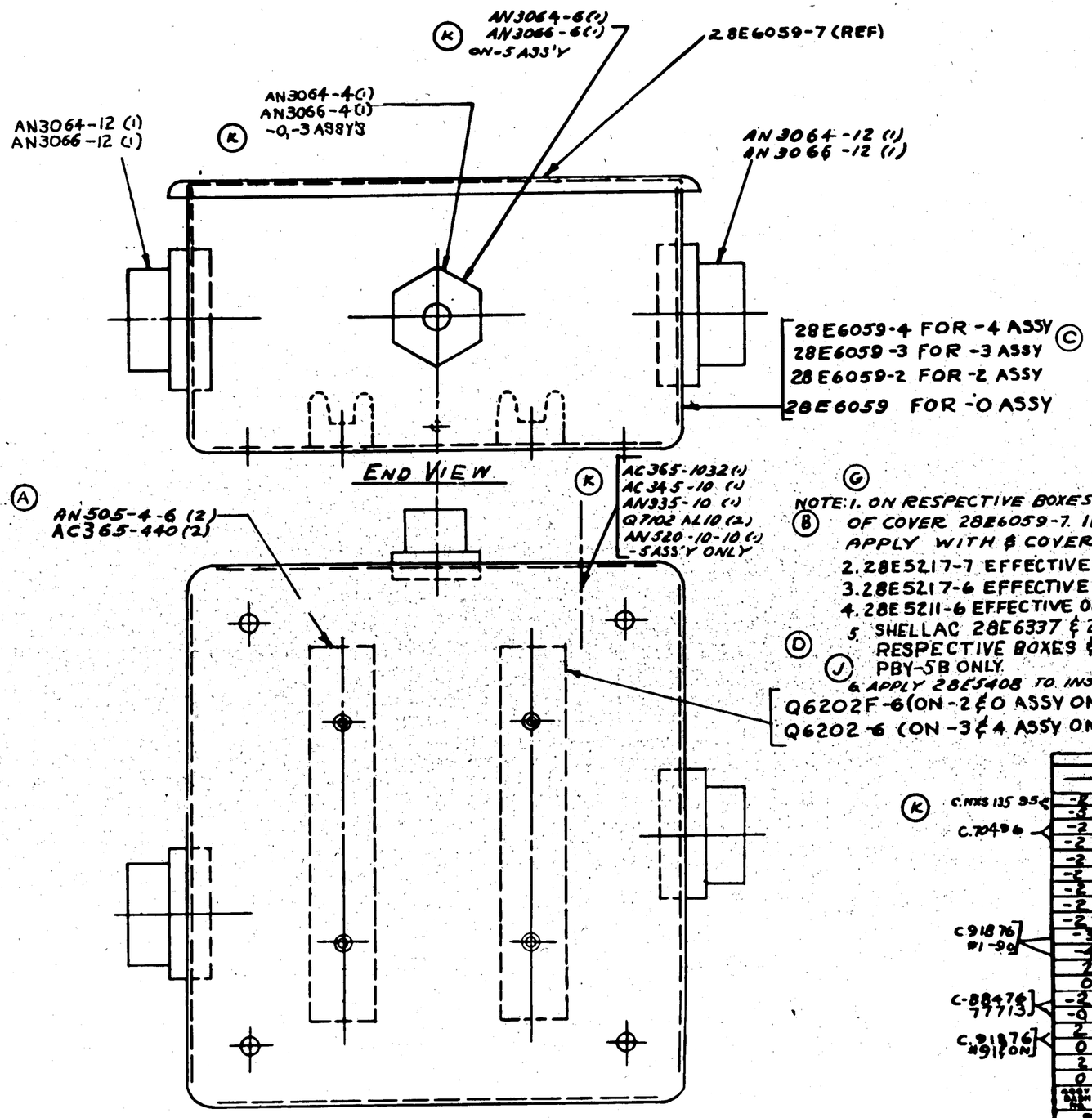

BOTTOM VIEW
COVER REMOVED

G

NOTE: 1. ON RESPECTIVE BOXES APPLY 28E5217-6 & -7 & 28E5211-6 TO INSIDE OF COVER 28E6059-7. IF BLUE PRINT CUT OUT IS USED APPLY WITH & COVER OVER WITH SHELLAC.
B
2. 28E5217-7 EFFECTIVE ON CONT. 91876, #91 & ON & -8 EFFECTIVE ON CONT. 88476 #53 & ON. H
3. 28E5217-6 EFFECTIVE ON CONT. 91876, #1-90.
4. 28E5211-6 EFFECTIVE ON CONT. 91876, #1 & ON & CONT. 88476, #53 & ON.
5. SHELLAC 28E6337 & 28E6338 TO INSIDE OF COVERS 28E6059-7 ON RESPECTIVE BOXES & COVER OVER WITH SHELLAC TO BE USED ON D J PBY-5B ONLY.
6. APPLY 28E5408 TO INSIDE OF COVER FOR -5 ASS'Y. K

C

| | | |

LET	ALTERATION	DATE	BY
A	CREATED - 28-6 ASS'Y & NO. WT. CHG.		
B	ADDED (.193)X(.693) SLOTS (2) & (4) (.196 DIA) HOLES WERE (4) NEG. WT. CHG.	6-5-42	
C	CREATED -5 ASSY FROM PBY5A, C; NO -(-)1951 -5 ASSY TO COMPLY WITH OF -11 & -7, -11 BOX IDENTICAL TO -6 EXCEPT THAT 7/32 DIA HOLE WAS 7/32 & ADDED #10 (.193) DIA HOLE (1)	10-14-42 / V-12-43	[illegible] / BENSON

E.O. A53490

E.O. A60935

E.O. B2794

NOTES:
(1) BOX & COVER MAY BE PURCHASED FROM MONARCH TOOL & INSTR. CO. SPECIFYING:
1011 R-228 BOX
MT-CSD1011 COVER

(2) BOX TO BE FURNISHED WITH TIGHT FITTING COVER NON-LOSEABLE STEEL SCREWS & OURAL WASHERS
(3) REMOVE FINISH 3/32 RADIALLY AROUND 21/32 & 1 7/32 DIA HOLES
(4) FINISH: P-INSIDE & P-GP OUTSIDE

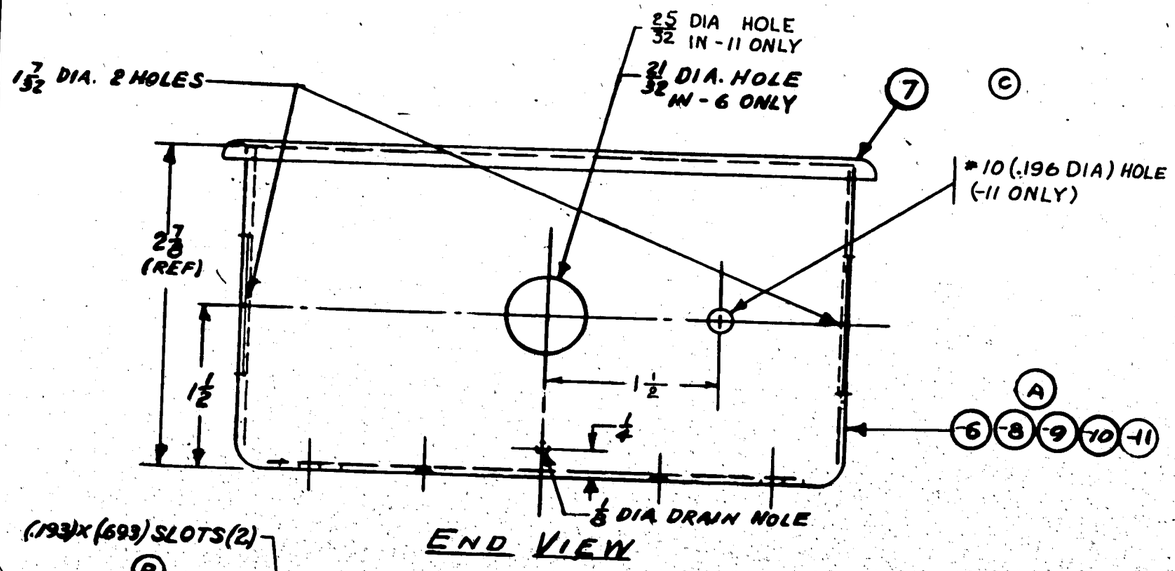

END VIEW

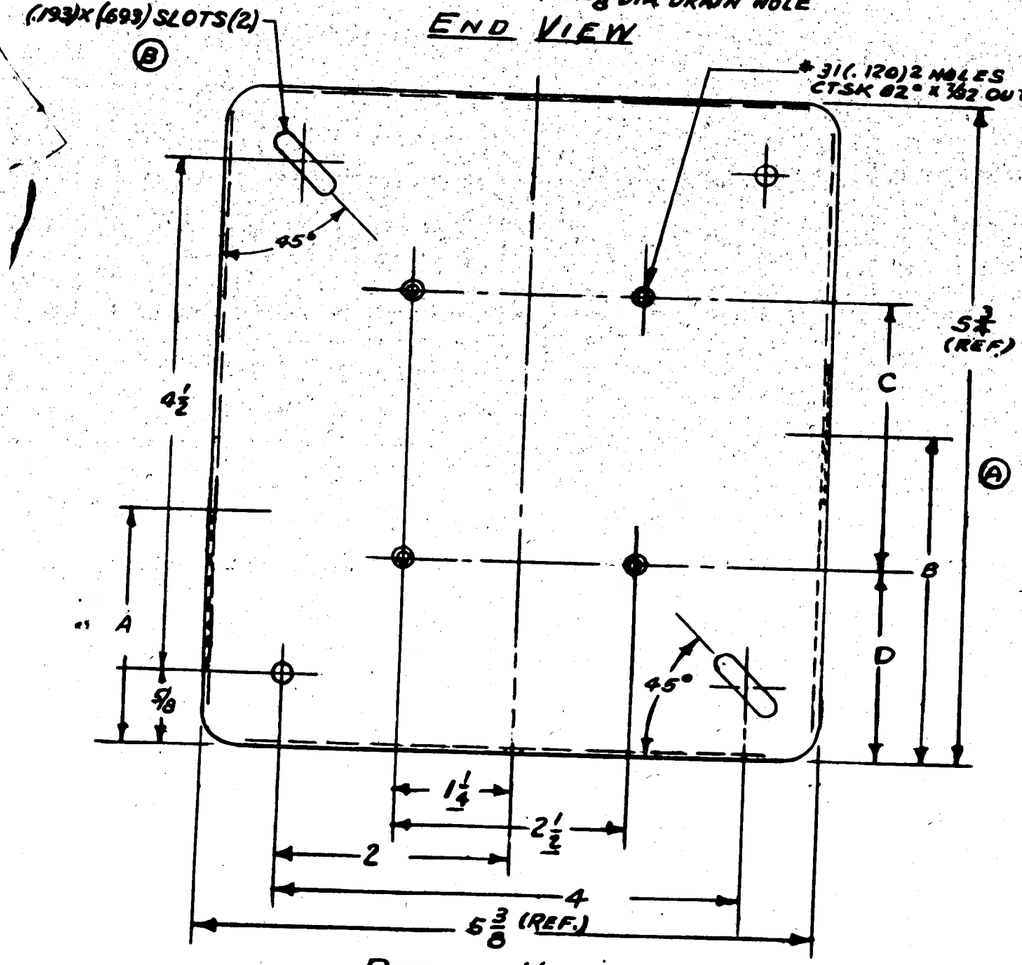

BOTTOM VIEW
COVER REMOVED

Ⓐ

PART NO.	DIMEN "A"	DIMEN "B"	DIMEN "C"	DIMEN "D"
-6	2	2 7/8	2 3/8	1 11/16
-8	2 7/8	2	2 3/8	1 11/16
-9	2	2 7/8	3	1 3/8
-10	2 7/8	2	3	1 3/8
-11	2	2 1/8	2 3/8	1 1/8

Ⓒ

ASSY. DASH NO.	MODEL	NEXT ASSY.	REQ.
-5	PBY-5A	28E6058	1
-2	PBY-5A	28E6058	1
-2	PBY-5A	28E6058	1
-2	PBY-5	28E6058	1
-4	PBY5	28E6058	1
-5	PBY5		1
-2	PBY5A		1
-0	PBY5A		1
-2	PBY5		1
-0	PBY5		1
-2	PBY-5B	28E6058	1
-0	PBY-5B	28E6058	1

C#3595
C70496
C#1-30
#1 TO 52 C#77715
C#91-ON

REQUIREMENTS PER AIRPLANE

REPLACES -2 28E6058 -2 28E6058

REPLACED BY

ACT. WT.

LIGHT DO DIMENSIONS UNLESS OTHERWISE SPECIFIED ± 1/32

SCALE 12" = 1'-0"

STAMP PART NUMBER WHERE SHOWN

PART NO	STOCK	MATERIAL	SPEC.	LH REQ.	RH REQ.	LH REQ.	RH REQ.	LH REQ.	RH REQ.	LH REQ.	RH REQ.	LH REQ.	RH REQ.
-11	BOX	NOTED										1	
-10	BOX	NOTED											1
-9	BOX	"								1			
-8	BOX	NOTED						1					
-7	COVER	NOTED		1	1	1	1						
-6	BOX	"		1									

PARTS LIST PER ASSY.

FINISH CODE	
Z	ANODIC TREATMENT
P	P-29 PRIMER
ZP	ALUMINIZED PRIMER
C	CADMIUM PLATE

AC		MALLMAN				
NAVY NONE	NOTED	12-8-42				
HEAT TREAT	FINISH	DRAFT	CHECK	STRUCT	MAT	APPROV	ENG

NAME BOX - ELEC. OUTER PANEL JUNCTION

OPP. HAND

CONSOLIDATED AIRCRAFT CORP. SAN DIEGO, CALIF.

DWG. SIZE D

28E6059

R

LET	ALTERATION	DATE	BY
A	CHANGED LOCATION AIR COND. HOLES & ADDED (4) ATR HOLES AROUND PERIM. PER SA 28M1478	7/16/42	[illegible]
B	CHGD. 21/32, 29/32, 17/32 DIA HOLES WERE FOR -8, 29/32, 31/32, 17/32 WERE FOR -6, 3/4 DIMS WERE 1 1/4 & 3 DIM WAS 2 3/4 NO WT. CHG. BREW. E.O.567	9/4/42	MARTIN
C	REMOVED 1/8 DRAIN HOLE FROM TOP OF BOX NO WT. CHG. BREW E.O.585	9/16/42	MARTIN

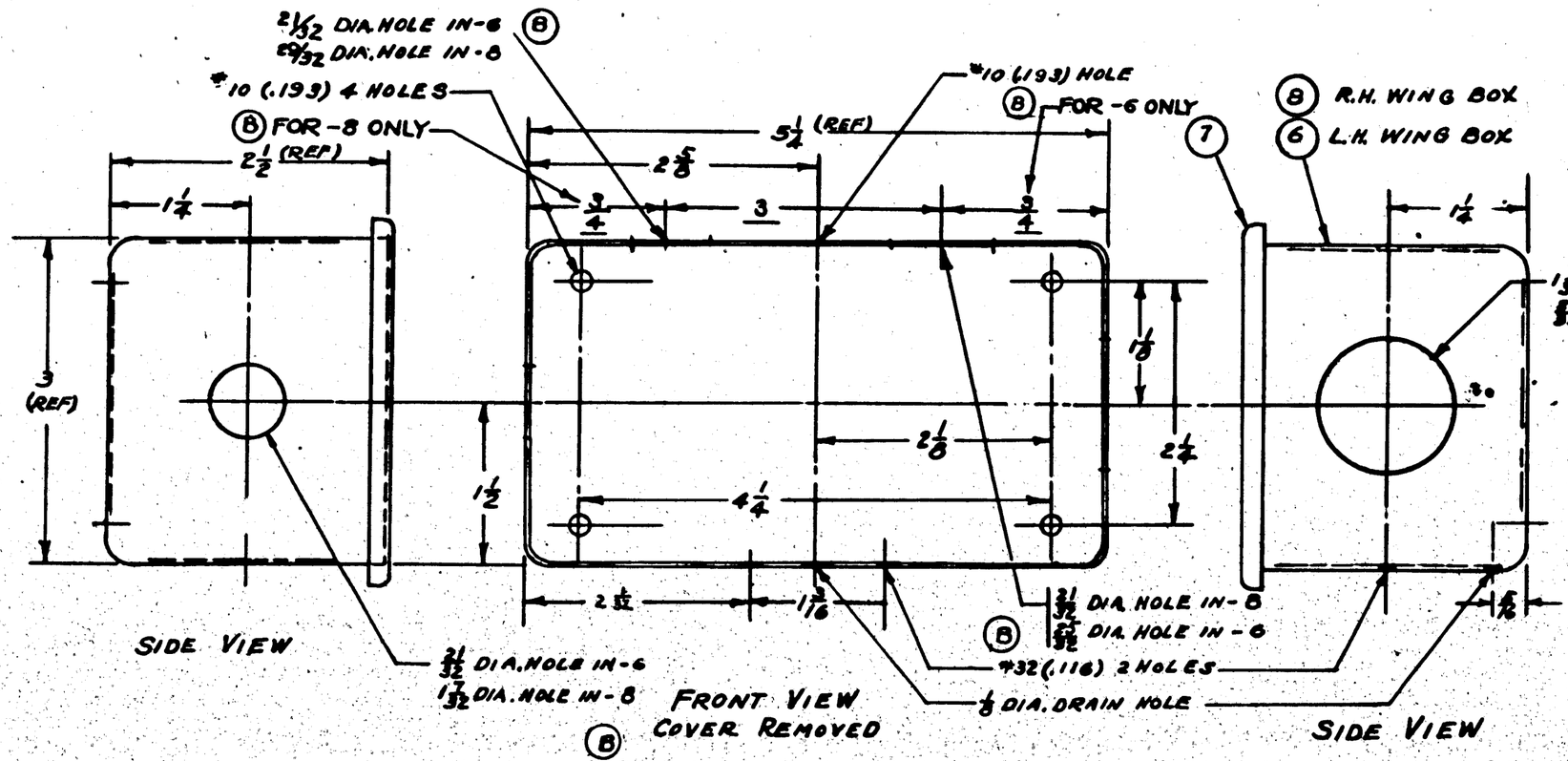

NOTES:

(1) BOX & COVER MAY BE PURCHASED FROM MONARCH TOOL & INSTR. CO. SPECIFYING:
1034 R-216 BOX
MT-C3D 1034 COVER

OR FROM POULSEN & NARDON CO. SPECIFYING:
1193-216N BOX
1193-33D COVER

(2) BOX TO BE FURNISHED WITH TIGHT FITTING COVER. NON-LOSEABLE STEEL SCREWS & DURAL WASHERS

(3) REMOVE FINISH 3/32 RADIALLY AROUND 21/32 & 29/32 DIA. HOLES.

FINISH:- P-INSIDE
PAP OUTSIDE.

FINISH CODE	
Z	ANODIC TREATMENT
P	P-27 PRIMER
AP	ALUMINIZED PRIMER
C	CADMIUM PLATE

NOTE PARTS FURNISHED BY BREWSTER

-2	28-SAMN	28E6083	1
-0	28-SAMN	28E6083	1
2	PBY-5	28E6083	1
0	PBY-5	28E6083	1
2	PBY-5A	28E6083	1
0	PBY-5A	28E6083	1
2	PBY5D	28E6083	1
0	PBY5A	28E6083	1

Cont. 91876. Ships 70 & on
Cont. 88476 Ships 53 & on

ASSY. DASH NO.	MODEL	NEXT ASSY.	REQ.

REQUIREMENTS PER AIRPLANE

REPLACES — CALC. WT.
REPLACED BY — ACT. WT.
SCALE 12" = 1'0"
1/32
STAMP PART NUMBER WHERE SHOWN

PART No.	STOCK	MATERIAL	SPEC.	LH REQ	RH REQ	LH REQ	RH REQ	LH REQ	RH REQ	LH REQ	RH REQ	LH REQ	RH REQ
-8	Box												
-7	Cover } C.A.C. Box No. 35			1		1							
-6	Box												
PARTS LIST PER ASSY.				-0		-2		-3		-4		-5	

A.C.		9/30/41	Stress Anal.	Engr. Dept.	L.R.P	KLEIN	MICHAEL
NAVY NONE	NOTE'D	WALMAN	Preliminary			4-16-42	WOLD
HEAT TREAT	FINISH	DRAFT	CHECK	STRUCT	MAT	Approv	ENG

NAME BOX - ELEC. WING LIGHT JUNCTION
OPP. HAND NONE
CONSOLIDATED AIRCRAFT CORP. San Diego, Calif.
SIZE D
28E6082

LET	ALTERATION	DATE	BY
	ADDED VIEW FOR -2 ASSY ONLY.	3-31-42	
	ADDED AN FITTINGS TO B.M.		
A	ADDED 28E6333 (1) & 28E6334 (1). ADDED NOTE 4 & "SHELLAC ETC" NEG. WT. CHG	5-5-42	
B			
C	ADDED 28E5838-6 & -7 (1) EA. -7 (1) TO -0 & -2 ASSY. REQ'D & ADD NOTES # 3 & 4 SHELLAC ---- PER-SA (NEG. WT. CHG)	10-15-42	
D	REVISE PART'S/AIRPLANE (NO WT. CHG)	10-15-42	

FOR A41732

B of A36014

B of A41732

AN3064-6 (1)
AN3066-6 (1)

AN3064-12 (1)
AN3066-12 (1)

Q7102AL10 (2)
AC365-1032 (1)
AN335-10L (1)
AN345-10 (1)
AN520-10-12 (1)

AN3064-4 (2)
AN3066-4 (2)

28E6082-0 FOR -0 ASSY.
28E6082-2 FOR -2 ASSY.

Q6202F-4 (1)
AN515-4-6 (2)
AC365-440 (2)
Q7102AL4 (2)

FRONT VIEW
COVER REMOVED
FOR -0 ASSY.

SIDE VIEW

AN3064-4 (2)
AN3066-4 (2)

AN3064-8 (1)
AN3066-8 (1)

AN3064-12 (1)
AN3066-12 (1)

28E6082-2

Q6202F-4 (1)
AN515-4-6 (2)
AC365-440 (2)
Q7102AL4 (2)

FRONT VIEW
Ⓐ COVER REMOVED
FOR -2 ASSY.

NOTE: 1- PARTS FURN. BY BREWSTER
Ⓑ 2- SHELLAC 28E6333 & 28E6334 TO COVERS 28E6082-0 & 28E6082-2 RESPECTIVELY & COVER WITH SHELLAC
3- SHELLAC 28E5838-6 TO 28E6082-0 COVERS FOR PBY-5 & PBY-5A.
4- SHELLAC 28E5838-7 TO 28E6082-2 COVERS FOR PBY-5 & PBY-5A.

Ⓒ

ASSY. DASH No.	MODEL	Next Assy.	REQ'D
-2	PBY5A	28E6021	1
-0	PBY5A	28E6021	1
-2	PBY5	28E6021	1
-0	PBY5	28E6021	1
-2	28E5AHN	28E6021	1
-0	28E5AHN	28E6021	1
-2	PBY-5B	28E6021	1
-0	PBY5B	28E6021	1

C 28476 #53-140
C 91876 #01-200
NOT USED ON S.O. 952-18

REQUIREMENTS PER AIRPLANE

REPLACES — Calc. Wt.

REPLACED BY — Act. Wt.

ADD ON DIMENSIONS UNLESS OTHERWISE SPECIFIED ± 1/32 — SCALE 12" = 1'0"

STAMP PART NUMBER WHERE SHOWN

PART No.	STOCK	MATERIAL	SPEC.	LH REQ. -0	RH REQ. -2	LH REQ. -3	RH REQ. -4	LH REQ. -5
28E5838-7					1			
28E5838-6				1				
28E6334					1			
28E6333				1				
AN3066-8							1	
AN3064-8							1	
AN3066-6				1				
AN3064-6				1				
AN3066-12				1	1			
AN3066-4				2	2			
AN3064-12				1	1			
AN3064-4				2	2			
AN935-10L				1				
AN520-10-12				1				
AN515-4-7				2	2			
AC365-1032				1				
AC365-440				2	2			
AN345-10				1				
Q7102-AL10				2				
Q7102-AL4				2	2			
Q6202F-4				1	1			
28E6082-2					1			
28E6082-0				1				

PARTS LIST PER ASSY.

A.C.		12-26-41	SHAVER	GERBER
NAVY NONE	NONE	HALLMAN	1-8-42	L.R.P.
HEAT TREAT	FINISH	DRAFT	CHECK	STRUCT

KLEIN	MCABE				
1-15-42	WOLD				
MAT		APPROV		ENG.	

NAME BOX ASSY. - ELEC. WING LIGHT JUNCTION

OPP. HAND NONE

CONSOLIDATED AIRCRAFT CORP. San Diego, Calif.

DWG. SIZE D

28E6083

R

LET	ALTERATION	DATE	BY
A	IN 3/4 C.A.C. NOTES-RAN WAS "NOTE-1" & IN NOTES NOT WAS "NOTE-1" & FOR WAS "NOTE-1" & WAS "NOTE-1" & IN.	5-28-41	
B	-8 REPLACES -6 FOR -OR ASS'Y. NOTE "25/32 DIA.----ONLY" WAS "25/32 DIA. HOLE" WT. CHG. NEG.	6-23-41	
C	RELOCATED 25/32 DIA. HOLE & #32 HOLES (2) FOR -8 ONLY.	6-27-41	

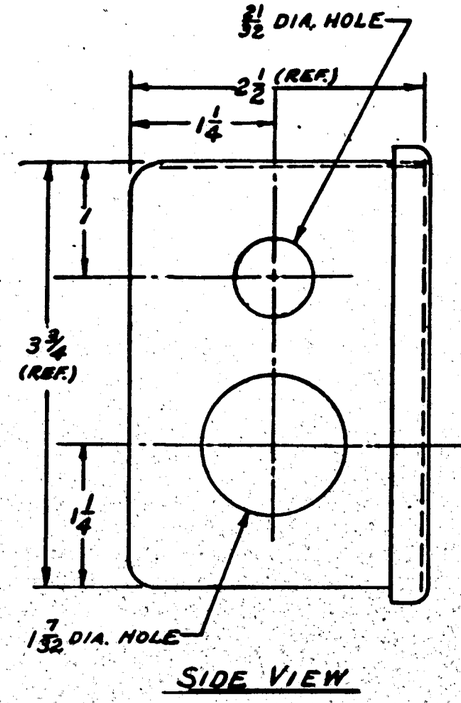

SIDE VIEW

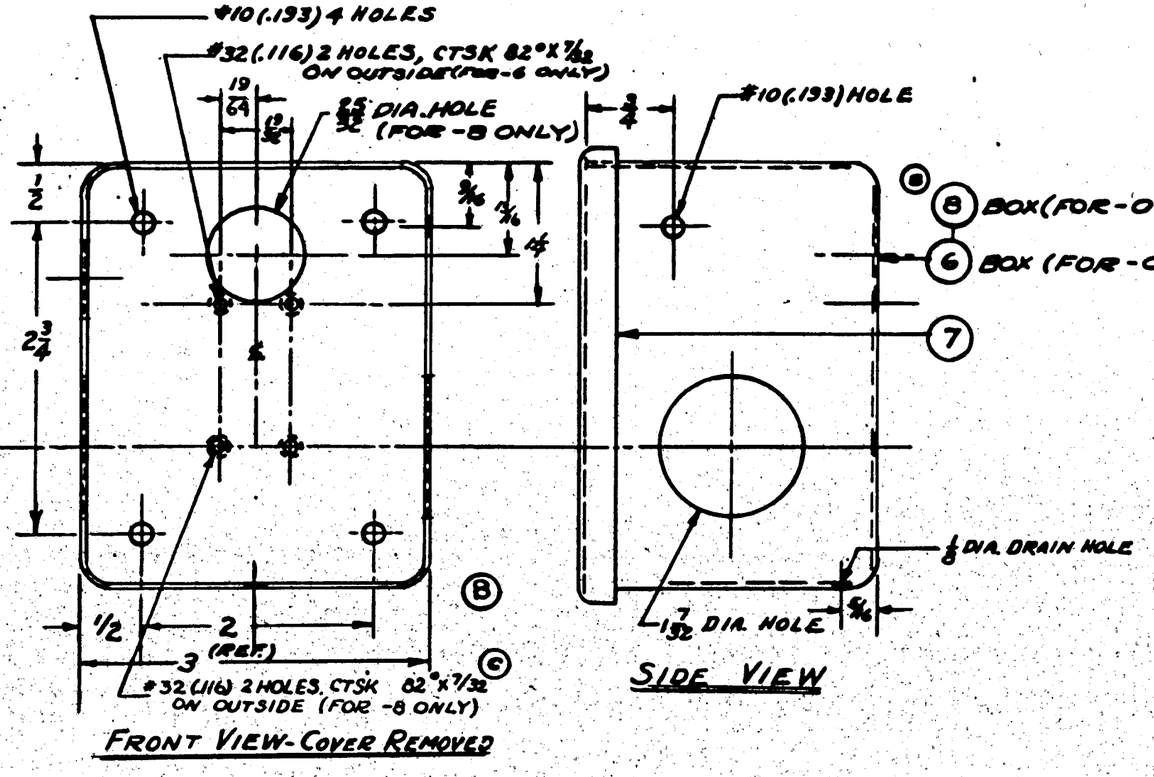

FRONT VIEW-COVER REMOVED

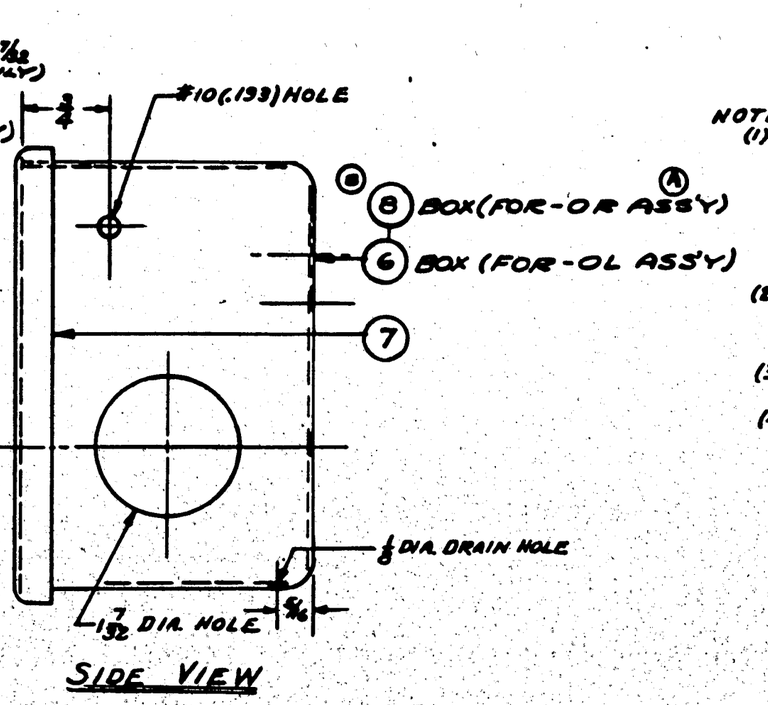

SIDE VIEW

NOTES:
(1) BOX & COVER MAY BE PURCHASED FROM MONARCH TOOL & INSTR. CO. SPECIFYING:
1006R-216 BOX
MT-CSD1006 COVER
OR FROM POULSEN & NARDON CO., SPECIFYING:
1095-216 N BOX
1095-350 COVER

(2) BOX TO BE FURNISHED WITH TIGHT FITTING COVER, NON-LOSEABLE STEEL SCREWS & DURAL WASHERS

(3) FINISH: P-INSIDE; P-AP OUTSIDE.

(4) REMOVE FINISH 3/32 RADIALLY AROUND 21/32 & 25/32 DIA. HOLES.

FINISH CODE	
Z	ANODIC TREATMENT
P	P-27 PRIMER
AP	ALUMINIZED PRIMER
C	CADMIUM PLATE

NOTE: PARTS FURNISHED BY BREWSTER

C-88476-53 (ON)
C-91876 SH ON

ASSY. DASH No.	MODEL	NEXT ASSY.	QTY.
R	PBY-5A	28E6085	1
L	PBY-5A		1
R	PBY-5		1
L	PBY-5		1
R	28-5A MIB		1
L	28-5A MIB		1
R	PBY-5B	28E6085	1
L	PBY-5B	28E6085	1

REQUIREMENTS PER AIRPLANE

REPLACES — CALC. WT.

REPLACED BY — ACT. WT.

SCALE 12"-1'0" 1/32

STAMP PART NUMBER WHERE SHOWN

PART NO.	STOCK	MATERIAL	SPEC.	LH REQ. -0	RH REQ. -2	LH REQ. -3	RH REQ. -4	LH REQ. -5	RH REQ.
-8	BOX	C.A.C. BOX No. 22-2 N							
-7	COVER								
-6	BOX								

PARTS LIST PER ASSY.

AC — NAVY NONE — HEAT TREAT

NOTED — FINISH

7/30/41 DRAFT — CHECK — STRUCT — MAT — APPROV — ENG.

NAME BOX - ELEC., FORMATION LIGHT JUNCTION

CONSOLIDATED AIRCRAFT CORP. SAN DIEGO, CALIF.

OPP. HAND 28E6084-R

SIZE D — 28E6084

R

LET.	ALTERATION	DATE	BY
A	ADDED 28E6335 & 28E6336 TO CHG NOTE "SHELLAC 28E6335 ---WITH SHELLAC" REQ. WT. CHG.	6-4-42	EMR
B	IN REQ BLOCK NOTE "CONTR. 91876 "91-260" WAS "91 & ON". NOTE "CONTR. 88476 "53 -146" WAS "53 & ON." NO WT. CHG.	10/15/42	
C	ADDED 28E5839-6, -7, -8 FOR PBY-5 & PBY-5A. ADDED NOTES 2, 3 & 4. WT. CHG. REQ.	1-19-43	

E.O. A41739

E.O. A62322

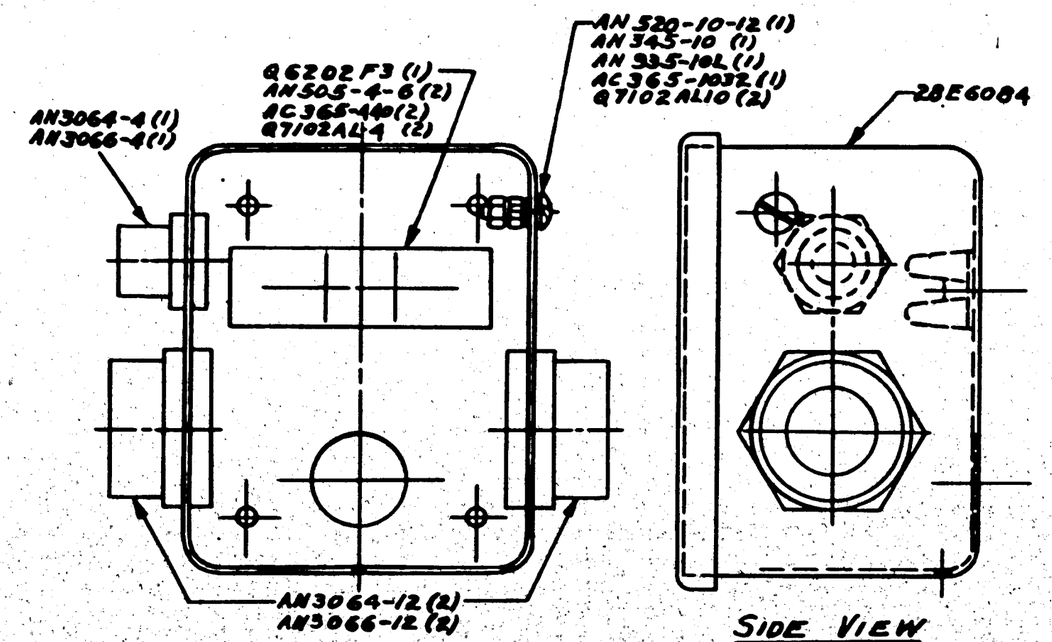

FRONT VIEW
COVER REMOVED

SIDE VIEW

NOTE: PARTS FURNISHED BY BREWSTER

	ASSY. DASH NO.	MODEL	NEXT ASSY.	REQ.
-R	28-5AN	28E6021		1
-L	28-5AN	28E6021		1
-R	PBY-5	28E6021		1
-L	PBY-5	28E6021		1
-R	PBY-5A	28E6021		1
-L	PBY-5A	28E6021		1
-R	PBY-3S	28E6021		1
-L	PBY-3S	28E6021		1

CONTR. 91876 "91 - 340" }
CONTR. 88476 "53 - "146. }
NOT USED ON E.O. 62322 }

REQUIREMENTS PER AIRPLANE

REPLACES — GALS. WT.

REPLACED BY — ASSY. WT.

SCALE 12"=1'-6"

1/32

STAMP PART NUMBER WHERE SHOWN

PART No.	STOCK	MATERIAL	SPEC.	LH REQ. -0	RH REQ. -0	LH REQ. -2	RH REQ. -2	LH REQ. -3	RH REQ. -3	LH REQ. -4	RH REQ. -4	LH REQ. -5	RH REQ. -5
28E5839-8				1	1								
28E5839-7				1	1								
28E5839-6				1	1								
28E6336					1								
28E6335				1									
AN3066-12				2	2								
AN3066-4				1	1								
AN3064-12				2	2								
AN3064-4				1	1								
Q7102AL10				2	2								
Q7102AL4				2	2								
Q6202F3				1	1								
AN335-10L				1	1								
AN520-10-12				1	1								
AN505-4-6				2	2								
AC365-1032				1	1								
AN345-10				1	1								
AC365-440				2	2								
28E6084R					1								
28E6084L				1									
-0													

PARTS LIST PER ASSY.

AC — NAVY NONE — NONE — HEAT TREAT — FINISH

12-2-41 — DRAFT: HALL-MAN — CHECK: SHUPE-ZONER — STRUCT: GREEN — MAT: L.R.P. — APPROV: KLEIN — ENG: MC CABE — 1-19-43 WELD

NAME: BOX ASSY. - ELEC. FORMATION LIGHT. JUNCTION

OPP. HAND 28E6085-R

CONSOLIDATED AIRCRAFT CORP. SAN DIEGO, CALIF.

DWG. SIZE D — 28E6085

R

NOTE:-

1. SHELLAC 28E6335 & 28E6336 TO INSIDE OF COVERS 28E6084 L&R RESPECTIVELY & COVER OVER WITH SHELLAC
2. © SHELLAC 28E5839-6 TO INSIDE OF COVERS 2856084-R FOR PBY-5 & PBY-5A.
3. SHELLAC 28E5839-7 TO INSIDE OF COVER 28E6084-L FOR PBY-5 ONLY.
4. © SHELLAC 28E5839-8 TO 28E6084-L FOR PBY-5A.

BREWSTER #597

LET	ALTERATION	DATE	BY
A	AC366-DF1032 WAS AC366-F1032	10-23-42	[illegible]

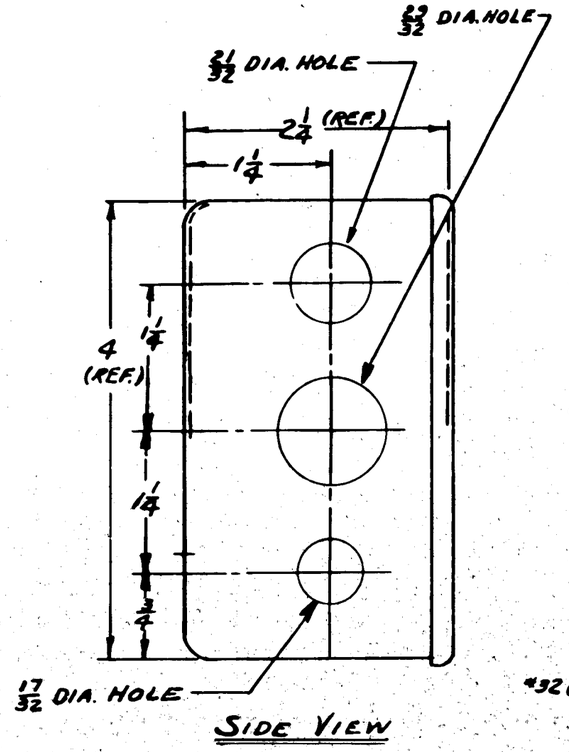

SIDE VIEW

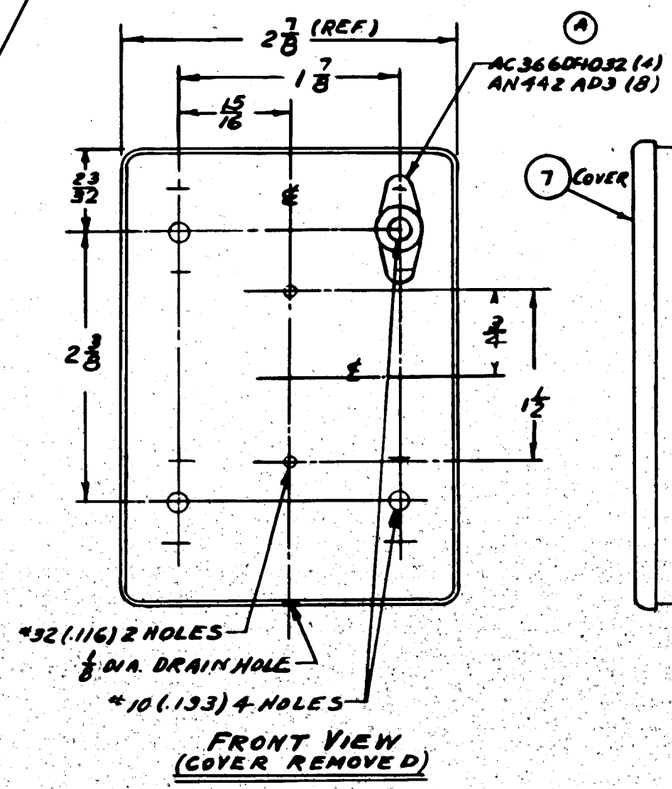

FRONT VIEW
(COVER REMOVED)

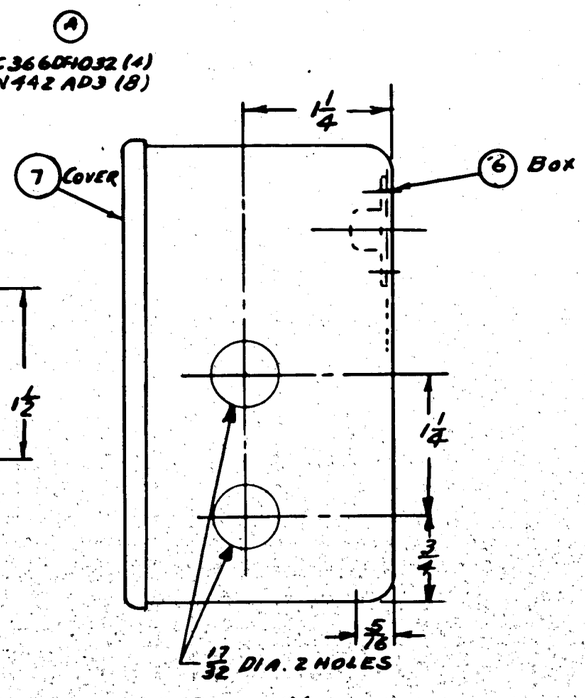

SIDE VIEW

NOTES:
(1) BOX & COVER MAY BE PURCHASED FROM MONARCH TOOL & INSTR. CO. SPECIFYING:
1005R-208 BOX
MT-CSD 1005 COVER
OR FROM POULSEN & HARDON CO. SPECIFYING:
1125-208N BOX
1125-3SD COVER
(2) BOX TO BE FURNISHED WITH TIGHT FITTING COVER, NON-LOSEABLE STEEL SCREWS & DURAL WASHERS.
(3) REMOVE FINISH 3/32 RADIALLY AROUND CONO HOLES.
(4) FINISH: P-INSIDE; PAP OUTSIDE

FINISH CODE	
Z	ANODIC TREATMENT
P	P-27 PRIMER
AP	ALUMINIZED PRIMER
C	CADMIUM PLATE

PARTS FURNISHED BY BREWSTER

PART No.	STOCK	MATERIAL	SPEC.	LH REQ. -0	RH REQ. -2	LH REQ. -3	RH REQ. -4	LH REQ. -5	RH
AN442AD3				—					
AC366DF1032				4					
-7	COVER } C.A.C. BOX No. 28-208N			1					
-6	BOX }			1					

PARTS LIST PER ASSY.

ASSY. DASH NO.	MODEL	NEXT ASSY.	REQ.
0	PBY-5A	28E6088	1
0	PBY-5	28E6088	1
0	PBY-5A	28E6088	1
0	PBY-5B	28E6088	1

REQUIREMENTS PER AIRPLANE

C-#77713
C-#91876
C-#88476

REPLACES — CALC. WT.
REPLACED BY — ACT. WT.
UNLESS OTHERWISE SPECIFIED ± 1/32 — SCALE 12" = 1'0"
STAMP PART NUMBER WHERE SHOWN

AC — 11/6/42
NAVY NONE — NOTED
HEAT TREAT — FINISH
DRAFT — CHECK — STRUCT — MAT — APPROV — ENG

NAME BOX-ELEC. RECOGNITION LIGHT JUNC.
CONSOLIDATED AIRCRAFT CORP. SAN DIEGO, CALIF.
OPP. HAND NONE
DWG. SIZE D
28E6087

R

LET	ALTERATION	DATE	BY
A	ADDED 28E6345 & NOTE "SHELLAC---SHELLAC" NEG WT. CHG.	6-4-42	ROGERS
B	AN3066-4 (1) WAS AN3064-4 (1) ON FACE. NO WT. CHG.	6-29-43	ARTHUR
C	CHG'D. NOTE WAS "SHELLAC 28E6345 TO INSIDE OF COVER 28E6087 (COVER OVER WITH SHELLAC." TO "APPLY--- SHELLAC." WT. CHG. NEG	1-29-43	GRIMM

EO# 41758

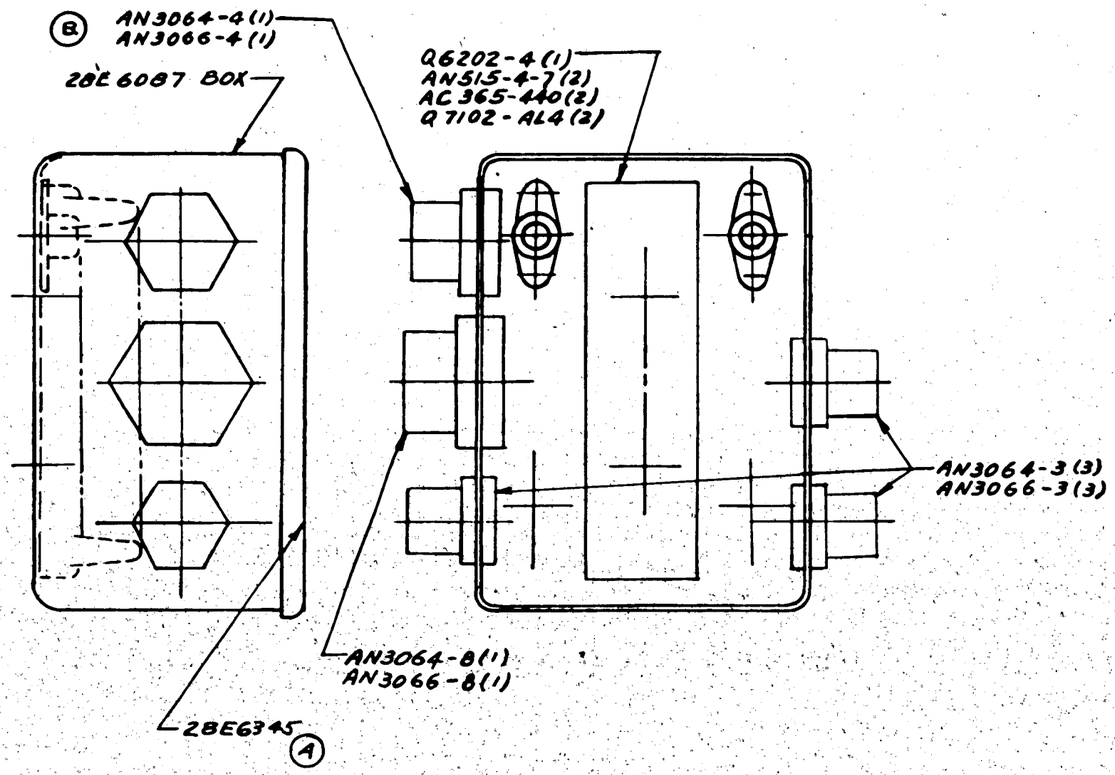

(A) NOTE:

(C) APPLY 28E6345 TO INSIDE OF COVER 28E6087. IF BLUE PRINT CUT OUT IS USED APPLY WITH ℄ COVER OVER WITH SHELLAC.

PARTS FURNISHED BY BREWSTER

ASSY. DASH NO.	MODEL	NEXT ASSY.	QTY.	PART NO.	STOCK	MATERIAL	SPEC.	LH REQ. -0	RH REQ. -0	LH REQ. -2	RH REQ. -2	LH REQ. -3	RH REQ. -3	LH REQ. -4	RH REQ. -4	LH REQ. -5	RH REQ. -5
				AN3066-8				1									
				AN3066-4				1									
				AN3066-3				3									
				AN3064-8				1									
				AN3064-4				1									
	PBY-5	28E6089	1	AN3064-3				3									
	PBY-5A	28E6089	1														
	PBY-5A	28E6089	1														
	PBY-5A	28E6089	1														
	PBY-5A	28E6089	1	Q7102AL-4				2									
				Q6202-4				1									
				AN515-4-7				2									
				AC365-440				2									
				28E6345				1									
				28E6087 (A)				1									

REQUIREMENTS PER AIRPLANE

REPLACES — GALS. WT.

REPLACED BY — ASY. WT.

SCALE 12"=1'0"

1/32

STAMP PART NUMBER WHERE SHOWN

PARTS LIST PER ASSY.

AC			11/4/42	
NAVY —	—		MALLORY 11-16-42	
HEAT TREAT	FINISH	DRAFT	CHECK	STRUCT	MAT	APPROV	ENG

NAME BOX ASSEM.-ELEC. \ RECOGNITION LIGHT JUNC.

OPP. HAND NONE

CONSOLIDATED AIRCRAFT CORP. SAN DIEGO, CALIF.

DWG. SIZE D

28E6088

C-91876
C-77713
C-88476

R

LET	ALTERATION	DATE	BY
A	ASSIGNED -6 TO BRACKET	[illegible]	[illegible]
B	ADDED R 1/8 TO SCALE BLOCK ADDED -6 CALLOUT TO FACE	[illegible]	[illegible]

EDC# 52523

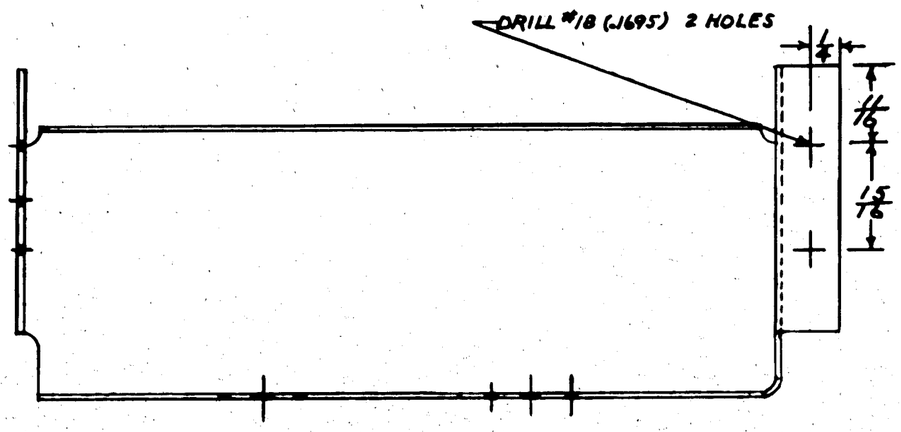

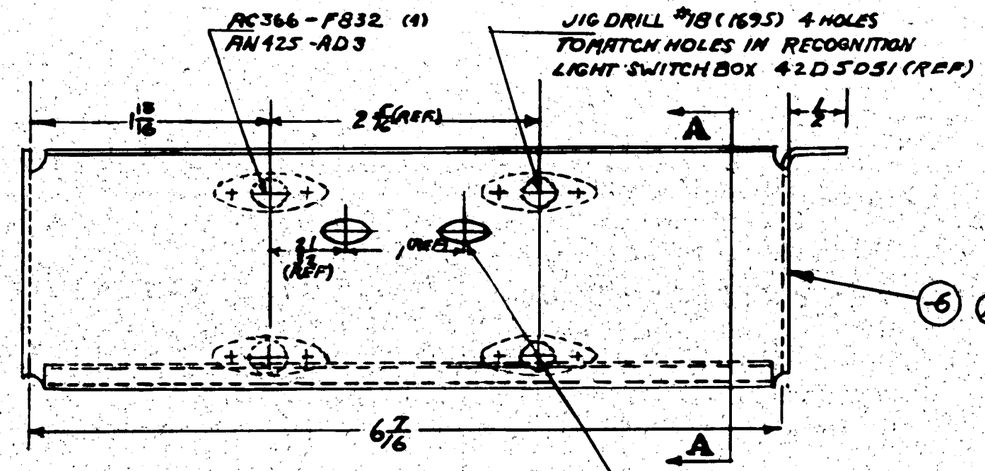

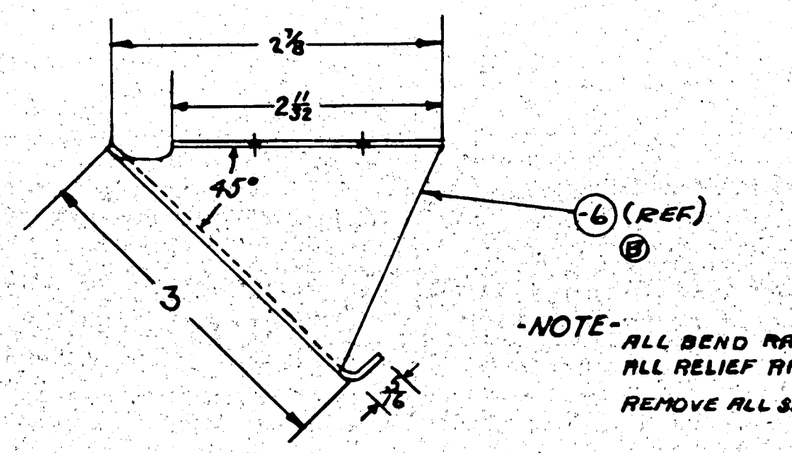

-NOTE-
ALL BEND RADII 1/8
ALL RELIEF RADII 1/8
REMOVE ALL SHARP CORNERS.

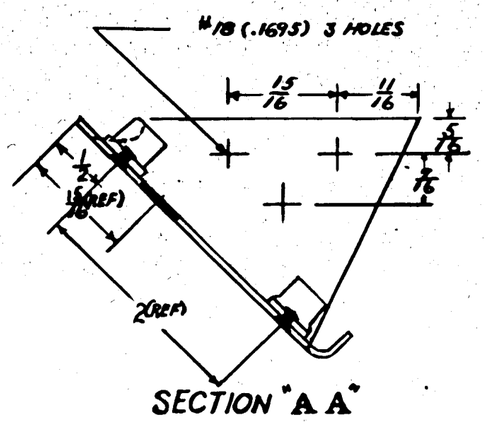

SECTION "A A"

FINISH CODE	
Z	ANODIC TREATMENT
P	P-D-J PRIMER
AP	ALUMINIZED PRIMER
C	CADMIUM PLATE

Contract #7719
Contract #8847
Contract #9187

ASSY. DASH NO.	MODEL	NEXT ASSY.	REQ'D
	PBY-5A	28C004	1
	PBY-5A	28C004	1
	PBY-5	28C004	1
	PBY-5B	28C004	1

REQUIREMENTS PER AIRPLANE

REPLACES — CALC. WT.

REPLACED BY — ACT. WT.

LIMIT OR DIMENSIONS UNLESS OTHERWISE SPECIFIED + − — SCALE 12"=1'-0"

STAMP PART NUMBER WHERE SHOWN

PART NO.	STOCK	MATERIAL	SPEC.		LH REQ.	RH REQ.	LH REQ.	RH REQ.	LH REQ.	RH REQ.	LH REQ.	RH REQ.	LH REQ.	RH REQ.
					-0		-2		-3		-4		-5	
	RN425 AD3			-										
	AC366-F832			4										
-6	.051 x 3 1/4 x 11 1/2	ALCLAD 2450	47A8 COND A	1										

PARTS LIST PER ASSY.

A.C.		DRAWN	[illegible]	[illegible]	[illegible]			
NAVY SR53	Z-P-AP	1-25-43	2-13-43					
HEAT TREAT	FINISH	DRAFT	CHECK	STRUCT	MAT	APPROV	ENG	

NAME SUPPORT-ELEC. — RECOGNITION LIGHT SWITCH BOX

OPP. HAND —

CONSOLIDATED AIRCRAFT CORP. SAN DIEGO, CALIF.

DWG. SIZE D — 28E6135

PART MADE FOR PBY-5B #1

R

LET	ALTERATION	DATE	BY
	E.O. A45536		
A	ADDED -2. WT. CHG. NEG.	9-4-42	[illegible]
B	WALL THICKNESS OF .04 2 CRES. OSI TP. C4S1 WT. .75 WAS .65	9-22-42	[illegible]
	E.O. A64088 C.A.C. #101-6		
C	ADDED -3 PART. REMOVED 1 1/16 Dim. 2 1/16 WAS 1 1/16 & 1 1/16. ADDED "REMOVE FOR -3 ONLY." (3 HOLES)		
	ADDED (6 HOLES - 3), (7 HOLES - 2) (WT. CHG. NOS.)	10-22-42	[illegible]
D	1 1/16 DIA. 2 1/16 O.D. (3 PLACES) WAS 2 1/16 O.D. (WT. CHG. NOS.)	10-31-42	[illegible]
E	CREATED -4 ASSY. REVISED REQ/AIRPLANE BLOCK. WT. CHG. NEG.	2-5-43	MOE
F	ON FACE ADDED 11/32 DIA. HOLE @ 1 1/2		
	DIM. FOR -4 PBY-5A ONLY (NO WT. CHG.)	6-5-43	[illegible]

E.O. [illegible] MCR. 211

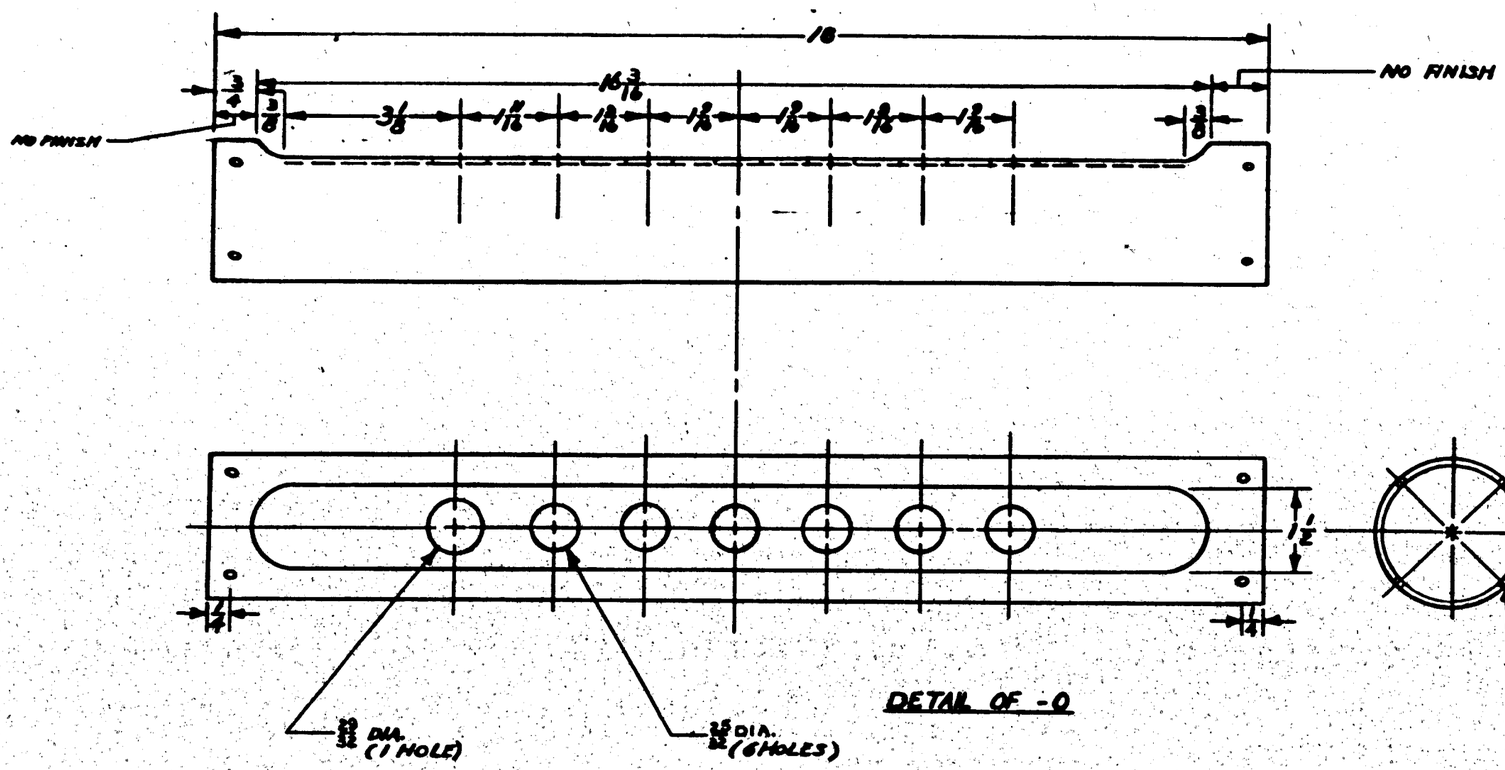

DETAIL OF -0

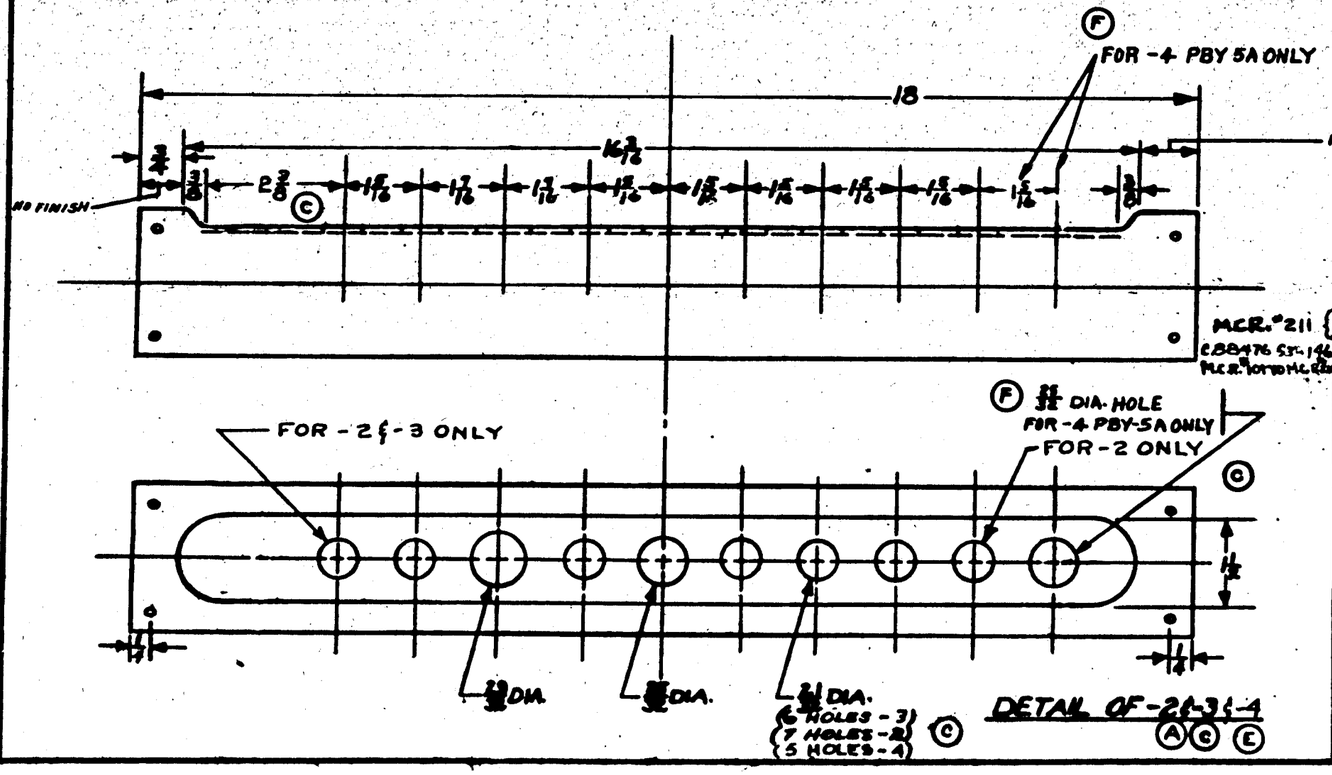

DETAIL OF -2 & -3 & -4

A C E

PART MADE FOR PBY-5B #1.

NOTE:
FOR TOOLING SEE 28E5038-6 (REF)
FINISH P OUTSIDE ONLY AS NOTED.

FINISH CODE	
Z	ANODIC TREATMENT
P	P-27 PRIMER
AP	ALUMINIZED PRIMER
C	CADMIUM PLATE

-4	PBY-5A	28E6171	1
-4	PBY-5	28E6171	1
-2	PBY-5A	28E6171	1
-3	PBY-5	28E6171	1
-0	PBY-5B	28E6171	1
ASSY. DASH NO.	MODEL	NEXT ASSY.	REQ.

REQUIREMENTS PER AIRPLANE

REPLACED	.70 CALC. WT.	
REPLACED BY	ACT. WT.	
LIMIT OF ENGINEERING TOLERANCE UNLESS OTHERWISE SPECIFIED ± 1/32	SCALE 6" = 1'-0"	

STAMP PART NUMBER WHERE SHOWN

PART NO.	STOCK	MATERIAL	SPEC.	LH REQ.	RH REQ.	LH REQ.	RH REQ.	LH REQ.	RH REQ.	LH REQ.	RH REQ.
						-3	-4	-5			
-4	2 1/2 O.D. x .049 x 18 7/8	AL. TUBE	24T19½H								
-3	2 1/2 O.D. x .049 x 18 7/8	AL. TUBE	24T19½H								
-2	2 1/2 O.D. x .049 x 18 7/8	AL. TUBE	24T19½H								
-0	2 1/2 O.D. x .049 x 18 7/8	AL. TUBE	24T19½H								

PARTS LIST PER ASSY.

A C	—	—	2-9-42	W.W.S.	GERBER	D.B.A.	PACIN.	H.S. CABB.
NAVY NONE	NOTED	D. JAMES	PAUL-PALMER	WALL-STRAP			WOLD
HEAT TREAT	FINISH	DRAFT	CHECK	STRUCT	MAT	APPROV	ENG.

OPP. HAND —

NAME TUBE - ELEC. INSTRUMENT PANEL JUNCTION

CONSOLIDATED AIRCRAFT CORP. SAN DIEGO, CALIF.

SIZE D — 28E6169

R

LET	ALTERATION	DATE	BY
	I.O. A-18778		
A	L.H. TACH (WAS RH GYRO)		
	FLOAT SIG (WAS L.H. TACH)		
	RH GYRO (WAS FLOAT SIG)		
	NO WT. CHG.	6-4-42	E.M.P.
B	E.O. A-13537 E.O. A-52267 CREATED - 2 ASS'Y, WT. 1.66#	7-2-42	
C	REMOVED STENCILING "L.H. CONN." "R.H. CONN." FROM - 2 ASSY (NO WT. CHG.)	8-6-42	STONE
D	IN -2 ASSY AN3066-4 (2) WAS AN3064-4 (2) NO WT. CHG.	1-8-43	
E	IN -2 ASSY AN3064-4 (7) WAS AN3064-4 (2) AN3066-4 (5) AN3066-4 (7) WAS AN3066-4 (5). 28E6169-2 (1) IN -2 ASSY WAS 28E6169-2 (2). CREATED -3 ASSY. WT -3 ASSY 1.66#	1-21-43	
F	ADDED #50 (.070) ONE HOLE @ LOCATING DIM. 5/16, WT. CHG. NEG.	1-21-43	
G	IN -2 & -3 ASSYS OP B/M AN3064-8 (1 WAS 2), AN3066-8 (1 WAS 2), AN3066-6 (1 WAS 7) & AN3064-6 (1 WAS 7) NO WT. CHG.	1-21-43	
H	B.O. B 0372 MCR. 211-1 CREATED - 4 ASS'Y. WT. - 4 ASS'Y. 1.66#	5-4-43	WINTER
J	ON -4 ASS'Y REMOVED AN520 -10-12 (1), AN345-10 (1), AN935 -10 (1), AC 365-1032 (1), Q7102 -AL10 (2) & 28E6170-700 (1). ADDED 28E6170-6 (1). WT. CHG. NEG.	6-9-43	WERRLI
K	FOR -4 ASS'Y PBY-5A ONLY. AN3064-6 (2) WAS (1) & AN 3066-6 (2) WAS (1) WT. CHG. NEG.	6-5-43	WERRLI
L	ADDED STENCIL MARKINGS WT. CHG. NEG.	6-22-43	DARRIN

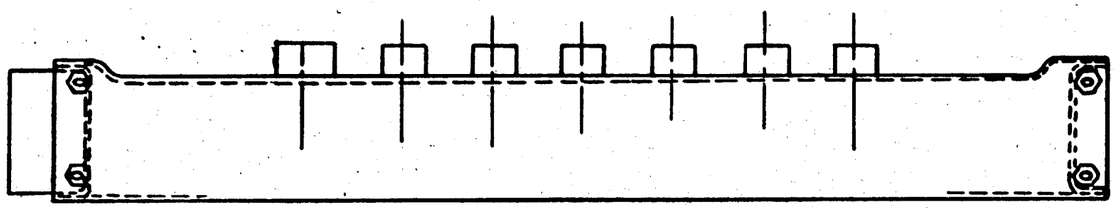

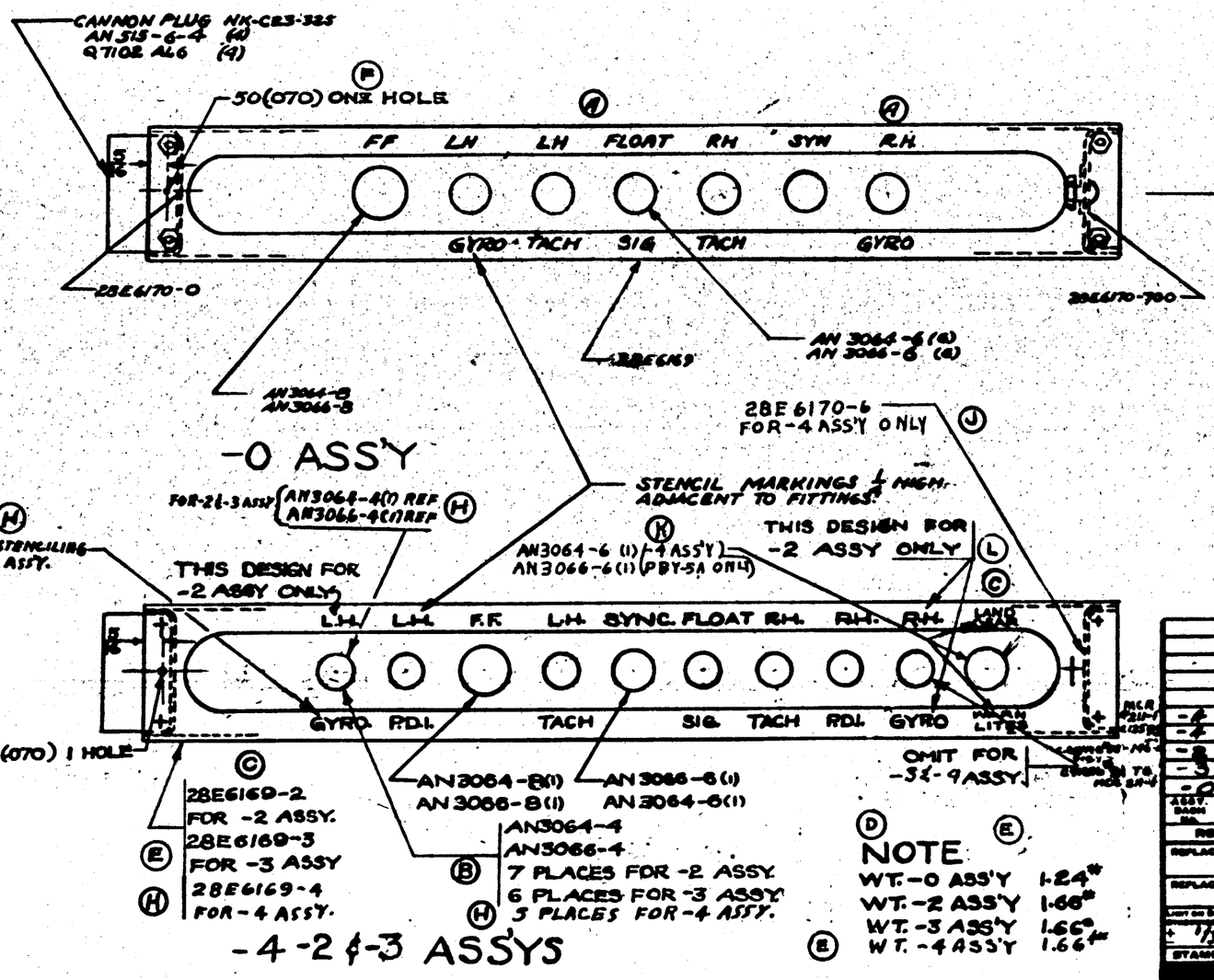

PART No.	STOCK	MATERIAL	SPEC.	-0 LH	-0 RH	-2 LH	-2 RH	-3 LH	-3 RH	-4 LH	-4 RH	-5 LH	-5 RH
				REQ.	REQ.	REQ.	REQ.	REQ.	REQ.	REQ.	REQ.	REQ.	REQ.
28E6170-6												1	
28E6169-4													1
28E6169-3								1					
28E6169-2						1							
AN3066-4						7		6		5			
AN3064-4						7		6		5			
AN345-6-4				4		4		4		4			
AC365-1032				9		9		9		8			
AN3066-8				1		1		1		1			
AN3066-6			(FOR -4 ASS'Y, PBY-5A ONLY (2 REQ.))	6		1		1		1			
AN3064-8				1		1		1		1			
AN3064-6			(FOR -4 ASS'Y, PBY5A ONLY (2 REQ.))	6		1		1		1			
AN935-10				1		1		1		1			
AN520-10-5				8		8		8		8			
AN520-10-12				1		1		1		1			
AN345-10				1		1		1		1			
Q7102-AL6				4		4		4		4			
Q7102-AL10				2		2		2		2			
CANNON	PLUG NK-CB3-32S			1		1		1		1			
28E6170-0				1		1		1					
28E6170-700				1		1		1					
28E6169				1									

PARTS LIST PER ASSY.

-4	PBY-5	28E6172	1
-4	PBY-5A	28E6172	1
-2	PBY-5A	28E6172	1
-3	PBY-5	28E6172	1
-0	PBY-5A	28E6172	1

ASS'Y DASH No.	MODEL	NEXT ASSY.	QTY.

REQUIREMENTS PER AIRPLANE

REPLACES	NOTE® Equiv. Wt.
REPLACED BY	Assy. Wt.

UNLESS OTHERWISE SPECIFIED DIMENSIONS ARE ± 1/32 — SCALE 6" = 1'-0"

STAMP PART NUMBER WHERE SHOWN

AC —	—	5-4-43						
NAVY NONE	Z-P-AP.	DRAWING RELEASED						
HEAT TREAT	FINISH	DRAFT	CHECK	STRUCT	MAT	APPROV	ENG.	

NAME MANIFOLD ASSEMBLY - ELEC. INSTRUMENT PANEL

OPP. HAND —

CONSOLIDATED AIRCRAFT CORP. SAN DIEGO, CALIF.

SIZE D — 28E6171

R

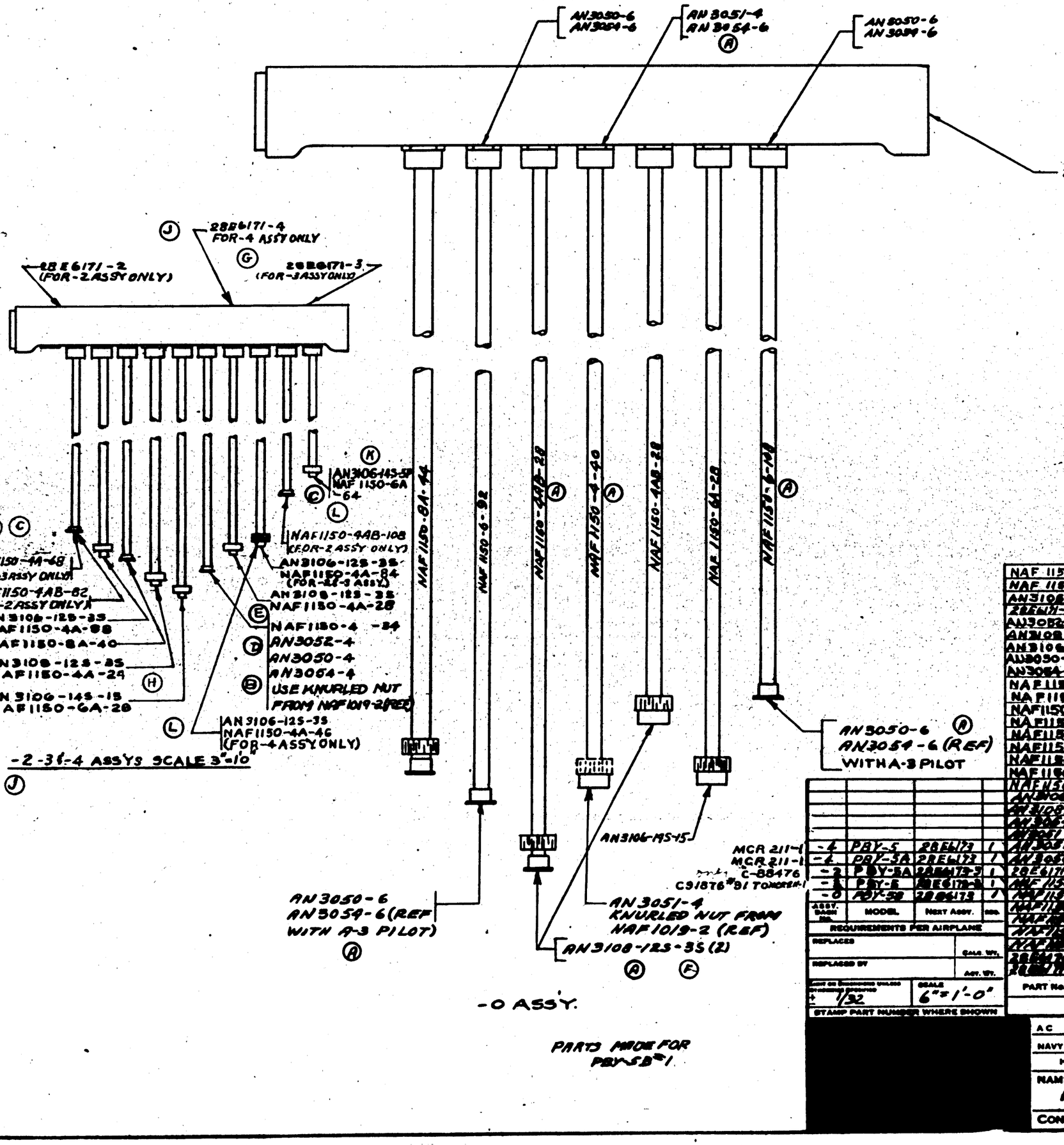

-2-3-4 ASSYS SCALE 3"=1'0

(J)

-0 ASS'Y.

PARTS MADE FOR PBY-5B #1

LET	ALTERATION	DATE	BY
A	CHARACTER SIZES & LENGTHS OF CONDUIT ADDED CORRECT BUSHES ON FACE OF DRWG & WAS NAF1150-4AB-28 WAS ABOVE 6-10B. NAF1150-4-40 WAS NAF 1150-4AB-88. NAF 1150-6-10B WAS NAF 1150-4-42 REMOVED FROM FACE OF DRWG. & P/N AN3106-12S-3S (2) ADDED AN3108-12S-3P (2)		
B	E.O. A41582-A CREATED -2 ASSY ON FACE OF DWG & P/N WT. ADDED 2.83	7-2-42	
C	E.O. AS2266 REMOVED AN3106-12S-3S(2) NAF 1150-4A-34(0) & NAF 1150-4A-24(0). WT. CHG. -.128	8-6-42	
D	E.O. A51949 NAF 1150-4-34 WAS NAF 1150-4A-42. ADDED AN3052-4 (1) AN3054-4(1), AN3054-4 (1) & NOTE "USE KNURLED NUT FROM NAF1019-2(REF)" NEG. WT. CHG.	8-6-42	
E	E.O. A48635 IN-2 ASSY. NAF1150-4A-22(1) WAS (2) ADDED NAF1150-4A-28(1). WT. CHG. NEG.	8-21-42	
F	E.O. A56066 AN3108-12S-3S(2) WAS AN3108-12S-8P(2) FOR -0 ASSY. NO WT. CHG.	10-14-42	
G	E.O. A64108 CREATED -3 ASSY. NEW WT CHG.	10-14-42	
H	E.O. A94589 NAF1150-4A-24 WAS NAF 1150-4A-22. WT CHG NEG	1-19-43	MOE
J	E.O. B0373 CREATED -4 ASSY. WT CHG NEG.	6-12-43	WATER
K	ADDED AN3108-14S-5P NAF1150-6A-64 & NOTE "FLEX LENGTH TO BE DETERMINED BY SHOP" WT CHG NEG	6-25-43	
L	-4 ASSY. NAF1150-6A-64 WAS -6A (NOTE 50); NAF1150-4A-46 WAS -8A & REMOVED NOTE. WT. CHG. NEG.	7-2-43	

PART No.	STOCK	MATERIAL	SPEC.	LH REQ. -0	RH REQ. -0	LH REQ. -2	RH REQ. -2	LH REQ. -3	RH REQ. -3	LH REQ. -4	RH REQ. -4
NAF 1150-4A-46										1	1
NAF 1150-6A-64										1	1
AN3106-14S-5P										1	1
28E6174-4										1	1
AN3052-4						1	1			1	1
AN3108-12S-3S						2	2			2	2
AN3106-12S-3S						2	2			2	2
AN3050-4						1	1			1	1
AN3054-4						1	1			1	1
NAF1150-4AB-10B						1	1			1	1
NAF1150-4A-8A						1	1			1	1
NAF1150-8A-28						1	1			1	1
NAF1150-4A-24						1	1			1	1
NAF1150-8A-40						1	1			1	1
NAF1150-4A-88						1	1			1	1
NAF1150-4AB-82						1	1			1	1
NAF1150-8 -34								1	1		
NAF1150-4A-68								1	1		
AN3106-14S-1S								1	1		
AN3106-12S-3S								1	1		
AN3054-6								1	1		
AN3051-4								1	1		
AN3050-6								1	1		
28E6174-3								1	1		
NAF 1150-8A-44								1	1		
NAF1150-4A-28						1	1				
NAF1150-4-92								1	1		
NAF1150-4-40								1	1		
NAF1150-4-42								1	1		
NAF1150-4AB-28								1	1		
28E6174-2								1	1		
28E6174								1	1		

PARTS LIST PER ASSY.

ASSY. DASH No.	MODEL	NEXT ASSY.	QUAN.
-4	PBY-5	28E6173	1
-4	PBY-5A	28E6173	1
-3	PBY-5A	28E6173-3	1
-3	PBY-5	28E6173-3	1
-0	PBY-5B	28E6173	1

REQUIREMENTS PER AIRPLANE

REPLACES — QUAL. WT.

REPLACED BY — ASY. WT.

UNLESS OTHERWISE SPECIFIED ± 1/32 — SCALE 6"=1'-0"

STAMP PART NUMBER WHERE SHOWN

MCR 211-1
MCR 211-1
C-88476
C9187 6-8-43 TO 28E6172-1

AC	—	—	2-12-42
NAVY NONE	—	—	1/4/43
HEAT TREAT	FINISH		DRAFT

CHECK — STRUCT — MAT — APPROV — DES

NAME CONDUIT ASSEMBLY - ELEC. INSTRUMENT PANEL MANIFOLD

OPP. HAND —

CONSOLIDATED AIRCRAFT CORP. San Diego, Calif.

SIZE D — 28E6172

R.

28E6172

LET	ALTERATION	DATE	BY
A	CHG IN NOTE #1 P&N #1043-		
	208 WAS #1044-208 N &	7/10/42	BLANC
	P&N #1043-1 WAS #1043-35D		
B	IN NOTE #1 - P&N 1043-208N (BOX)		
	WAS 1043-208; P&N 1043-35D		
	(COVER) WAS 1043-1. WT. CHG. NEG.	8-28-42	FUNK

E.O. A53889

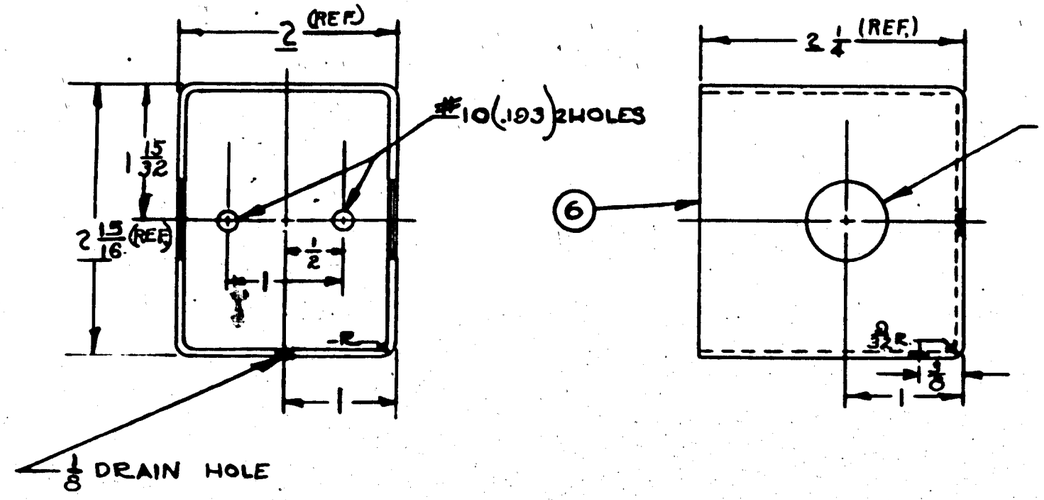

NOTES:
1. BOX & COVER MAY BE PURCHASED FROM POULSEN & NARDON. SPECIFY: (A) P&N 1043-208N BOX. (B) P&N 1043-35D COVER. OR EQUIVALENT.
2. FINISH P-INSIDE P-AD. OUTSIDE. REMOVE FINISH 3/32 RADIALLY AROUND CONDUIT HOLES.
3. BOX TO BE FURNISHED WITH TIGHT FITTING COVER, NON-LOSEABLE STEEL SCREWS & ALUM. WASHERS.

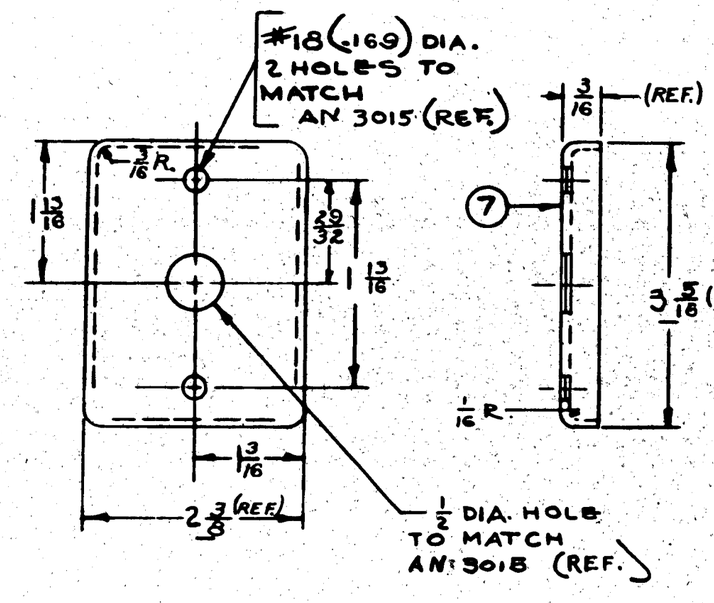

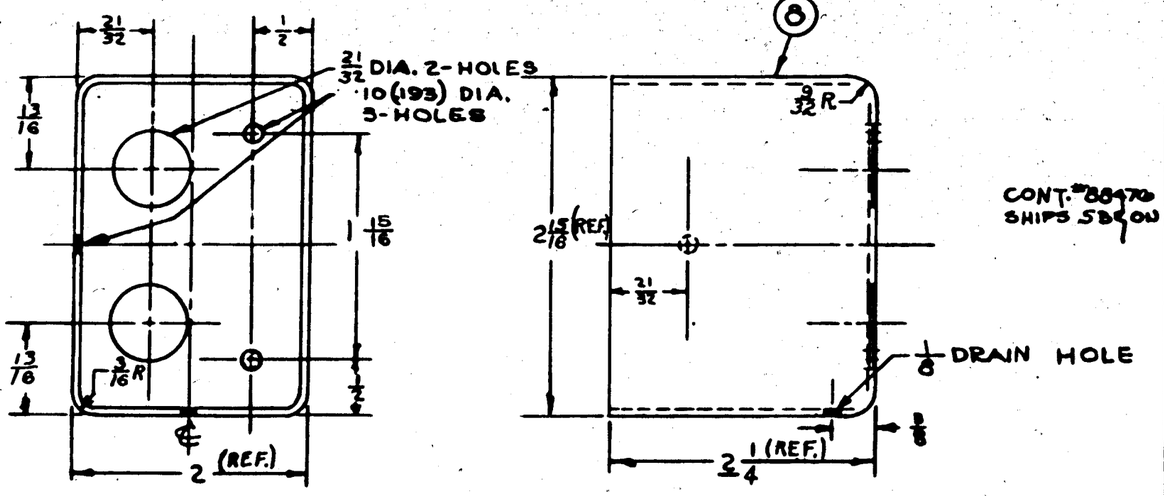

CONT. #88470 SHIPS SEPARATELY

ASSY. SHOW No.	MODEL	NEXT ASSY.	REQ.
-8	PBY5A	[illegible]	1
-7	PBY5A	[illegible]	1
-7	PBY5A	[illegible]	1
-6	PBY5A	[illegible]	1

REQUIREMENTS PER AIRPLANE

REPLACES — CALC. WT. 187

REPLACED BY — ACT. WT.

SCALE 12" = 1'-0"

STAMP PART NUMBER WHERE SHOWN

-8 CAC Box 14-208 & COVER
-7
-6

PART No.	STOCK	MATERIAL	SPEC.	LH REQ.	RH REQ.	LH REQ.	RH REQ.	LH REQ.	RH REQ.	LH REQ.	RH REQ.	LH REQ.	RH REQ.
PARTS LIST PER ASSY.				-0		-2		-3		-4		-5	

AC		3-23-42	MOORE	GUBER	CUSTER		ZUCK
NAVY NONE	NOTED	LANG	PAULSEN		EJM		FRICKER
HEAT TREAT	FINISH	DRAFT	CHECK	STRUCT	MAT	APPROV	ENG.

NAME BOX-ELEC.-STEWART WARNER HEATER SW.

OPP. HAND

CONSOLIDATED AIRCRAFT CORP. SAN DIEGO, CALIF.

DWG. SIZE D — 28E6270

LET	ALTERATION	DATE	BY

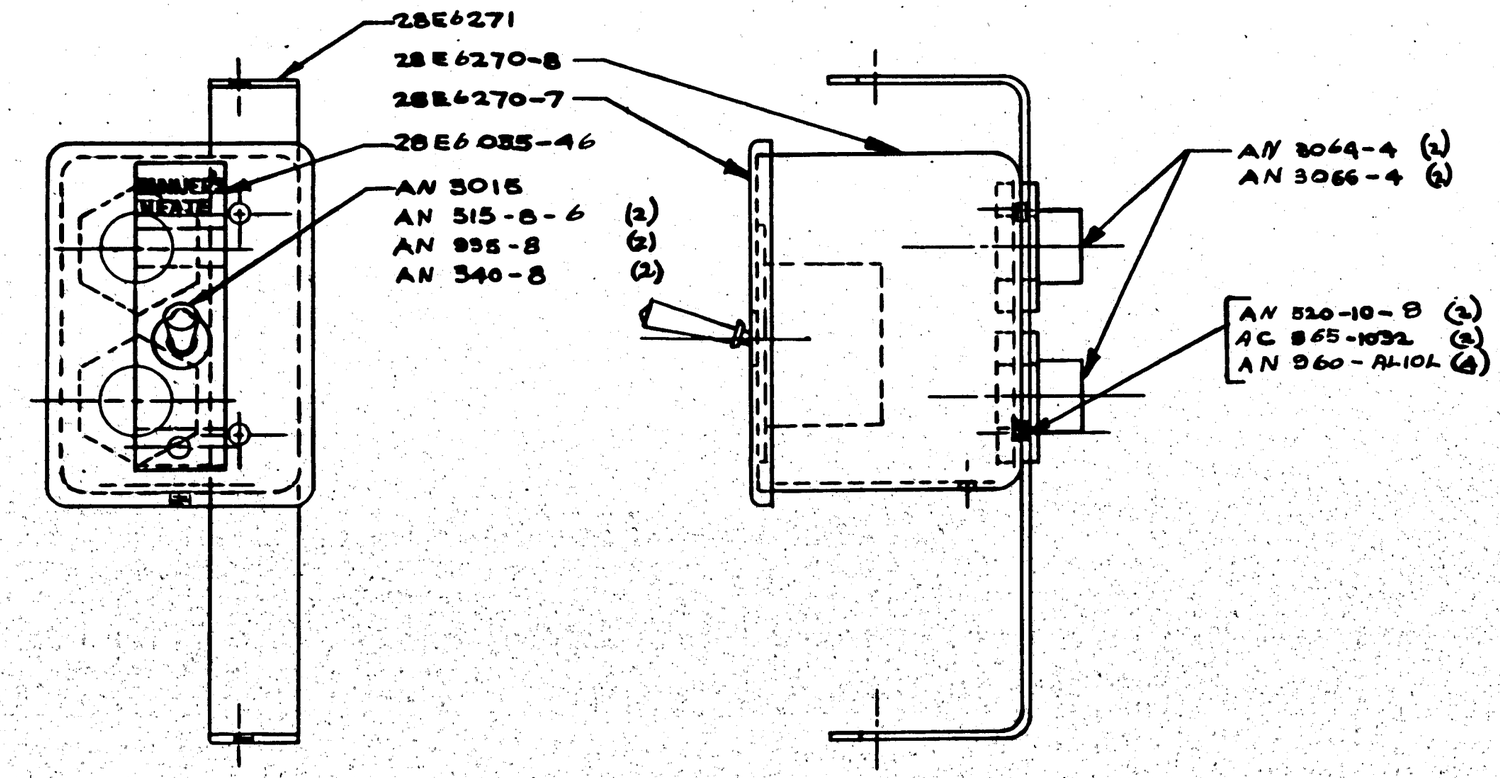

CONT. BB476 SHIPS 53 & ON

ASSY. SALES NO.	MODEL	NEXT ASSY.	REQ.
-0	PBY 5A	28E6278	1

REQUIREMENTS PER AIRPLANE

REPLACES

REPLACED BY

4103 CALC. WT.

ACT. WT.

UNLESS OTHERWISE SPECIFIED: SCALE 12"=1'-0"; ± 1/32

STAMP PART NUMBER WHERE SHOWN

PART No.	STOCK	MATERIAL	SPEC.	LH REQ. -0	RH REQ. -2	LH REQ. -3	RH REQ. -4	LH REQ. -5	RH REQ.
AN3066-4				2					
AN3064-4					2				
AN515-8-6				2					
AC565-1032				2					
AN3015				1					
AN935-8				2					
AN520-10-8				2					
AN340-8				2					
AN960-AL10L				4					
28E6271				1					
28E6270-8					1				
28E6270-7						1			
28E6085-46							1		
-6								1	

PARTS LIST PER ASSY.

AC		9/25/41	E.V. Hamm	Correct	C. Eystad	Packard	Zuck
NAVY NONE	NONE	LANG	8/31/42		B.J.M.		Dec. 11, 1942
HEAT TREAT	FINISH	DRAFT	CHECK	STRUCT	MAT	APPROV	ENG.

NAME BOX ASS'Y. - ELEC. - WAIST GUNNER'S HEATER SW.

OPP. HAND

CONSOLIDATED AIRCRAFT CORP. SAN DIEGO, CALIF.

DWG. SIZE D

28E6272

R6

LET	ALTERATION	DATE	BY

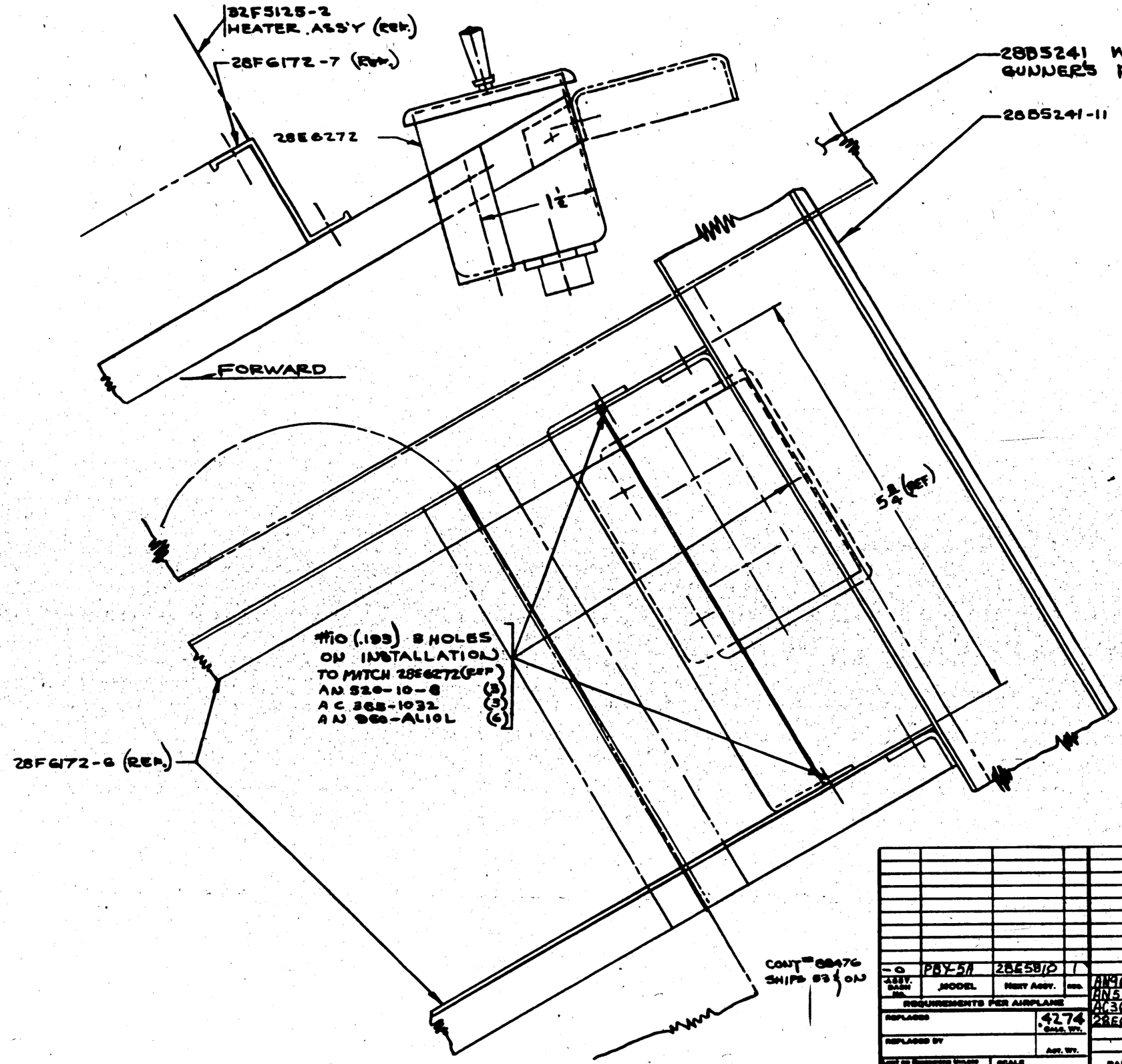

-0	PBY-5A	28E5810	1
-ASSY. DASH NO.	MODEL	NEXT ASSY.	REQ.

REQUIREMENTS PER AIRPLANE

REPLACES	4274 Gross Wt.
REPLACED BY	Act. Wt.
UNLESS OTHERWISE SPECIFIED DIMENSIONS ARE IN INCHES AND TOLERANCES ARE ± 1/32	SCALE 12" = 1'-0"

STAMP PART NUMBER WHERE SHOWN

PART No.	STOCK	MATERIAL	SPEC.	LH REQ. -0	RH REQ. -2	LH REQ. -3	RH REQ. -4	LH REQ. -5	RH REQ.
AN960-AL10L									
AN520-10-8									
AC365-1037									
28E6272									
-0									

PARTS LIST PER ASSY.

AC		3/24/42	EJ Moon				
NAVY NONE	NONE	LANG	3/27/42		EJ M		
HEAT TREAT	FINISH	DRAFT	CHECK	STRUCT	MAT	APPROV	ENG.

NAME INSTALLATION - ELEC. - WAIST GUNNER'S HEAT. SW.

CONSOLIDATED AIRCRAFT CORP. SAN DIEGO, CALIF.

OPP. HAND

SIZE D SCALE 28E6273

3/22/42

LET	ALTERATION	DATE	BY
A	ADDED -7 SUB-ASSY (0 ASSY TO WH CONSISTING OF SAE 6270-60, AN 3064-4 & AN 3066-4 (2) WHICH WERE REMOVED FROM -6 SUB ASSY. NO WT. CHG	2-15-43	EWM
B	30X 6½ AFT OF BLKHD 0.66 WAS 9 FWD OF BLKHD 1, ADDED -8, AN 526-D-1032-9 (4) & AC 965-D-1032 (4) WT. CHG NIL	9-14-43	EWM

EQ. A47779

EQ. A55243A

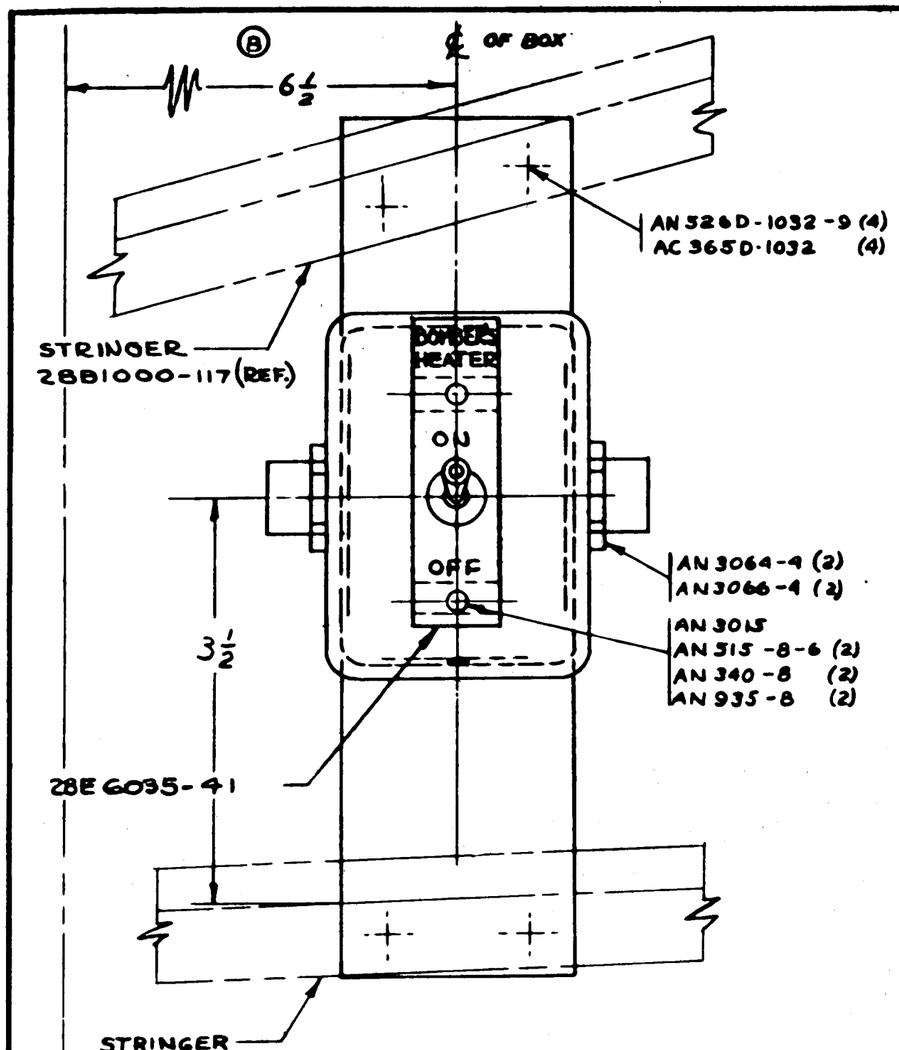

VIEW LOOKING OUTBOARD - STARB'D. SIDE
FORWARD

℄ BELTFRAME 0.66

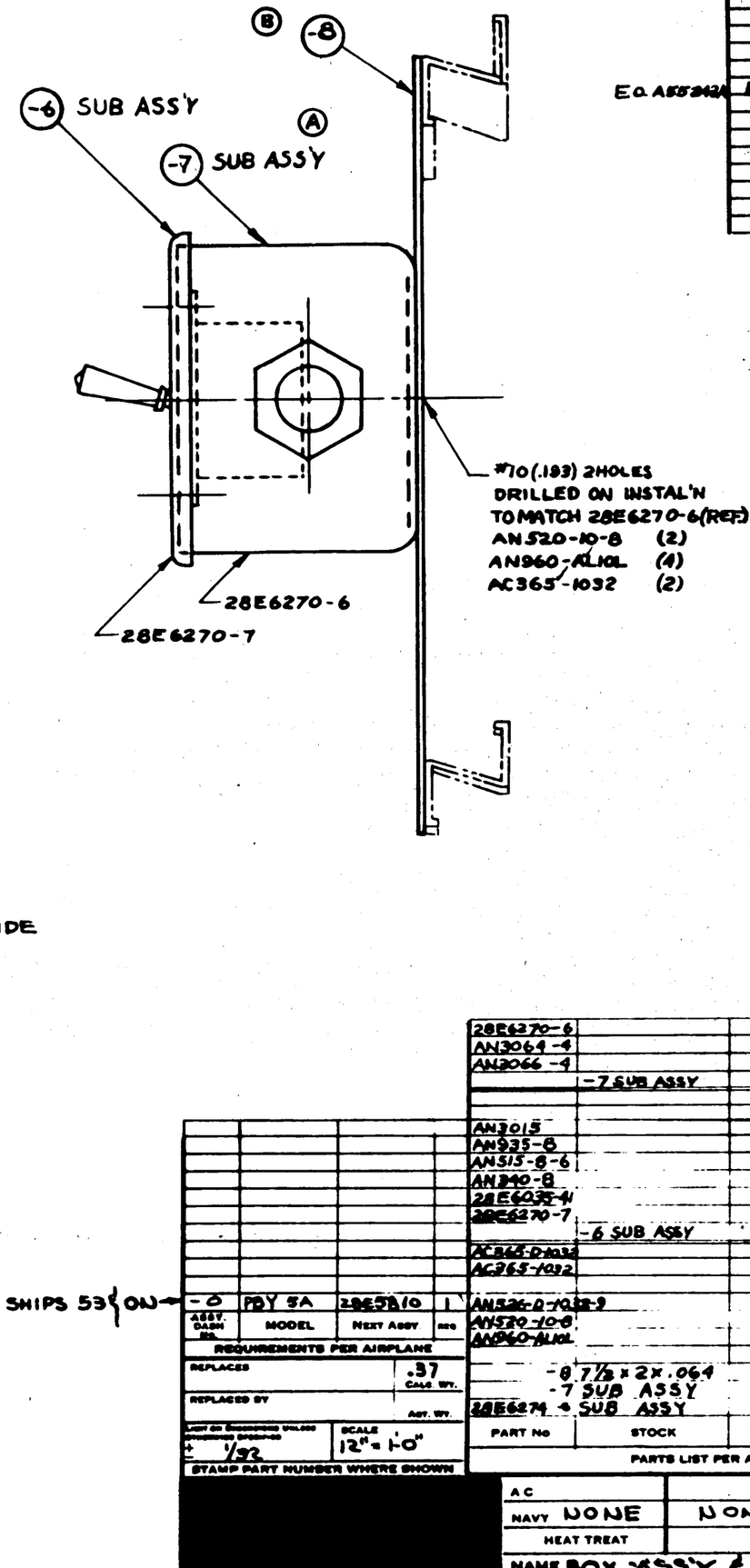

CONT. #88476 SHIPS 53 ON →

PART NO	STOCK	MATERIAL	SPEC.	LH REQ. -0	RH REQ. -2	LH REQ. -3	RH REQ. -4	LH REQ. -5	RH REQ.
28E6270-6				1					
AN3064-4				2					
AN2066-4				2					
	-7 SUB ASSY								
AN3015				1					
AN935-8				2					
AN515-8-6				2					
AN340-8				2					
28E6035-41				1					
28E6270-7				1					
	-6 SUB ASSY								
AC365-D-1032				4					
AC365-1032				2					
AN526-D-1032-9				4					
AN520-10-8				2					
AN960-416L				4					
-8 7½ x 2 x .064		24ST		1					
-7 SUB ASSY				1					
28E6274 -6 SUB ASSY				1					

PARTS LIST PER ASSY.

ASSY. DASH NO.	MODEL	NEXT ASSY	REQ
-0	PBY 5A	28E5A10	1

REQUIREMENTS PER AIRPLANE

REPLACES — CALC WT. .37

REPLACED BY — ACT. WT.

UNLESS OTHERWISE SPECIFIED ± 1/32 — SCALE 12" = 1'-0"

STAMP PART NUMBER WHERE SHOWN

AC		BY 7-24-42	MOORE	HEBERT	OSTER	MACNL	ZURN
NAVY NONE	NONE	LANG	PAULSON 7-27-42		E.T.M.		
HEAT TREAT	FINISH	DRAFT	CHECK	STRUCT	MAT	APPROV	ENG.

NAME BOX ASS'Y. & INSTALL.-ELEC.-
BOMBER'S HEATER SWITCH.

OPP. HAND —

CONSOLIDATED AIRCRAFT CORP. SAN DIEGO, CALIF.

SIZE D — 28E6274

R

LET	ALTERATION	DATE	BY

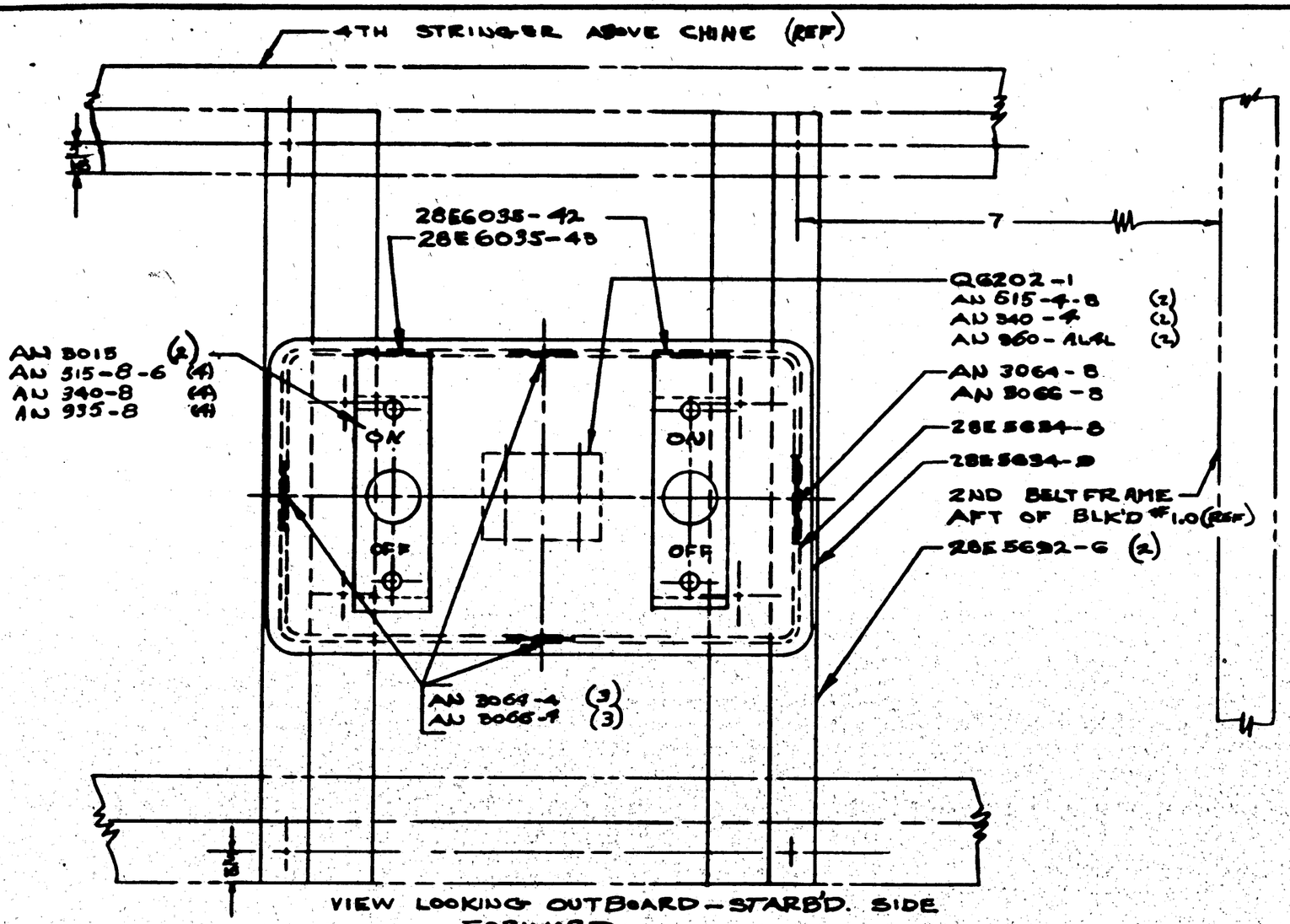

PART No.	STOCK	MATERIAL	SPEC.	LH REQ.	RH REQ.	LH REQ.	RH REQ.	LH REQ.	RH REQ.	LH REQ.	RH REQ.	LH REQ.	RH REQ.
PARTS LIST PER ASSY.				-0		-2		-3		-4		-5	
AN 30:5				3									
AN 935-8				4									
AN515-8-6				4									
AN340-8				4									
28E6035-43				1									
28E6035-42				1									
28E5634-9				1									
-7 SUB ASS'Y													
AC365-832				4									
AN3064-8				1									
AN3066-4				3									
AN3064-8				1									
AN3060-4				3									
AN960-AL4L				2									
AN960-AL8L				3									
AN515-8-8				4									
AN515-8-6				2									
AN340-4				2									
QG202-1				1									
28E5692-1				2									
28E5634-8				1									
-6 SUB ASS'Y													
AC365-832				4									
AN 960-AL10L				6									
AN515-8-8				4									
28E6275-7	SUB ASS'Y			1									
28E6275-6	SUB ASS'Y				1								

-0 PBY5A 28E5810 1

A/C			7/16/42
NAVY NONE	NONE	LANG	8/13/42
HEAT TREAT	FINISH	DRAFT	CHECK / STRUCT / MAT / APPROV / ENG.

NAME BOX ASS'Y & INSTD.-ELEC.-CO-PILOTS HEATER SW. & JUNCTION

CONSOLIDATED AIRCRAFT CORP. SAN DIEGO, CALIF.

OPP. HAND

DWG. D SIZE 28E6275

REQUIREMENTS PER AIRPLANE

REPLACED .866 Gross Wt.

REPLACED BY Adv. Wt.

SCALE 12" = 1'-0"

STAMP PART NUMBER WHERE SHOWN

LET	ALTERATION	DATE	BY
A	NAF 1077-12 (1) WAS AN3102-16S		
	-4S (1). WT. CHG. NEG.	12-28-42	[illegible]
B	REPLACED -0 ASSY FOR PBY-5 & 5A		
	WITH -2 ASSY. NO WT. CHG.	12-28-42	[illegible]
C	CREATED -3, -4 & -5 ASSYS. NEG. WT.		
	CHG.	12-28-42	[illegible]

E.O. A60959 (CAC 924)

E.O. A64347

E.O. A80116 (89-18)

28E6352-6 Box (REF)

NAF-1077-12 (1) Ⓐ
AN515-6-6 (4)
AN340-632 (4)
AN935-6 (4)
Q7102 AL-6 (4)

28E6352-7 COVER (REF)

NNF-018-180 (1)-(FOR -2, -3, -4 & -5 ASSYS)
28E6035-50 (1)-(FOR -0 ASSY ONLY) Ⓑ
AN3015 (1)
AN515-6-6 (2) — FOR ALL ASSYS Ⓒ
AN340-632 (2)
AN935-6 (2)

28E6380-6 (1) (FOR -3 ASSY ONLY)
28E6380-7 (1) (FOR -4 ASSY ONLY)
28E6380-8 (1) (FOR -5 ASSY ONLY) Ⓒ

AN960-1032-10 (1)
AN348-10 (2)
AN935-10 (2)
AC365-1032 (2)
Q7102 AL10 (2)

28E6352-0
Box & Cover

AN3064-4 (1)
AN3064-4 (1)

NOTE:
SHELLAC 28E5380-6, -7 & -8 TO INSIDE OF BOX AND COVER WITH SHELLAC ON -3, -4 & -5 ASSYS, RESPECTIVELY.

Ⓒ

(89-18)
CONT. 91876 #91 & ON

CONT. 91876 #1 TO 90

PBY-5
SA 935-34
- 536-100 - 1115 SHIPS

PBY-5A
SA 935-47
- 536-100-28 SHIPS
- 847766 118 SHIPS

PBY-5B
A.O. 932-25

ASSY. SHEET NO.	MODEL	NEXT ASSY.	REQ'D
-5	PBY-5	28E6355	1
-4	PBY-5	28E6354	1
-3	PBY-5	28E6353	1
-2	PBY-5A	28E6384	2
-1	PBY-5	28E6352	1
-0	PBY-5B	28E6384	2
-2	PBY-5A	28E6352	1
-1	PBY-5	28E6352	2
-0	PBY-5B	28E6352	1

REQUIREMENTS PER AIRPLANE

REPLACES — CALC. WT. 1.40

REPLACED BY — ACT. WT.

UNLESS OTHERWISE SPECIFIED DIMENSIONS ARE IN INCHES — SCALE 12"=1'-0"

STAMP PART NUMBER WHERE SHOWN

PART NO.	STOCK	MATERIAL	SPEC.	LH REQ.	RH REQ.	LH REQ.	RH REQ.	LH REQ.	RH REQ.	LH REQ.	RH REQ.	LH REQ.	RH REQ.
28E6380-6												1	
28E6380-7													1
28E6380-8								1					
NNF-018-180						1		1		1		1	
Q7102 AL6				4		4		4		4		4	
AN935-6				2		2		2		2		2	
AN935-6				4		4		4		4		4	
AN935-6				2		2		2		2		2	
AN340-632				4		4		4		4		4	
AN515-6-6				4		4		4		4		4	
AN515-6-6				2		2		2		2		2	
Q7102 AL10				2		2		2		2		2	
AC365-1032				1		1		1		1		1	
AN935-10				1		1		1		1		1	
AN960-1032-10				1		1		1		1		1	
AP30660A				1		1		1		1		1	
AN3064-4				1		1		1		1		1	
AD3015				1		1		1		1		1	
NAF1077-12				1		1		1		1		1	
28E6088-50				1									
28E6352				1									

PARTS LIST PER ASSY.

-0 REQ.	-2 REQ.	-3 REQ.	-4 REQ.	-5 REQ.			

A C
NAVY
HEAT TREAT — FINISH

DRAFT	CHECK	STRUCT	MAT	APPROV	ENG.
4-16-42		CARSON	BOWLES	CHIEF	TUCK
Thompson	Thomas			7-27-42	HAROLD

NAME BOX ASS'Y - ELEC - CAMERA SWITCH

OPP. HAND

SIZE D — DWG. 28E6351

CONSOLIDATED AIRCRAFT CORP. SAN DIEGO, CALIF.

LTR	ALTERATION	DATE	BY
A	IN BOX & PER AIRPLANE BLOCK CHANGE REQUIREMENTS TO 2 - WAS 1 ON PBY-5 PBY-5A (PBY-5B.	7/7/43	WWH
	NO WEIGHT CHANGE		

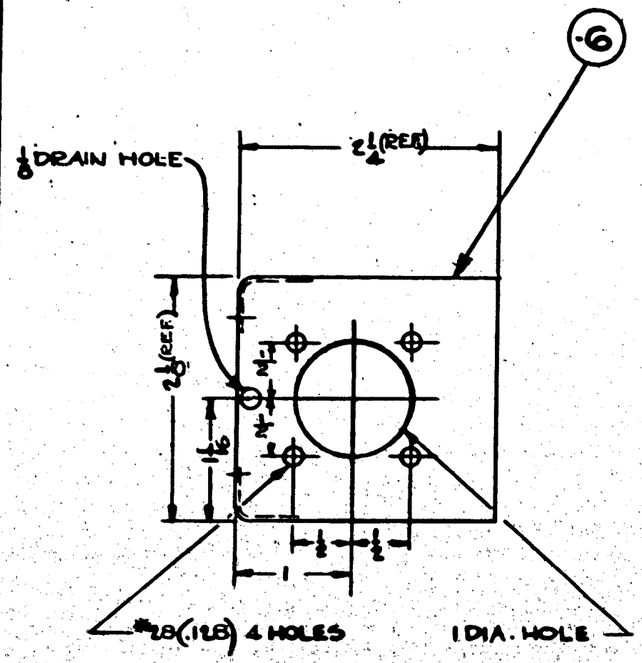

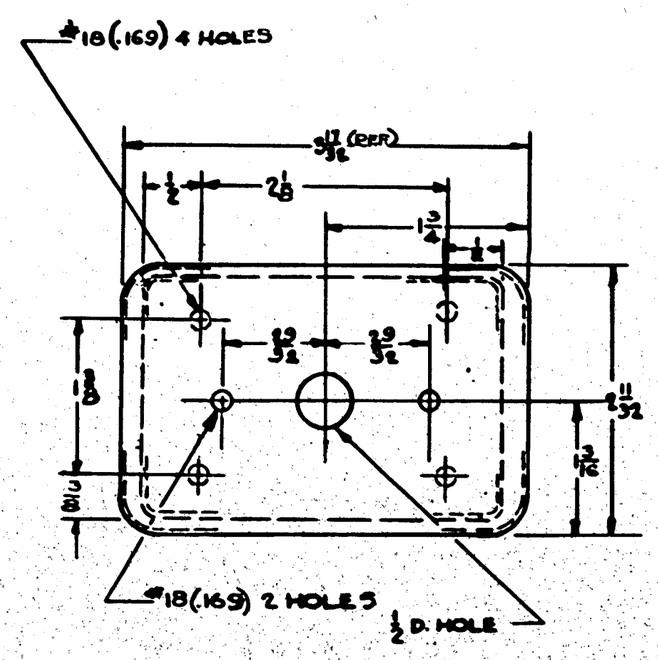

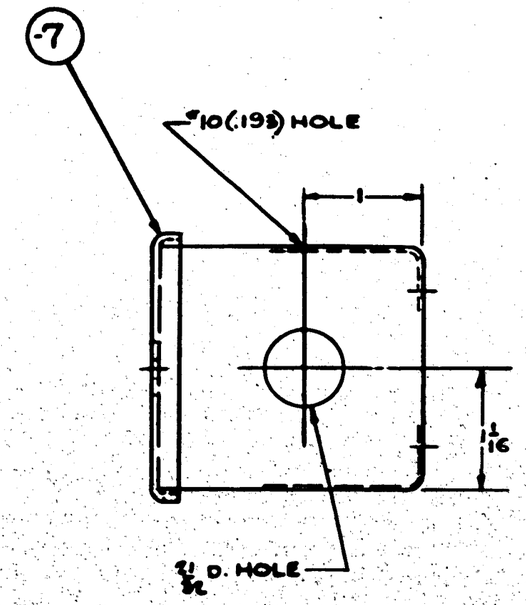

FINISH CODE

Z	ANODIC TREATMENT
P	P-27 PRIMER
AP	ALUMINIZED PRIMER
C	CADMIUM PLATE

GP GREEN PRIME

NOTES:

1) BOX & COVER MAY BE PURCHASED FROM MONARCH TOOL & INSTR. Co. SPECIFING
   MT-1004-208 BOX
   CP-1004 COVER
   OR POULSEN-NARDON Co
   P-N 1065-208 BOX
   1065 COVER
2) BOX TO BE FURNISHED WITH TIGHT FITTING COVER NON-LOSEABLE SCREWS & DURAL WASHERS FINISH P-INSIDE & P-GP OUTSIDE

PBY-5A
SQ 953-47
SQ 936-100
SQ 949-66
PBY-5
SQ 955-34
SQ 936-100
PBY-5B
SQ 952-35

ASSY. GAGE NO.	MODEL	NEXT ASSY.	REQ'D
-0	PBY-5A	28E6331	3
-0	PBY-5	28E6331	3
-0	PBY-5B	28E6331	3

REQUIREMENTS PER AIRPLANE

REPLACES — 1.24 CAAC QTY.
REPLACED BY — ACT. QTY.
SCALE 12"=1'-0"
STAMP PART NUMBER WHERE SHOWN

PART No.	STOCK	MATERIAL	SPEC.	LH REQ. -0	RH REQ. -2	LH REQ. -3	RH REQ. -4	LH REQ. -5	RH REQ.
-7	COVER BOX	CAC - 155-20.		1					

PARTS LIST PER ASSY.

AC		6-26-43		GEARS	BOWLES	CADOVER	ZUCK
NAVY NO.	NOTED	MONO	MONO			7-28-43	WOLB
HEAT TREAT	FINISH	DRAFT	CHECK	STRUCT	MAT	APPROV	ENG.

NAME BOX-ELEC-CAMERA SWITCH

OPP. HAND

CONSOLIDATED AIRCRAFT CORP. SAN DIEGO, CALIF.

SIZE D 28E6352

R

LET	ALTERATION	DATE	BY
A	ADD .120 DIA. 2 HOLES & DIM'S		
	AS PER E.O. A38624 & E.O. A64233 A	4-24-42	BOMA
B	CREATED -2 ASS'Y SAME AS -0 ASS'Y EXCEPT -A REPLACED -6, ADDED DETAIL OF -8 BOX. WT. CHG. NOTED-7-43		
C.	FOR -2 ASS'Y NA 28E3634 WAS 29E3668 NO WT. CHG.	8-2-43	Collins

E.O. A38624
E.O. A64233 A

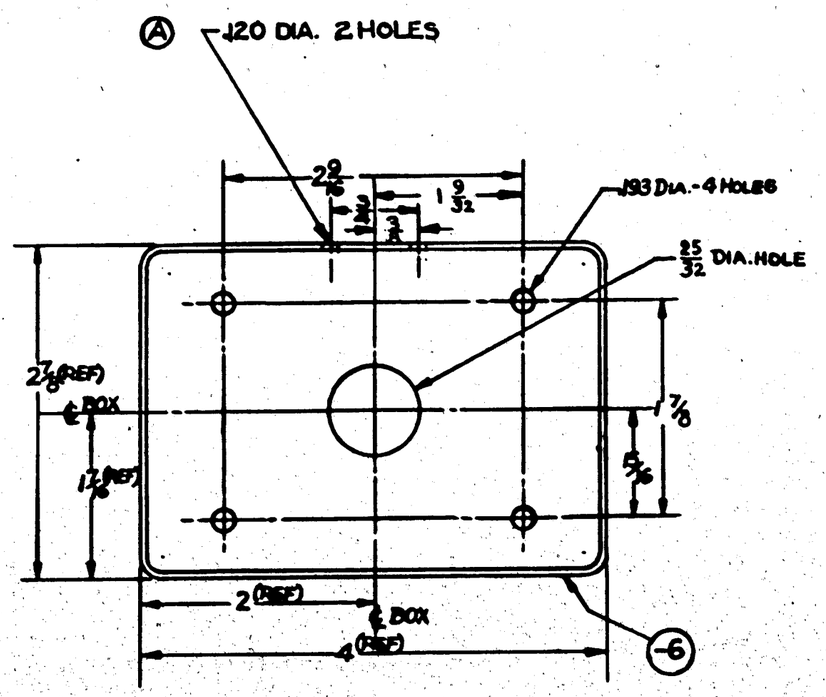

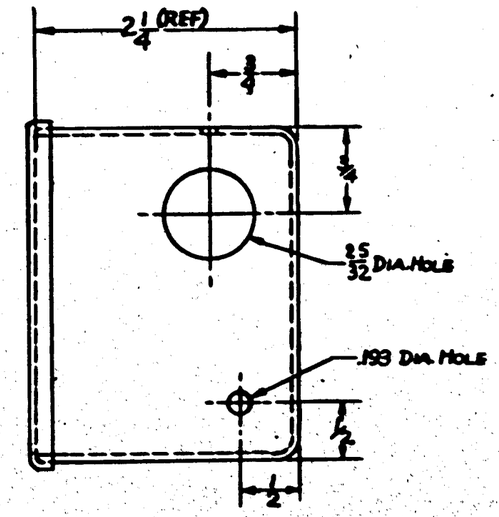

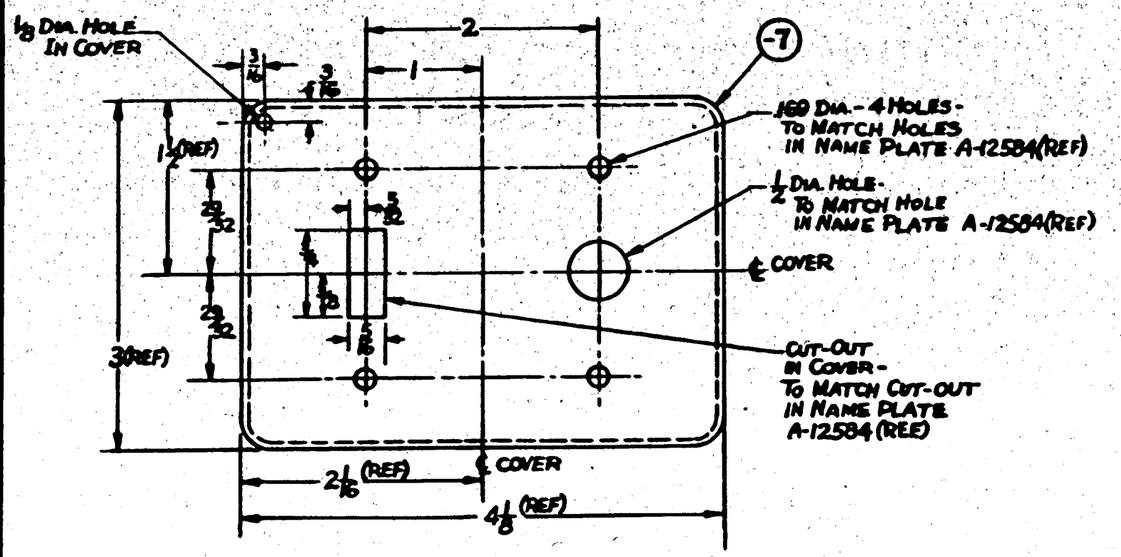

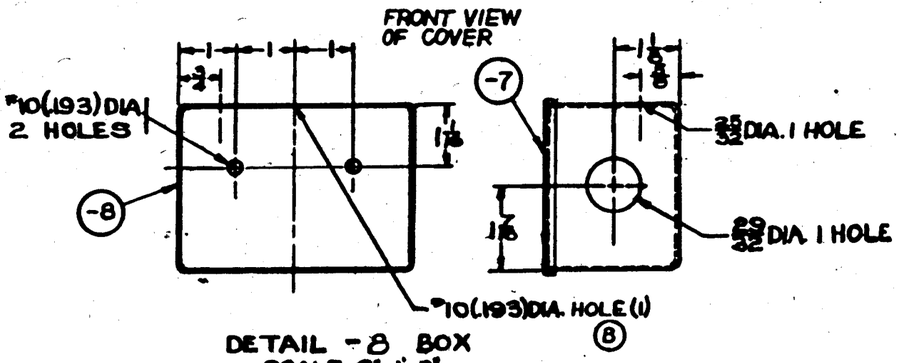

DETAIL - 8 BOX
SCALE-6"-1'-0"

NOTES:-
1- BOX & COVER MAY BE PURCHASED FROM MONARCH TOOL & INSTR. CO. SPECIFYING
1005 R-208 BOX
MT-CSD 1005 COVER
OR FROM POULSEN & NARDON CO. SPECIFYING
1125-208 N BOX
P & N 1125-35D COVER
2- BOX TO BE FURNISHED WITH TIGHT FITTING COVER, NON-LOSEABLE SCREWS & DURAL WASHERS.
3- REMOVE FINISH 4/32 RADIALLY AROUND CONDUIT HOLES.
4- FINISH: P- INSIDE, P-AP OUTSIDE

FINISH CODE
P-P-27 PRIMER
AP-ALUMINIZED PRIMER

C. NO. (9) 464
15 1/2 ON
C. 91876 9 1/2 ON
#1:150

ASSY. BASIC No.	MODEL	NEXT ASSY.	QTY.
-2	PBY-5A	28E5436	1
-2	PBY-5B	28E5436	1
-2	PBY-5	28E5436	1
-0	PBY-5	29E3669	1

REQUIREMENTS PER AIRPLANE

REPLACES — .282 CALC. WT.

REPLACED BY — ASY. WT.

SCALE NOTED 12"=1'-0"

STAMP PART NUMBER WHERE SHOWN

-8 BOX
-6 COVER CAC. BOX #24-208N
-4 BOX

PART No.	STOCK	MATERIAL	SPEC.	LH RH REQ. -0	LH RH REQ. -2	LH RH REQ. -3	LH RH REQ. -4	LH RH REQ. -5
PARTS LIST PER ASSY.								

AC
NAVY NONE
HEAT TREAT

NOTED
FINISH

PROJECTION	WRIGHT			PAC. MIL. & U.S.		
8/2/42	CARLISLE 8/3/42	MEC				
DRAFT	CHECK	STRUCT.	MAT	APPROV.	ENG.	

NAME BOX-ELEC.-WINDSHIELD WIPER CONTROL

OPP. HAND NONE

CONSOLIDATED AIRCRAFT CORP. San Diego, Calif.

SIZE D

29E3668

OPPOSITE HAND								
DRAWING APPLIES ON:				DETAIL PARTS PER ASSEMBLY:				
AIRPLANE GROUP	ASSEMBLY NUMBER	NO. PER SHIFT	NO. PER AIRPLANE	STANDARD PARTS	NO. REQ'D	PART NUMBER	NO. REQ'D

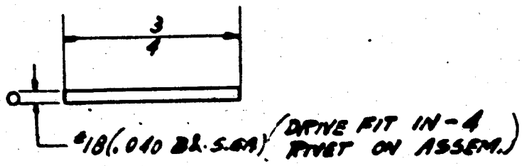

(-7) PIN.
BRASS ROD
1 REQ'D.

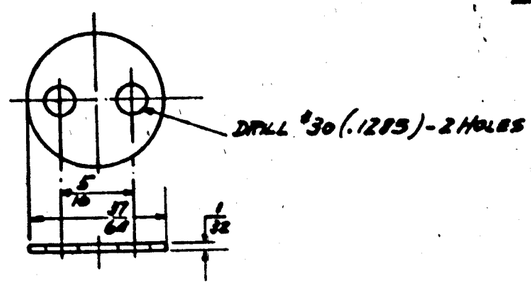

(-3) INSULATOR-
INSULATING MATERIAL
1 REQ'D.

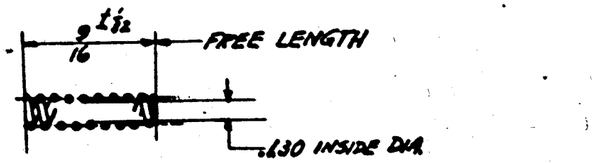

(-1) SPRING
#24 (.020) PHOS. BRZ.-WIRE- 9 TURNS
2 REQ'D.

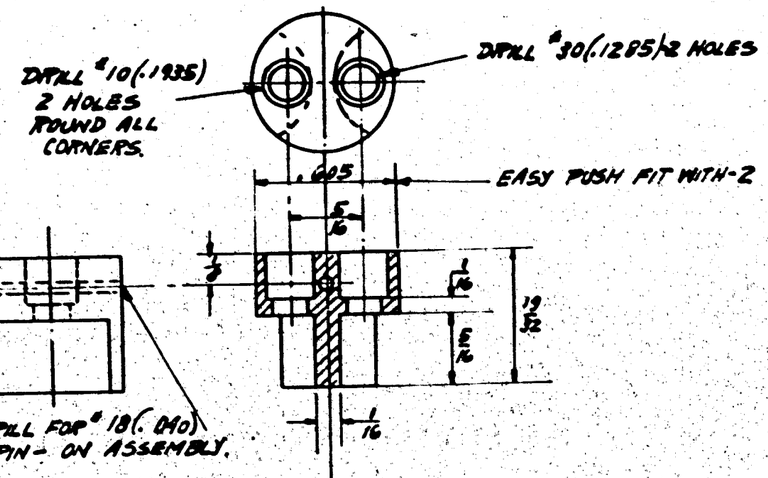

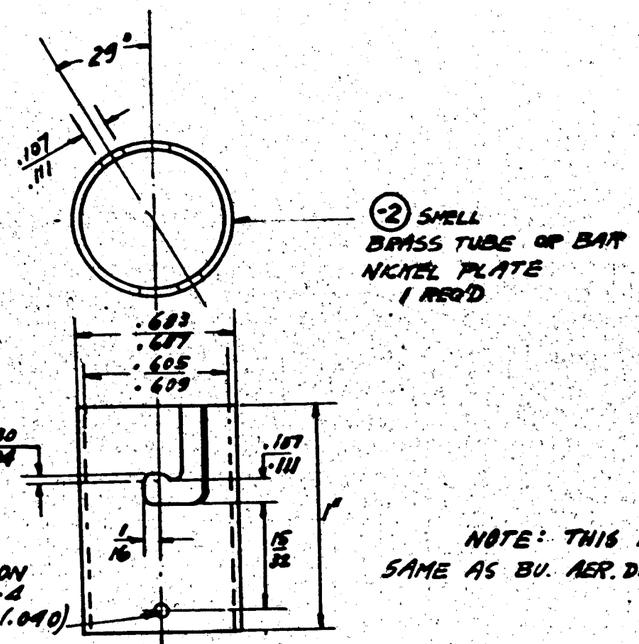

(-2) SHELL
BRASS TUBE OR BAR
NICKEL PLATE
1 REQ'D

NOTE: THIS PART SAME AS BU. AER. DWG. #55988

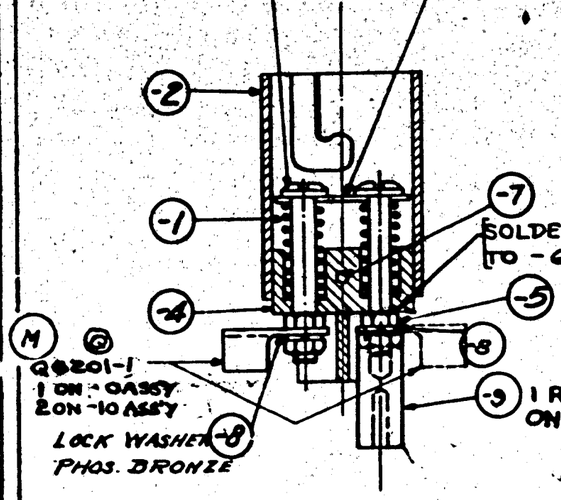

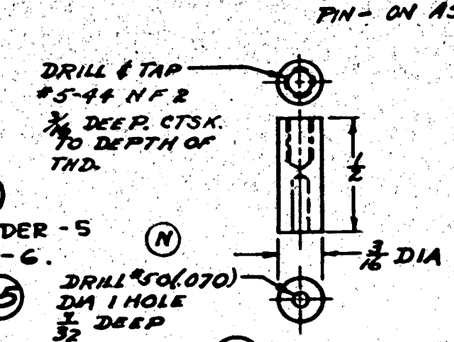

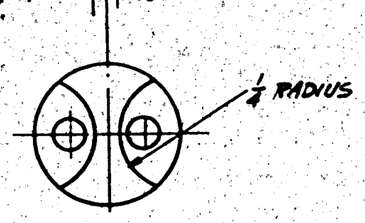

(-4) PLUG
INSULATING MATERIAL
1 REQ'D.

(M) (9) TERMINAL
BRASS BAR

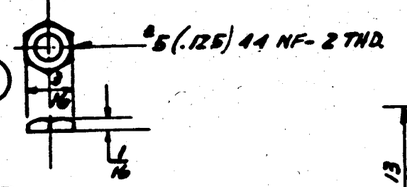

(-5) NUT
BRASS BAR
1 REQ'D.

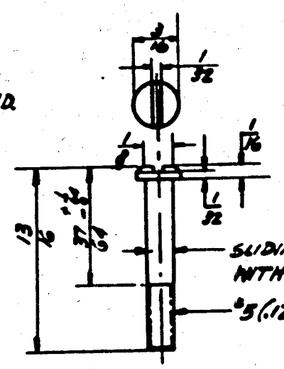

(-6) CONTACT SCREW
BRASS BAR

ALL INSULATING MATERIAL TO BE ITP5 SPEC. TYPE FBG.
(T) OR ITP4 TYPE CFG MOLDED

T	ADDED: 1/16 THK. STOCK UNDER -5 WASHER - NO MATL. NOTE	5-8-40	Thomson
S	ADDED: PBY-4 REQS FOR -10	1-28-38	Phillips
	ADDED: HEXAGONAL SHAPE TO -5	1-28-38	Phillips

R	REMOVED LEAD OF Q6201-2 & -3 FROM 5/8	11-4-37	Thomson
Q	Q6201-1 REPLACES 22F1179	11-4-37	Thomson
P	ADDED -10 ASS'Y.	9-27-37	Phillips
	ADDED NOTE FOR -9 & SOLDER	9-30-37	Vinci.
	NOTE. ADDED PBY-4 & 5 REQ.		
O	REMOVED NOTE ON 22F1179		
N	CHGD. -9 DRILL #50 WAS #54	10-13-36	McCabe
M	ADDED -9 & ITS DETAIL TO SHEET		
	ASSY. ADDED NOTE RE 22F1179 REMOVED FROM ASSY. & SOCKET HOUSING		
L	FOR PBY-4, ASS. NO. CHANGED		
	FROM 28E6052 TO 28E6041		
	ADDED 28E6054 FOR PBY-5	8-23-36	Arnold
K	ADVANCED UP TO DATE	2-10-33	Mould
LET	CHANGED	DATE	CH. BY

-10	PBY-5B	28E6054		18	
-10	PBY-5A	28E2099		9	
-10	PBY-5A	28E5015		9	
-10	PBY-5A	28E5771		9	
-10	PBY-5A	28E6054		9	
-10	PBY-5	28E2049	9	9	
-10	PBY-5	28E5015	9	9	
BASIC NO.	MODEL	ASS'Y No.			
DRAWING APPLIES ON:					

-10	PBY-4	28E6050	9	9			
-10	PBY-4	28E2049	9	9			
-10	PBY-4	28E5015	9	9			
-10	PBY-4	28E5771	9	9			
XPBY-4		28E6041	9	9			
PBY-4		28E6041	9	9			
PBY-4		28E6041	9	9			
XPBY-4		28E6054	9	9			
		22F1058	1	1			
		22F1163	1	1			
		22F1187	1	1			
		22F1092	10	10			
		22F1283	3	3			
		22F1144	2	2			
		22F1079	2	2			
		22F766	1	1			
PBY-1		28E6051	1	1			

PBY-1 ONLY		22F0045	1	1			
		Q6201-1	1	1			
		-9	2	2			
		-7	1	1			
		-6	2	2			
		-5	4	4			
		-4	1	1			
		-3	1	1			
		-2	1	1			
		22F0045-1	2	2			

HAVE APPROVED							
DATE							
CALC. WT. .46	ACT. WT. .87	AIRPLANE GROUP	ASSEMBLY NUMBER	NO. PER SHIFT	NO. PER AIRPLANE	STANDARD PARTS	NO. REQ'D	PART NUMBER	NO. REQ'D
SCALE 2/1		DRAWING APPLIES ON:				DETAIL PARTS PER ASSEMBLY:			

MATERIAL	NOTED	DRAFTSMAN	M.A.C. 10-2-37
SPEC'S. AN NO.:	COMM	STRENGTH & WT. EXAM.	ROLLOP
HEAT TREAT	NONE	CHECKED	
FINISH	NONE	APPR'D. & REL'S'D.	

SOCKET - INSTRUMENTS - ELECT. LAMP

CONSOLIDATED AIRCRAFT CORPN. DR'W'G. No. 22F0045

CONSOLIDATED-DUPLICATOR CO., INC. BUFFALO BLUEPRINTS PRINTS CLOTH

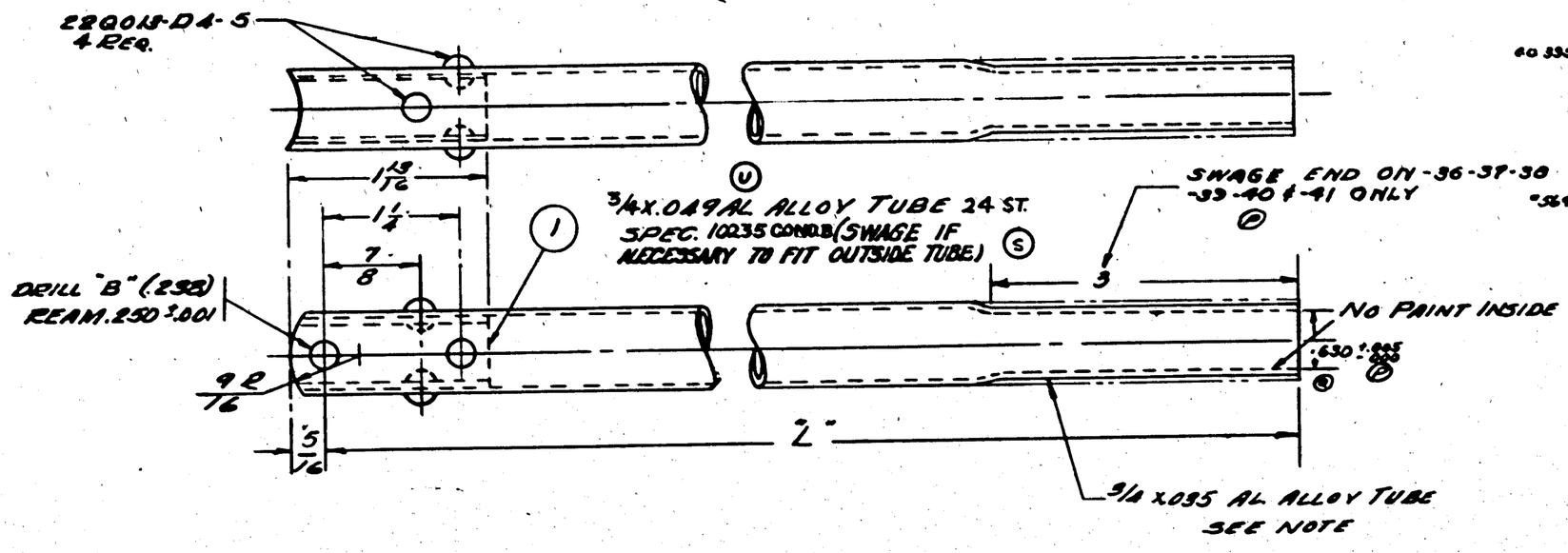

LET	ALTERATION	DATE	BY
N	ADDED TO DATA & TRACED	9-[illegible]-41	[illegible]
O	PBY-1 ADDED	10-23-41	JAMES
P	ADDED SWAGING ... OPERATION 40 3332 ... ON -37-38-39-40-41	11-[illegible]-41	[illegible]
Q	DIMENSION WAS TO THE OUTSIDE NOW TO THE INSIDE	7-27-37	[illegible]
R	PBY-2 & PBY-3 NEXT ASSY. WAS 28F021	7-30-37	[illegible]
S	ADDED SWAGING NOTE	9-27-37	[illegible]
T	-33 -34 & -35 REQT WAS 2 EA. FOR PBY-2 & PBY-3 *5845	4-27-38	[illegible]
U	ADDED REQMTS OF -43 & MATR'L NOTE TO FACE, CALC WT. .128 NOTED	6-26-42	[illegible]
V	MATR'L FOR -(3/4 X .049 AL AL TUBE 24ST SPEC. 10235 COND B WAS 7/8 X .049 AL AL TUBE SPEC 44T21, WT CHANGED	6-26-42	[illegible]
W	ENG. MATL. SPEC AC WW-T-786 (T) TO SPEC. 10235 COND B NO WT CHANGE	[illegible]	[illegible]

LEG ASSEM. No.	"L"	TUBE PART No.	No. REQ'D PBY-2	No. REQ'D PBY-3	No. REQ'D XPBY-1	PBY-1	PBY-2	PBY-3	PBY-4	CALCUL. WEIGHT	ACT. WEIGHT
22F047-2	20 3/4	22F047-11	1	1							.175
-3	21 1/2	-12	1	1							.180
-4	22 1/8	-13	1	1							.185
-5	19 1/2	-14	1	1							.164
-6	22 13/16	-15	1	1							.191
-7	22 7/16	-16	1								.187
-8	22 5/8	-17	1								.189
-20	23 3/8	-23	1	1							.200
-21	23 15/16	-24	1								.210
-26	19 1/4	-26	1	1							.165
-29	21 1/16	-27	1	1							.178
-30	24 3/16	-36			1	1	1	1	1	.246	
-31	24 13/16	-37			1	1	1	1	1	.248	
-32	25 5/16	-38			1	1	1	1	1	.252	
-33	27 3/16	-39			2	2	1	1	1	.272	
-34	25 11/16	-40			2	2	1	1	1	.256	
-35	23 31/32	-41			2	2	1	1	1	.232	
			No. REQ'D XB-32	No. REQ'D YB-32							
-43	14 1/4	-44	1	1						.122	

MATERIAL & FINISH
PBY-2 & PBY-3 AL ALLOY TUBE - SPEC. 44T21 - HT. SR53
FINISH - Z-3AKV
XPBY-1 - AL ALLOY TUBE
SPEC. - 44T28
FINISH - Z-3AKV

PBY-1 TUBE SPEC. 44T28 CONT.
24ST AL. ALLOY
FINISH Z-3AKV

(V) FOR XB-32 & YB-32
MATR'L. AL AL TUBE 24 ST.
(W) SPEC. 10235 COND B
FINISH. ZF-32-001

22F047-1 - 1 REQ. EACH ASSEM.
22Q013-D4-5 - 4 REQ. EACH ASSEM.

-43	XB-32	33A845X	1
-43	YB-32	33A845X	1
-41	XB-32	33F330	1
-41	YB-32	33F330	1
	28-5MN	28F021	1 EA.
	PBY5	↓	1 EA.
	28-5MN	↓	1 EA.
	PBY5	↓	1 EA.
	28-5MN	↓	1 EA.
	PBY5	28F021	1 EA.
	28-5MNF	28F5003	
	PBY-5	28F021-20	
	PBY-4	28F021-20	
	PBY-3	28F021-20	
	PBY-2	28F021-20	
	PBY-1	28F021	
	XPBY-1	22F021	
	PBY-3	22F045	
	PBY-2	22F045	

PARTS 22F047-30, -34, -32
PARTS 22F047-30-35 INC.
PARTS 22F047-30 35 INC
PARTS 22F047-30-35 INC
PARTS 22F047-30-35 INC
PARTS 22F047-30-35 INCL.
PARTS -2 TO -8 INC & -20, -24, -28

REPLACED BY
LIMIT ON DIMENSIONS UNLESS OTHERWISE SPECIFIED ±
SCALE 18"=1'0"
AC —
NAVY NOTED
MATERIAL

ACCEPTED 10-23-35 DATE
CALC. WT. ACT. WT.

O.N.	MODEL	NEXT ASSY.	REQ.	ST'D PARTS	LH REQ.	RH REQ.	PART NO.	LH REQ.	RH REQ.
REQUIREMENTS PER AIRPLANE				MAT.	PARTS LIST PER ASSY.		NOTED		

NOTED	NOTED	NOTED
SPEC.	HEAT TREAT	FINISH

CONSOLIDATED AIRCRAFT CORP. BUFFALO, N. Y.
STAMP PT. No. WHERE SHOWN

NAME LEG (FURNISH.) BUNK-OUTER TELESCOPING

DRAFT | CHECK | ENGR. | ENG.

OPP. HAND

SIZE D — 22F047

SUPPLIES & EQUIPMENT CLASSIFICATION			
LET	ALTERATION	DATE	BY
J	ADDED TO PARTS TABULAR	[illegible]	[illegible]
K	PBY-1 ADDED	10-24-35	MMG
L	PBY-2 & PBY-3 REQ ADDED		
M	PBY-2 & PBY-3 NEXT ASSY WAS 28F021	2-26-37	CEW
N	-18 -19 & -20 REQ'T. WAS 2 EA. FOR PBY-2 & PBY-3	4-27-38	ACH
P	ADDED SPEC. NOTE FOR -3 & -15 TO -20 INCL. NO WT. CHG.	7-6-42	[illegible]
Q	ADDED -25 FOR XB32 & YB32, 1 FINISH & SPEC. NOTE. WT. CHG. "NONE"	9-29-43	[illegible]
R	.250 +.005 -.001 DIA REALCS "DRILL---" "REAM .250 ± .001. NO WT. CHG.	9-29-43	[illegible]

EO. # 36845
EO. # 38737
EO. # 38975

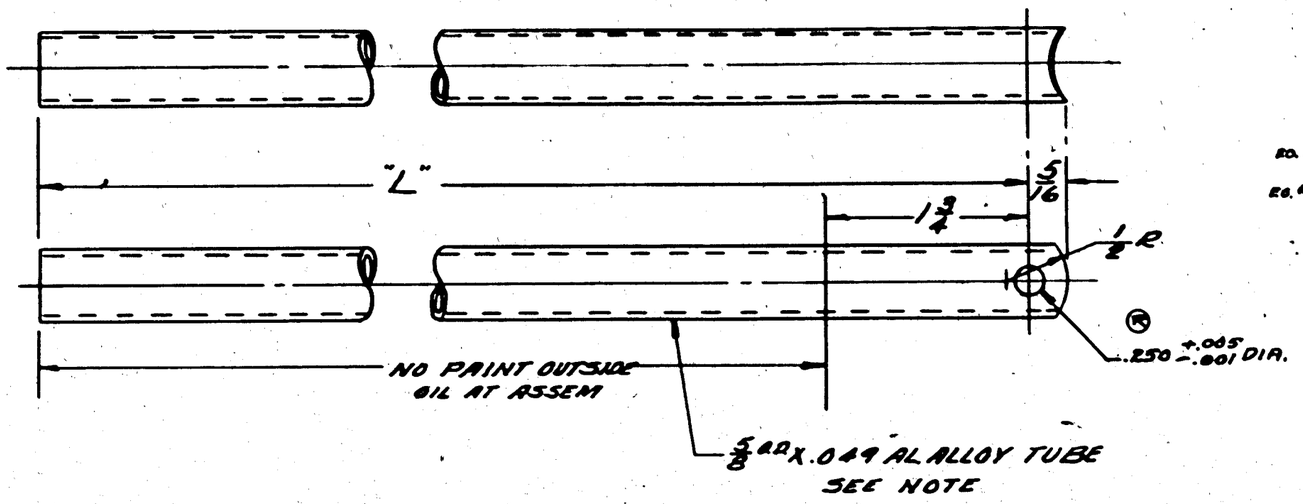

PART NO.	"L"	No. Req. PBY-2	No. Req. PBY-3	No. Req. XPBY-1	PBY-1	PBY-2 (N)	PBY-3	PBY-4	CALCUL. WEIGHT	ACTUAL WEIGHT	XB32 (Q)	
22F049-1	20 21/32	1	1							.19		
-2	21 1/2	1	1							.19		
-3	22 1/8	1	1							.209	1	
-4	19 45/32	1	1							.184		
-5	22 13/16	1	1							.200		
-6	22 3/16	1								.215		
-7	22 19/32	1								.21		
-10	23 1/8	1	1							.21		
-11	23 15/16	1								.22 C		
-13	18 7/16	1	1							.169		
-14	20 9/16	1	1							.180		
-15	24 1/32			1	1	1	1	1	.216			
-16	24 1/4			1	1	1	1	1	.218			
-17	24 17/32			1	1	1	1	1	.220			
-18	26 9/16			2	2	1	1	1	.239			
-19	24 3/32			2	2	1	1	1	.221			
-20	22 29/32			2	2	1	1	1	.203			
-25	14 1/2								.120		1	

MATERIAL & FINISH
PBY-2 & PBY-3 - AL ALLOY TUBE
SPEC. 44T21, H.T. SR 53
FINISH - Z-3AKV
PBY-1 & XPBY-1 - AL. ALLOY TUBE 24ST
SPEC. - 44T2B COND. T
FINISH - I-3AKV
(Q) XB32 & YB32 FINISH-ZF33-001 SPEC. WW-T-786 (T)

(P) NOTE
SPECS. FOR -3 -15-16-17-18-19 & -20 IS 44T2BA COND. T FOR ALL LISTED MODELS. THIS SUPERCEDES ABOVE SPEC. NOTE ON GIVEN DASH NOS. ONLY.

PARTS 22F049 -15 TO -20 INCL.
PARTS 22F049 -15, -16, -17
PARTS 22F049 -15 -20 INCL.
PARTS 22F049 -15-20 INCL.
PARTS 22F049 -15-20 INCL
PARTS 22F049 -15-20 INCL
PARTS 22F049 -15 TO 20 INCL

-25	XB32	33A853	1
-		33A[illegible]	
-3	XB-32	33 F330	
-		[illegible]	
	28SMN	28F021	
	28-5-MF	28R5503	
	PBY-5	28F021-	
	PBY-4	28F021-20	
	PBY-3	28FA21-20	
	PBY-2	28FA21-20	
	PBY-1	28F021	
	XPBY-1	28F021	—
	PBY-3	22FA25	—
	PBY-2	22FA25	—

O.M.	MODEL	NEXT ASSY.	REQ.	ST'D PARTS	LH REQ.	RH REQ.	PART NO.	LH REQ.	RH REQ.
REQUIREMENTS PER AIRPLANE				MAT.	PARTS LIST PER ASSY.				
AC									
NAVY NOTED	NOTED	NOTED		NOTED					
MATERIAL	SPEC.	HEAT TREAT		FINISH	DRAFT	CHECK	EXAM.	ENG.	

REPLACES
REPLACED BY
LIMIT ON DIMENSIONS UNLESS OTHERWISE SPECIFIED ± 1/64
CALC. WT. NOTED ACT. WT.
SCALE 12" = 1'-0"
APPROVED [illegible] 10-25-35 DATE

CONSOLIDATED AIRCRAFT CORP. BUFFALO, N. Y.
STAMP PT. No. WHERE SHOWN

NAME LEG (FURNISH) BUNK INNER TELESCOPING
OPP. HAND
SIZE D DWG. 22F049

SULLIVAN-McGREGOR CO., INC. BUFFALO
IMPERIAL TRACING CLOTH

OPPOSITE HAND							
DRAWING APPLIES ON:				DETAIL PARTS PER ASSEMBLY:			
AIRPLANE MODEL	ASSEMBLY NUMBER	NO. PER ASSY	NO. PER AIRPLANE	STANDARD PARTS	NO. REQ'D	PART NUMBER	NO. REQ'D

(10) TUFTING

A

A

C

PRESERVER

4 3/4

3/4

1 1/2

1 1/2

1 1/2

1 1/2

16

14 1/2

14 1/2

29 1/2

2 1/2 (APPROX.)

(8) 1 1/2 WIDE x 1/8 THICK BLACK COTTON WEBBING - SERVE ENDS BY DIPPING IN SHELLAC - SPEC. COMM.

(K) (25) ASS'Y. WITH RUSSIAN WORDING

(J)

(20) ASS'Y

(29) MAT'L NOTED *

NOTE: THIS ASS'Y IS SIMILAR IN EVERY DETAIL TO P2Y-2&3 ASS'Y, EXCEPT AS NOTED.

(5) FILL WITH KAPOK - SPEC. 2TK1 VOLUME 950 CU. IN.

STENCIL 2 WHITE LETTERS

(H) (3) COVERING TO BE: IMITATION LEATHER - BOETHING & DUNLAP #703 PE-13 OR EQUIVALENT MAT'L. NOTED *

(4)

(22) MAT'L. NOTED *

NAF # 26207 "LIFT THE DOT" FEMALE FASTENER CLINCH PLATE ON BOTTOM. P2Y-2&3 ONLY

1" 2

1/4

2

1/4

1"

(2) MAT'L. SAME AS -3

(9) THESE TABS TO BE 1/16 THICK FINE GRAIN BLACK LEATHER SPEC. 34L-3 P2Y-2&3 ONLY

B

B

NAF 26207 "LIFT THE DOT" FEMALE FASTENER CLINCH PLATE ON OUTSIDE P2Y-2&3 ONLY

1/4

1"

1/4

VIEW AT C
SCALE 2/1

NOTES:

1- ALL THREAD TO BE BLACK COTTON #8 TO NAVY SPEC. 49T3a - USE AS SMALL A STITCH AS IS PRACTICAL.

* 2 - MATERIAL FOR -4, -7, -22 & -23 (L) TO BE ARTIFICIAL LEATHER, SPEC. E-KK-L-136, TYPE 3, CLASS B, BLACK.

SECTION A-A
SCALE 2/1

1/2 1

1/16

3/16

1/4

ALTERNATIVE SEAM MAY BE USED

1/4

1/8

(6) WELD CORD 3/16 DIA

VIEW AT "B"

SCALE 2/1

(7) MAT'L. NOTED * ALTERNATIVE SEAM MAY BE USED

-30	P2Y-1 M	28F6003	1	1			-10	AS REQ
-20	P2Y-2 M	28F7002	1	1			-9	4
	P2Y-3 M	28F8003	1	1			-8	2
-30	P2Y-1 M	28F5502	1	1			-7	AS REQ
	P2Y-1 M	28F3502	1	1			-6	" "
	P2Y-2 M	28F5502	1	1			-5	" "
	P2Y-3 M	28F3502	1	1			-4	4
-20	P2Y-1	28F6002	1	1			23	1
	P2Y-2	28F7002	1	1			22	1
	P2Y-3	28F8002	1	1				
	P2Y-4	28F1002					-10	AS REQ
-25	P2Y-2	28F1002 R	2	2			-9	4
-20	P2Y-3	28F1002	1	1			-8	2
	P2Y-2	28F7002	1	1			-7	AS REQ.
	P2Y-1	28F6002	2	2			-6	AS REQ.
	XP2Y-1	28F6002	4	4			-5	AS REQ
	XP2Y-1	18F613	2	2			-4	4
	P2Y-3	22F1500	4	4	P2Y-2&3 ONLY		-3	1
	P2Y-2	22F1424	4	4	P2Y-2&3 ONLY		-2	1

(K) -25 ASS'Y

(J) -20 ASS'Y.

PURCHASE TO DWG.

NAVY APPROVED	DATE
	2-27-36

CALC. WT.	ACT. WT.	AIRPLANE MODEL	ASSEMBLY NUMBER	NO. PER ASS'Y	NO. PER AIRPLANE	STANDARD PARTS	NO. REQ'D	PART NUMBER	NO. REQ'D
4 lbs.	...								

SCALE 1/4, 2/1 — DRAWING APPLIES ON: — DETAIL PARTS PER ASSEMBLY:

MATERIAL	MIXED	DRAFTSMAN	10-30-37
SPEC'S. AN NO.:	"	STRENGTH & WT. EXAM.	
HEAT TREAT	NONE	CHECKED	
FINISH	"	APPR'VD. & REL'S'D.	

CUSHION - FURNISH - LIFE PRESERVER

CONSOLIDATED AIRCRAFT CORPN. DR'W'G. No. 22F[illegible]

LET.	CHANGED	DATE	CH. BY
L	ADDED NOTE *2-MATERIAL--BLACK: MAT'L OF -4, -7, -22 & -23		
	WAS SAME AS -3 WT. CHG. REQ.	10-20-42	HARRIS
	ADDED. WORDING & COMM. # 2 REQ.		
K	-25 ASS'Y WITH RUSSIAN		
	-23 WERE -2 & -3 RESP.		
J	-20 ASS'Y REVISED - -22 &	11/4/37	CHANDLER
I	ADDED QTY AND ASSY	9-17-37	[illegible]
	NO. FOR P2Y-1 & 3		
H	-3, -4, -22 -2 WERE BLACK PIGSKIN	6-29-36	ARRIS
G	TRACED UP TO DATE	3-19-36	K.R.T.

LET	ALTERATION	DATE	BY
H(—)	XPBZY-2 PB2Y-2R (WT. CHG. NEG.)	4-15-42	[illegible]
J	[illegible] BUSHING -10 FOR XPBZY-2		
	PB SHACK LTD WT. RELEASED		
	-20 FOR PBZY-5 FOR NYLON		
	PB WT. CHG.	5-8-42	LACOM

SUPPLIES & EQUIPMENT CLASSIFICATION			
LET	ALTERATION	DATE	BY
A	TRACED UP TO DATE	4-6-39	[illegible]
B	PBZY-1 ADDED	10-26-39	JAMES
C	PBY-1 NEXT ASSY. 28F1350 WAS 28F1316	8-9-41	C.K.S.
D	PART-10 FOR XPBZY-1 ADDED	5-18-42	[illegible]
E	CREATED -11 ASSY. ADDED -6 K13624 X9½ & -7 MAKE FROM K781-½ X1X3. FINISH Z-P-2GP WAS Z-P-2AKV & 1GP WAS 1AKV. WT. BAL. FOR -11 ASSY. ADDED PBY-5-5A	10-9-42	[illegible]
	28-5 MN & AMN. REQ'TS, [illegible]		
F	CREATED -20 ASSY. SAME AS -0 ASSY EXCEPT 22F1596-10 REPLACES 22F1596. IN REQ'TS PER PLANE ADDED -20 ASSY FOR PBY-5 C=91876 F=3344 ON NEXT ASSY 28E1350(A) PBY-5A C=NX31395 NEXT ASSY 28E1350(), WT. CHG. NEG.	3-16-43	[illegible]
G	CHG'D C=91876 F=339 FROM TO C=91876 MCR 158-(1) FOR -20 PBY-5 NOW C=NX31359 ADDED MCR 158(2) NO WT. CHG.	8-16-43	[illegible]
H	ON FACE FOR -21-3, REPLACED "[illegible]" ALUM. ALLOY ANGLE SPEC. 46A9 COMP. T. ALCOA DIE K5401" WITH "MAKE -21-3 FROM Y-2-A2T.R.T." ADDED REQ'TS FOR PB2Y-2		

E.O. A6W2061A

(-4) .064 ALUM ALLOY SH. 1 x 5 5/16 LONG SPEC. 47A10 HEAT TREAT 3RS3 FINISH Z-P-2AKV

NOT MORE THAN 1/16

AC425-D4

AN442-D4

AN442-D4

#10(193) DRILL 4 HOLES

AN442-D4

SYMMETRICAL ABOUT ℄

PICK UP RIVETS IN -3

AC425-D4

(-2) L.H. (-3) R.H.

(H) MAKE -2 & -3 FROM Y-2-A2T.R.T.

FINISH Z-P-2GP

(-7) (REF)

(-6) (REF)

℄ OF BOTTLE

(E) MAKE FROM K781 ALC. 46A9-T

(E) K13624 X9½ ALC. 46A9-T

22F1595

22F1596
22F1596-10
(F)

DRILL #10(.193) 4 HOLES

NOTE:
ASSY-10 & -11 IS IDENTICAL TO 22F1994 WITH EXCEPTION THE LOCATION OF THESE 4 HOLES.

NOTE:
WT. -0 & -10 - .76#
WT. -11 = .89#

ASSY FINISH IGP EXCEPT WEBBING & FELT WASHER

(E) 22F1594-10 & 11 (D)

NO. (S) 1ST SHIPS	ITEM	MODEL	NEXT ASSY.	REQ.	REQUIREMENTS PER AIRPLANE	MAT.	PARTS LIST PER ASSY.	REQ.	PART NO.	REQ.
		PB2Y-3R	29F3468	1						
-20		PB2Y-3	29F3468	1						
		XPB2Y-3	28F3468	1						
		PB2Y-2	28F2455	1						
		PB2Y-2	28F1417	1						
		PB2Y-2	29E1176	1						
MCR1583 → -20		PBY-5A	28E1350	1						
MCR1584 → -20		PBY-5	28E1350	1						
		XP4Y-1	31F3053	1						
C=70496 → -11		PBY-5A	28E1350	1						
ALL -11		PBY-5		1						
ALL -11		28-5 AMN		1						
		28-5 MN		1 EA.						
		28-5 MANC		1 EA.						
		PBY-5A		1						
		PBY-5&5A	28E1350	1 EA.	AC425-D4					
-10		PB2Y-3	29F3468	1	AN442-D4					
		PBY-4	28F1350					-7		
		PBY-3	28F1350					-6		
		PB2Y-2	28F1350		22F1596-10	1		22F1596	1	
-10		PB2Y-1	29F1150		22F1595	1		22F1595	1	
		PBY-1	28F1350		-4	1		-4	1	
		XPBY-1	28F126		-3	1		-3	1	
		P2Y-3	22F1533		22F1594-2	1		22F1594-2	1	

FINISH CODE	
Z	ANODIC TREATMENT
P	P-27 PRIMER
AP	ALUMINIZED PRIMER
C	CADMIUM PLATE
GP	GREEN PRIMER

REPLACES			
REPLACED BY			
LIMIT ON DIMENSIONS UNLESS OTHERWISE SPECIFIED + −			
[redacted]			
APPROVED JCW 10-30-36 DATE			
NOTED CALC. WT. ACT. WT.			
SCALE 12" = 1'0"			
AC			
NAVY NOTED	NOTED	NOTED	NOTED
MATERIAL	SPEC.	HEAT TREAT	FINISH

CONSOLIDATED AIRCRAFT CORP. BUFFALO, N. Y.

STAMP PT. No. WHERE SHOWN

DRAFT	
CHECK	
EXAM.	
ENG.	

NAME: BRACKET ASS'Y - FURNG'S FIRE EXT. BOTTLE

OPP. HAND

DWG. D 22F1594

SUPPLIES & EQUIPMENT CLASSIFICATION			
LET	ALTERATION	DATE	BY
A	TRACED UP TO DATE	9-25-35	[illegible]
B	PBY-1 ADDED; NAVL WAS 1130	10-28-35	[illegible]
C	ADDED SEC. A-A	2-10-36	[illegible]
D	ADDED AC. MAT & FINISH SPEC.	9-24-36	[illegible]
	ADDED REQ. FOR B-24 A, C, D &		
	X-B30 MODELS		
E	11067 TYPE I ARMY SPEC		
	WAS 57-152-6 TYPE I		
	NO WT. CHG.	9-24-36	R.H.M.
F	ADDED REQ'MTS. FOR B-24		
	NO WT CHG.	9-24-36	R.H.M.

E.O. A-3784-1A

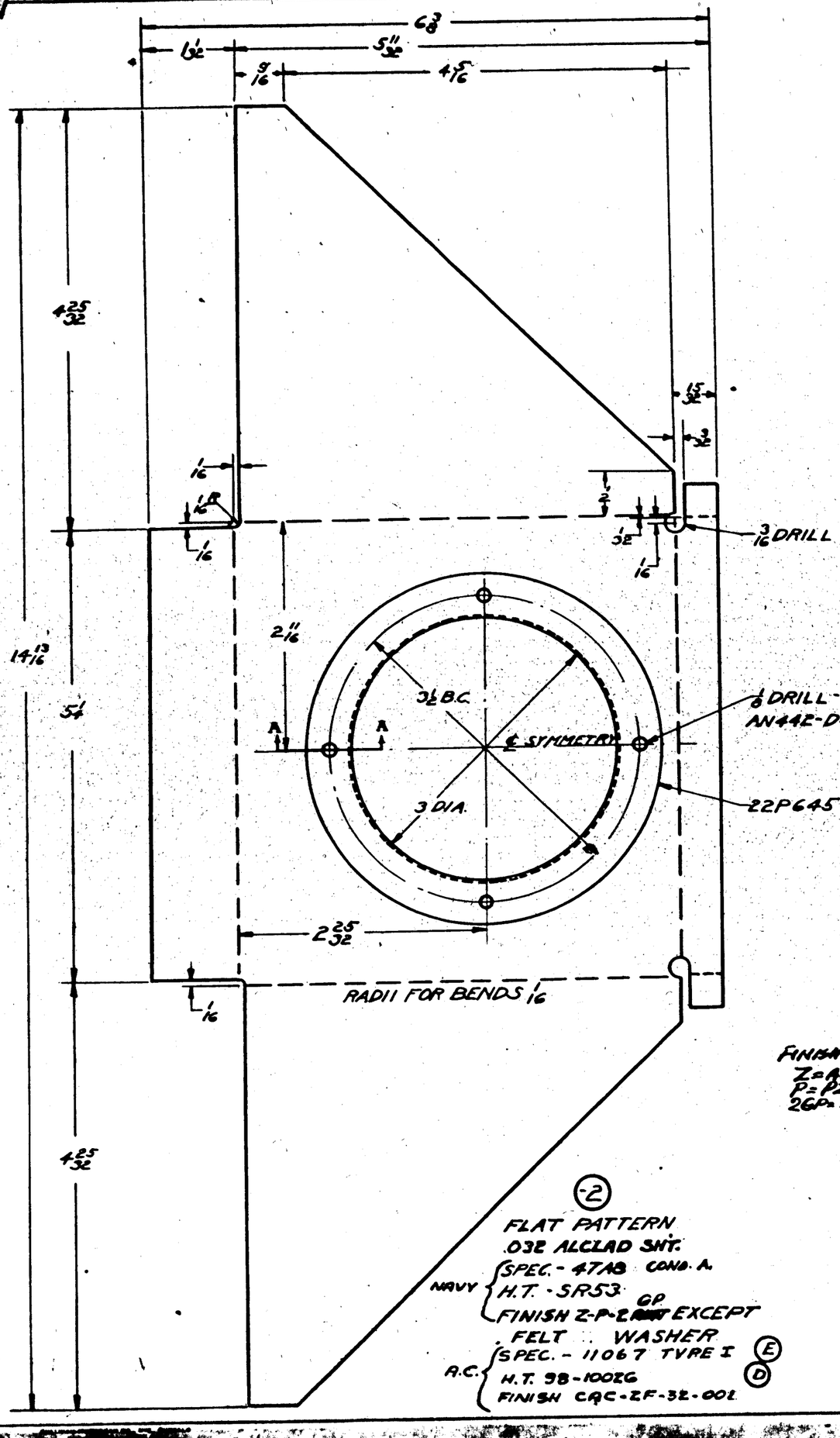

SECTION A-A

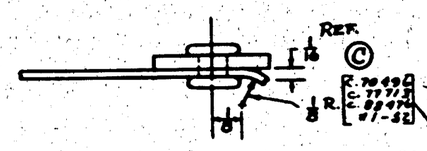

SCALE: 24"=1" CENTER TO CEN.

FINISH CODE:
Z = ANODIZE
P = P27 PRIMER
2GP = 2 GREEN PRIMER

-2

FLAT PATTERN
.032 ALCLAD SHT.

NAVY { SPEC. - 47A8 COND. A.
H.T. - SR53
FINISH Z-P-2 GP EXCEPT
FELT WASHER

A.C. { SPEC. - 11067 TYPE I (E)
H.T. 98-100 ZG (D)
FINISH CAC-ZF-32-001

O.H.	MODEL	NEXT ASSY.	REQ.	STD PARTS	RH REQ.	PART NO.	LH REQ.
	F-2 A-B	28F127	2				
	PBY-5 A	28F127	1				
	PBY-5 A	22F1594	1				
	PBY-5	28F127	1				
	PBY-5	22F1594	1				
	PBY-5	28F127	1				
	PBY-5	22F1594	1				
	PBY-5	28F127	1				
	PBY-5	22F1594	1				
	PBY-5A	28F127	2				
	PBY-4	28F127	1				
	PBY-4	22F1594	1				
	PBY-4	28F127	1				
	PBY-4	22F1594	1				
	PBY-5A	28F127	2				
	PBY-5	28F127	1				
	PBY-5	22F1594	1				
	PBY-6A	28F127	2				
	PBY-6A/B/C	28F127	2				
X	PBY-6A	28F127	2				
	PBY-6	28F127					
	PBY-6	22F1594					
	PBY-3	28F127					
	PBY-3	22F1594					
	PBY-2	28F127					
	PBY-2	22F1594					
	PBY-1	28F127					
	PBY-1	22F1594					
	XPBY-1	28F127	1				
	XPBY-1	22F1594	1				
	PBY-3	22F1597	1	AN442-D3		22P645	1
	PBY-3	22F1594	1	AN442-D4		22F1595-2	1

REQUIREMENTS PER AIRPLANE			MAT.	PARTS LIST PER ASSY.
NOTED	NOTED		NOTED	
SPEC.	HEAT TREAT		FINISH	

REPLACES	
REPLACED BY	
LIMIT ON DIMENSIONS UNLESS OTHERWISE SPECIFIED	± 1/32
APPROVED	10-30-35 DATE
CALC. WT. .182	ACT. WT.
SCALE 12" = 1:0"	
AC NOTED	
NAVY NOTED	
MATERIAL	

CONSOLIDATED AIRCRAFT CORP. BUFFALO, N.Y.

STAMP PT. No. WHERE SHOWN

NAME BRACKET - FURN'G'S FIRE EXT. BOTTLE

DRAFT [illegible] CHECK [illegible] ENGR. [illegible]

OPP. HAND [illegible]

SIZE D 22F1595

LET	ALTERATION	DATE	BY
F	TO ASM. ADDED "2BP5181 (1 REQ. L.H.); AT		
	2BP5181 & 22P642, ADDED "(SEE NOTE L)".		
	TO FACE, ADDED NOTE 1: AT CALL OUT OF		
	22P648 HOOK, ADDED "(SEE NOTE L)" &		
	"2BP5181 (SEE NOTE T)". NO WT. CHG.	9-16-9	MMR

E.O. 17007

E.O. 15247

SUPPLIES & EQUIPMENT CLASSIFICATION		
LET	ALTERATION	
A	TRACED UP TO DATE	
B	PBY-1 ADDED; MATERIAL 1750	
C	MAT'L WAS 24ST, WT -3	
D	PBY-1 ASSEMBLY-DEPTH ADDED.	4-1-38
E	FINISH WAS Z-BAKY	4-1-38
F	ADDED LINKS & 2 REQ TO CREW TANKS	
G	ADDED PBY-2 & 3 REQ'S	9-29-37
H	CHANGED (-4) TO .030 AL. ALLOY STRIP	
	47A10 T. WAS .030 AL. AL. STRIP &	6-9-37
I	MAT. PER -3 (AN 261-0-1) WAS	
	1 1/16 x .045 ALUM ALLOY SPEC COMM.	
J	PIANO HINGE - 1" LONG	1-8-40
	Q4303-AD4 WAS Q4301-D4	
	C'SINK. INSIDE STRAP ADDED	12-2-40
K	ADDED AC MAT. & FINISH SPEC.	9/14/41
	ADDED REQ. FOR BM A.C.D &	
	L830 MODELS	
	CHANGED -2 & -4 MAT'L. FROM	4-14-42
	AL. ALLOY TO ALCLAD	
M	ADDED LENGTHS FOR -5 & 7, FOR -6,	
	4 3/4 WT. CHG. NEG.	9-23-42
N	-700 & -701 WAS -4 WT CHG NEG.	9-23-42
P	-7-8-9 WAS AN 251-0-1 WT CHG NEG.	9-23-42
Q	CHANGED -10 ASSY. SAME AS -0	
	ASSY. EXCEPT ADD R & R PARTS	
	TO AGREE PER PLANE ADDED	
	-10 FOR PBY-5 NEXT ASSY.	
	22F1594 C"9187L" 17L4 ON	
	ADDED -10 FOR PBY-5A NEXT	
	ASSY 22F1594 C"NX13558	
	AND WT CHG.	9-29-38
R	TO DWG WAS 5/16" Rivets 5/8 GRIP	
	IN -10 ASSY REMOVED 5/8 RIVETS	
	& REPLACED WITH 5/8 RIVETS.	
	FOR -10 CHG'D B DIA FROM	
	33/32 TO 9/16, R DIA. FROM 5/8	
	TO 1/8 CHG'D C"9187L" 17L4	
	ON TO MCR 158-1. CHG'D	
	C"NX13558 TO MCR 158-2.	
	WT CHG NEG.	10-28-38
S	ADDED REQ'S TO SHOW ASSEMBLY	
	CHANGE -10 FROM MCR 158-1	
	TO 158-2	8-11-39

(-2) STRAP
.064 ALCLAD SHT.
NAVY SPEC. 47A8 COND A. A.C. SPEC 57-132-C TYPE I
H.T. SR53 H.T. 98-100 2G (K)

(N) (-700) MAKE FROM (-4) STRAP - .030
ALCLAD SHEET
(N) SPEC. 47A8 COND. T. (NAVY) (K)
A.C. SPEC. 57-132-C TYPE II

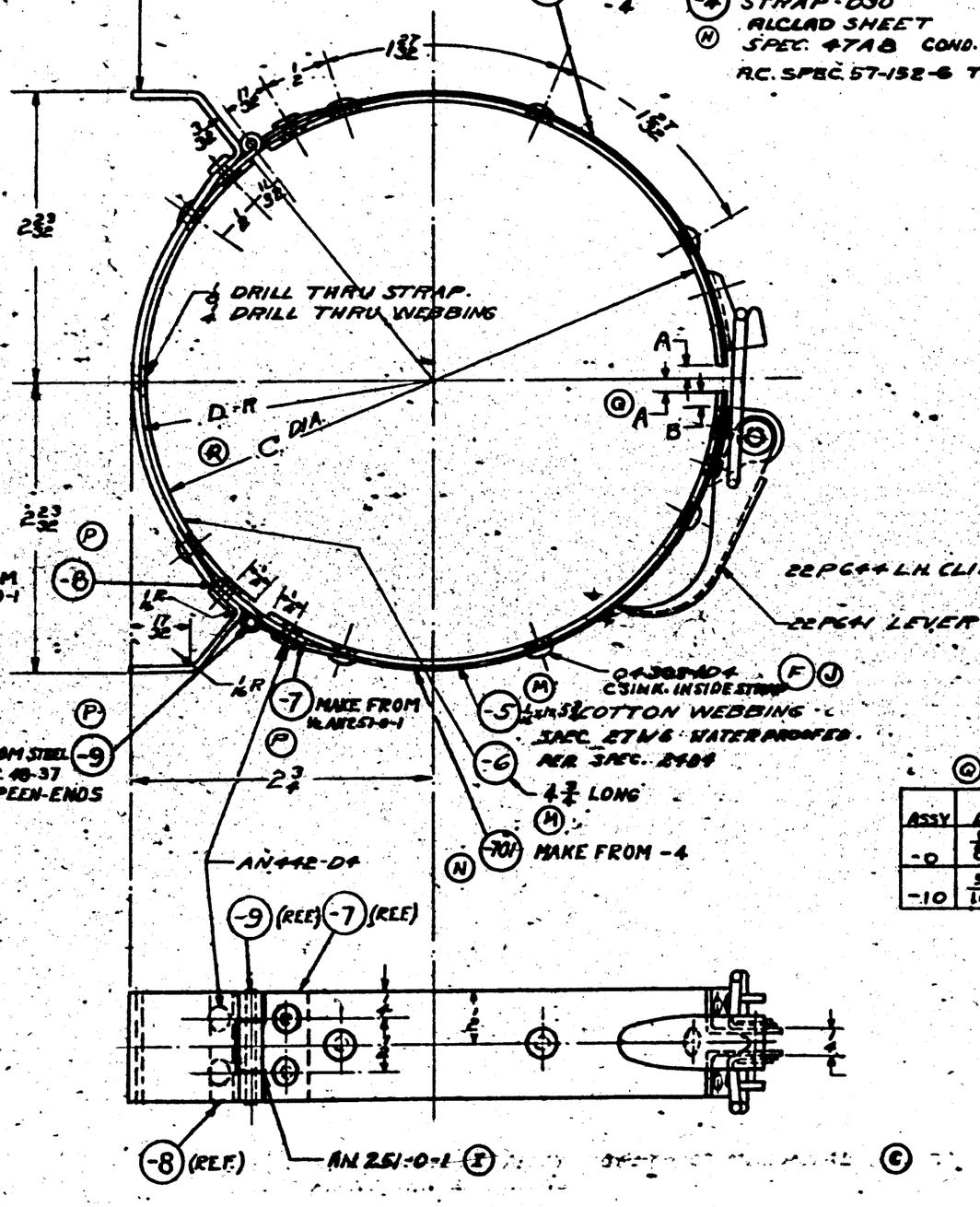

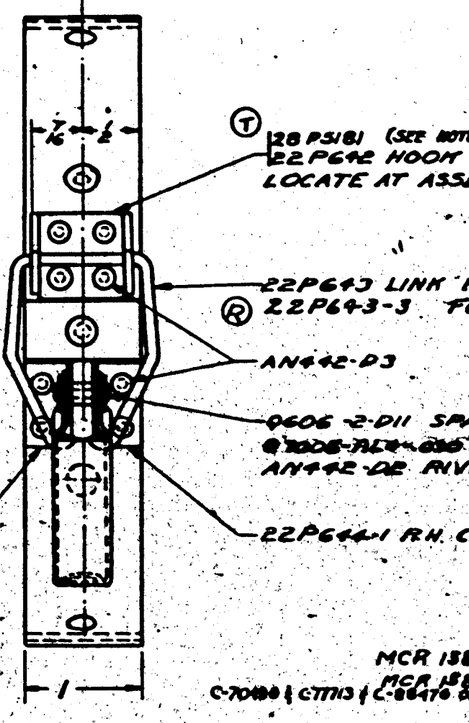

(Q) ASSY	A	B	C	(R) D
-0	1/8	1/8	5 7/16	2 11/16
-10	5/16	1/8	5 3/8	2 3/4

-10	PBY-5	22F1594	1
-10	PBY-5A	22F1594	1
	PBY-5A	28F1594	1
	PBY-2A	28F127	2
	PBY-2B	22F1594	1
	PBY-3B	28F127	1

MCR 158-1
MCR 158-2
C-70486 & C-71113 & C-8646 SALV

FOR FURTHER RELEASES SEE RELEASE SHEETS

-10	PBY-5	22F1594	1
	PBY-5	28F1594	1
	PBY-5	28F127	2
	PBY-5	22F1594	1
	PBY-5	28F127	2
	PBY-4	28F5078	2
	PBY-4	22F1594	1
	PBY-4	28F127	2
	PBY-3	28F2028	1
	PBY-3	28F127	1
	PBY-3	28F1894	1
	PBY-2	28F2028	1
	PBY-2	28F127	1
	PBY-2	28F1894	1
	PBY-1	28F127	1
	PBY-1	28F1894	1
	PBY-3	28F1897	1
	PBY-3	28F1894	1

							2BP5181	1	
							22P643-3	1	
							-10	2	
							-10	2	
							-10	2	
							-10	2	
							-10	2	
							-10	2	
							-10	2	
							-10	2	
							22P644	1	
							-10	1	
							-10	1

LET	ALTERATION	DATE	BY
H	IN B/M FOR STD PARTS, ADDED "Q1601-135" "Q1601-10" "Q1601-185" "Q1601-20" & "SEE NOTE." ON FACE, REPLACED CALLOUT "AC225-1" & "AC225-5" WITH NOTE.		
	NO WT. CHG.	9-20-41	HOBK

SUPPLIES & EQUIPMENT CLASSIFICATION			
LET	ALTERATION	DATE	BY
A	TRACED	11-3-41	[illegible]
B	"DOUBLE" REMOVED, COTTON WEB LINEN THREAD	4/29/42	[illegible]
C	REMOVED -1 PATTERN REMOVED -3 FROM DRWG & NEW REPLACED. ADDED NOTE "ALL DIM. APPROX. STITCH MAY VARY TO FACILITATE MFG"	6-12-42	[illegible]
D	ADDED -3 REQ. SAME AS -2 EXCEPT REMOVE WORDS "CONDUIT DIAGRAM", D-21-A "21 TO "29 INCL.	6-13-41	[illegible]
E	CREATED -4 ASSY. WT. CHG. NEG. E.O. A39676	5-2-42	CLARK
F	CHG'D -2 & -11 MAT'L FROM "20 OZ. WATERPROOF DUCK" TO "8 OZ. WATERPROOF DUCK". WT CHG NEG	5-2-42	CLARK
G	ADD NOTE: "MAT. FOR -2, -3, -11 -- C.C. FAIL TO" ADDED NOTE: "MAT. FOR -2, -3, -11 TO BE C.A.C. F.S.B. #6-20, 8 OZ. DUCK TREATED IN ACCORDANCE WITH NAVY SPEC. 2404. WT. CHG. NEG.	6-12-42	[illegible]

NOTE:
(H) Q1601-135 & Q1601-10, OR AC225-1 FAST (FEMALE) Q1601-185 & Q1601-20, OR AC225-5 -FAST (MALE) (C)

½ BLOCK LETTERS STENCIL ON WITH BLACK ENAMEL

RADIO DIAGRAM
WIRING DIAGRAM
CONDUIT DIAGRAM
INTERPHONE DIAG.

(-2) (FOR -0 ASSY)
(-11) (FOR -4 ASSY)

(D) (-3) SAME AS -2 EXCEPT REMOVE WORDS "CONDUIT DIAGRAM". WORDING TO BE AS SHOWN ON SKETCH BELOW.

D	RADIO DIAGRAM WIRING DIAGRAM INTERPHONE DIAG.

SECTION A-A
SCALE 12"-1'0"

(E) (-11) (-2) (-0 ASSY ONLY)

1⅜ (FOR -0 ASSY ONLY)
2¾ (-4 ASSY ONLY)

SECTION B-B
SCALE 12"-1'0"

NOTE:-
ALL SEAMS AND HEMS TO BE STITCHED WITH COTTON THREAD SPEC. VT 276a. (B)

NOTE:-
(F) MATERIAL FOR -2, -3, -11 TO BE C.A.C. F.S.B. #6-20, 8 oz. DUCK TREATED IN ACCORDANCE WITH NAVY SPEC. 2404.

(G) C.C. FAIL TO

NOTE: ALL DIMENSIONS ARE APPROX. (C)
STITCHING MAY VARY TO FACILITATE MFG

SHIPS #1610 ON	-5	28-5AAN	28F294	1								
	-4	PBY-5B	28F294	1								
C8847G - SHIPS #3340 ON	-4	PBY-5A	28F294	1								
C91876 - SHIPS #3140 ON	-4	PBY-5	28F294	1								
	-5B	28-5AAN	28F294	1								
SHIPS #1-150		PBY-5B	28F294	1								
		28SAE/AMC	28F294	1EA								
		28SAA/AMC	28F294	1EA								
C10496, T7713 & 8851G #1-52		PBY-6B	28F294	1								
(D) #21 TO #29 INCL.	-3	D-21-A	32F1876	1								
C10496 & 91876 #1-90		PBY-5	28F294	1								
		PBY-4	28F294		Q1601-20	W	1					
		PBY-3	28F294		Q1601-135	S	1	1				
		PBY-2	28F294		Q1601-10	S	1	1				
		PBY-1	28F294	1	Q1601-185	S	1	1				
		XPBY-1	28F294	1	AC225-1		1	1		-11	1	(C)
		PBY-3	28F1745	1	AC225-5		1	1		-2	1	
	LET	O.H.	MODEL	NEXT ASSY.	REQ.	STD PARTS	-0	-4	PART NO	-0	-4	

REPLACES	APPROVED 5-29-36 DATE		
REPLACED BY	.214 CALC. WT. / ACT. WT.		
LIMIT ON DIMENSIONS UNLESS OTHERWISE SPECIFIED ±	SCALE 6"-1'0" & NOTED	REQUIREMENTS PER AIRPLANE	MAT. / PARTS LIST PER ASSY.
[redacted]	AC		
	NAVY NOTED	NOTED / NONE / NOTED	
	MATERIAL	SPEC. / HEAT TREAT / FINISH	DRAFT / CHK. / EXAM. / ENG.
CONSOLIDATED AIRCRAFT CORP. BUFFALO, N. Y.	STAMP PT. No. WHERE SHOWN	NAME: POCKET-FURNISHINGS ELECTRICAL DIAGRAMS	OPP. HAND / SIZE D / 22F1744

SUPPLIES & EQUIPMENT CLASSIFICATION			
LET	ALTERATION	DATE	BY
C	TRACED TO DATE	4-8-39	H.W.
D	-2 WAS 24 ST. ALLOY. 24 SO	12-5-39	[illegible]
E	1⅛ DIM. WAS 15/16. 1 WAS 1		
	DASH NO.S -5, -6L, & -6R WERE		
	-2, -3 & -4 RESPECTIVELY	1-19-42	[illegible]

E.O. A2116G

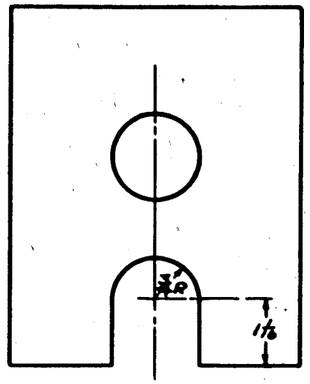

BLANK OF -2
D40 ALUM. ALLOY SHT. 24 ST.
SPEC. 47A.10. COND. T.
(A)

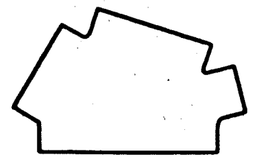

BLANK OF -3 AND -4
D40 ALUM. ALLOY SHT. 24 SO.
SPEC. 47A10 COND. A.

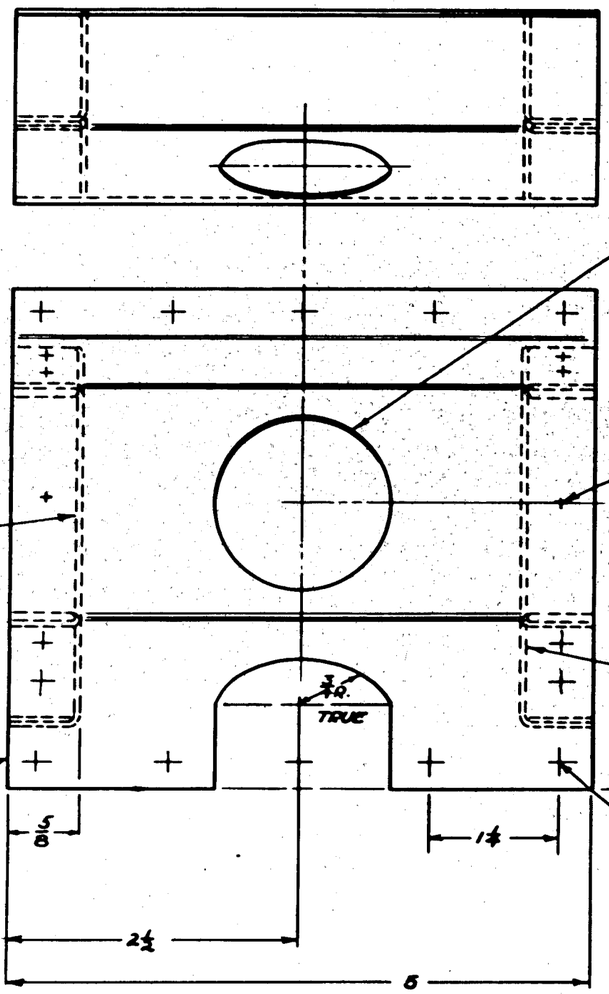

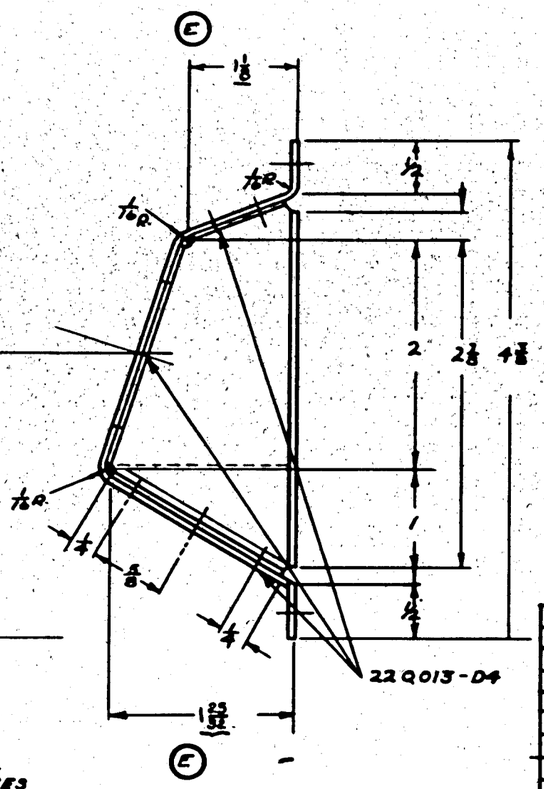

GP- GREEN PRIME

	28-5AMH	28A1006	1							
	28-5AMC		1							
	28-5MH		1							
	28-5ME		1							
	28-5MC		1							
	28-5MA		1							
	PBY-5B	28A1006	1							
	PBY-5A	28A1006	1							
	PBY-4	28A1006	1							
	PBY-3	28A1006	1							
	PBY-2	28A1006	1					28F078-6L	1	
	PBY-1	28A1006	1					28F078-6R	1	
	XPBY-1	28A1006	1	22Q013-D4	12			28F078-5	1	
O.N.	MODEL	NEXT ASSY.	REQ.	ST'D PARTS	LH REQ.	RH REQ.	PART NO.		LH REQ.	RH REQ.

REQUIREMENTS PER AIRPLANE — MAT. TYPE III — PARTS LIST PER ASSY.

REPLACES	APPROVED	DATE
REPLACED BY	.178 CALC. WT.	ACT. WT.
LIMIT ON DIMENSIONS UNLESS OTHERWISE SPECIFIED ± .010	SCALE 12"=1'-0"	
[redacted]	NAVY NOTED	NOTED
	MATERIAL	SPEC.

30-53g — 2-3AMV — HEAT TREAT — FINISH

G.A.W.		R.	
4-5-39	5-15-39		
DRAFT	CHECK	EXAM.	ENG.

CONSOLIDATED AIRCRAFT CORP. BUFFALO, N. Y.

STAMP PT. No. WHERE SHOWN

NAME: BRACKET FURNISHINGS TYPE N2 FLARE RELEASE HANDLE

OPP. HAND

SIZE D — DWG. 28F078

SULLIVAN-SCHEDGAM CO., INC. BUFFALO
IMPERIAL TRACING CLOTH

SUPPLIES & EQUIPMENT CLASSIFICATION			
LET	ALTERATION		BY
	ORIGINAL.		
E.O.26436	A	TILTED -4 & SEC. B-B FROM HORIZ. @ 11-8-44 TO 11°∠ & CHGD. 1 5/16 & 2 5/8 DIM.S & -3 TO 7/8 & 2-1 RESP.	
PBY-5	E	ADDED .040 AL. AL. SHT TO -4	11-18-44
	G	CORRECTED -8 & -2 TO SCALE. PER	
PBY-5		CHANGE "F" & REPLACED 22B013-D4 WITH Q4303-D4	
E.O.C. 15490	H	CHG'D. DWG. & NOTE IN SEC. "B-B" FROM Q4303 D4 FLUSH ON BOTH SIDES TO FLUSH ON INSIDE ONLY, ON DWG. 1/8 DRILL 22B013-D4 18 HOLES TO DRILL #30(.1285) Q4303-D4 18 HOLES	3-29-44
	J	IN DRILL NOTE, AN442-D4 WAS Q4303D4.	1-14-45
	K	CHG'D NOTE "DRILL #30(.1285) AN442-D4 TO "AN442-D4 RIV. 8 PLACES" & "Q4303-D4 FLUSH ON INSIDE ONLY" TO "Q4303-D4 RIV. CT'SK INSIDE 4 PLACES"	1-14-45
E.O. 22912	L	CHG'D NOTE AT SECT. B-B FROM "Q4303-D4 CT'SK. INSIDE 4 PL. TO "Q4303-D4 FLUSH ——— THRU -6 & -6" DIM. 1" WAS 13/16 & ADD 1/2 DIM. @ SECT. C-C	2-16-45

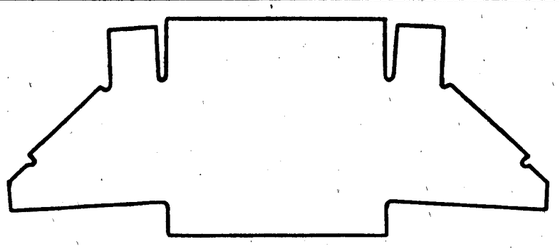

②

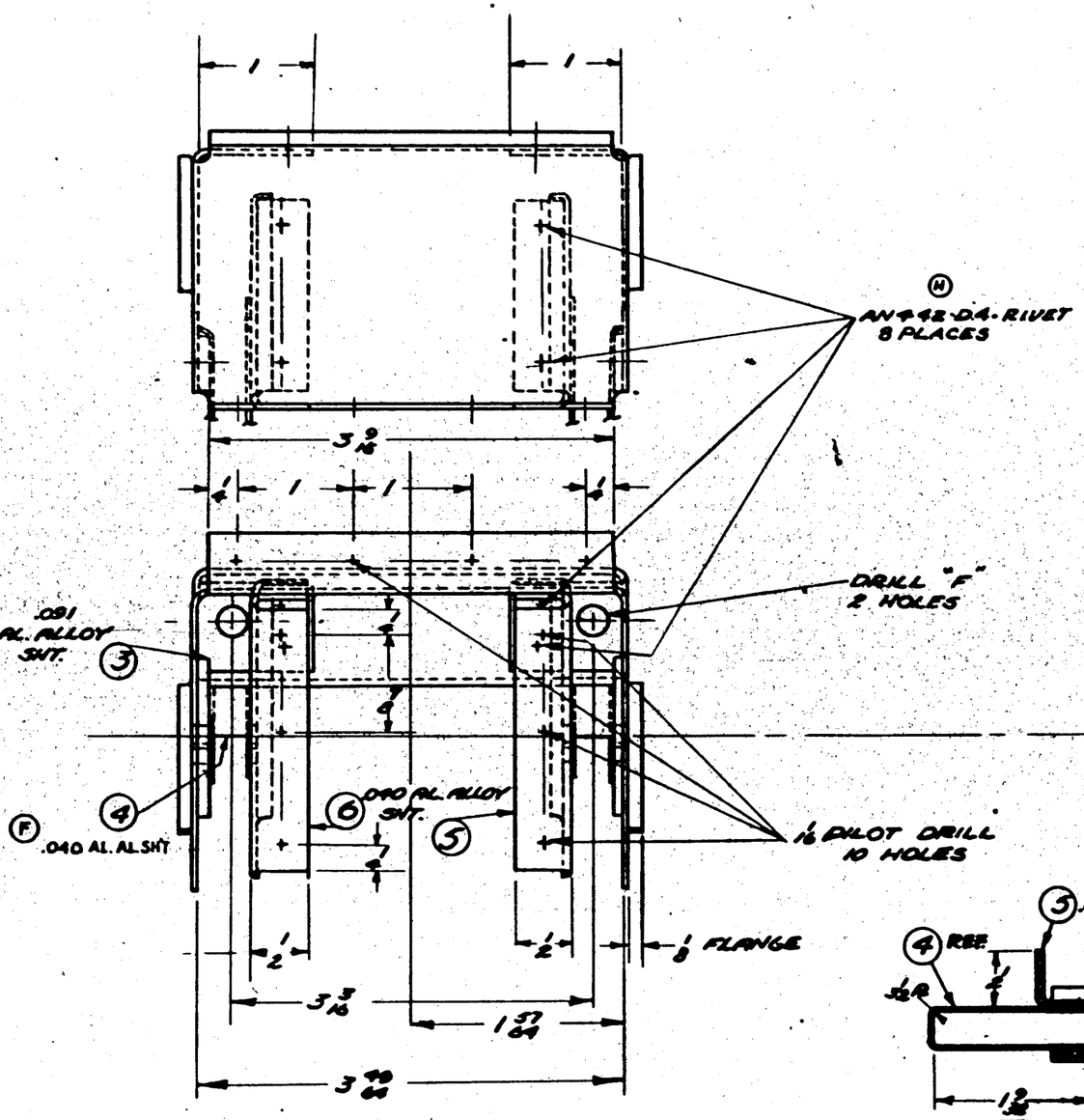

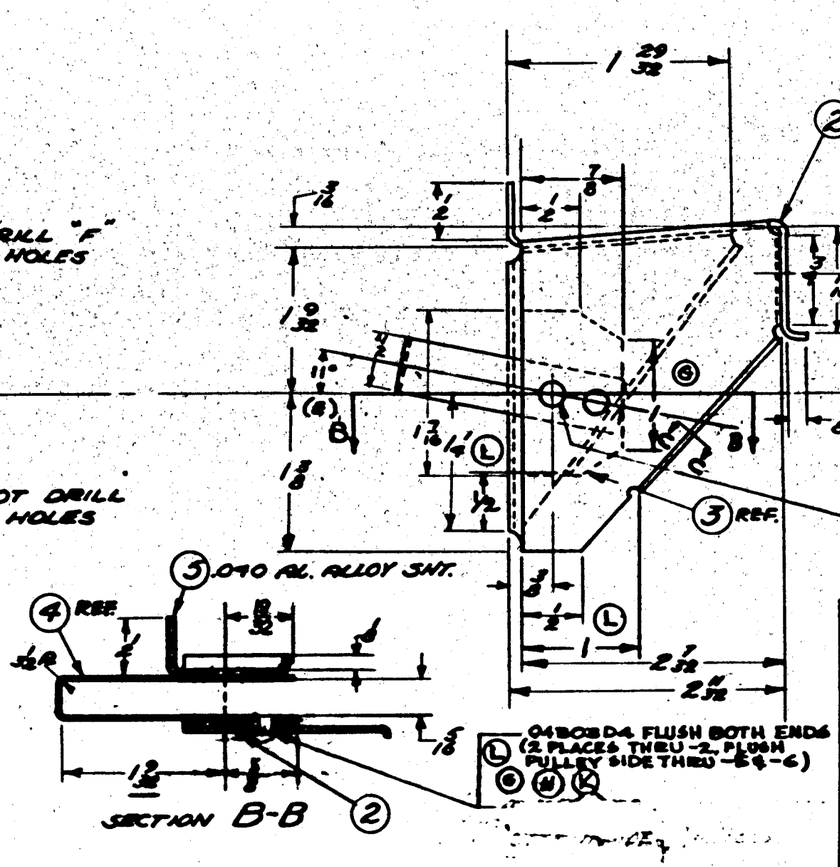
1 29/32
2.040 AL. ALLOY SHT.
DRILL #11 2 HOLES THRU
③ REF.
SECT. C-C
60°-90°
3 15/16
1 3/64
2 1/32
2 11/32
1/2
1
3/8
7/8
1/2
1/2
3/16
1 9/32
1 3/8
1 3/16
1 1/4
1/2
11°
3/16
1/2
3/8
1/2
1/2
3/8
1/2
1/2
3/16
1/2
3/16
1/2
3/16

SUPPLIES & EQUIPMENT CLASSIFICATION			
LET	ALTERATION	DATE	BY
D	[illegible]	[illegible]	[illegible]
E	CHANGED 1/8" BORE TO 1.626 [illegible]		
	DIMENSION 1 3/32 TO 1 1/32 [illegible]	6-11-37	Ashton
F	-3 ADDED. PBY-3 REQ'T ADDED	6-[illegible]-37	[illegible]
G	[illegible]	[illegible]	[illegible]
H	ADDED "21SK GROUND FLAT" TO DWG.	9-9-41	[illegible]
J	TO REQ'I AIRPLANE BLOCK ADDED		
	-3 - PBY-5A 28F7595-1 REQ. FOR		
	C. NO. 20)464, LIMITED REQ'S.	6-4-43	[illegible]
	FOR PBY-5A N/H 28F4055 TO		
	C/N 77713, 78476, 70496 ONLY.		
	NO WT. CHG.		
K	IN BIM REPLACED "AL. ALLOY CAST."		
	"M.186," 42,000 PSI. WITH "NOTED."		
	ADDED MATERIAL NOTE. NO WT. CHG.	9-27-43	[illegible]

BDC 11340 2nd Issue P
MAR 28 18-6

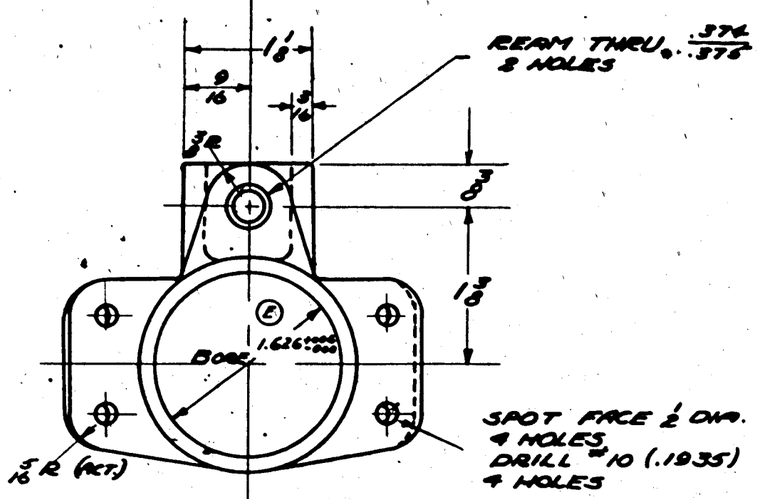

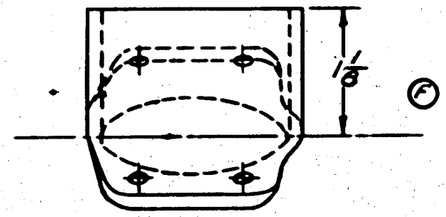

③ SAME AS -2 EXCEPT AS SHOWN

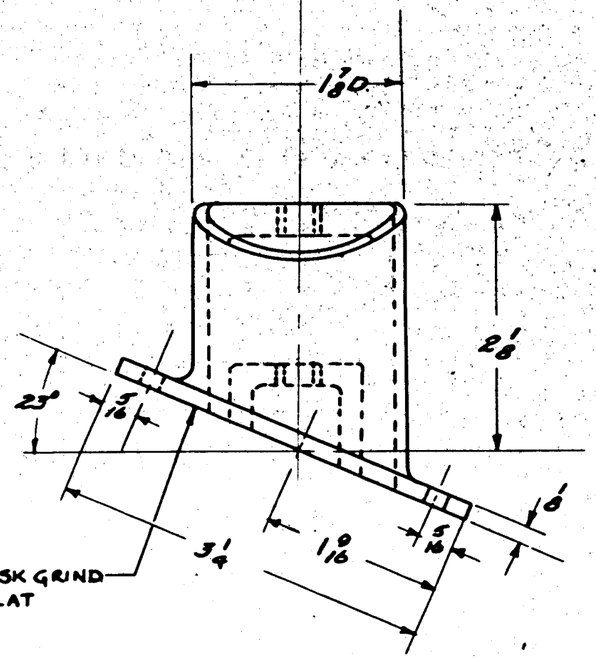

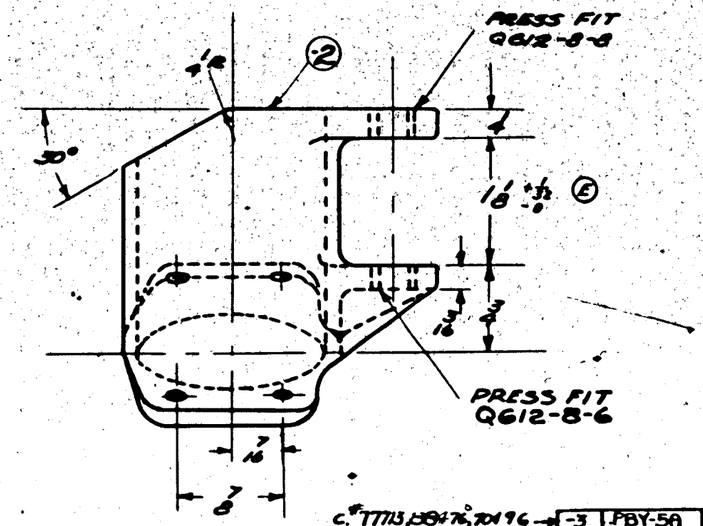

NOTE:
K 1 - MATERIAL FOR -2 & -3 MAY BE:
(A) AL. ALLOY CASTING, 220T4, SPEC. AN-QQ-A-392, T.S. 42,000 P.S.I, OR
(B) AL. ALLOY CASTING, 195T6, SPEC. AN-QQ-A-390, CL. II, T.S. 32,000 P.S.I.

ALL FILLETS 6 R

C/N 77713, 78476, 70496 — C/N 20) 464 PER 22-6-43

										Q612-8-8	1
										Q612-8-6	1
	-3	PBY-5A	28F4055	1							
	-3	PBY-5A	28F7595	1							
	-3	PBY-5A, 5A-1A, 5A-2A, 5A-3A, PBY-5, 5A-1, 5A-2, 5A-3, 5A-4, 5A-5, 5A-6, 5A-7, 5A-8, 5A-9, 5A-10, 5A-11, 5A-12, 5A-13, 5A-14, 5A-15, 5A-16, 5A-17, 5A-18, 5A-19, 5A-20, 5A-21, 5A-22, 5A-23, 5A-24, 5A-25, 5A-26, 5A-27, 5A-28, 5A-29, 5A-30, 5A-31, 5A-32, 5A-33, 5A-34, 5A-35, 5A-36, 5A-37, 5A-38, 5A-39, 5A-40, 5A-41, 5A-42, 5A-43, 5A-44, 5A-45, 5A-46, 5A-47, 5A-48, 5A-49, 5A-50, 5A-51, 5A-52, 5A-53, 5A-54, 5A-55, 5A-56, 5A-57, 5A-58, 5A-59, 5A-60, 5A-61, 5A-62, 5A-63, 5A-64, 5A-65, 5A-66, 5A-67, 5A-68, 5A-69, 5A-70, 5A-71, 5A-72, 5A-73, 5A-74, 5A-75, 5A-76, 5A-77, 5A-78, 5A-79, 5A-80, 5A-81, 5A-82, 5A-83, 5A-84, 5A-85, 5A-86, 5A-87, 5A-88, 5A-89, 5A-90, 5A-91, 5A-92, 5A-93, 5A-94, 5A-95, 5A-96, 5A-97, 5A-98, 5A-99, 5A-100, 5A-101, 5A-102, 5A-103, 5A-104, 5A-105, 5A-106, 5A-107, 5A-108, 5A-109, 5A-110, 5A-111, 5A-112, 5A-113, 5A-114, 5A-115, 5A-116, 5A-117, 5A-118, 5A-119, 5A-120, 5A-121, 5A-122, 5A-123, 5A-124, 5A-125, 5A-126, 5A-127, 5A-128, 5A-129, 5A-130, 5A-131, 5A-132, 5A-133, 5A-134, 5A-135, 5A-136, 5A-137, 5A-138, 5A-139, 5A-140, 5A-141, 5A-142, 5A-143, 5A-144, 5A-145, 5A-146, 5A-147, 5A-148, 5A-149, 5A-150, 5A-151, 5A-152, 5A-153, 5A-154, 5A-155, 5A-156, 5A-157, 5A-158, 5A-159, 5A-160, 5A-161, 5A-162, 5A-163, 5A-164, 5A-165, 5A-166, 5A-167, 5A-168, 5A-169, 5A-170, 5A-171, 5A-172, 5A-173, 5A-174, 5A-175, 5A-176, 5A-177, 5A-178, 5A-179, 5A-180, 5A-181, 5A-182, 5A-183, 5A-184, 5A-185, 5A-186, 5A-187, 5A-188, 5A-189, 5A-190, 5A-191, 5A-192, 5A-193, 5A-194, 5A-195, 5A-196, 5A-197, 5A-198, 5A-199, 5A-200, 5A-201, 5A-202, 5A-203, 5A-204, 5A-205, 5A-206, 5A-207, 5A-208, 5A-209, 5A-210, 5A-211, 5A-212, 5A-213, 5A-214, 5A-215, 5A-216, 5A-217, 5A-218, 5A-219, 5A-220, 5A-221, 5A-222, 5A-223, 5A-224, 5A-225, 5A-226, 5A-227, 5A-228, 5A-229, 5A-230, 5A-231, 5A-232, 5A-233, 5A-234, 5A-235, 5A-236, 5A-237, 5A-238, 5A-239, 5A-240, 5A-241, 5A-242, 5A-243, 5A-244, 5A-245, 5A-246, 5A-247, 5A-248, 5A-249, 5A-250, 5A-251, 5A-252, 5A-253, 5A-254, 5A-255, 5A-256, 5A-257, 5A-258, 5A-259, 5A-260, 5A-261, 5A-262, 5A-263, 5A-264, 5A-265, 5A-266, 5A-267, 5A-268, 5A-269, 5A-270, 5A-271, 5A-272, 5A-273, 5A-274, 5A-275, 5A-276, 5A-277, 5A-278, 5A-279, 5A-280, 5A-281, 5A-282, 5A-283, 5A-284, 5A-285, 5A-286, 5A-287, 5A-288, 5A-289, 5A-290, 5A-291, 5A-292, 5A-293, 5A-294, 5A-295, 5A-296, 5A-297, 5A-298, 5A-299, 5A-300, 5A-301, 5A-302, 5A-303, 5A-304, 5A-305, 5A-306, 5A-307, 5A-308, 5A-309, 5A-310, 5A-311, 5A-312, 5A-313, 5A-314, 5A-315, 5A-316, 5A-317, 5A-318, 5A-319, 5A-320, 5A-321, 5A-322, 5A-323, 5A-324, 5A-325, 5A-326, 5A-327, 5A-328, 5A-329, 5A-330, 5A-331, 5A-332, 5A-333, 5A-334, 5A-335, 5A-336, 5A-337, 5A-338, 5A-339, 5A-340, 5A-341, 5A-342, 5A-343, 5A-344, 5A-345, 5A-346, 5A-347, 5A-348, 5A-349, 5A-350, 5A-351, 5A-352, 5A-353, 5A-354, 5A-355, 5A-356, 5A-357, 5A-358, 5A-359, 5A-360, 5A-361, 5A-362, 5A-363, 5A-364, 5A-365, 5A-366, 5A-367, 5A-368, 5A-369, 5A-370, 5A-371, 5A-372, 5A-373, 5A-374, 5A-375, 5A-376, 5A-377, 5A-378, 5A-379, 5A-380, 5A-381, 5A-382, 5A-383, 5A-384, 5A-385, 5A-386, 5A-387, 5A-388, 5A-389, 5A-390, 5A-391, 5A-392, 5A-393, 5A-394, 5A-395, 5A-396, 5A-397, 5A-398, 5A-399, 5A-400, 5A-401, 5A-402, 5A-403, 5A-404, 5A-405, 5A-406, 5A-407, 5A-408, 5A-409, 5A-410, 5A-411, 5A-412, 5A-413, 5A-414, 5A-415, 5A-416, 5A-417, 5A-418, 5A-419, 5A-420, 5A-421, 5A-422, 5A-423, 5A-424, 5A-425, 5A-426, 5A-427, 5A-428, 5A-429, 5A-430, 5A-431, 5A-432, 5A-433, 5A-434, 5A-435, 5A-436, 5A-437, 5A-438, 5A-439, 5A-440, 5A-441, 5A-442, 5A-443, 5A-444, 5A-445, 5A-446, 5A-447, 5A-448, 5A-449, 5A-450, 5A-451, 5A-452, 5A-453, 5A-454, 5A-455, 5A-456, 5A-457, 5A-458, 5A-459, 5A-460, 5A-461, 5A-462, 5A-463, 5A-464, 5A-465, 5A-466, 5A-467, 5A-468, 5A-469, 5A-470, 5A-471, 5A-472, 5A-473, 5A-474, 5A-475, 5A-476, 5A-477, 5A-478, 5A-479, 5A-480, 5A-481, 5A-482, 5A-483, 5A-484, 5A-485, 5A-486, 5A-487, 5A-488, 5A-489, 5A-490, 5A-491, 5A-492, 5A-493, 5A-494, 5A-495, 5A-496, 5A-497, 5A-498, 5A-499, 5A-500, 5A-501, 5A-502, 5A-503, 5A-504, 5A-505, 5A-506, 5A-507, 5A-508, 5A-509, 5A-510, 5A-511, 5A-512, 5A-513, 5A-514, 5A-515, 5A-516, 5A-517, 5A-518, 5A-519, 5A-520, 5A-521, 5A-522, 5A-523, 5A-524, 5A-525, 5A-526, 5A-527, 5A-528, 5A-529, 5A-530, 5A-531, 5A-532, 5A-533, 5A-534, 5A-535, 5A-536, 5A-537, 5A-538, 5A-539, 5A-540, 5A-541, 5A-542, 5A-543, 5A-544, 5A-545, 5A-546, 5A-547, 5A-548, 5A-549, 5A-550, 5A-551, 5A-552, 5A-553, 5A-554, 5A-555, 5A-556, 5A-557, 5A-558, 5A-559, 5A-560, 5A-561, 5A-562, 5A-563, 5A-564, 5A-565, 5A-566, 5A-567, 5A-568, 5A-569, 5A-570, 5A-571, 5A-572, 5A-573, 5A-574, 5A-575, 5A-576, 5A-577, 5A-578, 5A-579, 5A-580, 5A-581, 5A-582, 5A-583, 5A-584, 5A-585, 5A-586, 5A-587, 5A-588, 5A-589, 5A-590, 5A-591, 5A-592, 5A-593, 5A-594, 5A-595, 5A-596, 5A-597, 5A-598, 5A-599, 5A-600, 5A-601, 5A-602, 5A-603, 5A-604, 5A-605, 5A-606, 5A-607, 5A-608, 5A-609, 5A-610, 5A-611, 5A-612, 5A-613, 5A-614, 5A-615, 5A-616, 5A-617, 5A-618, 5A-619, 5A-620, 5A-621, 5A-622, 5A-623, 5A-624, 5A-625, 5A-626, 5A-627, 5A-628, 5A-629, 5A-630, 5A-631, 5A-632, 5A-633, 5A-634, 5A-635, 5A-636, 5A-637, 5A-638, 5A-639, 5A-640, 5A-641, 5A-642, 5A-643, 5A-644, 5A-645, 5A-646, 5A-647, 5A-648, 5A-649, 5A-650, 5A-651, 5A-652, 5A-653, 5A-654, 5A-655, 5A-656, 5A-657, 5A-658, 5A-659, 5A-660, 5A-661, 5A-662, 5A-663, 5A-664, 5A-665, 5A-666, 5A-667, 5A-668, 5A-669, 5A-670, 5A-671, 5A-672, 5A-673, 5A-674, 5A-675, 5A-676, 5A-677, 5A-678, 5A-679, 5A-680, 5A-681, 5A-682, 5A-683, 5A-684, 5A-685, 5A-686, 5A-687, 5A-688, 5A-689, 5A-690, 5A-691, 5A-692, 5A-693, 5A-694, 5A-695, 5A-696, 5A-697, 5A-698, 5A-699, 5A-700, 5A-701, 5A-702, 5A-703, 5A-704, 5A-705, 5A-706, 5A-707, 5A-708, 5A-709, 5A-710, 5A-711, 5A-712, 5A-713, 5A-714, 5A-715, 5A-716, 5A-717, 5A-718, 5A-719, 5A-720, 5A-721, 5A-722, 5A-723, 5A-724, 5A-725, 5A-726, 5A-727, 5A-728, 5A-729, 5A-730, 5A-731, 5A-732, 5A-733, 5A-734, 5A-735, 5A-736, 5A-737, 5A-738, 5A-739, 5A-740, 5A-741, 5A-742, 5A-743, 5A-744, 5A-745, 5A-746, 5A-747, 5A-748, 5A-749, 5A-750, 5A-751, 5A-752, 5A-753, 5A-754, 5A-755, 5A-756, 5A-757, 5A-758, 5A-759, 5A-760, 5A-761, 5A-762, 5A-763, 5A-764, 5A-765, 5A-766, 5A-767, 5A-768, 5A-769, 5A-770, 5A-771, 5A-772, 5A-773, 5A-774, 5A-775, 5A-776, 5A-777, 5A-778, 5A-779, 5A-780, 5A-781, 5A-782, 5A-783, 5A-784, 5A-785, 5A-786, 5A-787, 5A-788, 5A-789, 5A-790, 5A-791, 5A-792, 5A-793, 5A-794, 5A-795, 5A-796, 5A-797, 5A-798, 5A-799, 5A-800, 5A-801, 5A-802, 5A-803, 5A-804, 5A-805, 5A-806, 5A-807, 5A-808, 5A-809, 5A-810, 5A-811, 5A-812, 5A-813, 5A-814, 5A-815, 5A-816, 5A-817, 5A-818, 5A-819, 5A-820, 5A-821, 5A-822, 5A-823, 5A-824, 5A-825, 5A-826, 5A-827, 5A-828, 5A-829, 5A-830, 5A-831, 5A-832, 5A-833, 5A-834, 5A-835, 5A-836, 5A-837, 5A-838, 5A-839, 5A-840, 5A-841, 5A-842, 5A-843, 5A-844, 5A-845, 5A-846, 5A-847, 5A-848, 5A-849, 5A-850, 5A-851, 5A-852, 5A-853, 5A-854, 5A-855, 5A-856, 5A-857, 5A-858, 5A-859, 5A-860, 5A-861, 5A-862, 5A-863, 5A-864, 5A-865, 5A-866, 5A-867, 5A-868, 5A-869, 5A-870, 5A-871, 5A-872, 5A-873, 5A-874, 5A-875, 5A-876, 5A-877, 5A-878, 5A-879, 5A-880, 5A-881, 5A-882, 5A-883, 5A-884, 5A-885, 5A-886, 5A-887, 5A-888, 5A-889, 5A-890, 5A-891, 5A-892, 5A-893, 5A-894, 5A-895, 5A-896, 5A-897, 5A-898, 5A-899, 5A-900, 5A-901, 5A-902, 5A-903, 5A-904, 5A-905, 5A-906, 5A-907, 5A-908, 5A-909, 5A-910, 5A-911, 5A-912, 5A-913, 5A-914, 5A-915, 5A-916, 5A-917, 5A-918, 5A-919, 5A-920, 5A-921, 5A-922, 5A-923, 5A-924, 5A-925, 5A-926, 5A-927, 5A-928, 5A-929, 5A-930, 5A-931, 5A-932, 5A-933, 5A-934, 5A-935, 5A-936, 5A-937, 5A-938, 5A-939, 5A-940, 5A-941, 5A-942, 5A-943, 5A-944, 5A-945, 5A-946, 5A-947, 5A-948, 5A-949, 5A-950, 5A-951, 5A-952, 5A-953, 5A-954, 5A-955, 5A-956, 5A-957, 5A-958, 5A-959, 5A-960, 5A-961, 5A-962, 5A-963, 5A-964, 5A-965, 5A-966, 5A-967, 5A-968, 5A-969, 5A-970, 5A-971, 5A-972, 5A-973, 5A-974, 5A-975, 5A-976, 5A-977, 5A-978, 5A-979, 5A-980, 5A-981, 5A-982, 5A-983, 5A-984, 5A-985, 5A-986, 5A-987, 5A-988, 5A-989, 5A-990, 5A-991, 5A-992, 5A-993, 5A-994, 5A-995, 5A-996, 5A-997, 5A-998, 5A-999, 5A-1000	1							
	-3	PBY-4	28F4055								
	-3	PBY-3	28F2182								
	-3	PBY-2	28F2182								
		PBY-1	28F097							28F096-7	1
		XPBY-1	28E100							28F096-8	1

O.H.	MODEL	NEXT ASSY.	REQ.	STD PARTS	LH REQ.	RH REQ.	PART NO.	LH REQ.	RH REQ.

REPLACES	APPR. [redacted] DATE
REPLACED BY	CALC. WT. [redacted] ACT. WT.
LIMIT ON DIMENSIONS UNLESS OTHERWISE SPECIFIED ± .005" ± 5°	SCALE 12" = 1'0"

REQUIREMENTS PER AIRPLANE			MAT.	PARTS LIST PER ASSY.			
A/C				Planning [illegible]	W-P		
NAVY NOTED	NOTED	NOTED	2-61-T4	4-29-43 4-7-43			
MATERIAL	SPEC.	HEAT TREAT	FINISH	DRAFT	CHECK	TRAN.	ENG.

CONSOLIDATED AIRCRAFT CORP. BUFFALO, N.Y.

STAMP PT. No. WHERE SHOWN

NAME FITTING - FUNNEL MAST TRIPLE STR. 3.33 - [illegible]

OPP. HAND

DWG. D28F096

SP.	GREEN PRIME
[illegible]	[illegible]
C	CADMIUM PLATE

SUPPLIES & EQUIPMENT CLASSIFICATION			
LET	ALTERATION	DATE	BY
J	TRACED UP TO DATE	3-23-37	V.E.D.
K	ADDED PART-4 REQUIRED	2-1-38	
E.O. 23329C L	-1 REQUIRED, AN 392-D5 & AN 960-D516		
	REPLACED BY AN 392-46, WASHER ADDED		
	REAMING REMOVED 6-8-39-10 ONLY		
	ASSIGNED	11-5-40	
E.O. 23329D M	-10 R&L WAS -10, 3/4 WAS 1	1-22-41	
E.O. 35207 N	1 7/8 RADIUS WAS 1 3/8	2-28-41	
E.O. 35808 O	1 11/32 RADIUS WAS 1 5/16	4-2-41	SALB
PBY-5 & PBY-5A P	CORRECTED B/M & DWG. FOR -10 ASS'Y.		
(PBY-5, -5A, -5A-10, 28-5MD, MN & MC)	& CORR. INCORP. OF E.O. 23329D	5-6-41	
E.O. A13843 Q	ADD NOTE: ALL BEND RADII 1/16	6-6-41	EVANS
R	1/4 DIM. CHANGED TO 7/16 & HOLE	1-14-42	JOHNSON
	RELOCATED ACCORDINGLY.		

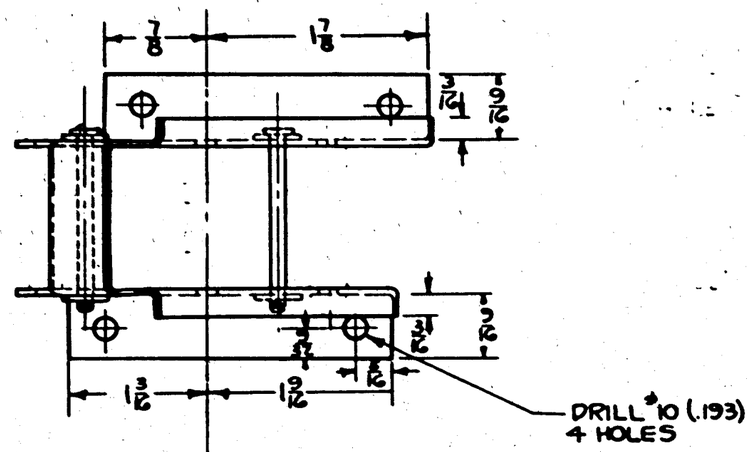

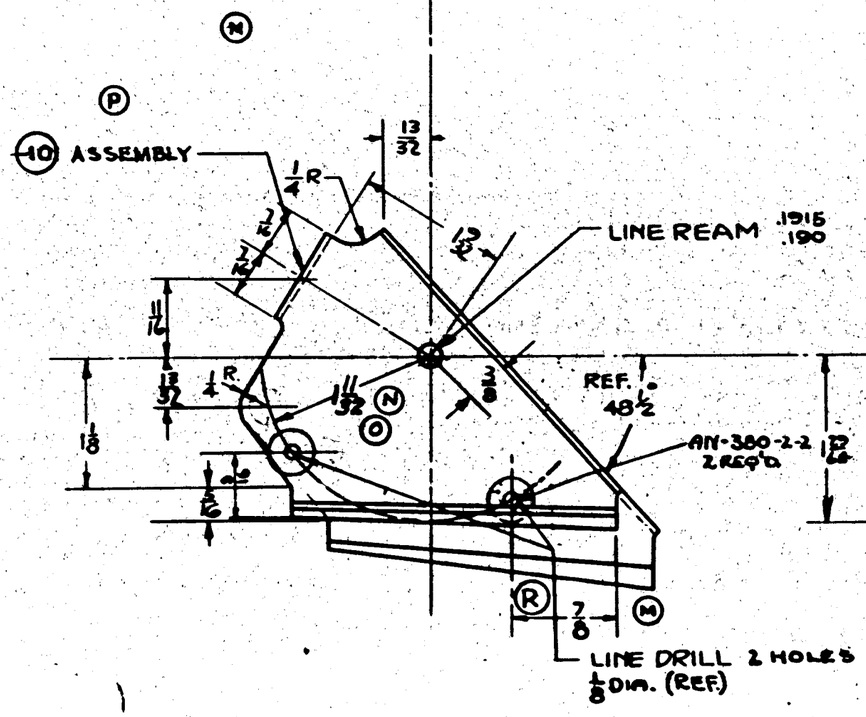

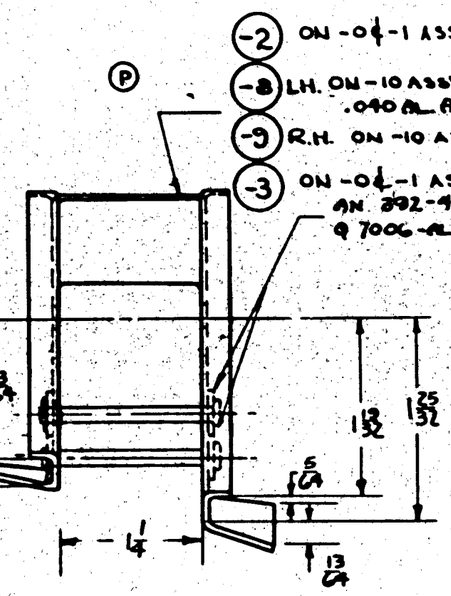

GP-GREEN PRIME FINISH COL.

NOTE:
(Q) ALL BEND RADII 1/16

-10R	28-5AMR	28A1015	1														
-10L	28-5AMN	28A1015	1														
-10R	28-5AMC	28A1015	1														
-10L	28-5AMC	28A1015	1														
-10R	28-5MN	28A1015	1														
-10L	28-5MN	28A1015	1														
-10R	28-5MC	28A1015	1														
-10L	28-5MC	28A1015	1														
-10R	PBY-5A	28A1015	1														
-10L	PBY-5A	28A1015	1														
-10R	PBY-5	28A1015	1														
-10L	PBY-5	28A1015	1														
-1	PBY-4	24A1016															
-0	PBY-4	24A1016															
-1	PBY-3	28A1015															
-0	PBY-3	28A1015													AN380-2-2	2	2	2	2
-1	PBY-2	28A1015													AN392-4S	2	2	2	2
-0	PBY-2	28A1015													Q7006-0L-11-.030	4	4	4	4
-1	PBY-1	28A1015													-9				1
-0	PBY-1	28A1015													-8			1	
-1	XP3Y-1	28A011	1												-3		1		
-0	XP3Y-1	28A011	1												28F137-2	1			
				O.H.	MODEL	NEXT ASSY.	REQ.	STD PARTS	LH REQ.	RH REQ.	PART NO.					-0	-1	-10	

REPLACES	APPROVED 11-4-36 DATE	REQUIREMENTS PER AIRPLANE		MAT.	PARTS LIST PER ASSY.
REPLACED BY	.110 CALC.WT. / ACT.WT.				
LIMIT ON DIMENSIONS UNLESS OTHERWISE SPECIFIED ± .010	SCALE 12" = 1'-0"				
	AC			GP	4-9-38 MILLER
	NAVY NOTED	NOTED	NOTED	Z-3	DRAWN 3-28-38
	MATERIAL	SPEC.	HEAT TREAT	FINISH	DRAFT / CHECK / ENGR. / SUPS.

ALL AL. ALLOY SHEET SPEC. 47A10 (CONDITION A) ALLOY 24A EXCEPT AS NOTED
ALL AL. ALLOY EXTRUSIONS SPEC. (CONDITION A) ALLOY 24A EXCEPT AS NOTED
HEAT TREAT ALL CONDITION A MATERIAL PER SPEC. SAE3
RIVETS AL. ALLOY EXCEPT AS NOTED

CONSOLIDATED AIRCRAFT CORP. BUFFALO, N.Y.

STAMP PT. No. WHERE SHOWN

NAME: BRACKET-PULLEY-FURN-BOMB RELEASE F'W'D.

OPP. HAND

SIZE D

28F137

SUPPLIES & EQUIPMENT CLASSIFICATION			
LET	ALTERATION	DATE	BY
C	TRACED UP TO DATE	3-24-37	[illegible]
D	ADDED DRY-4 PERMITS	7-1-38	[illegible]
E	REMOVED 1/16 FLANGE	7-10-41	[illegible]
F	AN442-D3 WAS Q4305-D3/NO INT. CHGS. IN SPECIFICATIONS		

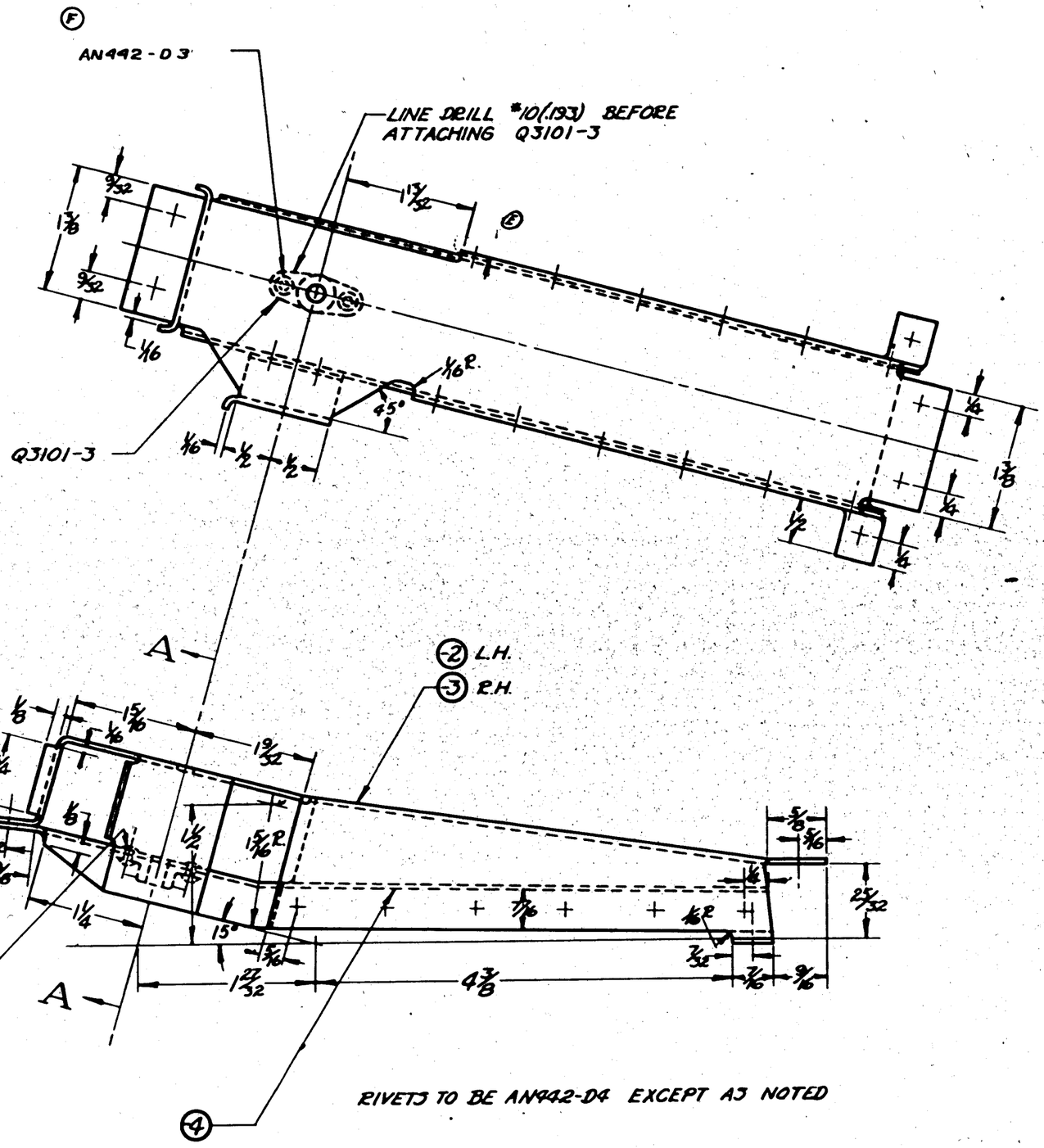

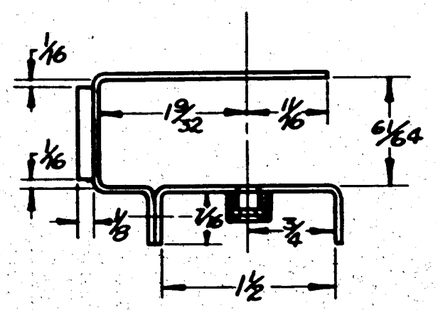

P-GREEN PRIME
FINISH CODE

-1	28-5AMN	28A1015	1									
	28-5AMN	28A1015	1									
-1	28-5AMC	28A1015	1									
	28-5AMC	28A1015	1									
-1	28-5MN	28A1015	1									
	28-5MN	28A1015	1									
-1	28-5MC	28A1015	1									
	28-5MC	28A1015	1									
-1	PBY-5A5A	28A1015										
	PBY-5A5A	28A1015										
-1	PBY-4	28A1015										
	PBY-4	28A1015										
-1	PBY-3	28A1015										
	PBY-3	28A1015										
-1	PBY-2	28A1015										
	PBY-2	28A1015								Q3101-3	1	1
-1	PBY-1	28A1015										
	PBY-1	28A1015		AN442-D3						-4	1	1
-1	XPBY-1	28A011								-3		1
	XPBY-1	28A011		AN442-D4	14	14	28F139-2			1		
O.H.	MODEL	NEXT ASSY.	REQ.	ST'D PARTS	LH REQ.	RH REQ.	PART NO.			LH REQ.		RH REQ.

REQUIREMENTS PER AIRPLANE | MAT. | PARTS LIST PER ASSY.

REPLACES	APPROVED 6-1-36 DATE						
REPLACED BY	280 CALC. WT. / ACT. WT.						
LIMIT ON DIMENSIONS UNLESS OTHERWISE SPECIFIED ±	SCALE 12"=1'-0"						
[redacted]	AC						
	NAVY 24S AL. ALLOY SHT. COND. A ALLOY A	47A10	3R53	Z-P-2A[illegible]	8-23-39	[illegible]	
	MATERIAL	SPEC.	HEAT TREAT	FINISH GP	DRAFT	CHECK	EXAM. ENG.

CONSOLIDATED AIRCRAFT CORP. BUFFALO, N. Y.
STAMP PT. No. WHERE SHOWN

NAME
BRACKET-FURN-BOMB REL. PULLEY BULKHEAD #4(LOWER)

OPP. HAND 28F139-1

SIZE D 91128

28F139

SUPPLIES & EQUIPMENT CLASSIFICATION			
LET	ALTERATION	DATE	BY
K	TRACED UP TO DATE	3-23-38	R.A.C.
L	ADDED TO NOTE C'SINK 90° X 5/32	1-28-41	[redacted]
M	CHANGED 250# TO 288#	4-5-41	FOULKER
N	CREATED -20 ASSY. ADDED NOTE		
	C.A.C. FURN. FOR -20 ASSY.	4-7-41	[redacted]
P	CHANGED 288# TO 442#	6-5-41	[redacted]

E.O. 22607A

E.O. 24085

AN392-13 CLEVIS PIN
AN380 B2-2 COTTER PIN
AN960-C4 WASHER

WRAP & SOLDER

28F1431 - ARMING LOCK

③ 3/32 DIA x 7 x 7 FLEX STEEL CABLE SPEC 22C2

② 3/32 DIA x 7 x 7 FLEX STEEL CABLE SPEC 22C2

STAMP 1/16 HIGH TAG MARKING
29-0B ON L.H.
29-1B ON R.H.

STAMP 1/16 HIGH TAG MARKING 29A

Q6342-3R SLEEVE

15 1/8

11 7/8

STAMP 1/16 HIGH TAG MARKING
29-1B ON L.H.
29-0B ON R.H.

MK XXIX BOMB RELEASE HANDLE
BO DWG #147590
(GOV'T FURN. FOR -0 ASSY.)
(C.A.C. FURN. FOR -20 ASSY.)

(N)

DRILL 7/64 ø C'SINK 90° X 5/32 IN CLEVIS END

(L)

FAN OUT END OF CABLE & SOLDER

MAXIMUM EXTENDED LENGTH (LEVER IN EXTREME FORWARD POSITION)

FINISH CABLE WITH PARALKETONE

NOTE:- (P) (M)
1. PRESTRETCH CABLE ASSY TO 442 #
2. STAMP AS PER SPEC 7466 AS APPLICABLE.

2OR	28-SAHN	28A1015	1
2OL	28-SAHN	28A1015	1
-R	28-SAHC	28A1015	1
-L	28-SAHC	28A1015	1
-R	28-SMN	28A1015	1
-L	28-SMN	28A1015	1
-R	28-SMC	28A1015	1
-L	28-SMC	28A1015	1
-R	PBY-SA	28A1015	1
-L	PBY-SA	28A1015	1
-R	PBY-5	28A1015	1
-L	PBY-5	28A1015	1
QTY	PART NO.	NEXT ASSY	REQ

ATTACHMENTS TO THE AIRPLANE

Q6342-3R	3	9	3	3			
-R PBY-4	28A1015	28F1431	1	1	1	1	
-L PBY-4	28A1015	28F1431-3	1	1	1	1	
-R PBY-3	28A1015	28F165-2	2	2	2	2	
-L PBY-3	28A1015						
-R PBY-2	28A1015	AN392-13	1	1	1	1	
-L PBY-2	28A1015	AN380B2-2	1	1	1	1	
-R PBY-1	28A1015	AN960-C4	1	1	1	1	
-L PBY-1	28A1015	147590	1	1	1	1	
-R XP3Y-1	28A-011						
-L XP3Y-1	28A-011						
PART NO.							
PARTS LIST NEXT ASSY		LH RH	LH RH	LH RH	LH RH		REQ
MAT.		-0		-20			

REPLACES		APPROVED [redacted]	11-4-35 DATE		
REPLACED BY		180 CALC. WT.	ACT. WT.	O.H.	MODEL
LIMIT ON DIMENSIONS UNLESS OTHERWISE SPECIFIED	± 1/32	SCALE 12" = 1'0"		NEXT ASSY.	REQ'D
[redacted]		AC		REQUIREMENTS PER AIRPLANE	
		NAVY NOTED		NOTED	NONE
		MATERIAL		SPEC.	HEAT TREAT
CONSOLIDATED AIRCRAFT CORP. BUFFALO, N.Y.		STAMP PT. No. WHERE SHOWN		[redacted]	FINISH

DWG 11 [redacted]
5-29-39 9-30-41
DRAFT | CHECK | EXAM. | ENG.

NAME MK XXIX BOMB RELEASE HANDLE

OPP. HAND 28F165-R

SIZE D SHEET 28F165

SUPPLIES & EQUIPMENT CLASSIFICATION			
LET	ALTERATION	DATE	BY
L	TRACED UP TO DATE	8-23-37	R.A.
M,N	CHANGE ON FACE OF DWG. $ B/M. AN526DD832-6 $ AC365D832 WAS AN962-D6 RIVETS.	5-22-41	[illegible]

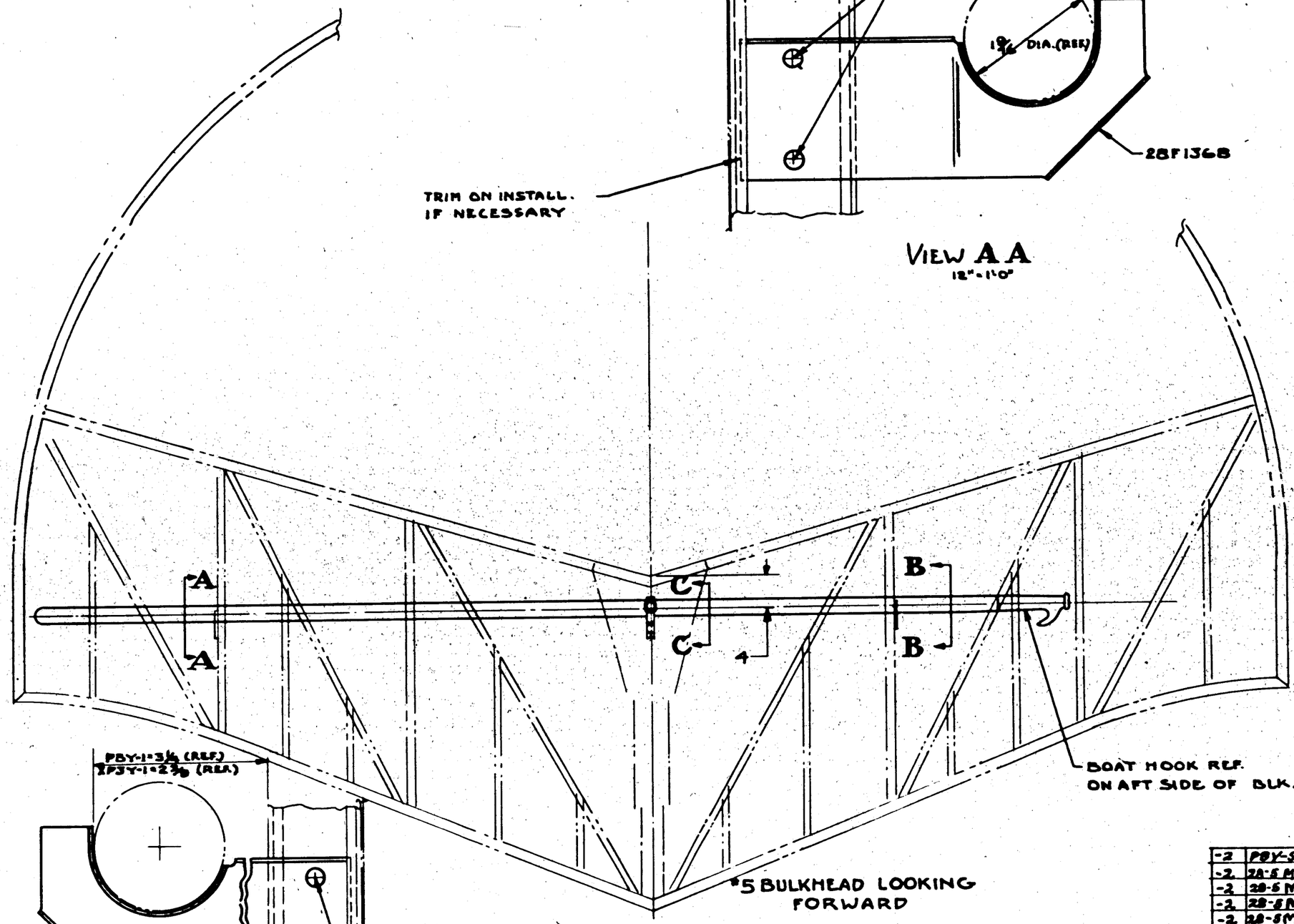

VIEW AA
12"=1'0"

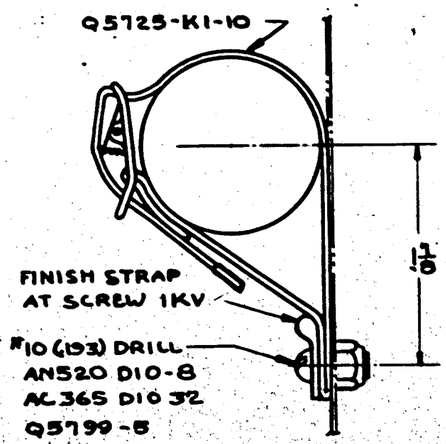

SECTION CC
SCALE 12"=1'-0"

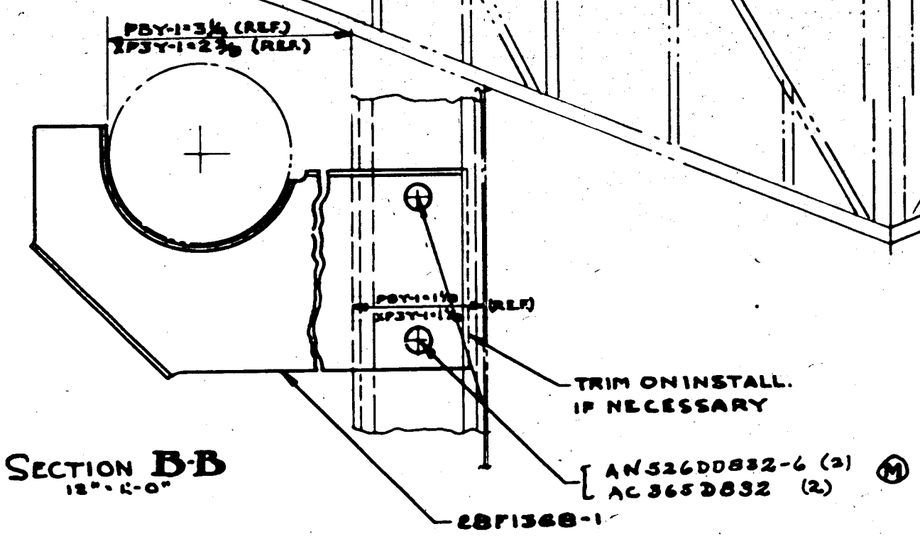

SECTION BB
12"=1'-0"

-2	PBY-5B	28F7002	1							
-2	28-5 MH	28F5502	1							
-2	28-5 MC	28F5502	1							
-2	28-5 MA	28F5502	1				Q5799-5		1	
-2	28-5 ME	28F5502	1	AN515-8R8	4	4				
-2	PBY-5	28F1002	1	AC365D832	4	4	28F1368-1		1	
-2	PBY-4	28F1002	1				28F1368		1	
-2	PBY-3	28F1002	1	AC365D1032		1	28F275-1	1		
-2	PBY-2	28F1002	1	AN520D10-6		1	28F275	1		
-2	PBY-1	28F1002	1							
	XPBY-1	28U001	1	AN960-D6	2		Q5725-K1-10	1	1	

For SHIPS 1 TO 48 INC.

REPLACES														
REPLACED BY														
LIMIT ON DIMENSIONS UNLESS OTHERWISE SPECIFIED ±														
[redacted]														

SUPPLIES & EQUIPMENT CLASSIFICATION			
LET	ALTERATION	DATE	BY
D	TRACED	5-20-37	V.I.
E	ADDED "G.F.E. NOT G.F.E. INSTALLED"	1-19-38	ROM
F	CREATE -58 ASS'Y; 28F298-58	11-14-40	
	WAS 28F298 IN -58 ASS'Y ONLY		
G	RELEASED DWG. FOR 28-6 MC & 28-6 AMC	7-7-41	
H	CREATED -2 ASS'Y. (NO WT. CHG)	12-24-42	
J	ADDED NOTES: 'STOW *NAF1174 FIRING KEY IN POCKET' & 'G.F.E. & CONTRACTOR INSTALLED FOR -2 ASS'Y & FOR PBY-5A CONT. NXS13595'. IN A/M TO -2 & -0 ASS'Y ADDED * NAF1174 (1) REQ AND WT. CHG.	5-20-37	

C.O. 6753
E.O. 27448

EQUIP
EQ. ADDED
ED 83629
MCR 202-1

VIEW A-A (H)
STARBOARD SIDE
-2 ASSY. ONLY

2½ APPROX

FIRING KEY STOWAGE

STRINGER #168

STRINGER #170

℄ OF BELTFRAME .033

28B1090 NOSE PLATE (REF.)

CHINE LINE

-0 & -58 ASSYS. ONLY
PORT SIDE
STRINGER #169
(REF)

(H) -2 ASSY. ONLY
STARB'D. SIDE
STRINGER #169

-0 & -58 ASSY. ONLY
PORT SIDE
STRINGER #171
(REF.)

(H) -2 ASSY. ONLY
STARB'D. SIDE
STRINGER #170

(J) NOTE: STOW *NAF1174 FIRING KEY IN POCKET

(H) 28F298 {FOR -0 & -2 ASSY'S.
(F) 28F298-58 IN -58 ASS'Y ONLY

℄ OF BELTFRAME .033

FORWARD

2½ APPROX

FIRING KEY STOWAGE

STRINGER #171

STRINGER #169

½ 2¾ ½

VIEW A-A
PORT SIDE -0 & -58 ASSYS. ONLY

11/32

* 28 (.1405) DRILL
6 HOLES
AN515 D6-6
AN960 D6
AC365D632

NOTE:
CORNER OF BAG IS TO BE FOLDED AS SHOWN & SCREW INSTALLED SO THAT FRONT OF BAG IS ATTACHED TO STRINGER.

(E) AN515-D6-12
AC365-D632
AN960-D6
} 1 EA. REQ'D
SCREW SHOULD NOT GO THRU FLAP

C-91876 * 91601
C-70494-91876 * 1-90

(J) NOTE: G.F.E. & CONTRACTOR INSTALLED FOR -2 ASSY & FOR PBY-5A CONT NXS 13595

* GOVERNMENT FURNISHED & INSTALLED EQUIP

-58	28-5AMN	28F6005	1						
-2	PBY-5	28F1002	1						
-0	PBY-5	28F1002	1	AN515-D6-12	1				
	PBY-5B	28F7002	1	AN515-D6-6	6				
	PBY-5A	28F6002	1	AN960-D6	7				
	28-5AMC	28F6005	1	AC365D632	7				
	28-5MC	28F5502	1	ASSY-58			28F298-58	1	
-58	28-5MC	28F6502	1						
	PBY-5	28F1002		* NAF 1174	1	1			
	PBY-5	28F1002		AN515D6-12	1	1			
	PBY-2	28F1002		AN515D6-6	6	6			
	PBY-1	28F1002		AN960-D6	7	7			
	XPBY-1	28F1002		AC365D632	7	7	28F298-	1	1

O.H.	MODEL	NEXT ASSY.	REQ.	ST'D PARTS	-0	-2	PART NO.	-0	-2

REPLACES 28F297 of 10/10/34
REPLACED BY
LIMIT ON DIMENSIONS UNLESS OTHERWISE SPECIFIED ±

APPROVED 5-20-37 DATE
CALC. WT. .24 ACT. WT.
SCALE 6" = 1'-0"
AC
NAVY NONE
MATERIAL

REQUIREMENTS PER AIRPLANE | MAT. | PARTS LIST PER ASSY.

SPEC.	HEAT TREAT	FINISH
NONE	NONE	NONE

DRAWN Miller 9-11-36 | TRACED 5-20-37 | CHK CN | ENG. | DRAFT | CHECK | ENGR. | ENG.

CONSOLIDATED AIRCRAFT CORP. BUFFALO, N.Y.
STAMP PT. No. WHERE SHOWN

NAME
INSTALL-FURN. FIRING KEY STOWAGE POCKET

OPP. HAND

SIZE D DWG. 28F297

SUPPLIES & EQUIPMENT CLASSIFICATION			
LET	ALTERATION	DATE	BY
A	TRACED UP TO DATE	9-3-42	
B	PBY-1 ADDED		
C	"DOUBLE" REMOVED, COTTON THRD	9-21-42	
	LINEN THREAD		
D	REVISED "STRUNG" FROM STRONG - ANGLE 1/2 DIM.	11-10-42	
E	ADDED -5B ASS'Y & NOTE. EOA27447		
F	CREATED -3 ASSY. NO WT CHG. EOA36834	6-3-43	
G	CHGD MATL FROM 12 WATERPROOF TO 8 OZ. WATERPROOF CANVAS		
	CANVAS WT. CHG. NEG.	6-3-43	
H	ADDED TO REINFORCE EXPOSED EDGES PER EOA 2000 (-3 ASSY -3 GASKET) NO WT. CHG.	11-8-43	
J	AT BIN, ADDED QAGI-15L & QAGI-16, QAGI-18S & QAGI-20, AT MAF FROM MAF 210584, QAGI-15L, QAGI-16, QAGI-18S & QAGI-20, ADDED "SEE NOTE" ON FACE, REPLACED CALLOUT "MAF 210584 - FAST (MALE) MAF 26207 - FAST (FEMALE)" WITH NOTE: "FASTENER (MALE) Q1601-18S & Q1601-20, OR MAF 210584; FASTENER (FEMALE) Q1601-15L & Q1601-16, OR MAF 26207." NO WT. CHG.	10-23-43	

FIRING KEY

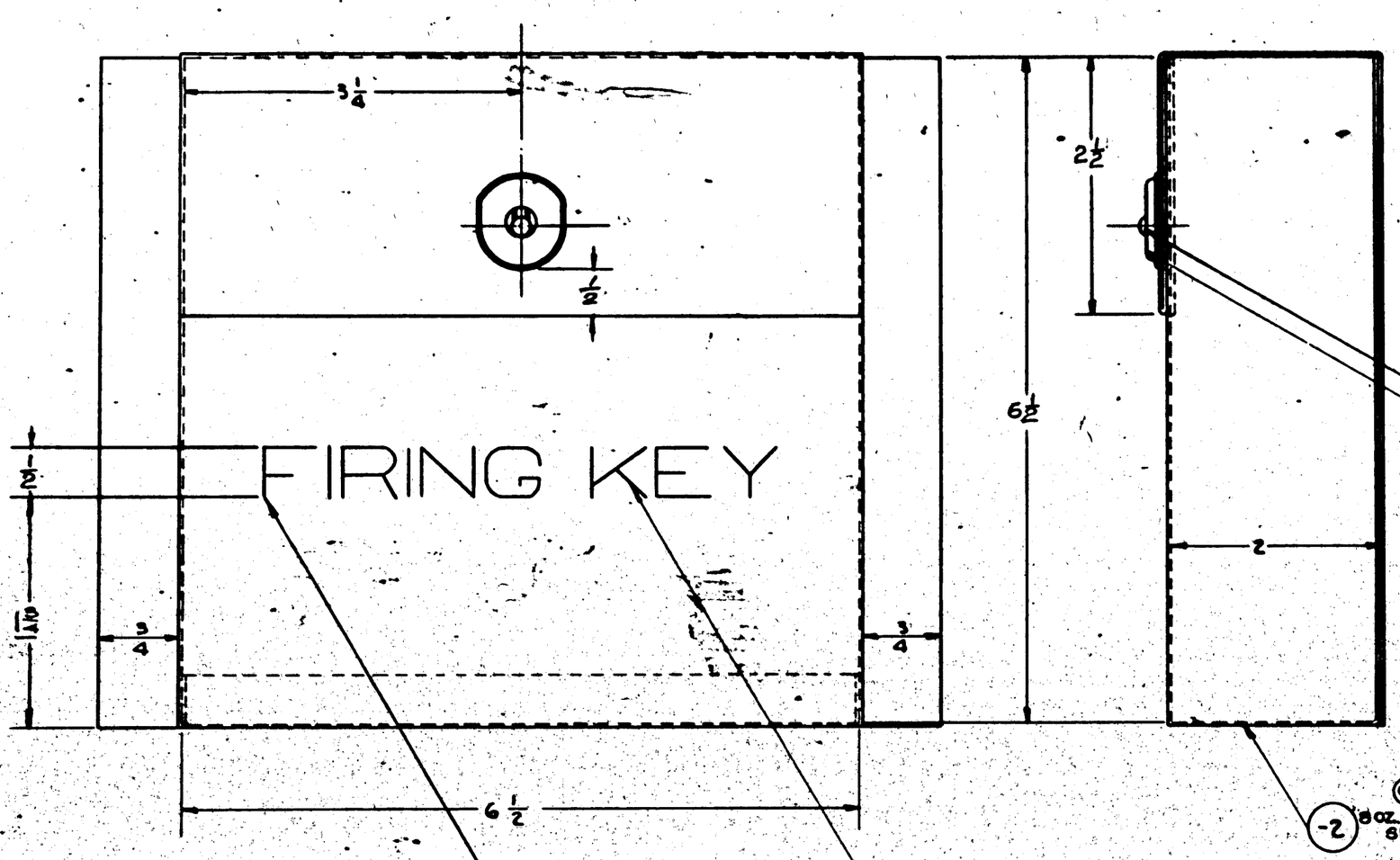

FASTENER (MALE) Q1601-18S & Q1601-20, OR MAF210584. (J)

FASTENER (FEMALE) Q1601-15L & Q1601-16, OR MAF26207.

(G) 8 OZ. WATERPROOF CANVAS SPEC. 24 D4

STENCILED WORDS TO BE:- "BOMMEN AFWERP" FOR -5B ASS'Y ONLY (E)

1/2 BLOCK LETTERS, STENCIL ON WITH BLACK ENAMEL

NOTE:- (C)
ALL SEAMS AND HEMS TO BE STITCHED WITH COTTON THREAD SPEC.-VT-276A

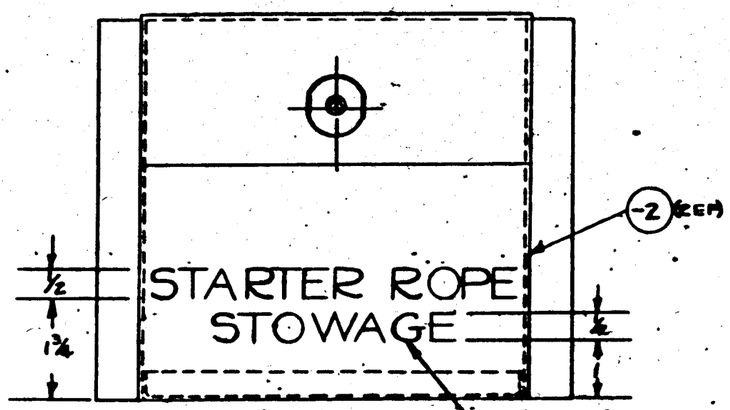

(F) (FOR -3 ASSY ONLY) SCALE 6"-1'-0"

O.N.	MODEL	NEXT ASSY.	REQ.	STD PARTS	MAT.	PARTS LIST PER ASSY.
-0	PBZY-3	29F6305	1			
-3	PBZY-3	29F4992	1			
-4			1			
-9	PBZY-3	29F6811	1			
-6J	29-GASKET	28F5963	15A			
-5B	29-GASKET	28F297	15A			
-5	PBZY-5B	28F297	1			
-5C			15A			
-5D						
	PBY-4	28F297		Q1601-16		
	PBY-3	28F297		Q1601-15L		
	PBY-2	28F297		Q1601-20		
	PBY-1	28F297		Q1601-18S		
	PZY-3	22F1763	1	MAF 26207		
	XPBY-1	28F297	1	MF 26207		

-2

REPLACES	APPROVED	DATE
REPLACED BY	CALC. WT. -25	ACT. WT.
LIMIT OF DIMENSIONS UNLESS OTHERWISE SPECIFIED ±	SCALE 12" = 1'0"	
	AC	
NAVY NOTED	NOTED	NONE
MATERIAL	SPEC.	HEAT TREAT
	NONE	
	FINISH	

CONSOLIDATED AIRCRAFT CORP. BUFFALO, N. Y.

STAMP PLATE WHERE SHOWN

NAME: POCKET - FURNISHINGS FIRING KEY - STOWAGE

DRAFT 11/12/42 | CHK. | ENGR. | RELD.

SUPP. HAND

D 28F2

LET	ALTERATION	DATE	BY
Q	TRACED. NO WT. CHG.	6-24	SAE

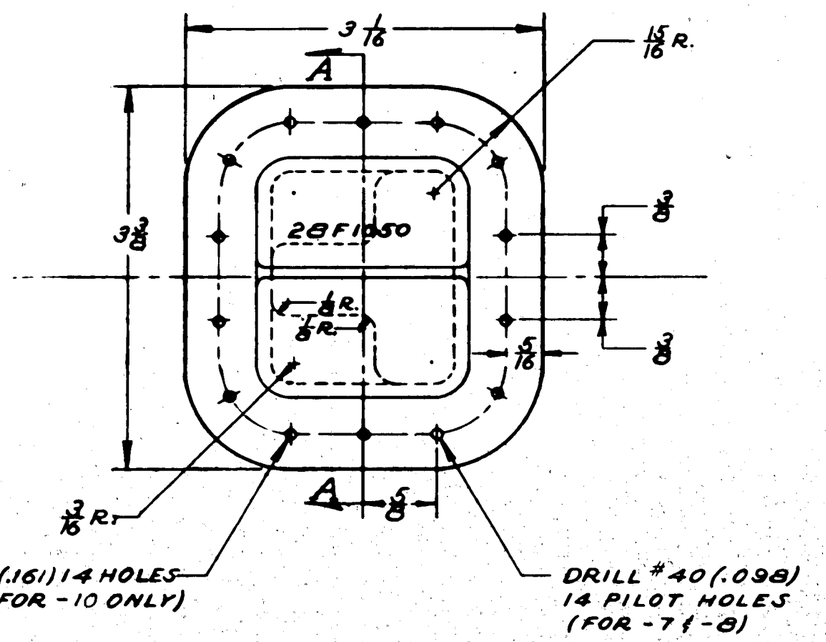

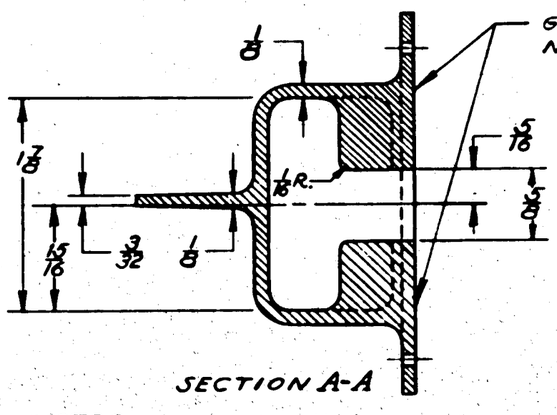

SECTION A-A

MAT'L. NOTE:
AL. AL. 356 T6, SPEC. AN-QQ-A-394,
H.T. 30,000 #/□.
ALT. MAT'L.
AL. ALLOY S-195 T6, SPEC. AN-A-5 CL II,
H.T. 32,000 #/□.

NOTES:
1.-9 SAME AS -6 EXCEPT THAT 2 5/16 FIN IS OMITTED FROM -9
2. ALL UNDIMENSIONED RADII 3/16
3. ALL UNMARKED WALL THICKNESS 1/8

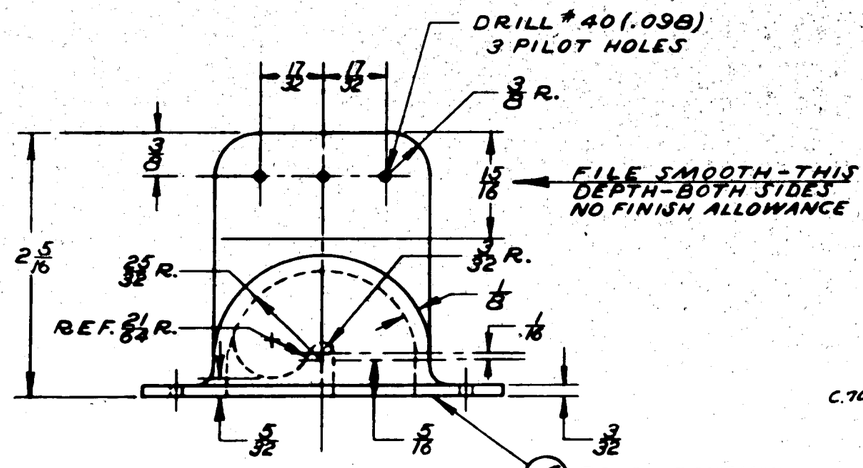

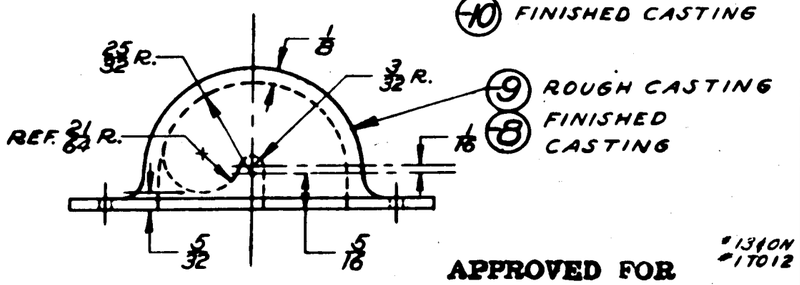

APPROVED FOR TOOLING BY
Gerstine 7-10-43

ASSY. DASH NO.	MODEL	NEXT ASSY.	REQ.
-10	PB2Y-3	29W3659	4
-10	PB2Y-3	29W3594	4
-6	PB2Y-3	29W3508	8
-7	PB2Y-2	29W1339	16
-8	PBY-5A	28W5050	8
-6	PBY-5	28W5050	8
-7	YP4Y-1	31W402	16
-7	PBY-5B	28A3356	32
-7	PBY-5	28W4005	28
-7	PBY-5A	28W004	4
-7	PBY-5	28W004	4
-7	PBY-5A	28W3005	30
-7	PBY-5	28W3005	30
-7	PBY-5A	28W3005	24
-7	PBY-5	28W3005	24
-7	PBY-4		
-7	PBY-3		
-7	PBY-2		
-7	PBY-1		
-7	XP3Y-1		

C. NO 8(W) 464
C. 91876 SHIPS #91 ON
C. 70496 SHIPS #17035
C. 70496 C. 77713 & C. B8476 ONLY
C. 70496 #36 TO 167 & C. 91876 #1-90
C. NO 8(W) 464
C. 91876 - #91 & ON

ASSY. DASH NO.	MODEL	NEXT ASSY.	REQ.
-8	28-5AMC	28W5335	4
-8	28-5MN		4
-8	28-5MC		4
-7	28-5AMC		16
-7	28-5MN		16
-7	28-5MC	28W5335	16
-7	28-5AMC	28W004	4
-7	28-5MN	28W004	4
-7	28-5MC	28W004	4
-7	28-5ME	28A3356	32
-7	28-5ME	28A3521	32
-7	28-5ME	28W004	4
-7	28-5MA	28W004	4
-7	28-5MA	28A3356	32

#1310N
#17012

REQUIREMENTS PER AIRPLANE

REPLACES 28F1050 2/20/36 .22 CALC WT.
REPLACED BY ACT. WT.
SCALE 12" = 1'-0"
STAMP PART NUMBER WHERE SHOWN

PART No	STOCK	MATERIAL	SPEC.	LH REQ. -0	RH REQ. -0	LH REQ. -2	RH REQ. -2	LH REQ. -3	RH REQ. -3	LH REQ. -4	RH REQ. -4	LH REQ. -5	RH REQ. -5
-10		NOTED	NOTED										
-9													
-8		NOTED	NOTED										
-7													
-6													

PARTS LIST PER ASSY.

AC			DRAWING	Dunne				
NAVY NOTED	Z-P-GP		2-20-36	7-3-43				
HEAT TREAT	FINISH		DRAFT	CHECK	STRUCT	MAT	APPROV	ENG.

NAME SOCKET BOMB LOADING PLATFORM
OPP. HAND
DWG SIZE D
28F1050

CONSOLIDATED VULTEE AIRCRAFT CORP. SAN DIEGO DIVISION . . SAN DIEGO, CALIF.

28F1050 R

SUPPLIES & EQUIPMENT CLASSIFICATION			
LET.	ALTERATION	DATE	BY
B	TRACED	5-[illegible]-39	[illegible]
C	ADDED -16 FOR -14 ASSY. & -17 FOR -15 ASS'Y. TO DWG. FACE. NO WT. CHG.	12-26-40	[illegible]
D	ON FACE REPLACED SPEC. "44623" WITH "AN-QQ-S-684". REPLACED "H.T. "N.A.E. SAE 27-6" WITH "90,000 TO 125,000 #/□". NO WT. CHG.	6-9-43	[illegible]

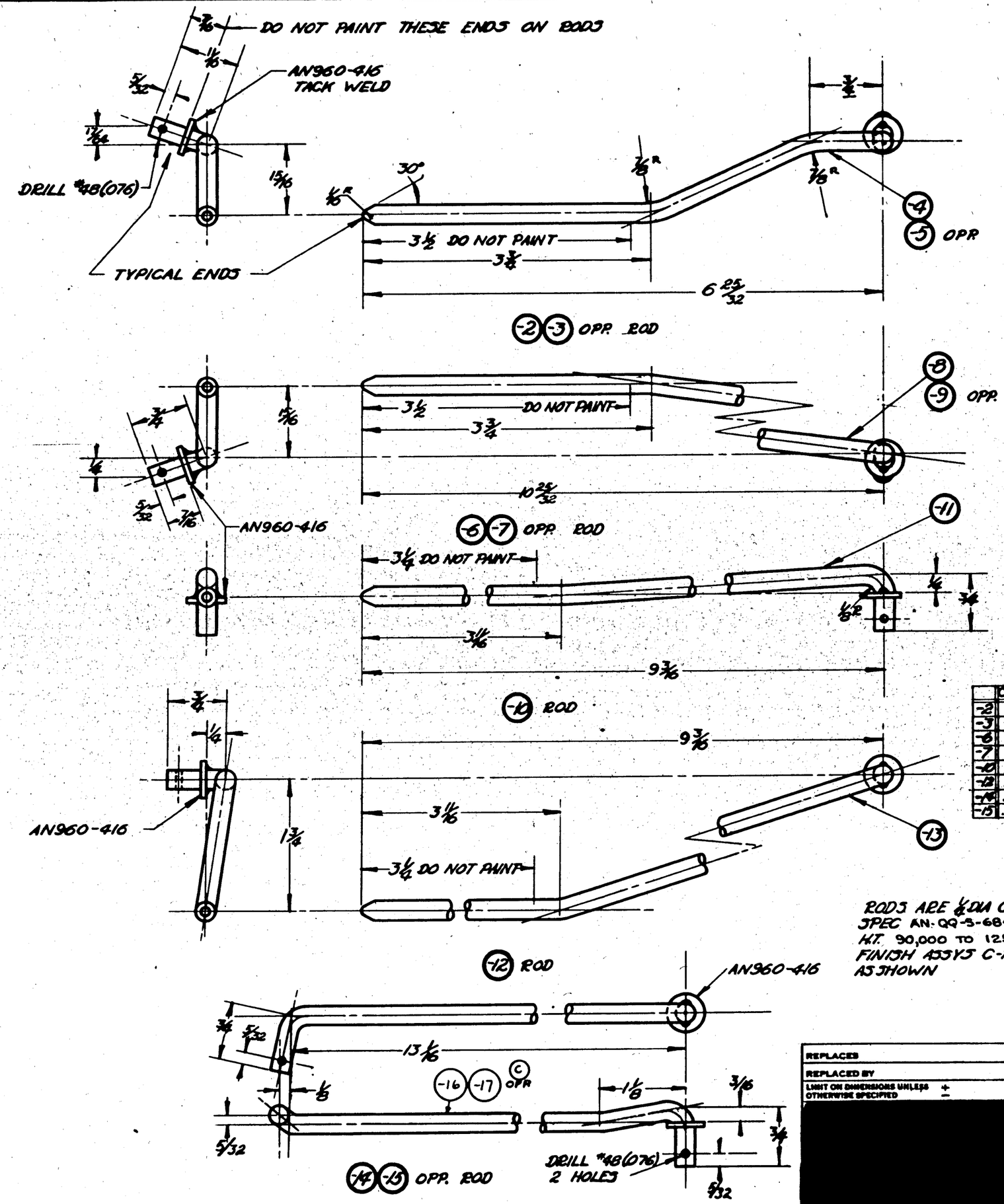

	CALC. WT.	ACT. WT.
-2	.11	
-3	.11	
-6	.17	
-7	.17	
-10	.14	
-12	.15	
-14	.20	
-15	.20	

RODS ARE ¼ DIA C.M. STEEL SPEC AN-QQ-S-684. HT. 90,000 TO 125,000 #/□". FINISH ASSYS C-P-2GP AS SHOWN

FOR PBY-5 & 8 SEE RELEASES

	O.M.	MODEL	NEXT ASSY.	REQ.	ST'D PARTS	PART NO. LH REQ.	PART NO. RH REQ.
	PBY-4	SEE 8/N SHEET	AN960-416	1	ASSY-15	-17	1
	PBY-3	SEE 8/N SHEET					
	PBY-2	SEE 8/N SHEET					
-15	PBY-1	28F1070-1			ASSY-14		
-14	PBY-1	28F1070	AN960-416	1		-16	1
-12	PBY-1	28F1070-1					
-12	PBY-1	28F1070			ASSY-12		
-10	PBY-1	28F1070-1	AN960-416	1		-13	1
-10	PBY-1	28F1070					
-7	PBY-1	28F1024-1			ASSY-10	-11	
-6	PBY-1	28F1024	AN960-416	1		-11	1
-3	PBY-1	28F1024-1					
-2	PBY-1	28F1024			ASSY-7		
-15	XPBY-1	28F1070-1	AN960-416	1		-9	1
-14	XPBY-1	28F1070					
-12	XPBY-1	28F1070-1			ASSY-8		
-12	XPBY-1	28F1070	AN960-416	1		-8	1
-10	XPBY-1	28F1070-1					
-10	XPBY-1	28F1070			ASSY-3		
-7	XPBY-1	28F1024-1	AN960-416	1		-5	1
-6	XPBY-1	28F1024					
-3	XPBY-1	28F1024-1			ASSY-2		
-2	XPBY-1	28F1024	AN960-416	1		-4	1

REPLACES	DRAWN [illegible] 2-27-36 DATE				
REPLACED BY	NOTED C.M.C. WT. ACT. WT.				
LIMIT ON DIMENSIONS UNLESS OTHERWISE SPECIFIED ±	SCALE 12"/1'0"	REQUIREMENTS PER AIRPLANE		MAT.	PARTS LIST PER ASSY.
[redacted]	AC				Young Cassel
	NAVY NOTED	NOTED	NOTED	NOTED	6-12-39 6-6-39 [illegible]
	MATERIAL	SPEC.	HEAT TREAT	FINISH	DRAFT CHECK EXAM. ENG.

CONSOLIDATED AIRCRAFT CORP. BUFFALO, N. Y.

STAMP PT. No. WHERE SHOWN

NAME: RODS-FURNS PILOT'S SEAT RELEASE

OPP. HAND

SIZE D DWG. 28F1005

Dudley Hickerson Co., Inc., Buffalo

SUPPLIES & EQUIPMENT CLASSIFICATION			
LET	ALTERATION	DATE	BY
K	TRACED	7-1-37	[illegible]
L	STRADDLE MILL WAS SPOT FACE – DIMS. ADDED	11-2-37	LAWLER
M	CHANGE DIM. To ⅝ WAS ½ – [illegible]	10-7-40	LABE
N	.385±.003 WAS .391±.002, REMOVED NOTE "⅝ CORE." REF.	12-5-41	[illegible]
P	ADDED MAT'L NOTE IN B/M	1-5-[illegible]	[illegible]
	CH'D. SPEC. 46A1 CL. 4 & H.T. 2300 P.S.I. TO "NOTED" REM. MAT'L 195T FROM B/M.	"	—
Q	DIM. ⅝ WAS ½ (2 PLCS) NO WT. CHG.	4-19-43	[illegible]
R	REVISED NOTE "DRILL ⅛ DIA — ETC." WT. CHG. NEG.	7-9-43	DAORAN

LINE DRILL $\frac{3}{16}$

DRILL $\frac{5}{32}$ DIA. $1\frac{7}{8}$ DEEP
COUNTER BORE .453 $^{+.001}_{-.005}$ $\frac{7}{8}$ DEEP.
COUNTER BORE .5709 DIA. $\frac{11}{16}$ DEEP.
TAP $\frac{5}{8}$-18 NF-3 - $\frac{3}{8}$ DEEP
SPOT FACE $\frac{15}{16}$ DIA.

DRILL $\frac{21}{64}$ TO (.5709) DIA.
HOLE C'SINK 110° x $\frac{13}{32}$ DIA.
TAP $\frac{1}{8}$ PIPE, THD. NAT.
STD. TAPER.

28F1094

$\frac{1}{4}$R
$\frac{1}{16}$R (CAST)
$\frac{17}{32}$ CAST $\frac{9}{16}$
$2\frac{25}{64}$-0
$\frac{17}{32}$ ± CAST $\frac{9}{16}$
$5\frac{1}{2}$ DIA.
$3\frac{27}{64}$-$\frac{1}{64}$
$2\frac{25}{32}$ (REF.)
$3\frac{7}{8}$R
$3\frac{1}{8}$R
54°
27°
$\frac{1}{4}$ ± $\frac{1}{16}$
$5\frac{1}{4}$ +$\frac{1}{64}$ -.00 DIA.
$\frac{3}{16}$R.
$\frac{11}{32}$R.
$\frac{3}{32}$
$\frac{1}{4}$
$1\frac{1}{2}$
$\frac{7}{8}$
$3\frac{1}{8}$
$2\frac{7}{8}$
$3\frac{7}{8}$
$3\frac{15}{32}$
$1\frac{5}{8}$
$2\frac{1}{4}$
$\frac{1}{8}$

CAST LUG $\frac{3}{8}$ THICK
STRADDLE MILL $2\frac{1}{8}$ DIA.
TO DIMS. SHOWN
$\frac{5}{16}$R.

.510 .506
$1\frac{3}{32}$
$\frac{15}{16}$
.385±.005 (N)

REAM .437 ±.0005
$\frac{11}{16}$ DIA.
$\frac{3}{4}$ DIA.

THD $1\frac{1}{8}$-18 NS-B
MAX 2 IMPERFECT THDS.
$1\frac{1}{8}$ DIA.
$\frac{29}{32}$ DIA.
$\frac{1}{16}$R.
$\frac{1}{16}$
45°
$\frac{1}{4}$
$\frac{5}{8}$
$\frac{1}{2}$
$\frac{1}{4}$
$\frac{5}{16}$
2.875±.002
2 CUTTER RAD.

DRILL #10 (.193)
$\frac{15}{32}$
$\frac{1}{4}$
.875 .865
$\frac{5}{16}$
$\frac{7}{16}$
1.125±.005

3. ALL FILLETS $\frac{3}{16}$ RAD
2. ALL OUTSIDE CORNERS $\frac{1}{16}$ R.
1. ALL UNDIMENSIONED WALL THICKNESS $\frac{1}{8}$

(P) MATERIAL NOTE:
1-AL. ALLOY 195T4, SPEC. AN-QQ-A-390
CL. I. 29,000 P.S.I.
2-AL. ALLOY 195T6, SPEC. AN-A-6
CL. II. 32,000 P.S.I.

SP-6 FED. PRIME
[redacted]

	XPAY-1	28F1096	2								
	PB2Y-3	28F1096	2								
	28-5 ALL		2 EA.								
	PBY-5B		2								
	PBY-5A		2								
	PBY-5	28F1096	2								
	PBY-4	28F1096									
	PBY-4	28F1096									
	PBY-3	28F1096-1									
	PBY-3	28F1096									
	PBY-2	28F1096-1									
	PBY-2	28F1096									
	PBY-1	28F1096-1									
	PBY-1	28F1096									

O.H.	MODEL	NEXT ASSY.	REQ.	ST'D PARTS	LH REQ.	RH REQ.	PART NO.	LH REQ.	RH REQ.
REQUIREMENTS PER AIRPLANE			MAT.	PARTS LIST PER ASST.					

REPLACES	APPROVED [redacted] DATE 7-1-37
REPLACED BY	CALC. WT. 732 ACT. WT.
LIMIT ON DIMENSIONS UNLESS OTHERWISE SPECIFIED ± ¼ & ± 1°	SCALE 12"=1'-0"
[redacted]	QC
	NAVY AL. ALLOY CASTING
	MATERIAL

				LINDSEY	[illegible]	MILLER	
NOTED	NOTED	Z-P-2 [illegible] GP		2-19-37	7-1-37		
SPEC.	HEAT TREAT	FINISH		DRAFT	CHECK	EXAM.	ENG.

CONSOLIDATED AIRCRAFT CORP.
[redacted]
STAMP PT. No. WHERE SHOWN

NAME
FLANGE
FURNISHINGS FLARE CAN

OPP. HAND

SIZE D 28F1094

SUPPLIES & EQUIPMENT CLASSIFICATION			
LET	ALTERATION	DATE	BY
K	TRACED	7-1-37	
L	STRADDLE MILL WAS SPOT FACE -		
	DIMS. ADDED	11-2-37	LAVERS
M	CHANGE DIM. TO ⅝ WAS ½	10-7-40	LABE
N	.3851.003 WAS .3911.002, REMOVED		
	NOTE "R⅛ CORE."	12-5-41	
P	ADDED MAT'L NOTES IN B/M	1-5-42	
	CH'D. SPEC. 46A1 CL 4 & H.T. 23000		
	P.S.I. TO "NOTED" REM. MATL 195T		
	FROM B/M.		
Q	DIM. 5/8 WAS ½ (2 PLCS) NO WT. CHG.	4-19-43	
R	REVISED NOTE "DRILL ⅛		
	DIA — ETC." WT. CHG. NEG.	7-9-43	

LINE DRILL $\frac{3}{16}$

DRILL $\frac{5}{16}$ DIA. $1\frac{7}{8}$ DEEP
COUNTER BORE .453 $^{+.001}_{-.000}$ $\frac{7}{8}$ DEEP.
COUNTER BORE .3709 DIA. $\frac{11}{16}$ DEEP.
TAP $\frac{5}{8}$-18 NF-3 - $\frac{3}{8}$ DEEP
SPOT FACE $\frac{15}{16}$ DIA.

DRILL $\frac{21}{64}$ TO (.5709) DIA.
HOLE C'SINK 110° x $\frac{13}{32}$ DIA.
TAP $\frac{1}{8}$ PIPE THD NAT.
STD. TAPER.

28F1094

CAST LUG $\frac{3}{8}$ THICK
STRADDLE MILL $2\frac{1}{8}$ DIA
(L) TO DIMS. SHOWN

REAM .437 $^{+.0005}_{-.0000}$

THD $1\frac{1}{8}$-18 NS-B

MAX 2 IMPERFECT THDS.

DRILL #10 (193)

2 CUTTER RAD.

1. ALL FILLETS $\frac{3}{16}$ RAD
2. ALL OUTSIDE CORNERS $\frac{1}{16}$ R.
3. ALL UNDIMENSIONED WALL THICKNESS $\frac{1}{8}$

(P) MATERIAL NOTE:
1-AL. ALLOY 195T4, SPEC. AN-QQ-A-390 CL. I. 29,000 P.S.I.
2-AL. ALLOY 319 ST6, SPEC. AN-A-5 CL. II. 32,000 P.S.I.

SP-GREEN PRIME

XP4Y-1	28F1096	2	
PB2Y-3	28F1096	2	
28-5 ALL		2 EA.	
PBY-5B		2	
PBY-5A		2	
PBY-5	28F1096	2	
PBY-4	28F1096		
PBY-4	28F1096		
PBY-3	28F1096-1		
PBY-3	28F1096		
PBY-2	28F1096-1		
PBY-2	28F1096		
PBY-1	28F1096-1		
PBY-1	28F1096		

O.H.	MODEL	NEXT ASSY.	REQ.	STD PARTS	LH REQ.	RH REQ.	PART NO.	LH REQ.	RH REQ.
REQUIREMENTS PER AIRPLANE				MAT.	PARTS LIST PER ASSY.				

REPLACES
REPLACED BY
LIMIT ON DIMENSIONS UNLESS OTHERWISE SPECIFIED ± .1 ∠ ½°
APPROVED 7-1-37 DATE
CALC. WT. ACT. WT.
SCALE 12" = 1'-0"
AC
NAVY AL. ALLOY CASTG
MATERIAL

SPEC.	HEAT TREAT	FINISH	DRAFT	CHECK	EXAM.	ENG.
NOTED	NOTED	Z-P-2 GP	2-29-36 7-1-37			

CONSOLIDATED AIRCRAFT CORP.
STAMP PT. No. WHERE SHOWN

NAME
FLANGE
FURNISHINGS FLARE CAN

OPP. HAND
SIZE D
28F1094

LET	ALTERATION	DATE	BY
J	TRACED UP TO DATE	3-24-37	V.I.B.
K	ADDED NOTE "NOT LESS THAN 5/32" CHANGED 1/8 TO ADEX. 5/32 REF'S SECTION B-B & DIMENSIONS VAR. ACCORD.	5-29-37	
L	[illegible]	6-10-38	
M	REMOVED 2 7/16 DIM & ADDED [illegible]		
	& 1 & 20° DIM'S. NEG. WT CHG.	8-22-38	
N	CH'D. "CASTING ADC 0A 195T4" TO 1-5-43		
	AL. ALLOY CASTING. CH'D SPEC.		
	TO AICL 4 & H.T. 29,000 P.S.I.		
	TO "NOT B.D." ADDED MAT'L NOTE		
	& PBY-5 REQ. PER RELEASES.		
P	*#30(.128) 3 HOLES. C'S'K 115° X 1/16		
	WAS "DRILL 1/8 DIA. 3 HOLES C'SINK		
	78° X 1/16" NEG. WT. CHG.	10-18-43	WELCH

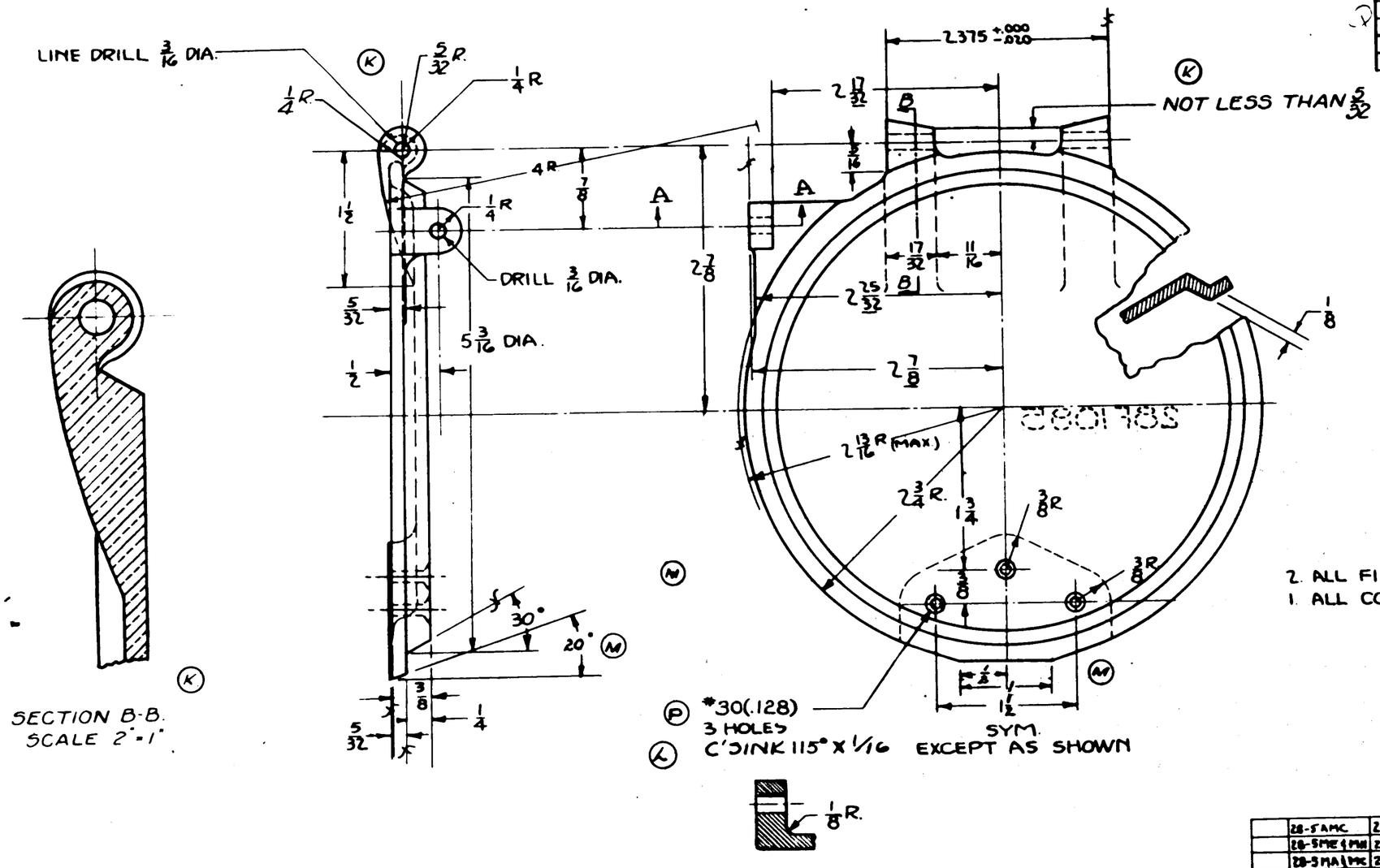

2. ALL FILLETS 3/16 R.
1. ALL CORNERS 1/16 R.

(N) MATERIAL NOTE:
1-AL. ALLOY 195T4, SPEC. AN-QQ-A-390 CL. I. 29,000 P.S.I. OR
2-AL. ALLOY S-195T6, SPEC. AN-A-5 CL. II. 32000 P.S.I.

CP-GREEN PRIME

FINISH CODE	
Z	
P	
AP	
C	

O.H.	MODEL	NEXT ASSY.	REQ.	STD PARTS	LH REQ.	RH REQ.	PART NO.	LH REQ.	RH REQ.
	28-5 AMC	28A1006	2						
	28-5 ME & MH	28A1006	2 EA.						
	28-5 MA & MC	28A1006	2 EA.						
	PBY5	28A1006	R						
	28-5 AMH	28A1006	2						
	PBY-5B	28A1006	2						
	PBY-5A	28A1006	2						
	XPBY-1	31A039-R	1						
	XPBY-1	31A039-L	1						
	PB2Y-3	29A3045	2						
	PBY-4	28A1006-31							
	PBY-3	28A1006	2						
	PBY-2	28A1006							
	PBY-1	28A1006							
	XP3Y-1	28A1006	2						

REPLACES		DATE 2-28-36
REPLACED BY		
LIMIT OR DIMENSIONS UNLESS OTHERWISE SPECIFIED ± 1/32		
CALC. WT. .25	ACT. WT.	SCALE 12" = 1FT.
NAVY AL. ALLOY CASTING	NOTED	NOTED
MATERIAL	SPEC.	HEAT TREAT

REQUIREMENTS PER AIRPLANE	MAT.	PARTS LIST PER ASSY.
		LIVER / GREEN
	Z-P-28	28-3-36 / 3-3-36
	FINISH	DRAFT / CHECK / EXAM. / ENG.

CONSOLIDATED AIRCRAFT CORP. BUFFALO, N.Y.

STAMP PT. No. WHERE SHOWN

NAME
DOOR FURNISHINGS FLARE ADAPTER

OPP. HAND

SIZE D

28F1095

BLAKISTON-SHOLEDDEN CO., INC., BUFFALO
IMPERIAL TRACING CLOTH

SUPPLIES & EQUIPMENT CLASSIFICATION			
LET	ALTERATION	DATE	BY
C	PREVIOUS		
D	ON FACE OF DWG., REPLACED FOR -3, SPEC. "4130" WITH "AN-QQ-S-685" 4615" FOR -1, REPLACED "4130" WITH "AN-QQ-S-684". FOR -4, REPLACED "4130" WITH "AN-WW-T-850" IN M.T. B'LY, REPLACED "NORMALIZE" WITH "NOTED" TO EACH ADDED NOTE, " NORMALIZE 90,000 TO 125,000 #/in² T.S. AFTER WELDING" (NO WT. CHG.)	6-12-41	
E	ON FACE, FOR -4, REMOVED "C.M. STEEL, ½ O.D. - .035 WALL, NAVY SPEC. AN-WW-T-850" ADDED NOTE "E" NO WT. CHG.	9-20-41	

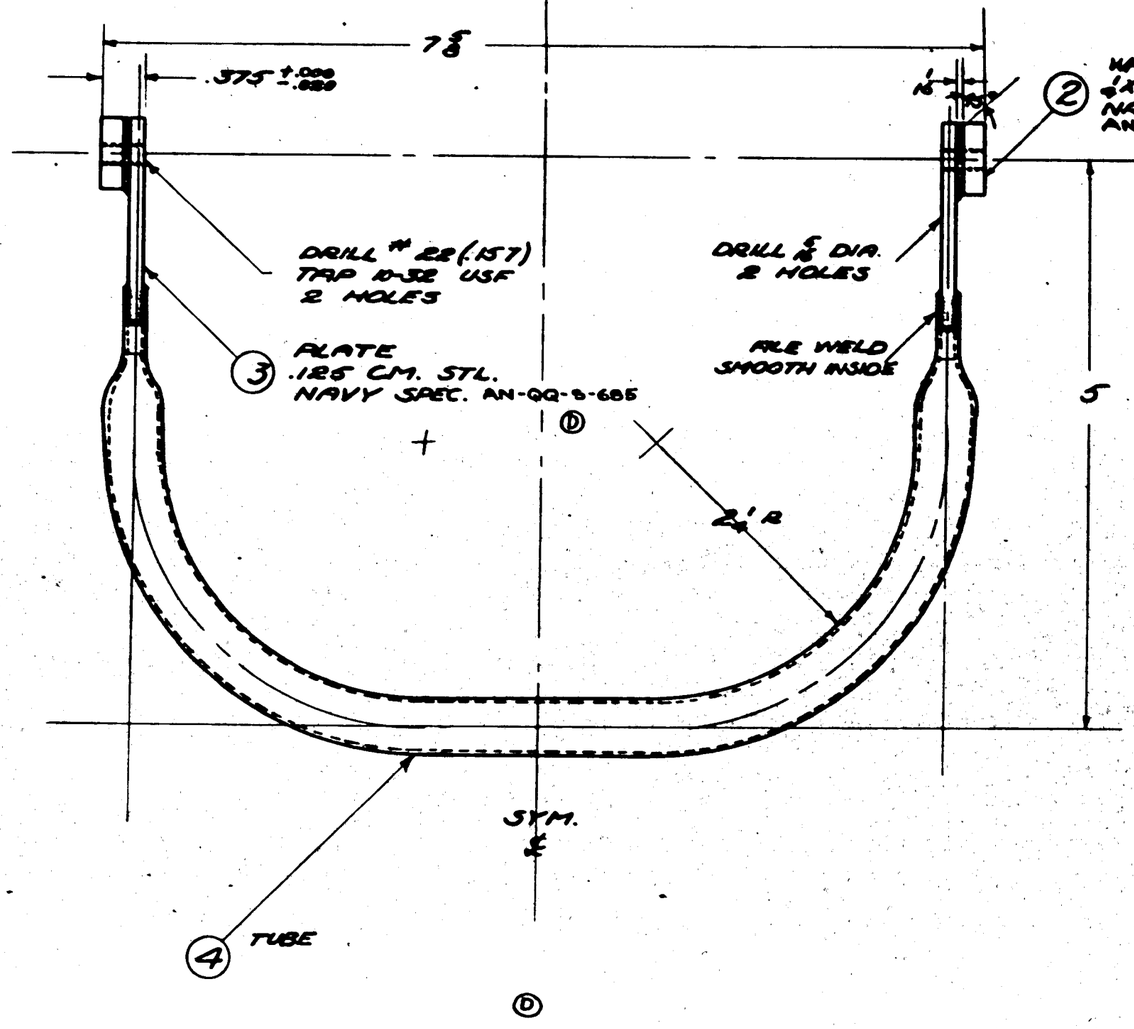

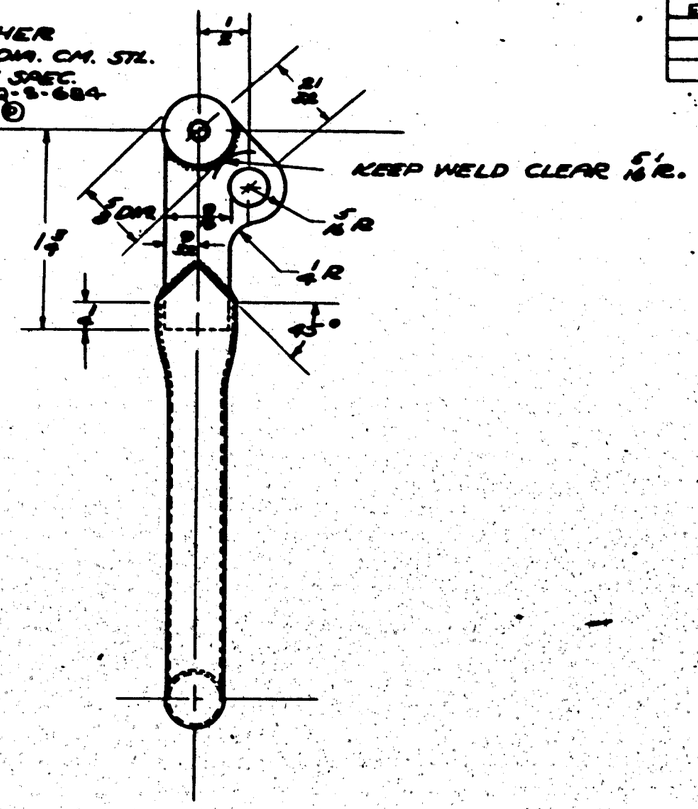

FINISH -
C - CADMIUM PLATE
P - P21 PRIMER
GP - GREEN PRIME
HEO - HOT RAW LINSEED OIL

Ⓓ
NOTE -
1. NORMALIZE 90,000 TO 125,000 #/in² T.S. AFTER WELDING.
Ⓔ 2. MAT'L. FOR -4 MAY BE-
(A) ½ O.D. X .035 WALL, C.M. STEEL TUBE, SPEC. AN-WW-T-850, OR
(B) ½ O.D. X .035 WALL, S.A.E. X4130 WELDED STEEL TUBING, SPEC. AN-T-3.

	O.H.	MODEL	NEXT ASSY.	REQ.	STD PARTS	LH REQ.	RH REQ.	PART NO.	LH REQ.	RH REQ.
		28-5*3	28A1006	28A						
		PBY-5	28A1006	2						
		PB2Y-2	28F1813	1						
		PB2Y-2	28F1814	1						
		PBY-5B	28A1006	2						
		PBY-5A	28A1006	2						
		XPBY-1	31A039-R	1						
		XPBY-1	31A039-L	1						
		PBY-3	28A3045	2						
		PBY-4	28A1006							
		PBY-3	[redacted]							
		PBY-2	[redacted]							
		PBY-1	[redacted]					-9	1	
		XPBY-1	[redacted]					-11	2	
								REF A28-2		

REPLACES	APPD. [redacted] DATE	REQUIREMENTS PER AIRPLANE	MAT.
REPLACED BY	CALC. WT. 30 ACT. WT.		
LIMIT ON DIMENSIONS UNLESS OTHERWISE SPECIFIED ±	SCALE 12" = 1'0"		
[redacted]	DRAWN NOTED	NOTED	NOTED
	MATERIAL	SPEC.	HEAT TREAT

CONSOLIDATED AIRCRAFT CORP. BUFFALO, N.Y.

PARTS LIST PER ASSY.

		Loaded	Released
		3-29-41	4-7-41
		DRAFT	CHECK

FINISH [redacted] 3-29-41

NAME LEVER ASSY. - FUNK - FLAP LOCK

OPP. HAND NONE

DWG. NO. 28A1006

SUPPLIES & EQUIPMENT CLASSIFICATION			
LET	ALTERATION	DATE	BY
O	T.B.R.D.	6-30-37	[redacted]
P	REMOVED AC-505-G-4 & NOTE "CHECK---DEEP" & ADDED AC5GG-C10-6 & NOTE "AFTER---ONLY"	[illegible]	[illegible]
Q	E.O. AS1639 ADDED: "ROUGH CASTING" TO NOTE "-2 AL. ALL---HT. 28,000 #/□" & NOTE "4 MACHINED CASTING" & -4 (1) TO B/M. REMOVED REQ (1) FOR -2. NO WT. CH'G.	10/13/42	[illegible]
R	ON FACE AT -2 REMOVED NOTE "ALUM. ALLOY CASTING, ALCOA "195T4, NAVY "46A1 CL4, HT 28,000 #/□" ADDED "MATERIAL NOTE." NO WT. CH'G.	8-21-43	ROOM

(R) MATERIAL NOTE:
-2 MAY BE MADE FROM:
1.- AL. ALLOY CASTING 195T4, SPEC. AN-QQ-A-380 CL1, T.S. 28,000 P.S.I.; OR
2.- AL. ALLOY CASTING 319ST6, SPEC. AN-A-5 CL.2, T.S. 32,000 P.S.I.

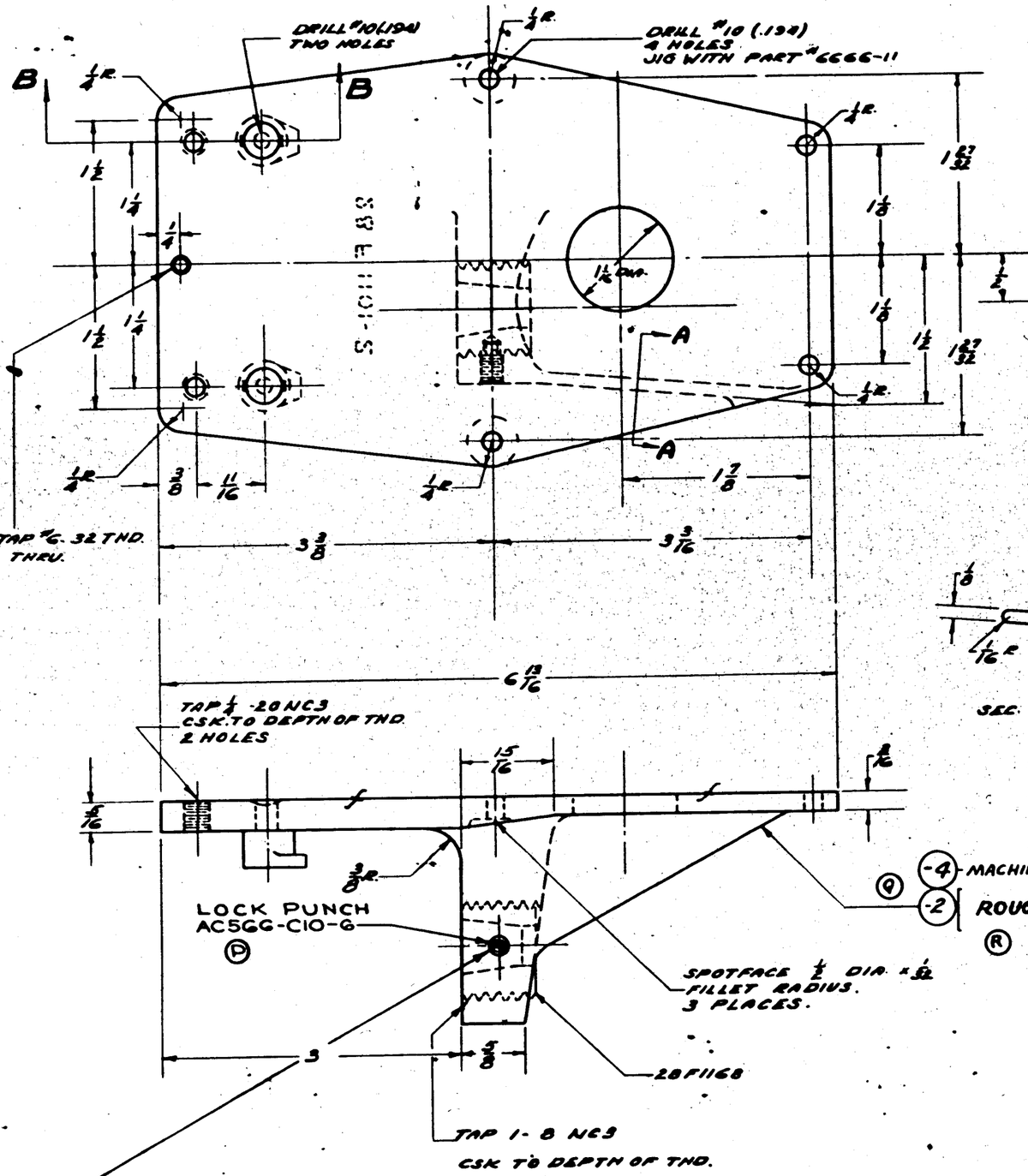

2.- ALL FILLET RADII 1/4 EXCEPT AS NOTED.
1.- CASTING MUST BE SMOOTH, FREE FROM FINS AND SPRUES.

6P-GREEN PRIME

(P) NOTE:
AFTER ADJUSTMENT OF 28F1168 ON ASSY DRILL #25 (.1495) - 7/16 DEEP; TAP 10-24 IN -2 ONLY.

	PBY-5	28F1091	1						
	PBY-5A	↑	1						
	PBY-5B	↓	1						
	PBY-4	28F1091							
	PBY-3	28F1091							
	PBY-2	28F1091							
	PBY-1	28F1091							
	XPBY-1	28A1009							

O.H.	MODEL	NEXT ASSY.	REQ.	ST'D PARTS	LH REQ.	RH REQ.	PART NO.	LH REQ.	RH REQ.
				AC5GG-C10-6	1		28F1101-4	1	
							28F1388	2	
							28F1168	1	
							28F1101-B		1

REQUIREMENTS PER AIRPLANE			MAT. JEF.	PARTS LIST PER ASSY.			
AC				ORIGINAL	[illegible]	GREEN	
NAVY NOTED	NOTED	NOTED	Z-P-2GP	2-24-36	7-1-37	REV. 6	
MATERIAL	SPEC.	HEAT TREAT	FINISH	DRAFT	CHECK	EXAM.	ENG.

REPLACES
REPLACED BY
LIMIT OR DIMENSIONS UNLESS OTHERWISE SPECIFIED ± [illegible]
[redacted] 6-30-37 DATE
CALC. WT. ACT. WT.
SCALE 12"=1'-0"
CONSOLIDATED AIRCRAFT CORP. BUFFALO, N.Y.
STAMP PT. No. WHERE SHOWN

NAME BASE-FIXED-EQUIPMENT MARK II-B PELORUS-DRIFT SIGHT
OPP. HAND
SIZE D
28F1101

SUPPLIES & EQUIPMENT CLASSIFICATION			
LET	ALTERATION	DATE	BY
C	TRACED UP TO DATE	4-4-39	S.A.W.
D	ADDED NOTE (C.O. 6730)	[illegible]	[illegible]
E	AN3-D5A WAS AN3-D5; AN960-D10 WAS AN845-D10; NOTE "STAKE ENDS OF BOLTS" REMOVED	4-8-40	[illegible]
F N	REPLACE AN 442-D8A RIVET WITH AN-F8A-D832-7 SCREW & AN365-D832 NUT ON FACE OF DRWG. & R/H	4-11-41	[illegible]

NOTE: AVOID SCREW LOCATION

STRINGER "4

28F1357 CABLE

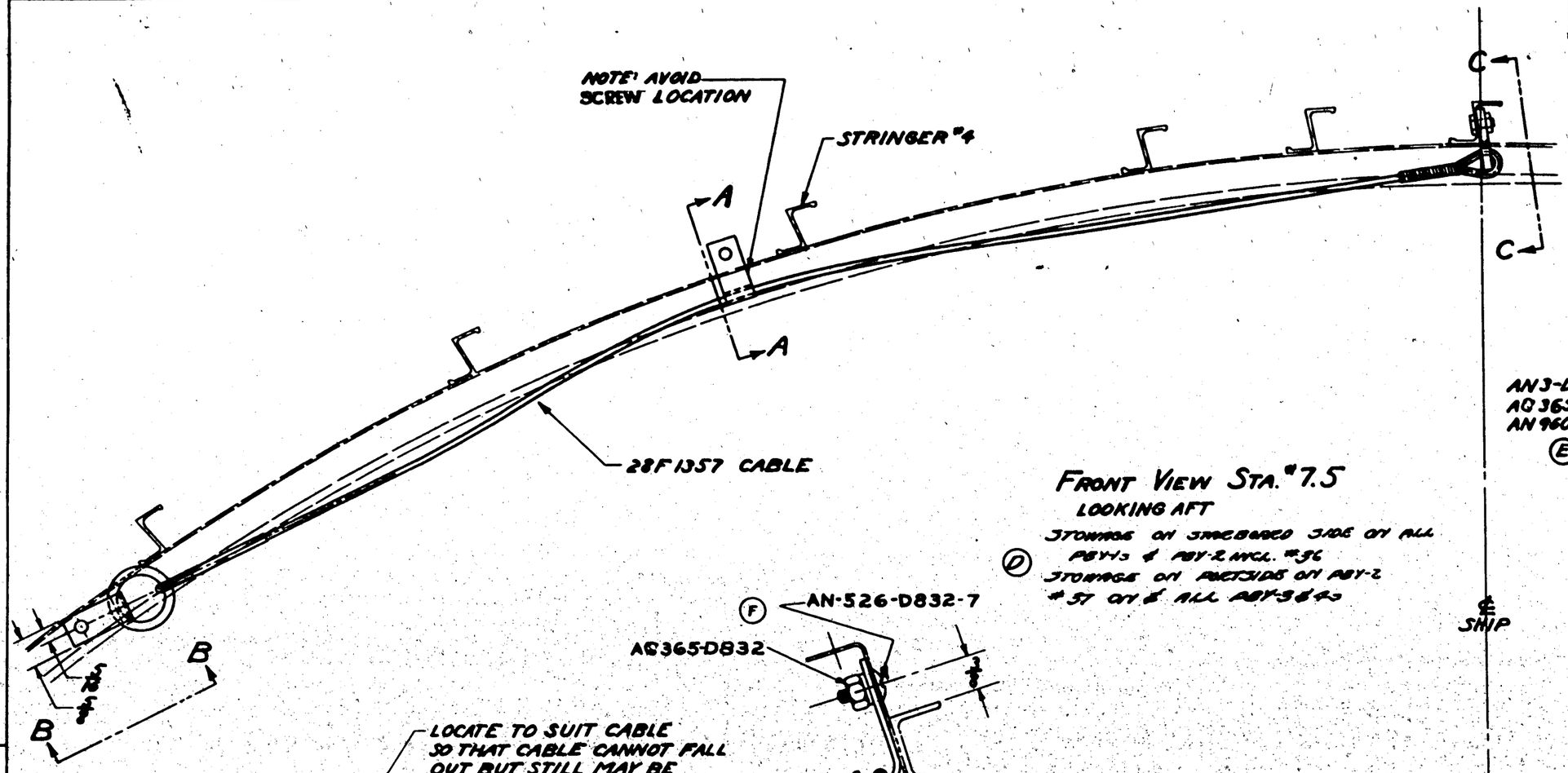

FRONT VIEW STA. "7.5
LOOKING AFT

(D) STOWAGE ON STARBOARD SIDE OF ALL PBY-1'S & PBY-2 INCL. #36
STOWAGE ON PORTSIDE OF PBY-2 #37 ON & ALL PBY-3 & -4's

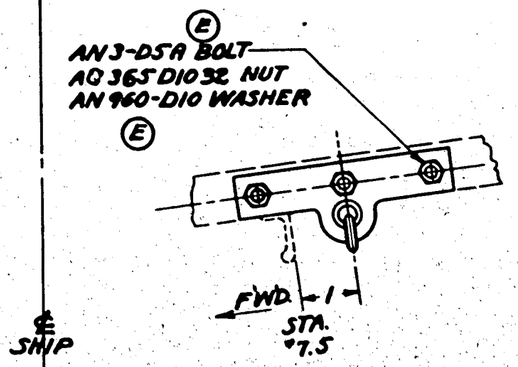

SECTION C-C

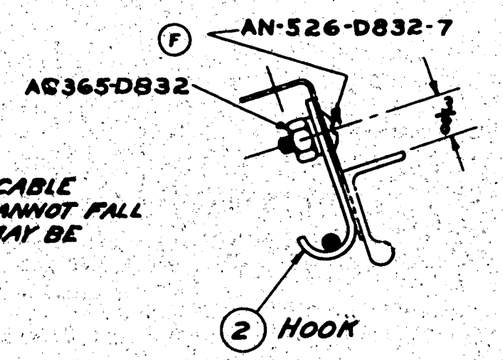

SECTION A-A
SCALE - FULL SIZE

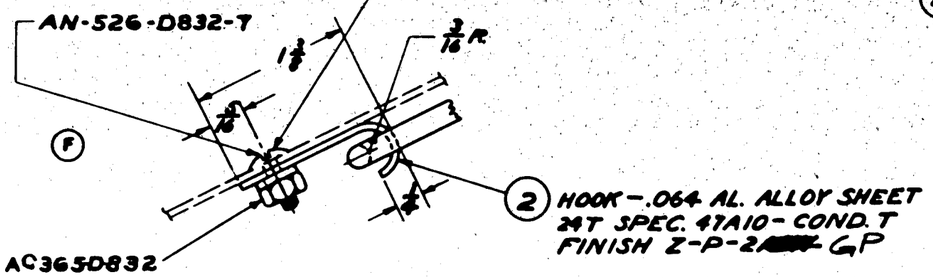

VIEW B-B
SCALE - FULL SIZE

GP-GREEN PRIME

	PBY-5B	28A1004	1								
	28-5AMC	28A1004									
	28-5 M5	28A1004		AC365D832	2						
	PBY-5 5A	28A1004	1EA	AR526-D832-7	2						(F)
	PBY-4	28A1004		AN960-D10	3		28F1357	1			
	PBY-3	28A1004		AN365-D1032	3						(E)
	PBY-2	28A1004		AN3-D5A	3						
	PBY-1	28A1004					28F1126-2	2			

O.H.	MODEL	NEXT ASSY.	REQ.	ST'D PARTS	LH REQ.	RH REQ.	PART NO.	LH REQ.	RH REQ.

REPLACES

REPLACED BY

LIMIT ON DIMENSIONS UNLESS OTHERWISE SPECIFIED + −

[redacted] 5-20-36 DATE

1.51 CALC. WT. ACT. WT.

SCALE 4" = 1'0" metric

AC

NAVY NOTED MATERIAL

REQUIREMENTS PER AIRPLANE

MAT.

PARTS LIST PER ASSY.

NOTED SPEC. | NONE HEAT TREAT | NOTED FINISH

LIVERS [illegible] 5-7-36 (4-6-2)

DRAFT | CHECK | EXAM. | ENG.

CONSOLIDATED AIRCRAFT CORP. BUFFALO, N. Y.

STAMP PT. No. WHERE SHOWN

NAME SAFETY BELT CABLE ARMAMENT TUNNEL GUN

OPP. HAND

SIZE D

28F1126

SUPPLIES & EQUIPMENT CLASSIFICATION			
LET	ALTERATION	DATE	BY
C	TRACED TO DATE	9-25-37	[redacted]
D	CHANGED: AN520-8 TO AN526-832-20 & AN345-8 TO AN340-8 ON DRAWING AND IN B/M	10-8-37	[redacted]
E	ADDED PB2Y-3R TO REQ'T'S PER AIRPLANE BLOCK NO WT. CHG.	4/17/38	[redacted]

PBY5

E.O BO342 R-13

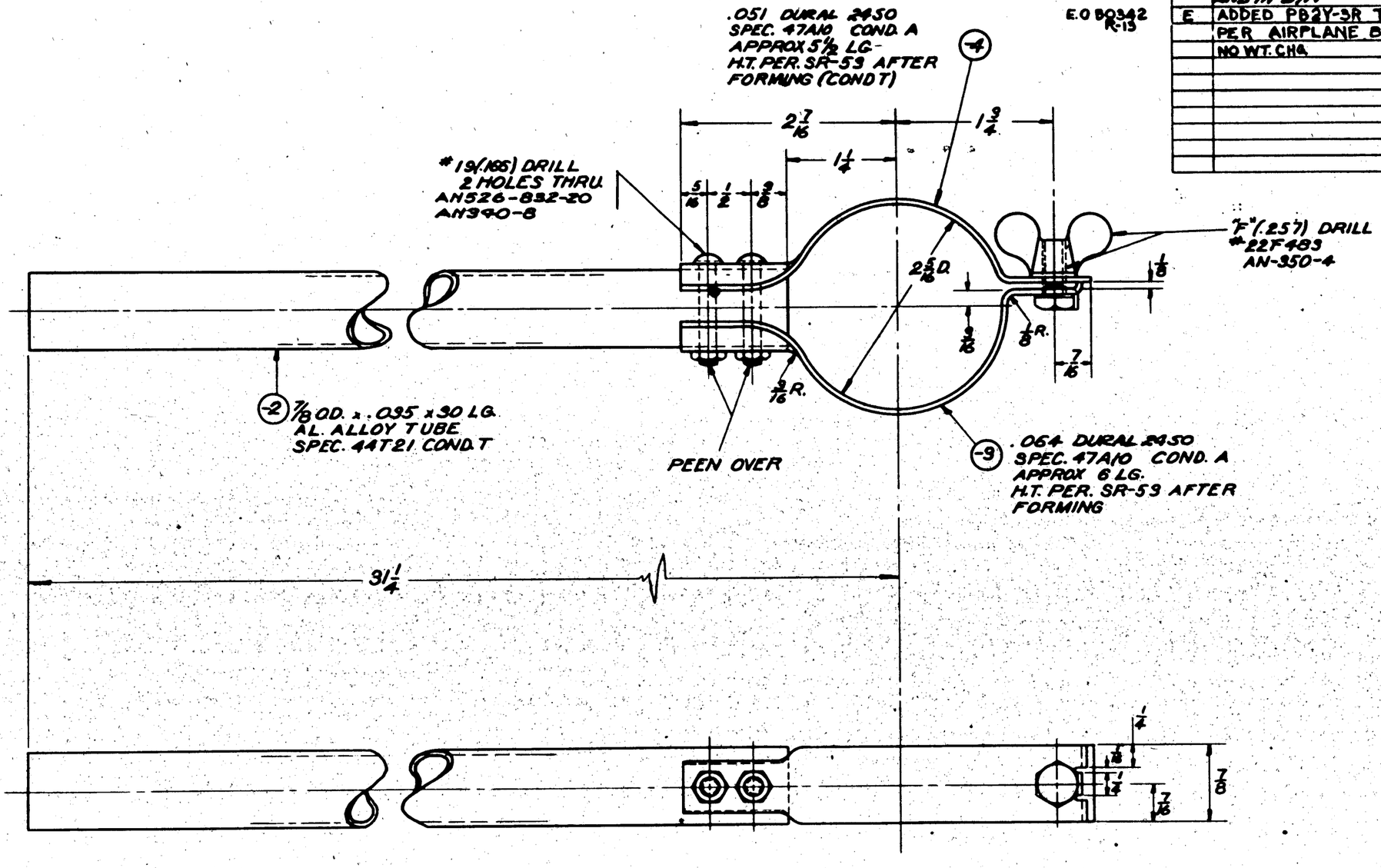

GP-GREEN PRIME

[redacted]

FINISH — Z-2 ~~ANV~~ BEFORE INSTALLING 22F483 - AN350-4 - AN520-8 & AN345-8

	PB2Y-3R	29F6057	1									
	PBY-5A	28A5100	1									
	PB2Y-3	29F3170	1									
*1-24	PBY-5	28A4080	1									
*254	PBY-5	28A5100	1									
	PB2Y-3	29A1011	1							22F483	1	
	PBY-4	28A032										
	PBY-3	28A032								-4	1	
	PBY-2	28A032		AN526-832-20	2					-3	1	
	PBY-1	28A032		AN340-8	2					28F1139-2	1	
	XPBY-1	28A032		AN350-4	1							
						LH	RH				LH	RH
	O.H.	MODEL	NEXT ASSY.	REQ.	ST'D PARTS	REQ.			PART NO.		REQ.	

REPLACES								
REPLACED BY								
LIMIT ON DIMENSIONS UNLESS OTHERWISE SPECIFIED ± 1/32	APPROVED [redacted] DATE 3-25-37							
	CALC. WT. GP	ACT. WT.						
	SCALE 12"=1'-0"	REQUIREMENTS PER AIRPLANE			MAT.	PARTS LIST PER ASSY.		
	AC				GP	3-25-37	3-11-38	
	NAVY NOTED	NOTED	NOTED	NOTED & [redacted]		HACK 3-29-37	Green	
	MATERIAL	SPEC.	HEAT TREAT	FINISH		DRAFT	CHECK	EXAM. ENG.

CONSOLIDATED AIRCRAFT CORP. BUFFALO, N. Y.

STAMP PT. No. WHERE SHOWN

NAME HANDLE - FURN. - SMOKE GRENADE

OPR. HAND

SIZE D 28F1139

LET	SUPPLIES & EQUIPMENT CLASSIFICATION — ALTERATION	DATE	BY
C	TRIMMED TO SIZE	2-M	[illegible]
D	[illegible]	[illegible]	10-1-37
E	CHG'D -5 TO QST61-K5-4½ E	4-12-[illegible]	[illegible]
	-6 TO QST61-K5-2½ (WERE SAME DIM'S BUT NOT "Q" NUMBERS)		
F	AN912-D4 REPLACED BY AN960D8 & AN960D8-L WASHER & CLIP REPLACED BY AN960D8-7 & AN960D832	4-11-41	[illegible]
G	ADDED 2½ PART FOR -E1 ONLY	1-11-42	[illegible]
H	ADDED -1E ASS'Y (WT. & CHG. REQ.)	12-15-42	[illegible]
J	REVISED REQ. PER AIRPLANE MOCK UP WT. CHG.	2-15-43	[illegible]
K	ON FILE & MFR. REMOVED		
	-1E ASS'Y. WT. & CHG. REQ.	6-29-43	[illegible]

FOR INST. OF -2 L.H. SIDE SEE DWG 28F4007

(F) AN515D8-7 AN960D832

(2) CLIP

PELORUS -DRIFT SIGHT MARK II-B REF- DWG. "6666"

WEBBING QST61-K5-8½ (E)

(F) AN515D8-8(A) AN960D832

(3) BRACKET ASSY.

10 APPROX. 7½ FOR PBY-5A ONLY

FORWARD

STA 3.33

STRINGER "L"

STRINGER "M"

PORT SIDE OF HULL

[redacted] GP GREEN PRIME

PELORUS STOWAGE
SCALE: 6"=1'-0"

4⅜ — 11/32 — 5/16 — 1½ — ⅝ — SYM

FLAT PATTERN

HOLE LOCATIONS

BREAK CORNERS

2¾ — 1½ — ½ BEND R — 5/8 R — AN 4LS-4 — SYM

WEBBING QST61-K5-4½ (E)

6° — 17/32 — 5/8

(4) BRACKET .040 AL. ALLOY 24A CONDA SPEC 47A10 HT SPEC 3R 53

HOLE LOCATIONS

DETAIL OF BRACKET ASSY PART -3

SCALE: FULL SIZE

2 3/16 — 1½ — 4 HP — 5/8 R — 5/16 — 3/32 R — 11/16

DETAIL OF CLIP-PART -2
.040 AL. ALLOY 24A COND A
SPEC 47A10 H.T. SPEC 3R 53
SCALE FULL SIZE

PARTS USED IN -3 ASSEMBLY

(E)		QST61-K5-4½	1	1	28F1148-4	1					
		AN525-4									
		AN515D8-8	2								
		AN515D8-7	2								
		AN960D832	4								
	-0	PBY-5A	28F1091	1			4				
	-0	PBY-5	28F1091	1			4				
	-0	PBY-4	28F1091				5				
	-0	PBY-3	28F1091								
	-0	PBY-2	28F1091								
	-0	PBY-1	28F1091	1					-3	1	
	-0	XPBY-1	28F1091	1	QST61-K5-2½	1			-4	4	
							-0		PART NO.	-0	

C.70496 ONLY (77713)
C.70496 ONLY

REPLACES
REPLACED BY
LIMIT ON DIMENSIONS UNLESS OTHERWISE SPECIFIED ± [redacted]

APPROVED [redacted] DATE 4-8-37
CALC. WT. ACT. WT.
SCALE NOTED
AC
NAVY NOTED
MATERIAL

REQUIREMENTS PER AIRPLANE: O.H. | MODEL | NEXT ASSY. | REQ. | STD.
MAT. | SPEC. | HEAT TREAT | FINISH
PARTS LIST PER ASSY.

DRAFT	CHECK	ENGR.	STR.
4-5-37	4-8-37		

CONSOLIDATED AIRCRAFT CORP. BUFFALO, N.Y.
NOT PT. No. WHERE SHOWN

NAME PELORUS STOWAGE FIXED EQUIPMENT

OPP. HAND

D 28F1[illegible]

(H)(K) VIEW OF 12 [illegible]
LEAVING NOT [illegible]
AS [illegible] SAME AS [illegible] ASS'Y
EXCEPT AS NOTED

BEND 4

SUPPLIES & EQUIPMENT CLASSIFICATION			
LET	ALTERATION	DATE	BY
A	TRACED	5-26-37	V.T.B.
B	REMOVED PBY-5 REQ'MTS FOR 28F1177-1 & ADDED NEXT ASS'Y 28F5102	6-21-40	[redacted]
C	CHGD. MATL. FROM ST TO 50	9-18-42	[redacted]

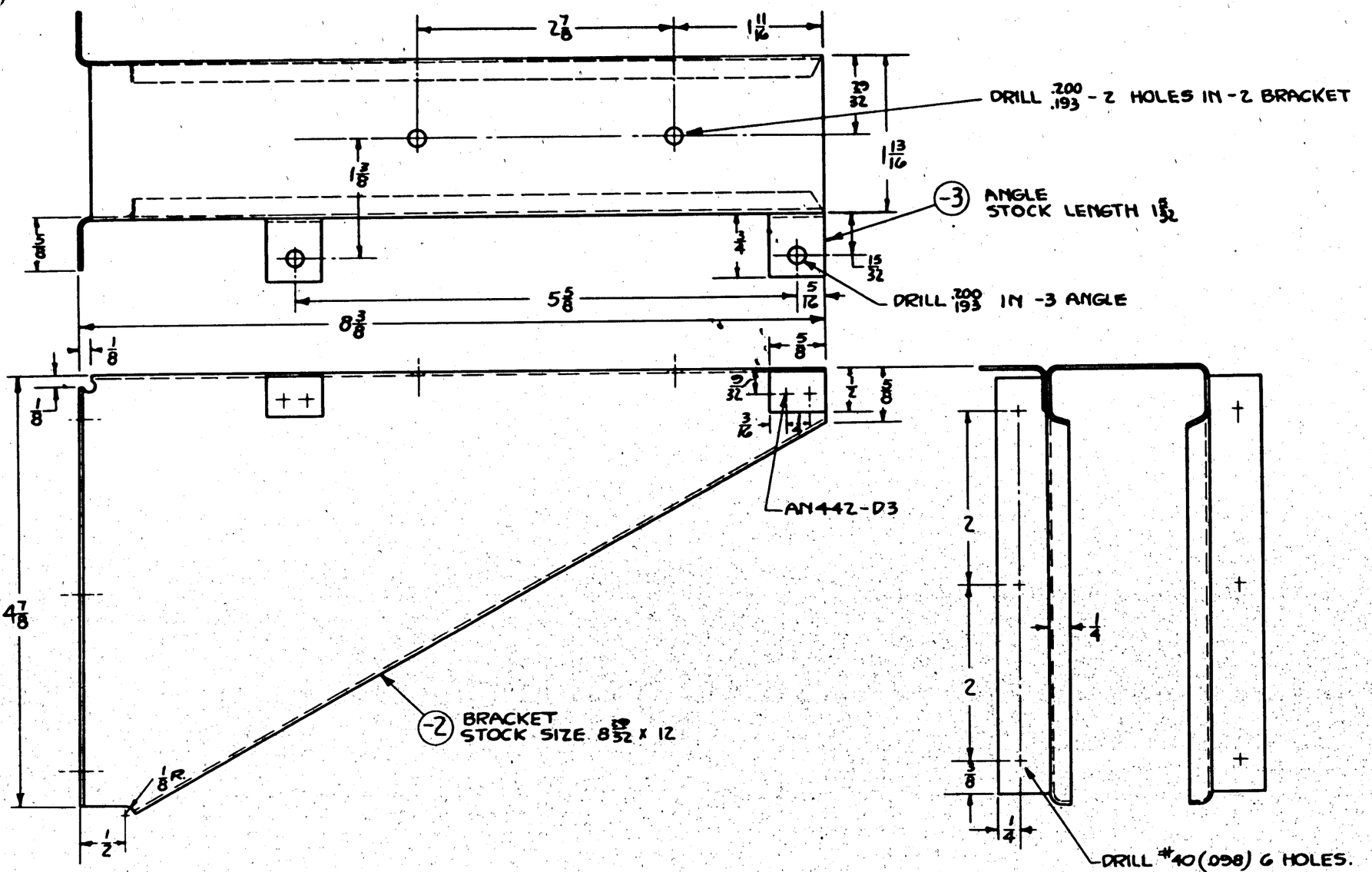

ALL BEND RADII 3/32 INSIDE R.

GP-GREEN PRIME

-1	PBY-5A	28F5102	1								
	PBY-5	28F5102	1								
-1	PBY-4	28F1191									
	PBY-4	28F1191									
-1	PBY-3	28F1191									
	PBY-3	28F1191									
-1	PBY-2	28F1191									
	PBY-2	28F1191									
-1	PBY-1	28F1191									
	PBY-1	28F1191									
-1	XPBY-1	28F1191								-3	2	2
	XPBY-1	28F1191		AN442-D3	4		DEFNTT-2			1	1
O.H.	MODEL	NEXT ASSY.	REQ.	ST'D PARTS	REQUIREMENTS PER AIRPLANE LH REQ.	RH REQ.	PART NO.			LH REQ.	RH REQ.

REPLACES	[redacted] APPROVED	3.26.37 DATE			
REPLACED BY	.30 CALC.WT.	ACT.WT.			
LIMIT ON DIMENSIONS UNLESS OTHERWISE SPECIFIED ± 1/32	SCALE 12" = 1'-0"				
[redacted]	AC –				
	NAVY .040 AL. ALLOY SHT. 24S0		4130-A	SR53	Z-P-2 GP.
	MATERIAL		SPEC.	HEAT TREAT	FINISH
	CONSOLIDATED AIRCRAFT CORP. BUFFALO, N. Y.				
	STAMP PT. No. WHERE SHOWN				

SUPPLIES & EQUIPMENT CLASSIFICATION			
LET	ALTERATION	DATE	BY
A	TRACED	3-26-37	V.I.B.
B	REMOVED PBY-5 REQ'MTS FOR 28F1178 & ADDED NEXT ASSY 28F5102	6-21-40	[redacted]

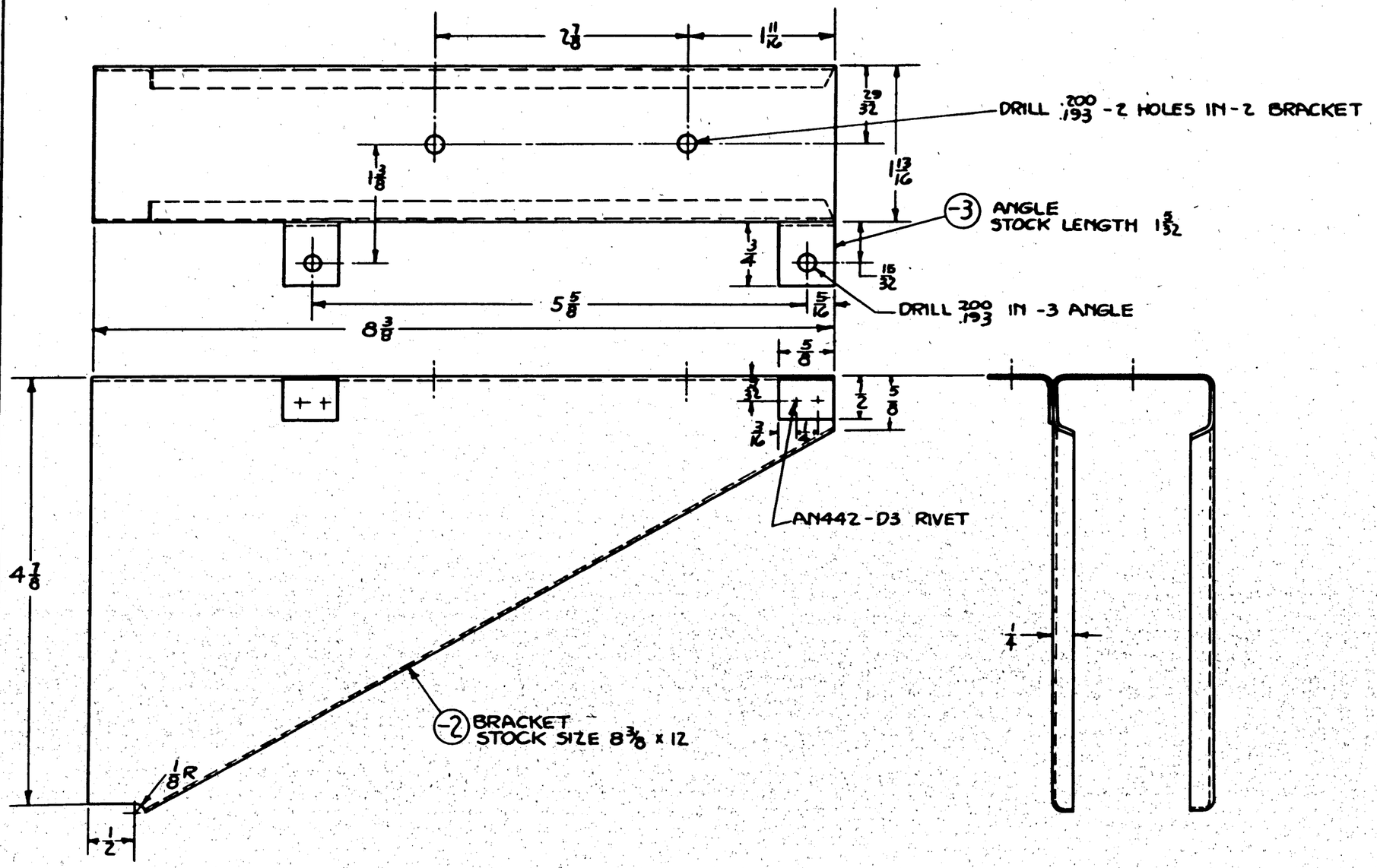

GP-GREEN PRINT
[redacted]

ALL BEND RADII 3/32 INSIDE R.

NOTE:-

THIS BRACKET IDENTICAL TO 28F1177 WITH THE EXCEPTION OF THE END FLANGES.

-R	PBY-5A	28F5102	1												
-1	PBY-5	28F5102													
-1	PBY-4	28F1191													
	PBY-4	28F1191													
-1	PBY-3	28F1191													
	PBY-3	28F1191													
-1	PBY-2	28F1191													
	PBY-2	28F1191													
-1	PBY-1	28F1191													
	PBY-1	28F1191													
-1	XP3Y-1	28F1191												-3	2	2
	XP3Y-1	28F1191		AN442-D3	4									-2	1	1

REPLACES	[redacted] APPROVED 3-26-37 DATE										
REPLACED BY											
LIMIT ON DIMENSIONS UNLESS OTHERWISE SPECIFIED ± 1/32	CALC.WT.	ACT.WT.	O.H.	MODEL	NEXT ASSY.	REQ.	ST'D PARTS	LH REQ.	RH REQ.	PART NO.	LH REQ.	RH REQ.
[redacted]	SCALE 12" = 1'-0"		REQUIREMENTS PER AIRPLANE				MAT.	PARTS LIST PER ASSY.				
	AC						GP					
	NAVY SHEET (24ST)	ORD. AL. ALLOY	4	NONE			2-P-2 [redacted]	DRAWN		2-11-37		
	MATERIAL		SPEC.	HEAT TREAT			FINISH	2-3-37	6-8-37	CN		
								DRAFT	CHECK	EXAM.	ENG.	

CONSOLIDATED AIRCRAFT CORP. BUFFALO, N.Y.

STAMP PT. No. WHERE SHOWN

NAME BRACKET - FURN. - G.F. RADIO RECEIVER & TRANSMITTER SUPPORT

OPP. HAND 28F1178-1

SIZE D 28F1178

SUPPLIES & EQUIPMENT CLASSIFICATION			
LET	ALTERATION	DATE	BY
A	TRACED	3-26-37	V.I.B.
B	CHGD MATL. FROM ST TO SO	9-19-42	[redacted]

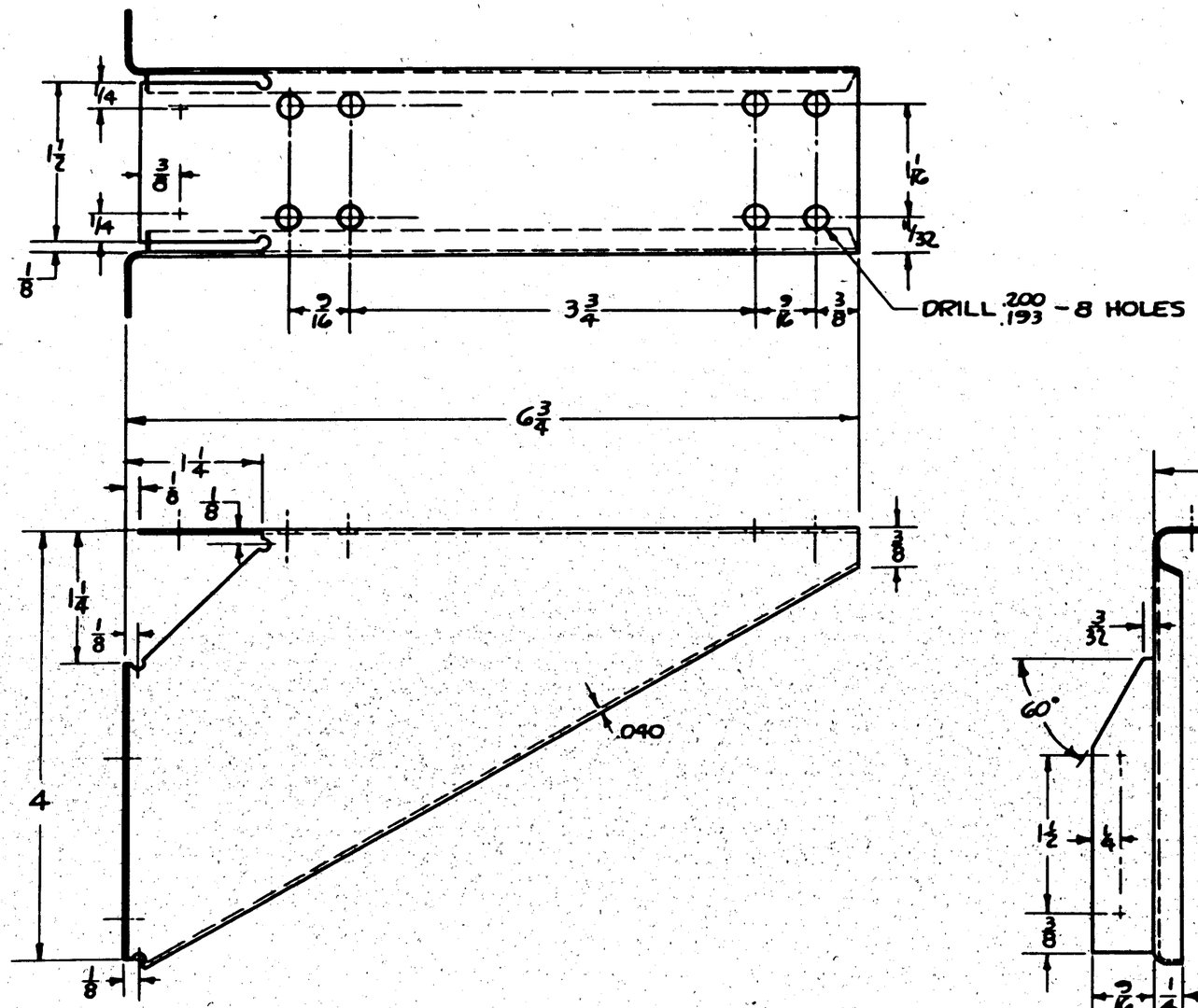

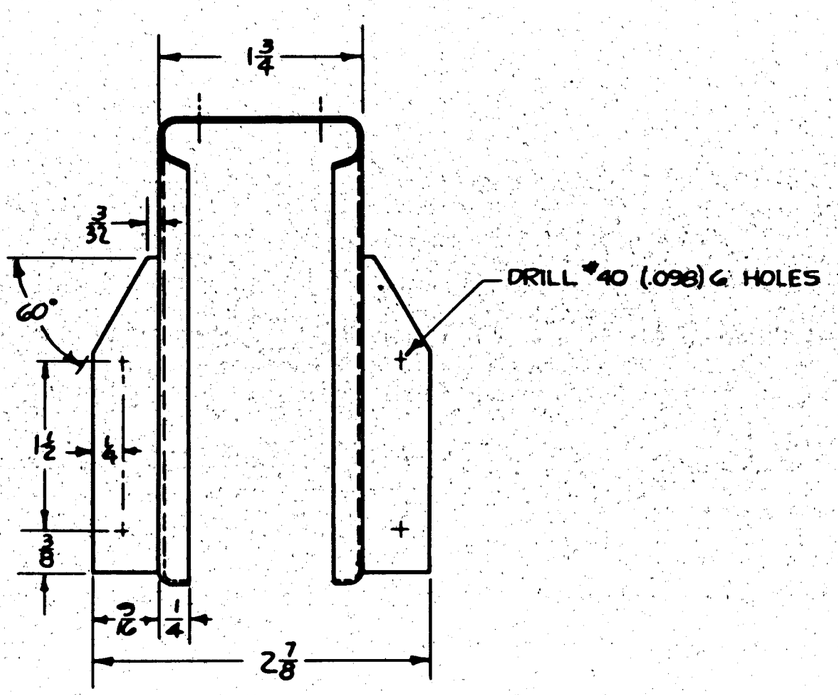

GP-GREEN PRIME FINISH CO.

[redacted]

ALL BEND RADII 3/32 INSIDE R.
STOCK SIZE 7 1/4 X 10 1/16

SUPPLIES & EQUIPMENT CLASSIFICATION			
LET	ALTERATION	DATE	BY
C	TRACED	9-26-37 / 12-8-37	ERN / Almond
D	CHG'D -2 MTRL FROM "SPONGE RUBBER" TO "HYCAR SPONGE - FABRIC COVERED." NO CHG IN MFR.	8-27-41	CHRIS
E	ON FACE FOR -2 ADDED NOTE "SYNTHETIC SPONGE --- CALIF." WAS "HYCAR SPONGE - FABRIC COVERED." NO WT. CHG.	7-5-43	BRANT

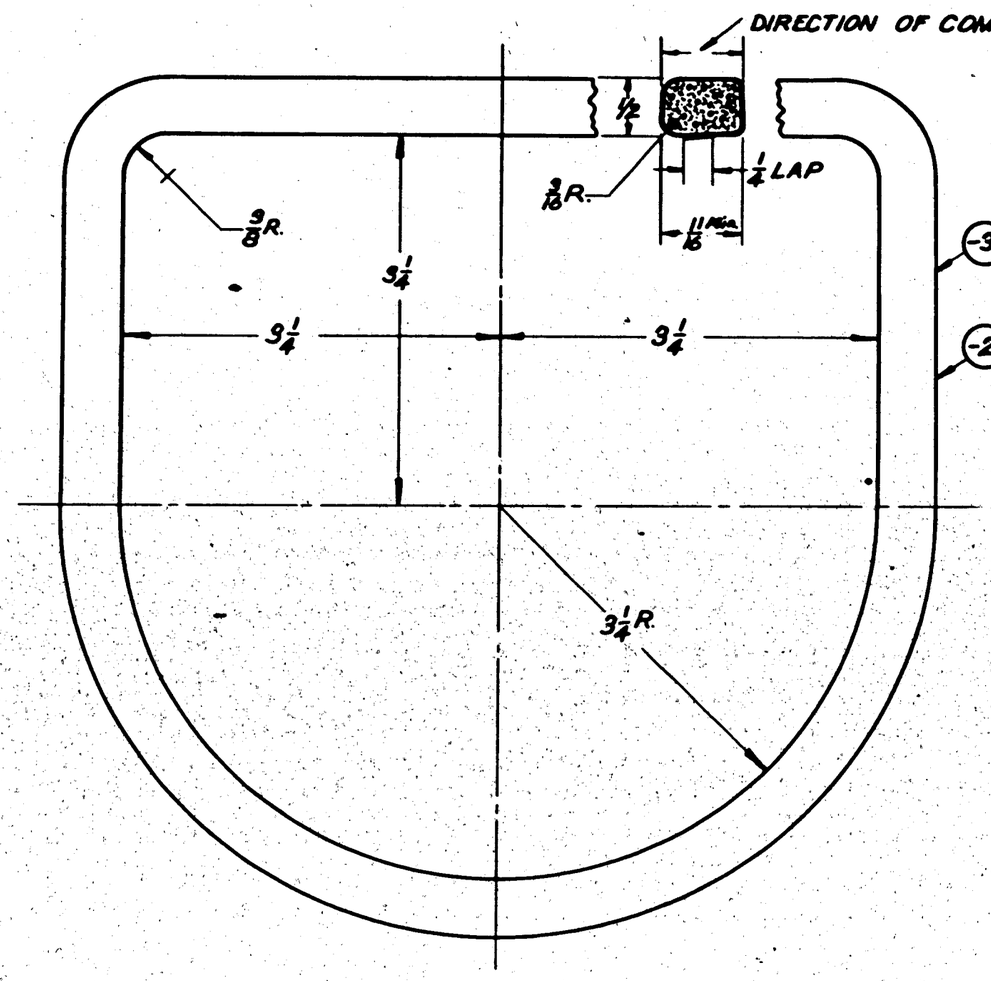

(-3) COTTON FABRIC COVERING (RUBBERIZED) COLOR: GRAY - MUST BE CURED

(-2) (TRIM OFF 2 CORNERS AS SHOWN, BEFORE COVERING) SYNTHETIC SPONGE OR EQUIV., FABRIC COVERED. MAY BE PURCHASED FROM KIRKHILL RUBBER CO., LOS ANGELES, CALIF.

O.H.	MODEL	NEXT ASSY.	REQ.	STD PARTS	LH REQ.	RH REQ.	PART NO.	LH REQ.	RH REQ.
	PBY-5B	28A1006	2						
	28-5AMN	28A1006	2						
	28-5AMC	28A1006	2						
	28-5AN	28A1006	2						
	28-5AE	28A1006	2						
	28-5AC	28A1006	2						
	28-5AA	28A1006	2						
	PBY-5(A)	28A1006	2						
	PBZY-2	28F1813-2	1						
	PBZY-2	28F1813-1	1						
	PBY-4	28A1006							
	PBY-3	28A1006							
	PBY-2	28A1006							
	PBY-1	28A1006					28F1194-3	1	
	XPBY-1	28A1006					28F1194-2	1	

REPLACES SEE NOTE

REPLACED BY

LIMIT ON DIMENSIONS UNLESS OTHERWISE SPECIFIED ± [redacted]

[redacted] 9-26-37 APPROVED DATE

CALC. WT. 16 ACT. WT.

SCALE 12" = 1'-0"

AC

NAVY NOTED MATERIAL

REQUIREMENTS PER AIRPLANE: NOTED (SPEC.) | NONE (HEAT TREAT) | NONE (FINISH)

MAT.

PARTS LIST PER ASSY.

DRAFT	CHECK	EXAM.	ENG.
9-15-36	9-25-36		
Ulrich	9-26-37	Brown	

CONSOLIDATED AIRCRAFT CORP. BUFFALO, N. Y.

STAMP PT. No. WHERE SHOWN

NAME: GASKET - FIXED EQUIP. FLARE DOOR

OPP. HAND

SIZE D

28F1194

SULLIVAN-SHEEHAN CO., INC. BUFFALO
IMPERIAL TRACING CLOTH

SUPPLIES & EQUIPMENT CLASSIFICATION			
LET	ALTERATION	DATE	BY
A	TRACED	3-26-37	V.T.B.
B	ADDED PBY-4 ASSMYS	9-1-38	[redacted]

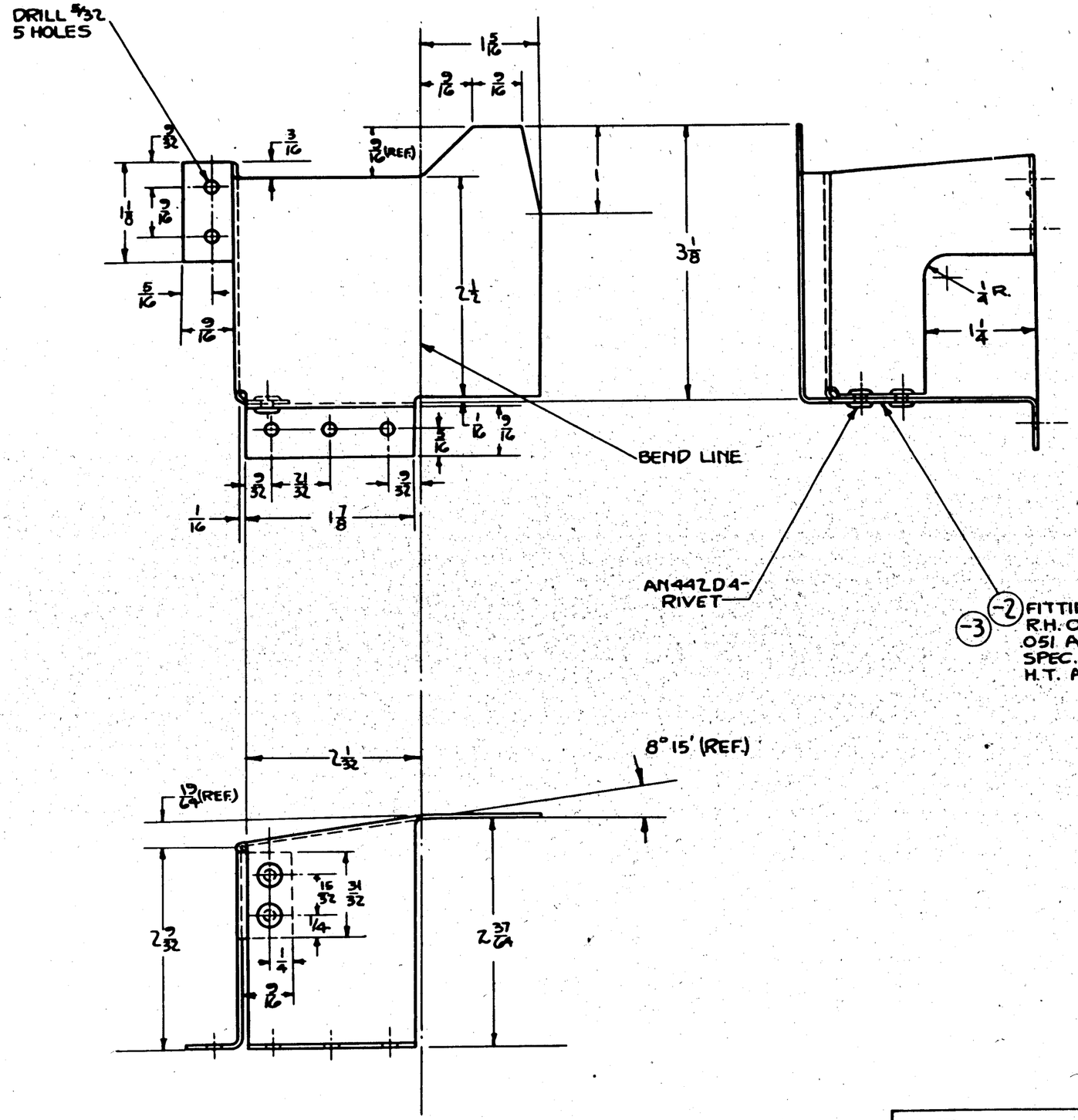

ALL BEND RADII ARE TO BE 3/32

GP-GREEN PRIME
FINISH CODE
Z [redacted]
P
AP
C

														-3		1
-R	PBY-5A	28F1238	1				AN442D4	2	2	28F1237-2	1	
-L	PBY-5A	28F1238	1								LH REQ.	RH REQ.	PART NO.	LH REQ.	RH REQ.
-1	PBY-4	28F1238-1													
	PBY-4	28F1238													
-1	PBY-3	28F1238-1													
	PBY-3	28F1238													
-1	PBY-2	28F1238-1													
	PBY-2	28F1238													
-1	PBY-1	28F1238-1													
	PBY-1	28F1238		O.H.	MODEL	NEXT ASSY.	REQ.	ST'D PARTS							

REPLACES	APPROVED [redacted] 3-26-37 DATE				
REPLACED BY	CALC. WT. 10	ACT. WT.	REQUIREMENTS PER AIRPLANE	MAT.	PARTS LIST PER ASSY.
LIMIT ON DIMENSIONS UNLESS OTHERWISE SPECIFIED ± 1/64	SCALE 12" = 1'-0"				
[redacted]	AC			GR	R KALLETT 3-27-37 MILLER
	NAVY NOTED	NOTED	NOTED.	Z-P-Z [redacted]	4-20-37 9-8-37
	MATERIAL	SPEC.	HEAT TREAT	FINISH	DRAFT CHECK EXAM. ENG.
	CONSOLIDATED AIRCRAFT CORP. BUFFALO, N.Y.	NAME FITTING-ARMAMENT-BOMB RELEASE PULLEY HOUSING			OPP. HAND 28F1237-1
	STAMP PT. No. WHERE SHOWN				SIZE D 28F1237

SUPPLIES & EQUIPMENT CLASSIFICATION			
LET	ALTERATION	DATE	BY
A	TRACED	4-5-37	[redacted]
B	REPLACED 28F1236-1 WITH 28F1236-2	1-13-39	[redacted]
	" 28F1236-1 WITH 28F1236-3		
	ADDED -2 & -3 REQUIRED FOR PBY-4		
C	REPLACED AN442D4 WITH AN515D8-9, AC365D832(7) PLACES CHGD. (11)	7-8-41	[redacted]
	AN442D4 TO (9), CHGD. AN442D5 TO AN515D8-7, AN365D832 (5) PLACES & CHGD. B.M.'S ADDED MODELS & PARTS		

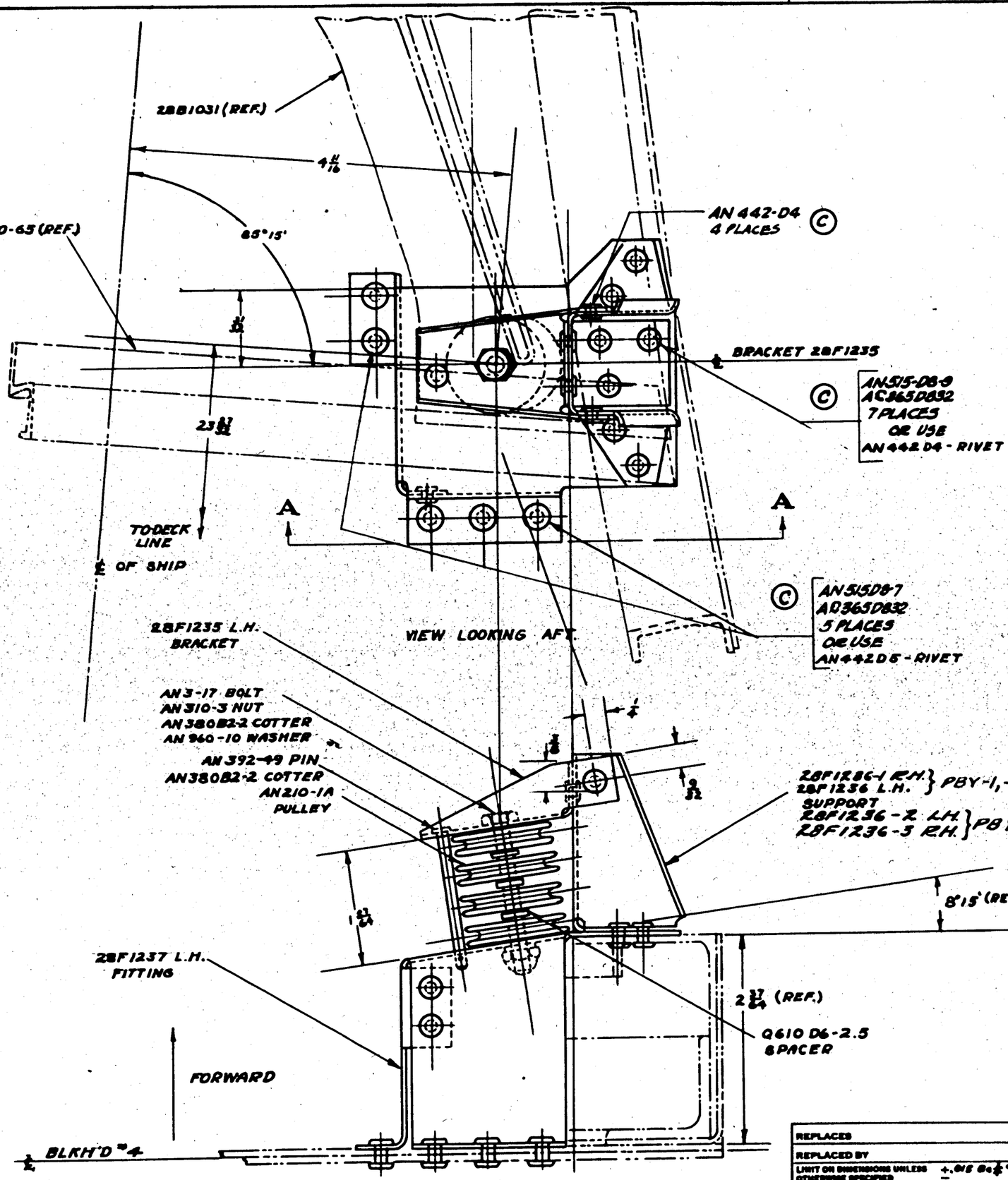

				AN515D8-7			5	5			
				AC365D832			12	12			
-5	28-3MN	28A1015	1	AN515D8-9			7	7			
-2	28-3MN	28A1013	1	AN960-10	1	1	1	1			
-3	28-3AMC	28A1015	1	AN442D5-	5	5	-	-			
-2	28-5AMC	28A1015	1	AN442D4-	11	11	4	4			
-3	28-5MC	28A1015	1	AN392-49	1	1	1	1			
-2	28-5MC	28A1015	1	AN380B2-2	2	2	2	2			
				AN310-3	1	1	1	1			
				AN210-1A	4	4	4	4			
-3	PBY-5A	28A1015	1	AN3-17	1	1	1	1			
-2	PBY-5A	28A1015	1								
-3	PBY-5	28A1015	1								
-2	PBY-5	28A1015	1	Q610D6-2.5	3	3	3	3			
-3	PBY-4	28A1016	1	28F1236-3				1			
-2	PBY-4	28A1015	1	28F1236-2			1				
-1	PBY-3	28A1015	1	28F1237-1		1		1			
	PBY-3	28A1015	1	28F1237	1		1				
-1	PBY-2	28A1015	1	28F1236-1		1					
	PBY-2	28A1015	1	28F1236	1						
-1	PBY-1	28A1015	1	28F1236-1		1		1			
	PBY-1	28A1018	1	28F1235	1		1				
					W	W	W	W	W	W	W
O.H.	MODEL	NEXT ASSY.	REQ.	PARTS	0	1	2	3			

REPLACES

REPLACED BY

LIMIT ON DIMENSIONS UNLESS OTHERWISE SPECIFIED ±.015 ON ± °

APPROVED [redacted] 4-5-37 DATE

.38 CALC. WT. ACT. WT.

SCALE 12" = 1'-0"

REQUIREMENTS PER AIRPLANE | MAT. | PARTS LIST PER ASSY.

AC

NAVY NOTED | NOTED | NOTED | NONE

MATERIAL | SPEC. | HEAT TREAT | FINISH

DRAFTING [redacted] 4-21-38 | CHECK [redacted] 4-6-37 | ENGR. | ENGR.

CONSOLIDATED AIRCRAFT CORP. BUFFALO, N. Y.

STAMP PT. No. WHERE SHOWN

NAME INSTALLATION-ARMAMENT ÷ BOMB RELEASE PULLEY HOUSING-BLKHD. #4-UPPER

OPP. HAND 28F1236-1

SIZE D | DWG. 28F1236

LET	ALTERATION	DATE	BY
H	TRACED UP TO DATE	[illegible]	[illegible]
J	CREATED -2 ASSY. ([illegible]) TO DATE. NBR. WT. CHG.	"	"
K	CREATED -5 ASSY. (DRAWING #63155B PART #8013) C.A.C. # EXT 9 WAS (DRAWING #SK-[illegible] REVISED REQ/AIRPLANE BLOCK. NO WT CHG.	J.A.R.	MOE
L	CHG'D LIMIT = 176 & ON TO = 339 & ON & = 1-175 TO = 1-333. CHG'D EXTING NO. FROM = 26711 CAC = EXT 11 TO = 92755 CAC = EXT 2-50 NO WT CHG.	2-17-42	bigH

E.O. A22949

(C.A.C. #1508) E.O. A641911A

BLKHD. #4

FORWARD

(K)

(L) PORTABLE FIRE EXTINGUISHER (SHATTERPROOF) 5 LB. CAPACITY #92155 : CAC = EXT 2-50 WALTER KIDDE CO. (FOR -5 ASSY)

(J) "LUX" PORTABLE FIRE EXTINGUISHER 5# CAPACITY - MFD. BY WALTER KIDDE CO. INC. 1400 CEDAR ST. NEW YORK (DRAWING NO #63155B PART #8813 C.A.C. #EXT. 4) (FOR -0 & -2 ASSYS.)

(K)

22F1594 (FOR -0 ASSY.)
22F1594-11 (FOR -2 ASSY.)
22F1594-20 (FOR -5 ASSY)

(K) (J)

17 31/32 (REF.)

40 15/32 TO DECK LINE

DRILL #10 (.193) 4 HOLES
AN520 D10-8
AC565D1032

6 1/2

℄ SHIP

VIEW LOOKING AFT

28B1400-88 (REF.)

A A

28B1400-83 (REF.)

28B1400-86 (REF.)

28B1400-89 (REF.)

SECTION A-A
12"=1'-0"

5/16 4 11/16 5/16

NXS13595
C.91816 #339 (ON)
CAC. CODE #158 (1)

CON. 91876 #1 TO 338 & 1000 C.777713 & 88476

CON. 70496

-5	PBY-5A	28F1002	1	(K)	5 LB. SHATTERPROOF												
-5	PBY-5	28F1002	1	(K)	FIRE EXT. PORTABLE												
-2	28-5AMW	28F6005	1	(J)	WALTER KIDDE CO												
-0	PBY-5B	28F7002	1		#92755 CAC EXT. 2-50												1
-0	PBY-5	28F1002	1														
-2	PBY-5A	28F6002	1	(K)													
-0	PBY-5A	28F6002	1														
-0	28-5ME	28F5502	1														
-0	28-5MA	28F5502	1														
-0	28-5MC	28F5502	1		AC565D1032	4	11										
-0	28-5AMC	28F6005	1		AN520D10-8	4	11										
-2	28-5MN	28F5502	1														
-2	PBY-5	28F1002	1		"										22F1594-20		1
	PBY-5	28F1002													22F1594-11	-	
	PBY-3	28F1002	1												22F1594	1	-
	PBY-2	28F1002	1														
															28F1350-3	1	1

O.M.	MODEL	NEXT ASSY.	REQ.	STD PARTS	-0	2	5	PART NO.	-0	2	5

REQUIREMENTS PER AIRPLANE | MAT. | PARTS LIST PER ASSY.

NAVY NOTED	NOTED	NOTED
MATERIAL	SPEC.	HEAT TREAT	FINISH

DRAFT	CHECK	ENGR.	ENG.
5-4-36	[illegible]	CN.	

REPLACES

REPLACED BY

LIMIT ON DIMENSIONS UNLESS OTHERWISE SPECIFIED ± [illegible]

APPROVED [illegible] 4-12-37 DATE

M.A. CALC. WT. ACT. WT.

SCALE 3"=1'-0" 1/2"=1'-0"

AC

CONSOLIDATED AIRCRAFT CORP. BUFFALO, N. Y.

STAMP PT. No. WHERE SHOWN

NAME FIRE EXTINGUISHER INSTALLATION FURNISH.-PORTABLE

OPP. SIDE

D SIZE 28F1350

SUPPLIES & EQUIPMENT CLASSIFICATION			
LET	ALTERATION	DATE	BY
C	ISSUED	4-10-[illegible]	[illegible]
D	ADDED NOTE FOR [illegible] ST. CHAIN	[illegible]	[illegible]
E.O. 20957 E	[illegible] WAS CANCD. "A"	[illegible]	[illegible]
F	CHGD. ROUND RIVETS TO SCREWS FOR ATTACHING ANGLES, -2 TO STRINGER "33 & -3 & -4 TO STR "40. ADDED TO GUN MOUNT -7 (1) ANGLES -8 & -9 & ANGLE DELETED. REVISED AN 442-04 (1)	[illegible]	[illegible]
E.O. A61946 G	ADDED CUTOUT & TOP VIEW WITH LOC. DIMS. TO -3. FIN. FOR -3 Z-P-GP WAS Z-P-2 AKV. NEG. WT. CHG.	10-20-42	MHB
E.O. A64097 H	4 3/4 WAS 4 1/4. NO WT. CHG.	10-20-42	MHB
J	NOTE "SAFETY---EQUIVALENT WAS "SAFETY CHAIN, N.A.F. 29500 -3-1." ADDED NOTE "CADIUM--USED" IN 5/16 "SAFETY CHAIN" WAS "NAF 29500-3-1" LT. CHG. NEG.	[illegible]	[illegible]
K	DELETE, FOR -6, REMOVED "3/4 x 1/16, AL. AL. EXT." ADDED MATL. NOTE "I WT. CHG. NEG.	9-10-43	[illegible]

F.W.D.

B.F. 7.75

(H) $4\frac{3}{4}$

SAFETY PLUMBERS CHAIN, SIZE #0, CORROSION RESISTANT STEEL, AMERICAN CHAIN CO, OR EQUIVALENT (B)
SCREW AN 515-6-6
P WASHER AN 960-6
L WASHER AN 833-6

(J) CADMIUM OR ZINC ELECTROPLATED STEEL MAY BE USED.

STRINGER #30

STRINGER #40

$\frac{5}{16}$

$\frac{3}{8}$

$1\frac{1}{2}$

#33 STRINGER

SCREW AN 515-6-6
NUT AC 365-632

(-2) 28F1101 (REF)

BR 6666-11 REF

(-5) DUPLEX 2" x 2 3/4" x 1/32 CEMENT TO -3 WITH VULCALOCK AFTER -3 HAS BEEN RIVETED IN PLACE (TRIM -5 TO SUIT -3)

(-6) (K) $\frac{3}{8}$" WIDE, ATTACH TO STRINGER WITH AN 515 D8-7 SCREWS AC 365 D832 NUTS. LOCATE ANGLES TO SNUG FIT FOR 28F1011 (F)

AN 515 D8-7 AC 365 D832 (F)

(-3) .064 AL ALLOY FINISH AV-GP

"VIEW" STBD SIDE LOOKING AFT

AN 515 D8-7 AC 365 D832 TO ATTACH -3 TO STRINGER #40 (F)

RIVET AC 925 D4
WASHER AN 960 D4
RIVETS MUST BE FLUSH ON TOP

STRAP Q STRS R1-12

(-4) .064 AL ALLOY FINISH AV-GP

$\frac{1}{8}$" DRILL 4 HOLES

(G)

$\frac{5}{16}$ R.

$\frac{7}{16}$

$1\frac{3}{8}$

$2\frac{3}{4}$

$1\frac{1}{8}$

$\frac{1}{4}$ PILOT HOLES 3 REQ'D

(-3) .064 AL ALLOY 24ST CLAD T FINISH AV-GP

(G)

(F) PARTS LIST -2 ASSY

AN365 D832	10	
AN515 D8-7	8	
AN515 D8-7	7	
QSTRS-R1-12	1	
28F1389-4	1	
AN960-4	3	
AC925-D4	6	
SAFETY CHAIN	1	
AC 365-632	1	
AN955-6	1	
AN960-6	1	
AN515-6-6	2	

MATERIAL NOTES-
(K) 1-MAT'L. FOR -6 MAY BE-
(A) Y-2-A28T x $\frac{3}{4}$, OR
(B) K5401 x $\frac{3}{4}$, AL. AL. EXTR., SPEC. QQ-A-354-T.

-2 ASSY

										-6	2
POY-5	28F1091	1								-5	1
POY-5A	28F1091	1	AN515-6-6	2						-3	1
POY-5	28F1091	1								28F1389-2	1
POY-4	28F1091										
POY-3	28F1091										
POY-2	28F1091										
POYY	28F1091										

REPLACES	APPROVED	DATE	O.H.	MODEL	NEXT ASSY.	REQ.	ST'D PARTS	LH REQ.	RH REQ.	PART NO.	LH REQ.	RH REQ.
REPLACED BY	CALC. WT.	ACT. WT.	REQUIREMENTS PER AIRPLANE				MAT.	PARTS LIST PER ASSY.				
LIMIT ON DIMENSIONS UNLESS OTHERWISE SPECIFIED ± 1/32	SCALE 6"=1'; 12"=1'0											
	AC NAVY	MATERIAL	NOTED	SPEC. NOTED	HEAT TREAT NOTED	FINISH NOTED	DRAFT	CHECK	EXAM.	ENG.		

ALL AL. ALLOY SHEET SPEC. 47A10 (CONDITION A) ALLOY 24S EXCEPT AS NOTED
ALL AL. ALLOY EXTRUSIONS SPEC. 4649 (CONDITION T) ALLOY 24ST EXCEPT AS NOTED
HEAT TREAT ALL CONDITION A MATERIAL PER SPEC. SR58
RIVETS AL. ALLOY EXCEPT AS NOTED

CONSOLIDATED AIRCRAFT CORP. BUFFALO, N. Y.
STAMP PT. No. WHERE SHOWN

NAME STOWAGE - FUSE TUNNEL GUN PROJECTILE BASE

OPP. HAND

D 28F1390

SUPPLIES & EQUIPMENT CLASSIFICATION			
LET	ALTERATION	DATE	BY
C	TRACED	10-28-37	[illegible]
B	ADDED TO DWG. & B.M. AN515-D8-7(4) & AC365-D832(4) WAS AN442-D4(4).	4-12-41	FINEUT SKY.
E	REVISED REQ. PER AIRPLANE BLK.	2-10-[illegible]	[illegible]

PBY-5 EQ.[illegible]
PBY-5A, OA-10
EA-[illegible]

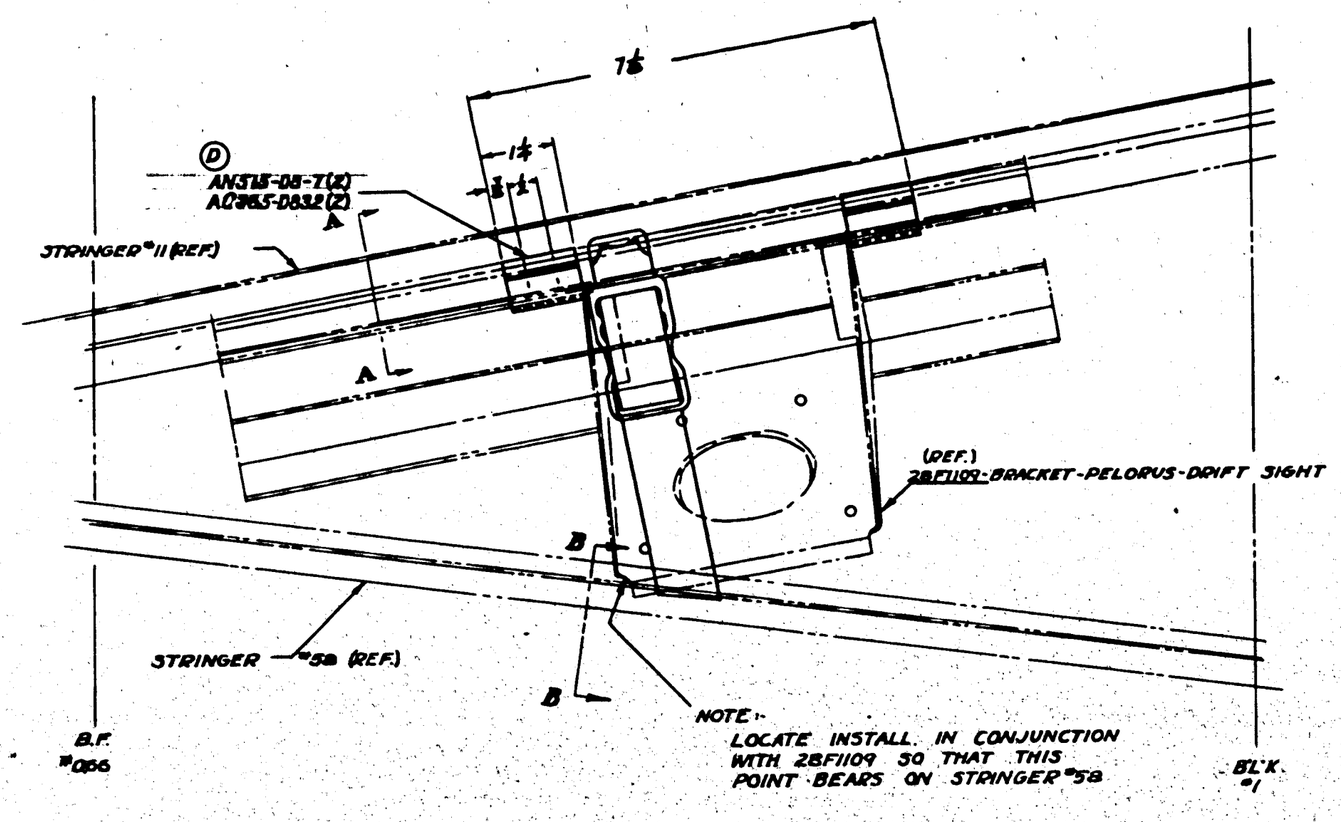

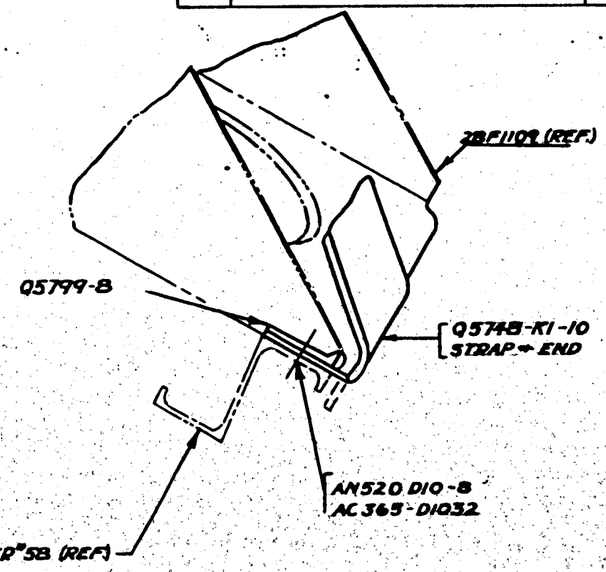

←FORWARD→

STARBOARD SIDE-LOOKING OUTBOARD

BELT FRAME "6.6 (REF.)

BULKHEAD "1 (REF.)

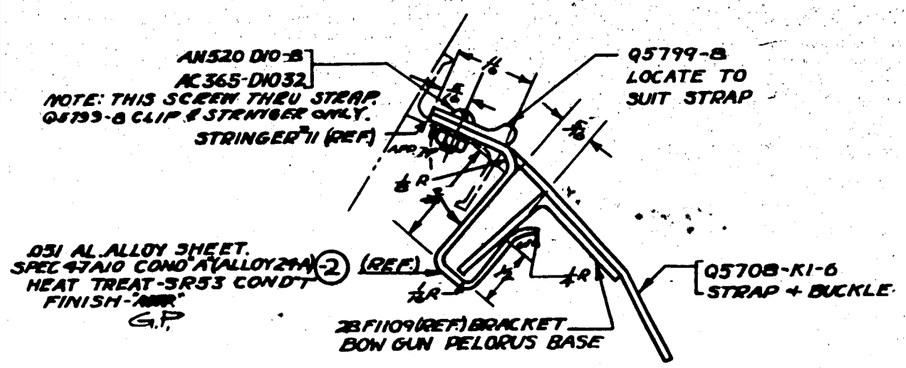

VIEW A-A
SCALE 12"=1'0"

VIEW B-B
SCALE 12"=1'0"

FINISH
G.P.- GREEN PRIME

| | | |

E.O. 35867
PBY-5, 5A 0A-10

SUPPLIES & EQUIPMENT CLASSIFICATION			
LET	ALTERATION	DATE	BY
C	TRACED UP TO DATE	6-1937	[redacted]
D	REVISED PECK PUNCH (4 PLACES)	1-1938	[redacted]
E	Q2105-2.875 WAS SM003-14	4-29-41	[redacted]

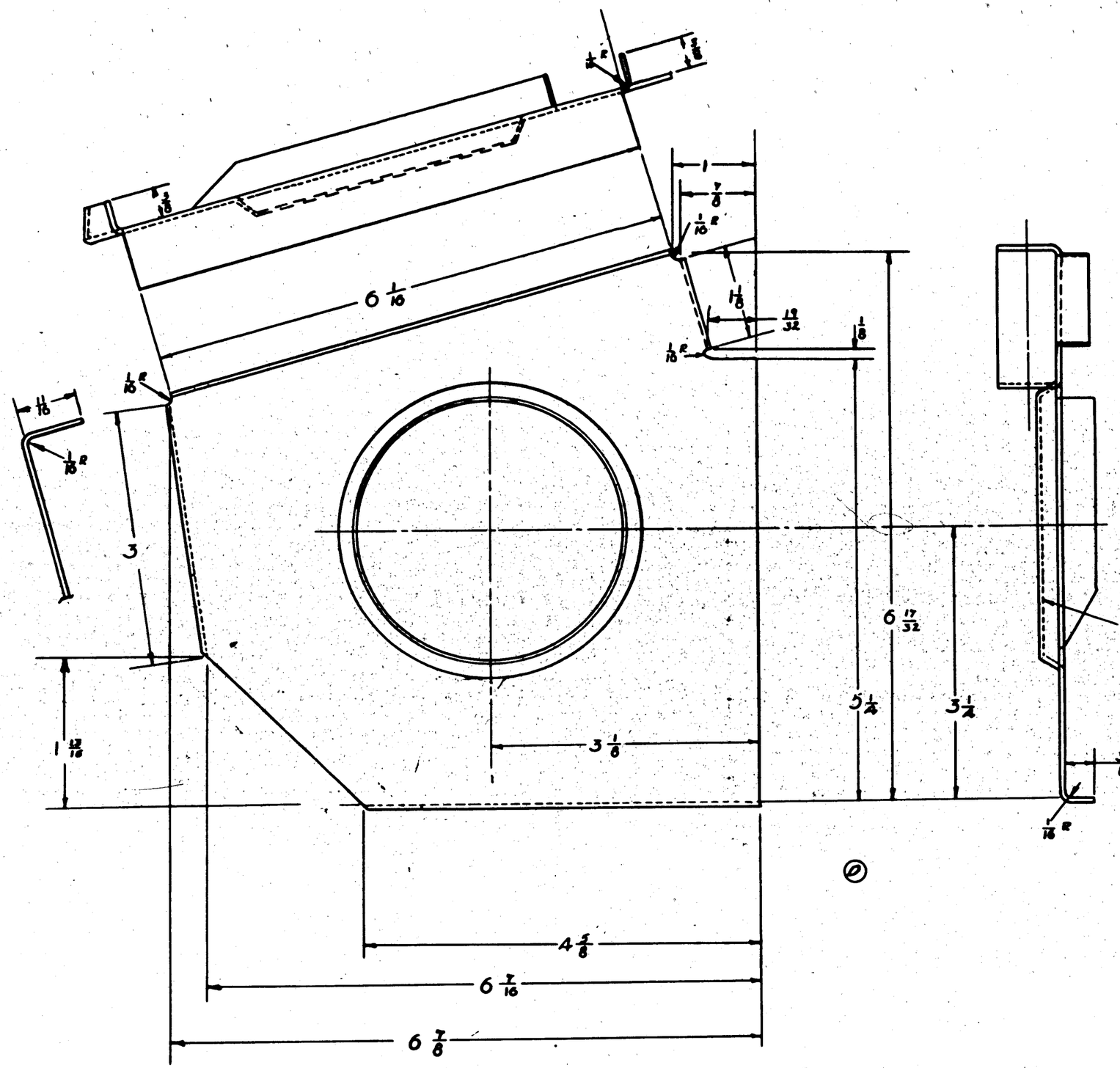

GP-GREEN PRIME
[redacted]

										LH REQ.	RH REQ.
E	-55	PBY-5A	28F1423	1							
	-55	PBY-5	28F1423	1							
		PBY-4	28F1423								
		PBY-3	28F1423								
		PBY-2	28F1423								
		PBY-1	28F1423	1							
		XPBY-1	28F1423	1							

O.H.	MODEL	NEXT ASSY.	REQ.	STD PARTS	PART NO.

REPLACES
REPLACED BY
LIMIT ON DIMENSIONS UNLESS OTHERWISE SPECIFIED ±
[redacted] APPROVED 6-1937 DATE
CALC. WT. 21 ACT. WT.
SCALE 12"=1'-0"
AC
NAVY .05 [redacted] ALLOY SH
MATERIAL

REQUIREMENTS PER AIRPLANE | MAT. | PARTS LIST PER ASSY.

4TA10 (A)	3R 53 (CONT.)	2-P-L [redacted] & P
SPEC.	HEAT TREAT	FINISH

6-1-38 [redacted]
Mock 4-7-39 [redacted]
DRAFT | CHECK | EXAM. | ENG.

CONSOLIDATED AIRCRAFT CORP. BUFFALO, N. Y.
STAMP PT. No. WHERE SHOWN

NAME
PLATE—
BOMB-SIGHT TRACK-SUPPORT

OPP. HAND
SIZE D DWG. 28F1420

SUPPLIES & EQUIPMENT CLASSIFICATION			
LET	ALTERATION	DATE	BY
C	TRACED	4-7-37	R.M.
D	INCORPORATED C.O. 6819	1-12-38	[illegible]

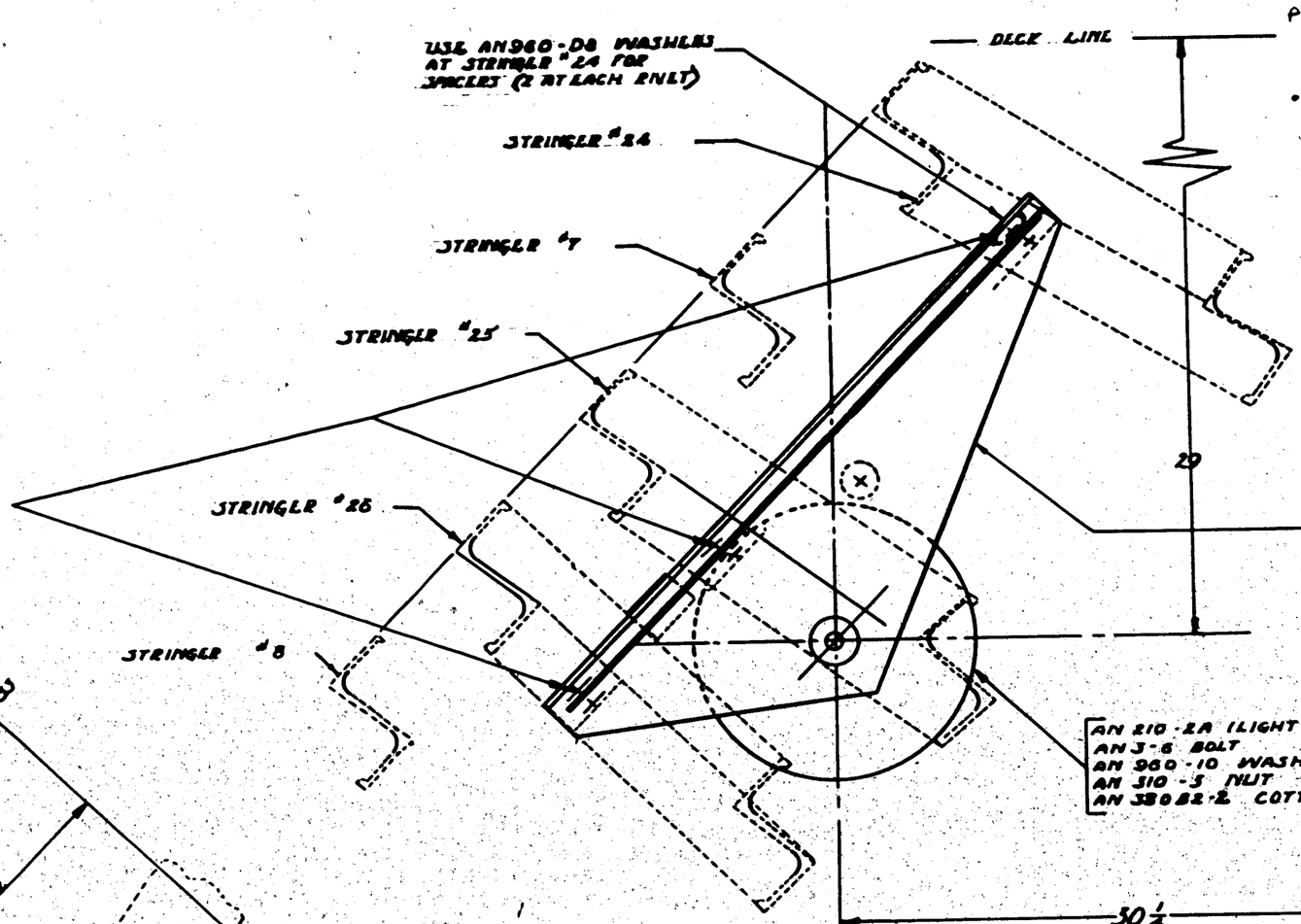

GENERAL NOTE:
INSTALL BRACKET LINEUP WITH CABLE

-R	PBY-5A	28A1015	1						
-L	PBY-5A	28A1015	1						
-1	PBY-4	28A1015		AN 3-6	1	1			
	PBY-4	28A1015		AN 210-2A	1	1	LIGHT DUTY		
-1	PBY-3	28A1015		AC365D832	6	6			
	PBY-3	28A1015		AN515D8-6	6	6			
-1	PBY-2	28A1015		AN960 D8	4	4			
	PBY-2	28A1015		AN380 32-2	1	1			
-1	PBY-1	28A1015		AN310-3	1	1	28F1427-1		1
	PBY-1	28A1015		AN960-10	1	1	28F1427		1
O.H.	MODEL	NEXT ASSY.	REQ.	ST'D PARTS	REQ. LH	REQ. RH	PART NO.	LH	RH REQ.

REPLACES	APPROVED [redacted] 4-7-37 DATE		PARTS LIST PER ASSY.
REPLACED BY	CALC.WT. 80 ACT.WT.	REQUIREMENTS PER AIRPLANE	QUANTITY 1
LIMIT ON DIMENSIONS UNLESS OTHERWISE SPECIFIED ± 1/32	SCALE 12" = 1'0"	MAT.	6-6-37 4-9-37
	AC		DRAFT CHECK ENGR. ENG.
	NAVY NOTED	NOTED — —	OPP. HAND 28F1428-1
	MATERIAL	SPEC. HEAT TREAT FINISH	

CONSOLIDATED AIRCRAFT CORP. BUFFALO, N.Y.

STAMP PT. No. WHERE SHOWN

NAME
BRACKET INST ARMAMENT
EMER BOMB REL. PULLEY

SIZE D DWG. 28F1428

SUPPLIES & EQUIPMENT CLASSIFICATION			
LET	ALTERATION	DATE	BY
D	TRACED	9-8-37	CM
E	ADDED "LIGHT DUTY" @ AN210-2A	1-19-38	CCV
F	ADDED -2 SUB Assy	1-25-38	CCV
G	REVISED REQ/AIRPLANE BLY.		
H	WT. CHG. NEG.	11-13-42	[illegible]
	REV. REQ. PER AIRPLANE BLY.		
	NO WT. CHG.	12-24-42	R055

C.O.6819 F
E.O.59306
E.O.A63530

FORWARD

STA 135

AN3-6 BOLT
AN 960-10 WASHER
AN 310-3 NUT
AN 380B2-2 COTTER

3¼ APPROX.

CABLE ℄

STRINGER #10

TO DECK LINE

43⅝

VERTICAL REF LINE

AN210-2A PULLEY LIGHT DUTY

(-2) ⅜ × ⅜ × .040 AL ALLOY SHT SPEC 4TA10 COND "T"

TO CABLE

#28F1429 BRACKET

(-3) SUB ASSEM. L.H. ONLY

(F)

STRINGER #11

(-2) REF

AN425D3 2 REQ

SECTION A-A

(-2) REF

AN442-D3 RIVET -6 REQD LOCATE TO SUIT SUPPORT ANGLES

44½ TO ℄ SHAFT

#28F1432 SUPPORT

AC385D832 NUT - 4 REQD
AN509B8-6 SCREW - 4 REQD
LOCATE TO SUIT STRINGERS

L H SIDE VIEW

PORT SIDE LOOKING FORWARD
(PULLEY NOT SHOWN)

C 88476 #134 & ON
C 91876 #91 & ON

C 70496 - 77713
& C 88476 #1T0133

C 70496 & 91876 #1090

-L	28SMC	28A1015	1								
-R	28SMC	28A1015	1								
-D	PBY5A	28A1015	2								
-D	PBY5	28A1015	2								
-R	28AMN	28A1015	1								
-L	28AMN	28A1015	1								
-A	28AMC	28A1015	1								
-L	28AMC	28A1015	1	DETAILS OF -3			28F1425	1	L		
-A	28SMN	28A1015	1				28F1432-2	1	-		
-L	28SMN	28A1015	1								
-R	PBY5A	28A1015	1								
-L	PBY5A	28A1015	1	AN210-2A	1	1					
-R	PBY5	28A1015	1								
-L	PBY5	28A1015	1	AN442-D3	6	6					
-1	PBY-4	28AN15		AC385D832	4	4					
	PBY-4	28AN15		AN515B8-6	4	4					
-1	PBY-3	28A1015					28F1432	2	2		
	PBY-3	28A1015		AN509B8-2	1	1					
-1	PBY-2	28A1015		AN960-10	1	1					
	PBY-2	28A1015		AN310-3	1	1	28F1430-3	1	-		
-1	PBY-1	28AN15		AN3-6	1	1					
	PBY-1	28AN16		AN425D3	2	-	28F1425	-	1		

SUPPLIES & EQUIPMENT CLASSIFICATION			
LET	ALTERATION	DATE	BY
A	TRACED	4-29-37	[redacted]
B	ON FACE ADDED "ALR NOTE" .051 × 7 DIA—" WAS ".051 × 6 DIA—" "TITLE OF DWG - "SOCKET-PITOT--TUBE" WAS "SOCKET ASSEMBLY---TUBE" ON FACE IMM R/H REMOVED -2() & -3(). REMOVED "WELD" NOTE "FILE SMOOTH AFTER WELDING" NOTE ".051 × 1 1/16 × 9" ALUM SHEET 25-½H SPEC. 47A2HH". DETAIL PART REPLACED-21-2 COMBINED. (NOT CHECKED)	5-7-37	[redacted]

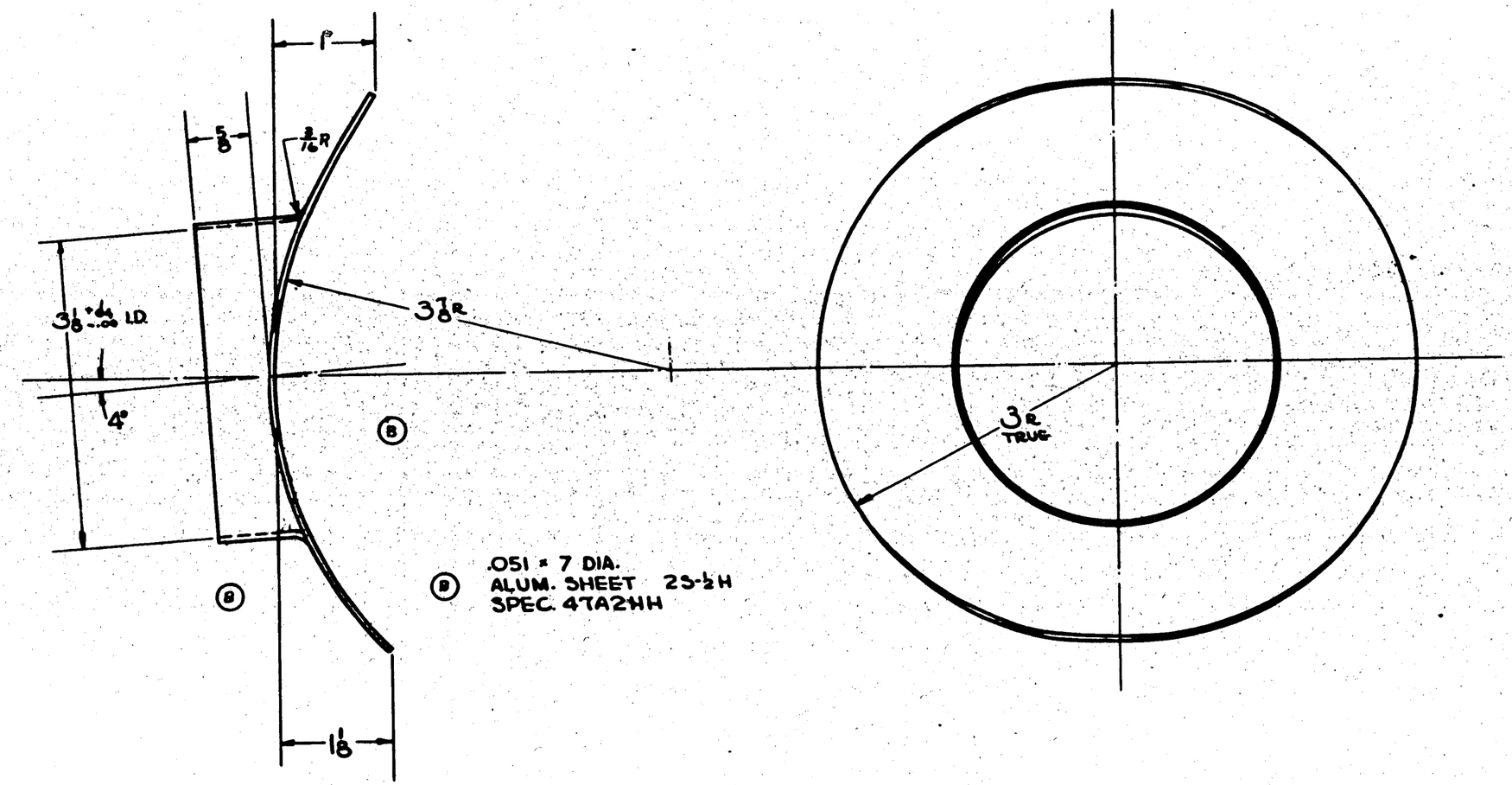

SUPPLIES & EQUIPMENT CLASSIFICATION			
LET	ALTERATION	DATE	BY
C	TRACED	4-9-37	H.W.
D	CHGD MATL TO SPEC 4710	6-23-37	GRAY
	CONDT WAS 4710 AND 0.A.		

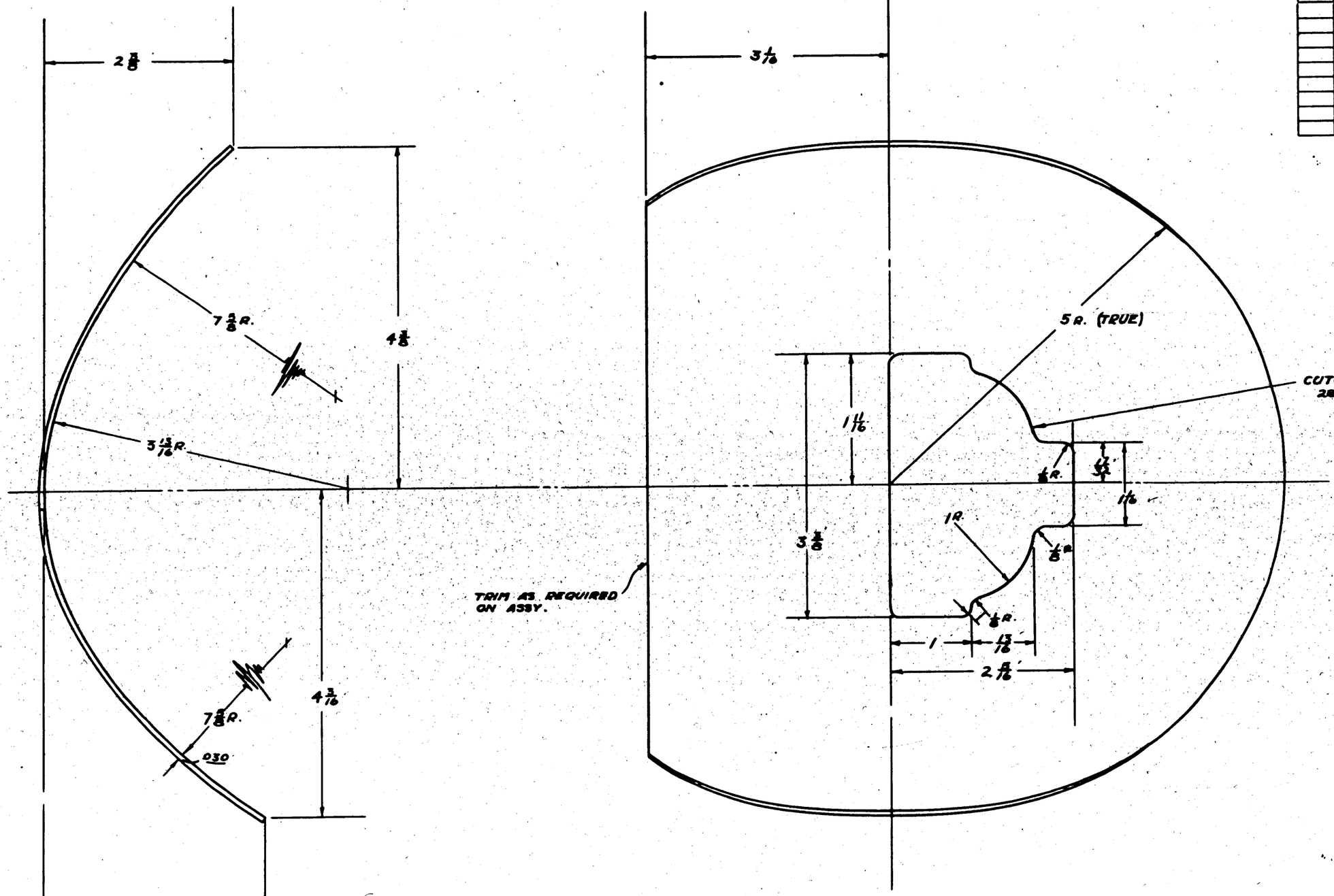

E.O. # A-18011	LET	ALTERATION	DATE	BY
	D	REDRAWN & 28F1509 RE-LOCATED, FOR PBY-5A & 28-5AMN. (ALL)	1-27-42	[illegible]
	E	CREATED – 3 ASS'Y. FOR PBY-5A, 28-5AMC & 28-5AMN	1-27-42	[illegible]
E.O. A33817	F	ADDED -4. WT. .13#	[illegible]	
E.O A31832	G	ADDED -3. WT. .12#	[illegible]	
E.O A49226	H	REL'D PBY-5A (3 E.O.N.O.N HULL # 649) -3ASS'Y; NEXT ASS'Y 28F6001 (1) REQ'D (NO WT. CH'G)	7-15-42	STONE
MCR 2218-10	J	LIMITED -3 PBY-5A FOR C/N 1001 TO MCR 2218-10. NO LIT CHG.	8-24-42	TOWER

BLK'D # 3.00

FORWARD

1½

SIGNAL FLAGS

INSTALL AT R.H. SIDE OF SHIP

DETAIL OF -0 & -58 ASS'YS.

28F1509-0 (-0 ASS'Y)
28F1509-58 (-58 ASS'Y)

STRINGER # 14 28B1000-345 (REF.)

AC515-D8-8
AC365-D832
AN960-D8

STRINGER # 15 28B1000-347 (REF.)

43⅞

℄ SHIP

28F1509-0

½

AC515-D8-8
AC365-D832
AN960-AL8

(F)

BLK'D # 0 PORT SIDE
VIEW LOOKING AFT

DETAIL OF -4 ASS'Y
SCALE 3" = 1'-0"

AC515-D8-8
AC365-D832
AN960-D8

1½

2¾

(G)

28F1509-0

28F5341 (REF)
OXYGEN BOTTLE STOWAGE

VIEW LOOKING AFT-PORT SIDE

DETAIL OF -3 ASS'Y
SCALE 3" = 1'-0"

STATION 3.33

FORWARD

SIGNAL FLAGS

3

INSTALL AT L.H. SIDE OF SHIP

(D) (E)

28F1509

28B1000-477 (REF)

To MCR 2218-10

SHIPS # 53 [illegible]

AC515-D8-8
AC365-D832
AN960-AL8

[illegible] C. 70496 TYP 13, 88 [illegible]

28B1000-479 (REF) C. 70496

28B1000-481 (REF.)

DETAIL OF -2 ASS'Y.

ASSY. DASH NO.	MODEL	NEXT ASSY.	REQ'D
-3	PBY-5A	28F6002	1
-3	PBY-5	28F1002	1
-0	PBY-5A	28F6002	1
-58	28-5MN	28F6502	1
-2	28-5AMN	28F6005	1
-2	28-5AMC	28F6006	1
-4	PBY-5B	28F7002	1
-2	PBY-5A	28F6002	1
-0	28-5MC	28F6502	1
-0	28-5ME	28F5502	1
-0	28-5MA	28F5502	1
-0	PBY-5	28F1002	1
-0	PBY-2,3,4	28F1002	1 RA

REQUIREMENTS PER AIRPLANE

REPLACES 28F1478 "B" SIZE 8-18-36 — CALC WT. .19

REPLACED BY — ACT. WT.

LIGHT ON DIMENSIONS UNLESS OTHERWISE SPECIFIED — SCALE 6" = 1'-0" EXCEPT AS NOTED

STAMP PART NUMBER WHERE SHOWN

PARTS LIST PER ASSY.	PART No	STOCK	MATERIAL	SPEC	LH REQ. -0	RH REQ. -0	LH REQ. -2	RH REQ. -2	LH REQ. 58	RH REQ. 58	LH REQ. -4	RH REQ. -4	LH REQ. -3	RH REQ. -3
	AN960-AL8				4	6	4	6			4	6	4	6
	AC515-D8-8				4	6	4	6			4	6	4	6
	AC365-D832				4	6	4	6			4	6	4	6
	AN960-D8				4	6	4							
	28F1509-58								1					
	28F1509				1	1					1	1	1	1

AC
NAVY NONE — HEAT TREAT
NONE — FINISH

NAME POCKET INSTALL'N. – FURN'S. – SIGNAL FLAGS

CONSOLIDATED AIRCRAFT CORP. SAN DIEGO, CALIF.

OPP. HAND NONE

DWG. D SIZE 28F1478

SUPPLIES & EQUIPMENT CLASSIFICATION			
LET	ALTERATION	DATE	BY
B	TRACED	2-17-38	[illegible]
C	REMOVED TUCK AT SECTION B-B	4-14-40	[illegible]
	CHG'D LOCATING DIM. FASTENER TO (WAS [illegible]) ADDED NOTE "ALL DIM. APPROX. STITCHING MAY VARY TO FACILITATE MFG."		
D	-58 + STENCIL NOTE ADDED	1-21-41	[illegible]
E	CHG'D -2 MAT'L FROM "20 OZ. WATERPROOF DUCK" TO "8 OZ. WATERPROOF DUCK"; WT CHG NIL	6-8-42	CLARK
F	CREATED -58 + STENCIL NOTE [illegible]	9-24-42	[illegible]
	[illegible]		
G	[illegible] CHANGED MATERIAL FOR -2 FROM "8 OZ. WATERPROOF" TO "8 OZ.		
	DUCK C.A.C. FAB. #6-50" WT CHG NIL	11-10-42	FOLL
H	NI BRK, ADDED "Q1601-15L (), Q1601-16 ()" Q1601		
	1951 () "Q1601-20 ()"; AT NAF 26207, NAF 210584		
	Q1601-15L, -16, -19S, & -20, ADDED "SEE NOTE"		
	ON FACE: REPLACED CALLOUT NAF 26207 FASTEN-		
	ER WITH NOTE; "Q1601-15L & Q1601-16, OR NAF-		
	26207 FASTENER;" REPLACED CALLOUT NAF-		
	210584 FASTENER WITH NOTE: "Q1601-19S &		
	Q1601-20, OR NAF 210584 FASTENER."		
	NO WT. CHG.	9-27-43	HADDOCK

20-5AN 66-37133

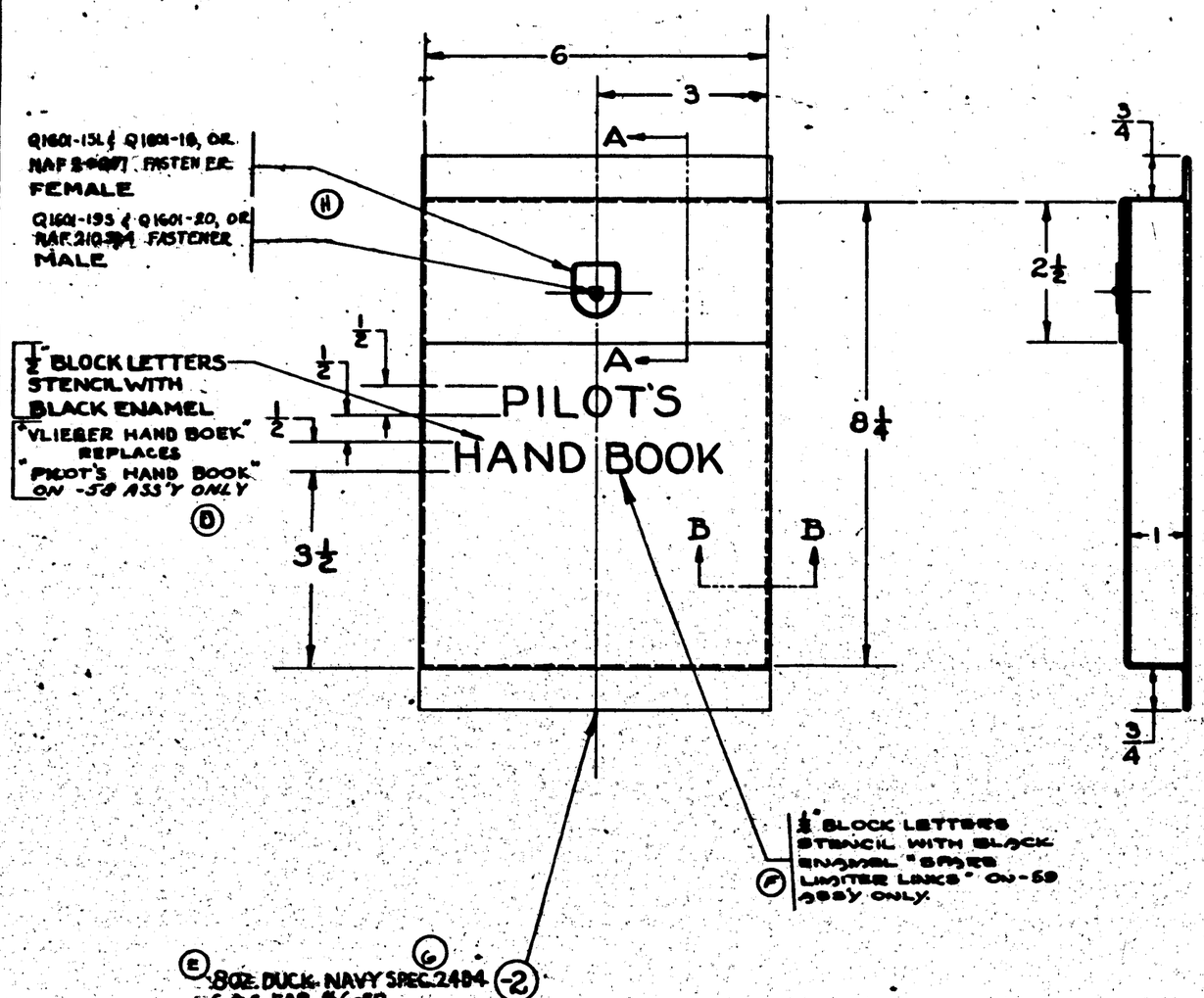

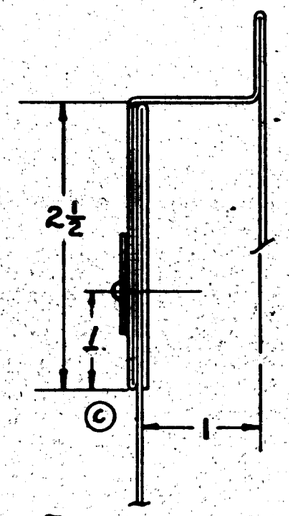

SECTION A-A
SCALE 12" = 1'-0"

NOTE: ALL SEAMS & HEMS TO BE STITCHED WITH COTTON THREAD SPEC. V.T. 276A

ALL DIMENSIONS ARE APPROX. STITCHING MAY VARY TO FACILITATE MANUFACTURE

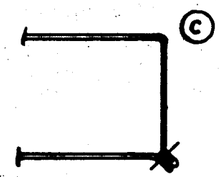

SECTION B-B
SCALE 12" = 1'-0"

-58	[illegible]	[illegible]	1																		
-58	[illegible]	[illegible]	1																		
-58	28-5MAN	28F[illegible]	1																		
-0	28-5MC	28F4152	1																		
-0	PBY-5A	28F4152	1																		
-0	PBY-5B	28F230	1																		
-0	28-5ME	28F230	1																		
-0	28-5MC	28F230	1																		
-0	28-5MA	28F230	1	Q1601-20		1															
-58	28-5MN	28F890	1	Q1601-19S		1															
-0	PBY-6	28F230	1	Q1601-16		1															
	PBY-4	28F230		Q1601-15L		1															
	PBY-3	28F230		NAF210584		1															
	PBY-2	28F109-10		NAF26207		1															
										-2		1		1		1					
G. H.	MODEL	NEXT ASSY.	REQ.	ST'D PARTS	LH	RH				PART NO.		LH REQ.	RH REQ.	LH REQ.	RH REQ.	LH REQ.	RH REQ.	LH REQ.	RH REQ.	LH REQ.	RH REQ.
REQUIREMENTS PER AIRPLANE				MAT.	PARTS LIST PER ASSY.							-0	-58	-59							

REPLACES	[illegible] APPROVED	2-17-38 DATE
REPLACED BY	20 SALE. WT.	ACT. WT.
LAID ON DRAWING WHERE [illegible]	1/16 6"=1'-0" AND [illegible]	NOTED

[redacted]

A C				8-10-36		C. N.	
NAVY NOTED	NOTED	NONE	NONE	[illegible]		MILLER	R
MATERIAL	SPEC.	HEAT TREAT	FINISH -	DRAFT	CHECK	EXAM.	ENG.

CONSOLIDATED AIRCRAFT CORP. SAN DIEGO, CALIF.

NAME POCKET - FURN. PILOT'S HANDBOOK

OPP. HAND

DWG. D 28F1508

LET	ALTERATION	DATE	BY
L	TRACED & REVISED. REPLACED STOCK MAT. & SPEC. FOR -2 WITH "Y-2-A11T X 5/8" WAS "5/16 X 5/16 X .040, AL. AL. ANGLE, 46A9 COND. T, DIE # 6240." REPLACED STOCK MAT. & SPEC. FOR -47 WITH "Y-6-A24T X 1/16" WAS 1 X 3/4 X .070, AL. AL. EXTR., (16"), SPEC. 46A9 CONDT. DIE # 7288. REPLACED STOCK MAT. & SPEC. FOR -49 WITH "Y-6-A24T X 20" WAS "K1288 X 20, AL. AL. SPEC. 46A9-T. FINISH FOR -2, -47 & -49 "Z-P-26R" WT. CHG. = .03	3-24-43	KNIGHT
M	REPLACED AN960-D10 WITH AN960-AL10. REMOVED ALL DRILL SIZE NOTATIONS FROM FACE. NO WT. CHG.	6-3-43	KNIGHT
N	CREATED -40 ASS'Y FOR PBYS C91876 #91 & ON N.A. 28U1000, & PBY-5A C.NO. (5) 464 N.A. 28U5510. -40 ASS'Y SAME AS -30 ASS'Y EXCEPT: -47 IS USED IN -30, -49 IS USED IN -40. DIM. 2 5/16 WAS 2 13/16. CHGD. LIMITATIONS ON FACE FROM SHIP LIM'S TO ASS'Y LIMS. NO. WT. CHG.	8-21-43	AHRING
P	IN VIEW LOOKING AFT AT BLKD #6, & IN VIEW A-A, A'-A' ADDED NOTE "3/4 LEG OUTSTANDING" & LENGTH OF -49, (18 1/8) WAS (20) WT. CHG. NEG	9-30-43	WELLS
Q	IN B/M FOR -2 REPLACED "Y-2-A11T x 5/8"; FOR -47 REP "Y-6-A24T x 16" & FOR -49 REP "Y-6-A24T x 18 1/8" WITH "NOTED" ON FACE ADDED MAT NOTES "1, 2, 4, 3. NO WT. CHG.	10-15-43	WELLS

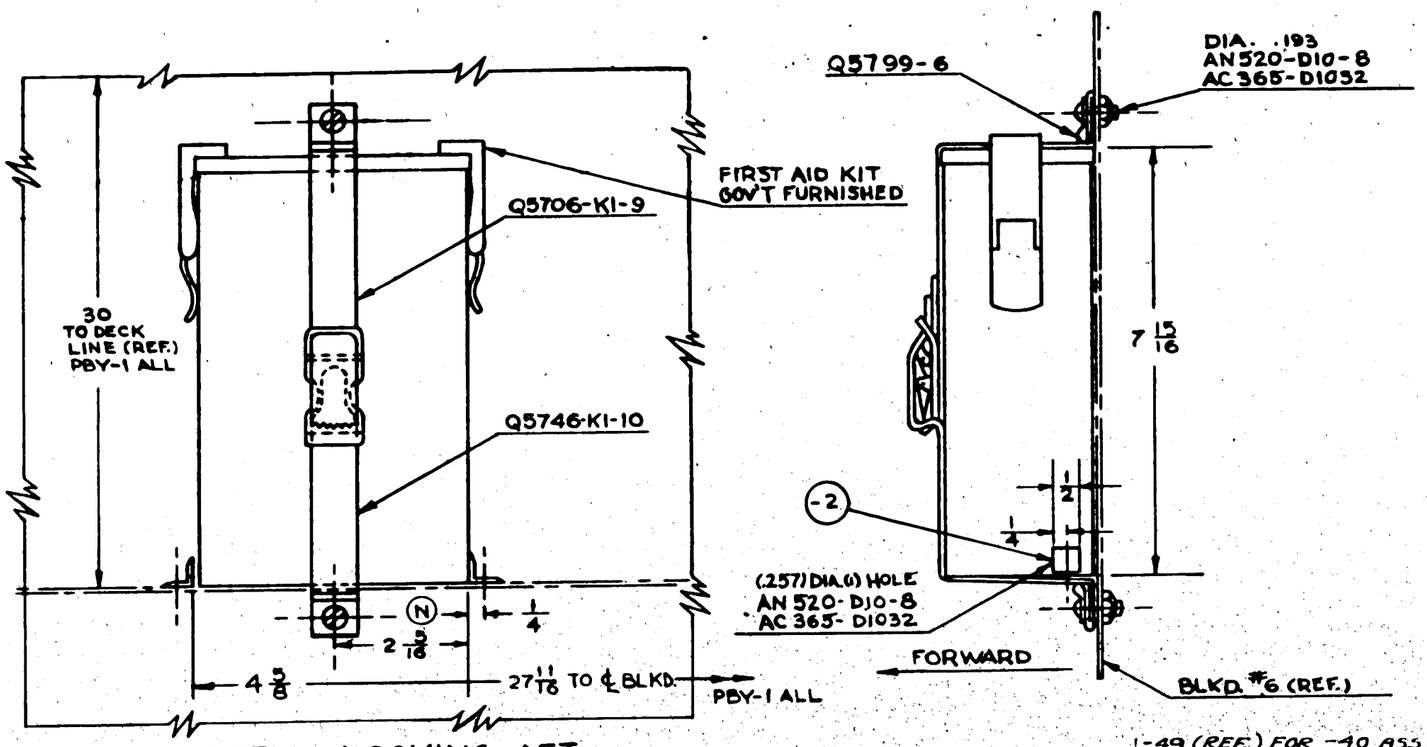

VIEW LOOKING AFT

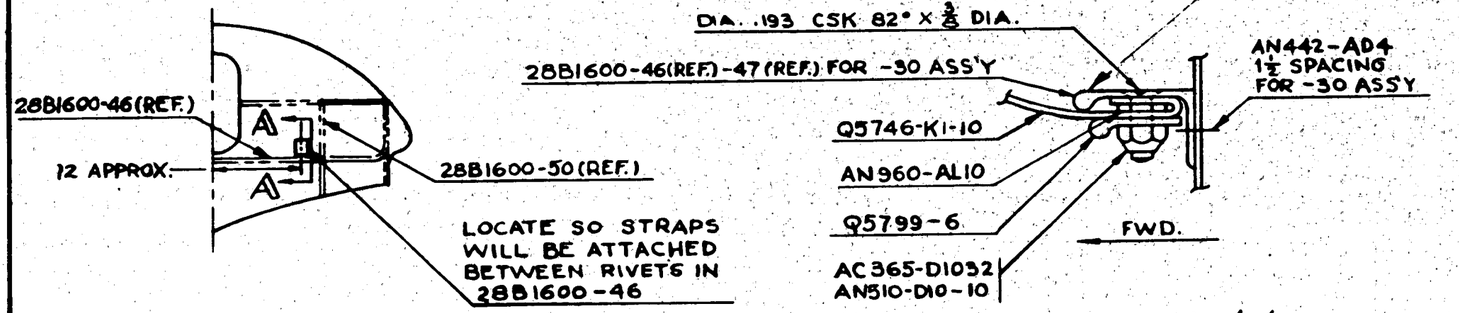

VIEW A-A & A'-A'

MATERIAL NOTES-
1.- MAT. FOR -2 MAY BE-
(A) Y-2-A11T x 5/8, OR
(B) K6240 x 5/8, AL. AL. EXTR, SPEC. QQ-A-354-T.
2.- MAT. FOR -47 MAY BE-
(A) Y-6-A24T x 16, OR
(B) K1288 x 16, AL. AL. EXTR., SPEC. QQ-A-354-T.
3.- MAT. FOR -49 MAY BE-
(A) Y-6-A24T x 18 1/8, OR
(B) K1288 x 18 1/8, AL. AL. EXTR., SPEC. QQ-A-354-T.

VIEW LOOKING AFT
-20 PBY-2 ALL, PBY-3 ALL

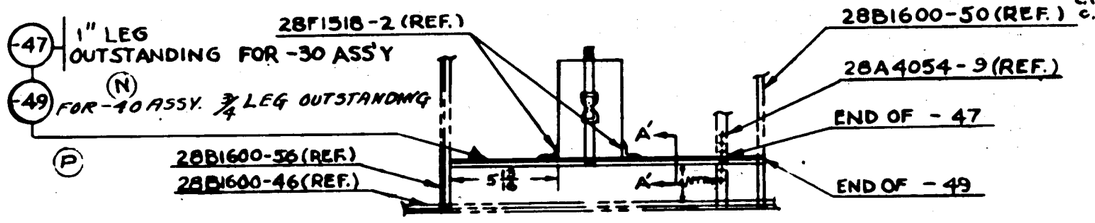

VIEW LOOKING AFT AT BLK. #6 PORT SIDE
(N) -30 & -40 ASSY'S

* G.F.E.

NO. (5) 464
C. 91876 91 & ON
C. 70496, 7777/3/88176
1-44
C. 70496 #49-167 &
C. 91876 # 1-30 &

ASSY. DASH NO.	MODEL	NEXT ASSY.	QUAN.
-40	PBY-5A	28U5510	1
-40	PBY-5	28U1000	1
-30	PBY-5A	28U5610	1
-20	PBY-5	28U1000	1
-30	PBY-5	28U1000	1
-20	PBY-4	28U1000	
-20	PBY-3	28U1000	
-20	PBY-2	28U1000	1
	PBY-1	28U1000	1

REQUIREMENTS PER AIRPLANE

REPLACES 28F279	.13	CALC. WT.
REPLACED BY		ACT. WT.
LIMIT OF DIMENSIONS UNLESS OTHERWISE SPECIFIED ± 1/32	SCALE 6" = 1'-0"	

STAMP PART NUMBER WHERE SHOWN

PART No.	STOCK	MATERIAL	SPEC.	LH REQ.	RH REQ.	LH REQ.	RH REQ.	LH REQ.	RH REQ.	LH REQ.	RH REQ.	LH REQ.	RH REQ.
#FIRST AID KIT				1		1		1		1			
AN442-AD4								✓					
AN520-D10-10						1		1		1			
AN960-AL10						1		1		1			
AN442D4				2		2		2		2			
AN520-D10-8				2		1		3		3			
AC365-D1032				2		2		4		4			
Q5746-K1-10				1		1		1		1			
Q5706-K1-9				1		1		1		1			
Q5799-6				2		2		2		2			
28F1518-49	NOTED	NOTED	NOTED					1					
28F1518-47	NOTED	NOTED	NOTED					1					
28F1518-2	NOTED	NOTED	NOTED	2		2		2		2			

PARTS LIST PER ASSY.

AC			adams	Adams	Cw			
NAVY NONE	-2, -47 & -49 - E - P - 26 P.	DRAFT	7-31-36	2-6-37	Miller			R.
HEAT TREAT	FINISH							

NAME
HOLDER-FURN-FIRST AID KIT

OPP. HAND

CONSOLIDATED AIRCRAFT CORP. SAN DIEGO, CALIF.

DWG. SIZE D

28F1518

R.

8151J82

SUPPLIES & EQUIPMENT CLASSIFICATION			
LET	ALTERATION	DATE	BY
A	TRACED	4-13-38	H.W.
B	.028 CORRUGATED SH. THOMAS MOREE SEC. 01-KT SPEC. 41A10 (ALLOY 2430) COND. "A" H.T. SPEC. 3R53 NAS SEC. "2B8813 SPEC. 41A10 (ALLOY 24A) COND. A-H.T. SPEC.		
	SR53 - SEC. A-A REDWN AND DIM. AS PER ED.	11/6/40	

EO 1935T

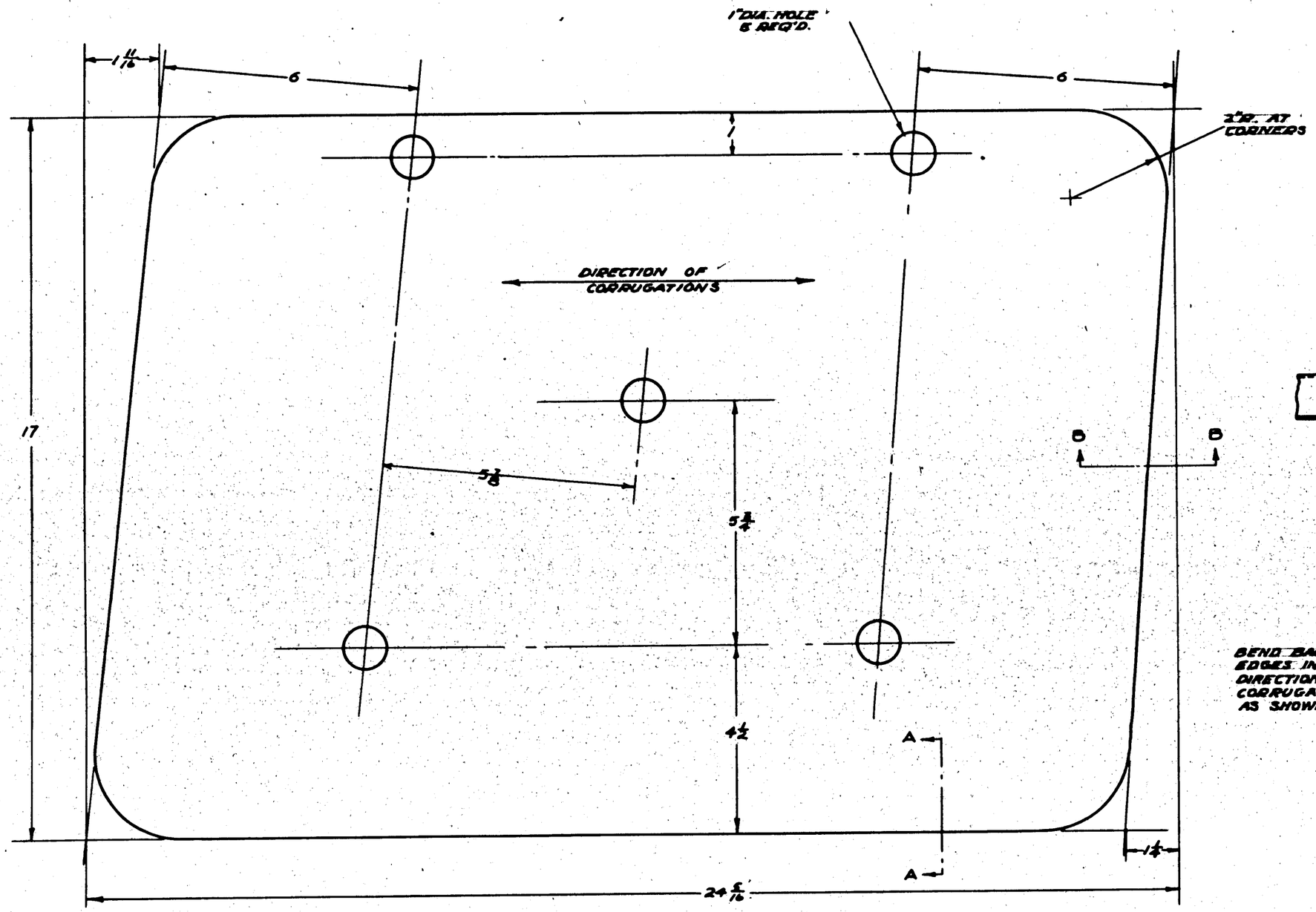

PLATE - BOTTOM VIEW
1/2 SIZE

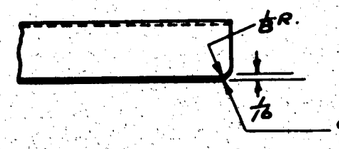

CRIMP TOP EDGES OF CORRUGATIONS AS SHOWN TO ELIMINATE SHARP CORNERS

SECTION B-B
FULL SIZE

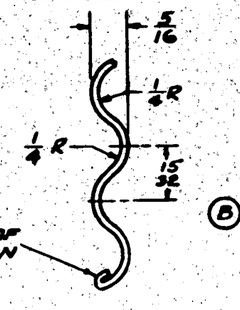

BEND BACK EDGES IN DIRECTION OF CORRUGATION AS SHOWN

MATERIAL:-
.028 CORRUGATED SHEET THOMAS MOREE SECT 01-KT SPEC. 41A10 (ALLOY 2430) COND. "A" H.T. SPEC. 3R53

SECTION A-A
FULL SIZE

GP-GREEN PRIME

	PBY-5B	28F1192	1										
	PBY-5A	28F1192	1EA										
	PBY-4	28F1192A											
	PBY-3	28F1192-16											
	PBY-2	28F1192-16											
	PBY-1	28F1192-16											

O.H.	MODEL	NEXT ASSY.	REQ.	ST'D PARTS	LH REQ.	RH REQ.	PART NO.	LH REQ.	RH REQ.

REPLACES 28F1192-16
REPLACED BY
LIMIT ON DIMENSIONS UNLESS OTHERWISE SPECIFIED ± 1/32
APPROVED 4-9-37 DATE
CALC.WT. 1.49 ACT.WT.
SCALE NOTED
AC
NAVY NOTED
MATERIAL

REQUIREMENTS PER AIRPLANE: NOTED
SPEC.: NOTED
HEAT TREAT
MAT.
FINISH: 3-P-2 GP 9-4-37 5-19-37
PARTS LIST PER ASSY.
DRAFT
CHECK
EXAM.
ENG.

CONSOLIDATED AIRCRAFT CORP. BUFFALO, N.Y.
STAMP PT. No. WHERE SHOWN

NAME
PLATE - FURNISHINGS TUNNEL GUNNERS PAD

OPP. HAND
SIZE D
28F1535

SUPPLIES & EQUIPMENT CLASSIFICATION			
LET	ALTERATION	DATE	BY
C	TRACED	9-18-39	H.W.
D	CANCELLED	9-5-39	WATTS
E	RERELEASED	9-5-39	
F	ADDED -28-8 PART .09" DIA. E.O. 13594	6/6/40	
G	FINISH FACE REMOVED PER SPEC. 46A10 COND.T. ALUM. ALLOY EXTRUSION (52ST) 1 1/2" x 1/16 x 1/16 BULB ANGLE DE "K1298. -8." ADDED TO FACE "MAT FOR -8 MAY BE: (A) Y.5-ATT x 17 5/8, OR (B) K1298 x 17 5/8 AL. ALL EXTR. 46A9-T." (NO WT CHG)	6-19-40	

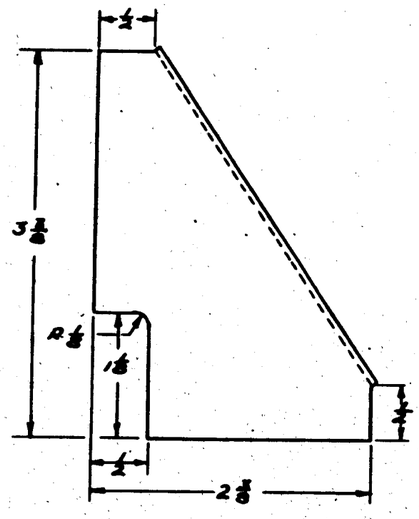

DETAIL -2
-3 OPP

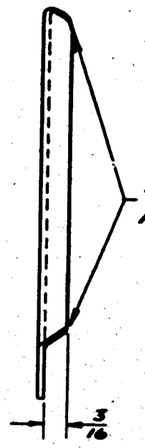

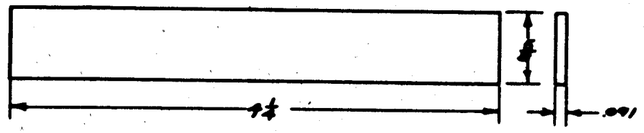

DETAIL -5

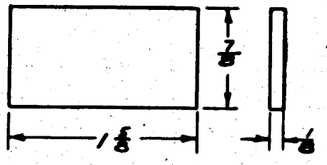

DETAIL -6

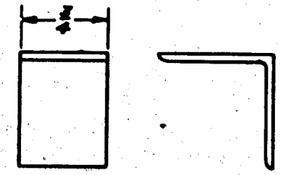

DETAIL -7

FINISH CODE	
Z	ANODIC TREATMENT
P	P-27 PRIMER
AP	ALUMINIZED PRIMER
C	CADMIUM PLATE

GP-GREEN PRIME

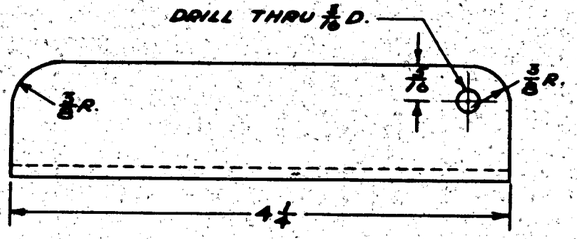

DETAIL -4

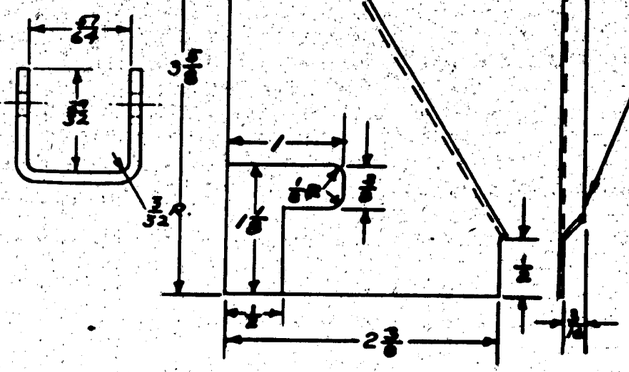

DETAIL -9
-10 OPP.

(F)

SPEC. 47A10 COND. A. ALUM. ALLOY SHEET .031(24S0)
N.T. 3R53 (COND.T.)
-28: -3, -9, -10

SPEC. 47A10 COND. A. ALUM. ALLOY SHEET .091(24S0)
N.T. 3R53 (COND.T.)
-4

SPEC. 47A10 COND.T. ALUM. ALLOY SHEET .091 (24ST)
-5

SPEC. 47A10 COND.T. ALUM. ALLOY SHEET 1/8 (24ST)
-6

SPEC. 46A9 COND.T. ALUM. ALLOY EXTRUSION (24ST)
1X1 X 1/8 ANGLE DE "K-78-J."
-7

MATERIAL FOR -8 MAY BE:
(A) Y-5-ATT x 17 5/8, OR
(B) K1298-x 17 5/8, AL. ALL. EXTR., 46A9-T.

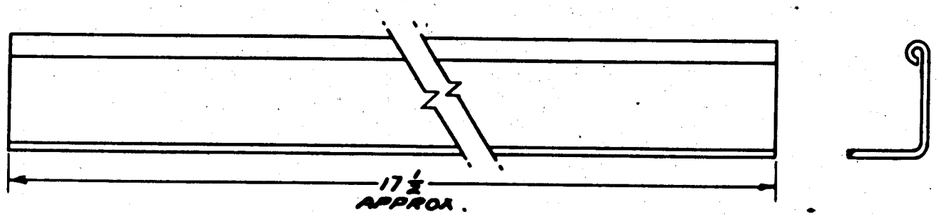

DETAIL -8

SEE RELEASES

-8 -9 -4 -5 -6 -7 -8	PBY-6	28F1070-1
-7 -9 -4 -5 -6 -7 -8	PBY-4	28F1070
-2 -3 -4 -5 -6 -7 -8	PBY-3	28F1070-1
-2 -3 -4 -5 -6 -7 -8	PBY-3	28F1070
-2 -3 -4 -5 -6 -7 -8	PBY-2	28F1070-1
-2 -3 -4 -5 -6 -7 -8	PBY-2	28F1070
-2 -3 -4 -5 -6 -7 -8	PBY-1	28F1070-1
-2 -3 -4 -5 -6 -7 -8	PBY-1	28F1070
	PBY-5A	28F1070
	RH & RHA	28F1070

REPLACES													
REPLACED BY													
LIMIT ON DIMENSIONS UNLESS OTHERWISE SPECIFIED ±													
APPROVED K.B.U. 4-12-37 DATE													
NOTED CALC.WT. ACT.WT.	O.N.	MODEL	NEXT ASSY.	REQ.	ST'D PARTS	LH REQ.	RH REQ.	PART NO.	LH REQ.	RH REQ.			
SCALE 12"=1'-0"	REQUIREMENTS PER AIRPLANE				MAT.	PARTS LIST PER ASSY.							
AC													
NAVY NOTED	NOTED	NOTED			X-P-26A	Designed 9-15-37	Drawn 9-19-37	C.M.					
MATERIAL	SPEC.	HEAT TREAT			FINISH	DRAFT	CHECK	EXAM.	ENG.				

CONSOLIDATED AIRCRAFT CORP. BUFFALO, N.Y.

STAMP PT. No. WHERE SHOWN

NAME ARM REST - FURN. DETAILS - PILOTS SEAT

OPP. HAND

D 28F1544

CURTISS-WRIGHT CORP., AIRPLANE DIV., BUFFALO
NATIONAL STANDARD CLOTH

SUPPLIES & EQUIPMENT CLASSIFICATION			
LET	ALTERATION	DATE	BY
E	TRACED	4-17-37	DAMM.
F	ADDED AN960-10 1 REQ'D	1-19-38	RRH

*5007P

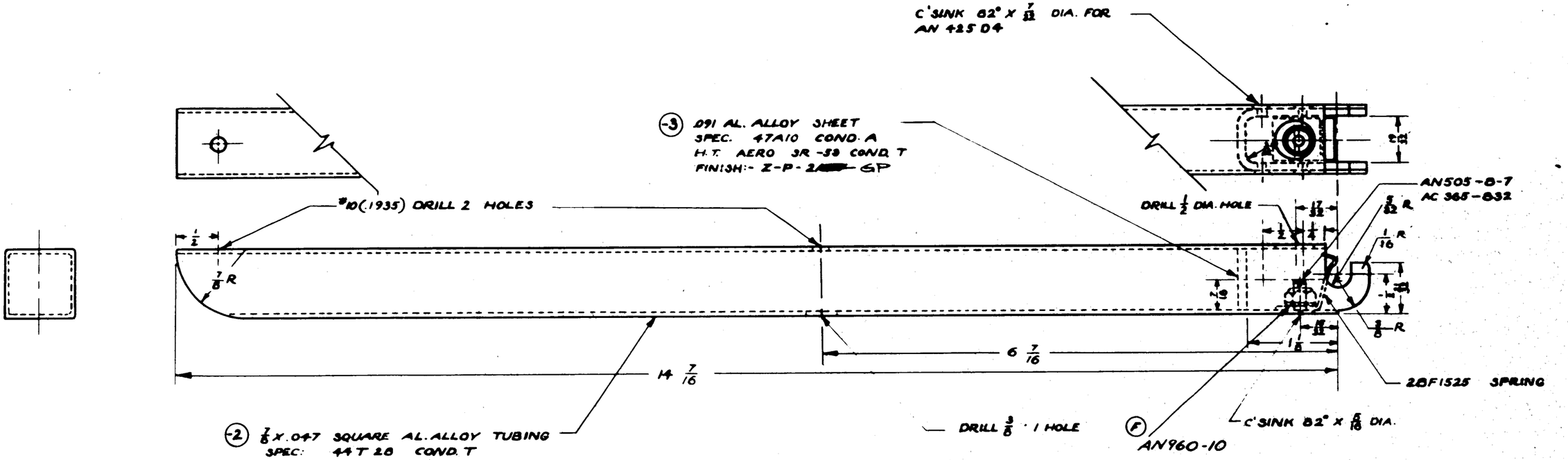

GP-GREEN PRIME FINISH CODE

Z	ANODIC T[redacted]
P	P-27 PRIMER
AP	AL[redacted]
C	[redacted]

	PBY-5A	28F1547	2				28F1525	1		
	PBY-5B	28F1547	2							
	PBY-4	28F1547	"	AC 365-832	1					
	PBY-3	28F1547	2	AN505-8-7	1					
	PBY-2	28F1547	2	AN960-10	1		-3	1		
	PBY-1	28F1547	2	AN425-04	4		28F1545-2	1		
					LH	RH	PART NO.	LH	RH	
O.N.	MODEL	NEXT ASSY.	REQ.	ST'D PARTS	REQ.			REQ.		
REQUIREMENTS PER AIRPLANE				MAT.	PARTS LIST PER ASSY.					

DESIGNED					
4-19-36	5-1-37				
DRAFT	CHECK	EXAM.	ENG.		

REPLACES

REPLACED BY

LIMIT ON DIMENSIONS UNLESS OTHERWISE SPECIFIED ± 1/32

LCW APPROVED 4-17-37 DATE

CALC. WT. 28 ACT. WT.

SCALE 12" = 1'-0"

AC

NAVY NOTED

MATERIAL

NOTED | SPEC. | NOTED | HEAT TREAT | NOTED | FINISH

CONSOLIDATED AIRCRAFT CORP. BUFFALO, N. Y.

STAMP PT. No. WHERE SHOWN

NAME

TUBE - FURN. PILOT'S ARM REST

OPP. HAND

DWG. D 51120 28F1545

SUPPLIES & EQUIPMENT CLASSIFICATION			
LET	ALTERATION	DATE	BY
B	TRACED	5-4-38	
C	CREATED - 2 ASS'Y. ADDED 2 $\frac{9}{16}$ DIM. (REF.) & NOTE "INST'N --- 28F2109-06-1". WT. CHG. NEG.	5-13-42	K

EQA23596

ANY332-13 FWY
ANY380-2-2 COTTER
ANY442-04 RIVET
℄ OF CABLE TO HANDLE
ANY210-2A LIGHT DUTY PULLEY
℄ STA. #133
4 1/4
ANY3-6 BOLT
ANY310-3 NUT
ANY380-2-2 COTTER
ANY960-10 WASHER
FORWARD FACE OF INSTRUMENT PANEL 28F1328 (REF.)
28F1014-11 L.H. (REF.)
28F2103 L.H. HOUSING
28F2103-1 R.H. OPP.
FOR -0 ASS'Y ONLY
28F2109-2 $\frac{1}{2}$ HOUSING
FOR -2 ASS'Y ONLY
28F1014-3 L.H. (REF.)
©
FWD
SIDE VIEW
2 $\frac{1}{16}$ (REF.) -0 ASS'Y
2 $\frac{1}{8}$ (REF.) -2 ASS'Y
POLLEY
VIEW LOOKING FWD

NOTE:- INSTALLATION OF 28F2109-2 L & R TO BE ½" HIGHER THAN INSTALLATION OF 28F2109-0 & -1.

℄ OF SHIP
8 $\frac{9}{16}$ (REF.)
7 $\frac{7}{8}$ (REF.)
℄ CABLE
28F1014-11 (REF.) PILOT'S INSTRUMENT PANEL INSTALLATION

O.H.	MODEL	NEXT ASSY.	REQ.	ST'D PARTS	LH REQ.	RH REQ.	PART NO.	LH REQ.	RH REQ.	LH REQ.	RH REQ.	LH REQ.	RH REQ.	LH REQ.	RH REQ.
				LIGHT DUTY			AN210-2A	1	1						
-0	PBY-5A	28A1015	1												
	PBY-5A(28A1015		1												
-2	PBY-5A	28A1015	1												
	PBY-5A	28A1015	1												
-1	PBY-4	28A1015		AN3DD-10	1	1									
	PBY-4	28A1015		AN960-10	2	2									
-1	PBY-3	28A1015		AN380-2-2	1	1	28F2109-2R		1						
	PBY-3	28A1015		AN315-3-2	2	2	28F2109-2L	1							
-1	PBY-2	28A1015		AN3-5	1	1	28A2103								
	PBY-2	28A1015		AN3-6	1	1	28F2103	1							

REQUIREMENTS PER AIRPLANE | MAT. | PARTS LIST PER ASSY.

REPLACES		APPROVED	DATE
REPLACED BY		CALC. WT.	ACT. WT.
LIGHT ON DIMENSIONS ±		12"-1"-0" SCALE	

A C			
NAVY			
MATERIAL	SPEC.	HEAT TREAT	FINISH

CONSOLIDATED AIRCRAFT CORP.
SAN DIEGO, CALIF.

NAME AN4A3A10 ARM ASS'Y-INSTRUMENT PANEL LIGHT ADJUSTING

DRAFT | CHECK | ENGR. | DES.

OFF. NUMBER 28F2109
SIZE D

SUPPLIES & EQUIPMENT CLASSIFICATION			
LET	ALTERATION	DATE	BY
E	TRACED	2-15-38	[illegible]
F	CHANGED AN23-12 TO AN23-13	3-27-40	[illegible]
G	Q7102-A10 WAS Q7102-10	11-14-40	[illegible]
H	REMOVED AN393-16 PIN, AN380B2-2 COTTER. REMOVED FROM -26-3. DRILL 1/8 THRU, 3/32 & 7/32 DIMS. REMOVED 6" DIM'S. LINE & ADDED HOLE (1) REQ'D. CHGD B.M.	7-7-41	[illegible]

PBY-5 BD 10981

DRILL #10(.194) THRU-2 ♦-3

84°

5/16, 3/16, 1/2, 11/16, 1 3/8

11°

DETAIL -3
1"×3/4"×.070 ANGLE
SEC. 1288, 245

(REF.) 28C2118-12

STA 1.33

A

5/16, 3/16

SEE DETAIL -3

CABLE (REF.)

-2 SEE DETAIL

TO ℄ HULL

FORWARD

3 3/4 (REF.)
CABLE FROM PULLEY MUST ALIGN WITH BANK MOTOR DRUM & CLEAR ROD TO GYRO.

(REF) SEE PLATFORM 28C2118

℄ BANKING MOTOR (REF.)
PLAN VIEW

DETAIL -2
1"×3/4"×.070 ANGLE
SEC. 1288. 245

5/16, 3/16, 1/4

AN210-1A PULLEY

Q7102-A10 WASHER
AN23-12 BOLT (F)
AN320-3 NUT
AN380B2-2 COTTER

A-A

AN425D4 RIVETS
Q608-D4-2 SPACER

FINISH CODE	
Z	ANODIC TREATMENT
P	P-27 PRIMER
AP	ALUMINIZED PRIMER
C	CADMIUM PLATE

GP-GREEN PRIME

O.H.	MODEL	NEXT ASSY.	REQ.	ST'D PARTS	LH RH REQ.	PART NO.	LH REQ.	RH REQ.	LH REQ.	RH REQ.	LH REQ.	RH REQ.	LH REQ.	RH REQ.
-3	PBY-5A	28F2103	1											
-3	PBY-5	28F2153	1											
-2	PBY-5A	28F2103	1	AN425D4	4	Q7102-A10	2							
-2	PBY-5	28F2153	1			Q608-D4-2	2							
-3	PBY-4	28F2150	1	AN380B2-2	1									
-2	PBY-4	28F2150	1	AN-320-3	1									
-3	PBY-3	28F2150	1	AN23-12	1	(F)								
-2	PBY-3	28F2150	1	AN210-1A	1	-3								
	PBY-2	28F2158				28F2133-2								

REQUIREMENTS PER AIRPLANE | (N) MAT. | PARTS LIST PER ASSY.

AC				
NAVY AL ALLOY 24S	46A9	SR53 COND T	Z-P-AP GP	3-20-37 G.C. 3-21-37
MATERIAL	SPEC.	HEAT TREAT	FINISH	DRAFT CHECK EXAM. ENG.

28F2133 REPLACES OF 2-24-37 — APPROVED 2-16-38 DATE

REPLACED BY — CALC. WT. J.B.J. — ACT. WT. OB

LIMIT ON DIMENSIONS UNLESS OTHERWISE STATED: 1/64 1/2° — SCALE 12"-1'-0"

CONSOLIDATED AIRCRAFT CORP. SAN DIEGO, CALIF.

NAME BRACKET INST. BANK MOTOR CABLE PULLEY

OPP. HAND

DWG. D 28F2133

SUPPLIES & EQUIPMENT CLASSIFICATION			
LET	ALTERATION	DATE	BY
B	TRACED	2-18-36	MAN.

AN210-1A PULLEY
AN23-11 BOLT
AN320-3 NUT
AN380B2-2 COTTER

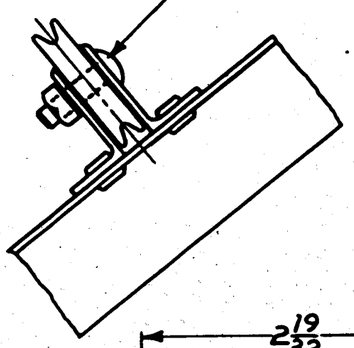

ANGLE SEE DETAIL -3 FINISH Z-P2AL

AN442-D4 RIVET (SEE NOTE)

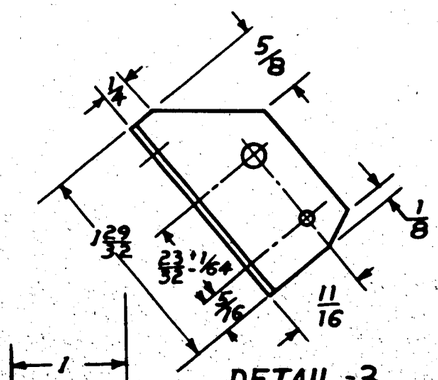

DETAIL -3

ANGLE FINISH Z-P2AL -2 SEE DETAIL

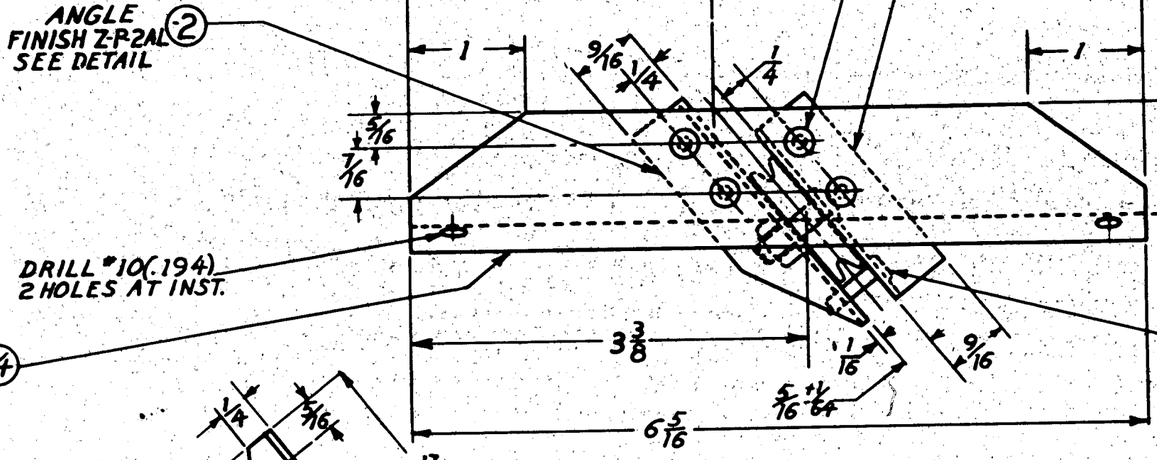

DRILL #10(.194) 2 HOLES AT INST.

ANGLE FINISH Z-P-2AL -4

AN 392-15 F.H. PIN
AN380B2-2 COTTER

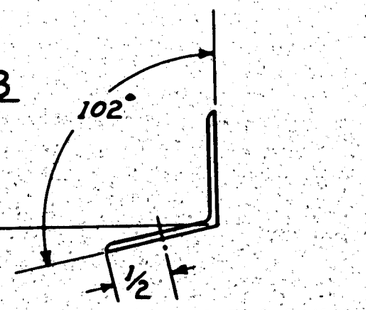

PART-4 ONLY

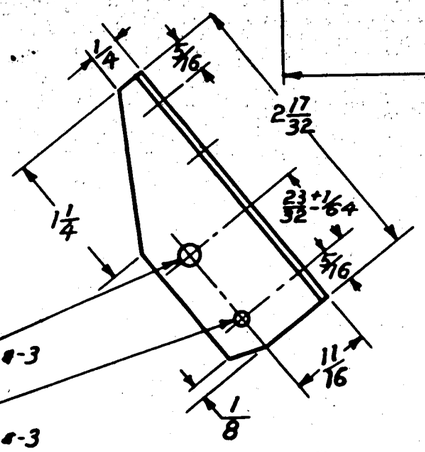

DRILL #10(.194) THRU PARTS -2 & -3 AFTER ASS'Y.

DRILL 1/8 THRU PARTS -2 & -3 AFTER ASS'Y

DETAIL -2

MATERIAL -
MAKE PARTS -2, -3 & -4 FROM ALCOA SEC. K-78-J
(1 x 1 x 1/16 ANGLE) 24 ST SPEC. 46A9 COND. T

O.H.	MODEL	NEXT ASSY.	REQ.	ST'D PARTS	LH REQ.	RH REQ.	PART NO.	LH REQ.	RH REQ.	LH REQ.	RH REQ.	LH REQ.	RH REQ.	LH REQ.	RH REQ.
				AN442-D4	4										
				AN392-15	1										
				AN380B2-2	2										
	PBY-4	28F2158		AN320-3	1		-4	1							
	PBY-3	28F2158		AN23-11	1		-3	1							
	PBY-2	28F2158		AN210-1A	1		28F2161-2	1							

REQUIREMENTS PER AIRPLANE | MAT. | PARTS LIST PER ASSY.

REPLACES	APPROVED	DATE
REPLACED BY	.79 S.H.A. CALC. WT.	ACT. WT.
LIMIT ON DIMENSIONS UNLESS OTHERWISE SPECIFIED V32	12"=1'-0" SCALE	

A C					
NAVY NOTED	NOTED	NONE	NOTED		
MATERIAL	SPEC.	HEAT TREAT	FINISH	DRAFT	CHECK	EXAM.	ENG.
				B	H.W.H	G.	
				12-18-36	1-15-37		R

CONSOLIDATED AIRCRAFT CORP. SAN DIEGO, CALIF.
STAMP PT. NO. WHERE SHOWN

NAME BRACKET ASS'Y B.S.STA. 1.0 CONTROL PULLEY

OPP. HAND

SIZE D | 28F2161

SUPPLIES & EQUIPMENT CLASSIFICATION			
LET	ALTERATION	DATE	BY
C	TRACED	2-17-38	ABAN
D	ON FACE -2, 2450 AL. ALLOY WAS 24ST AL. ALLOY. NO WT. CHG.	[illegible]	

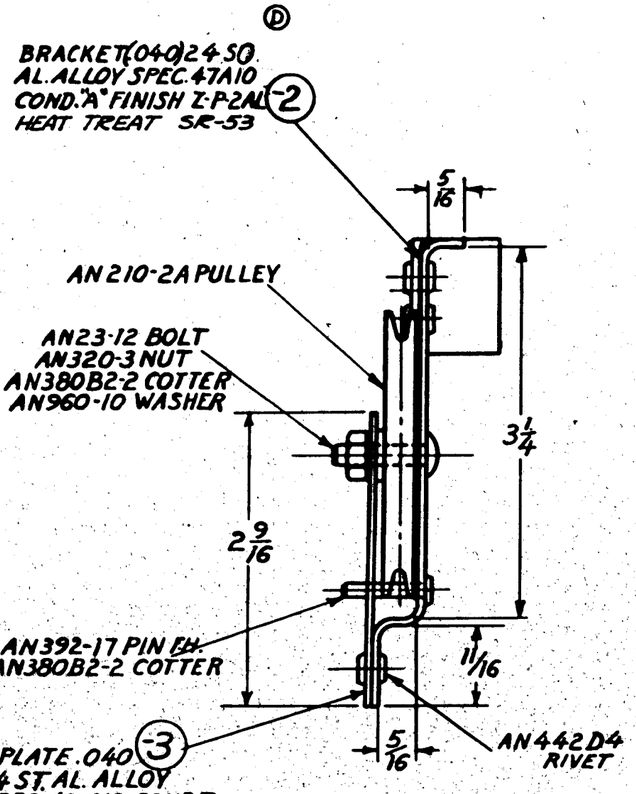

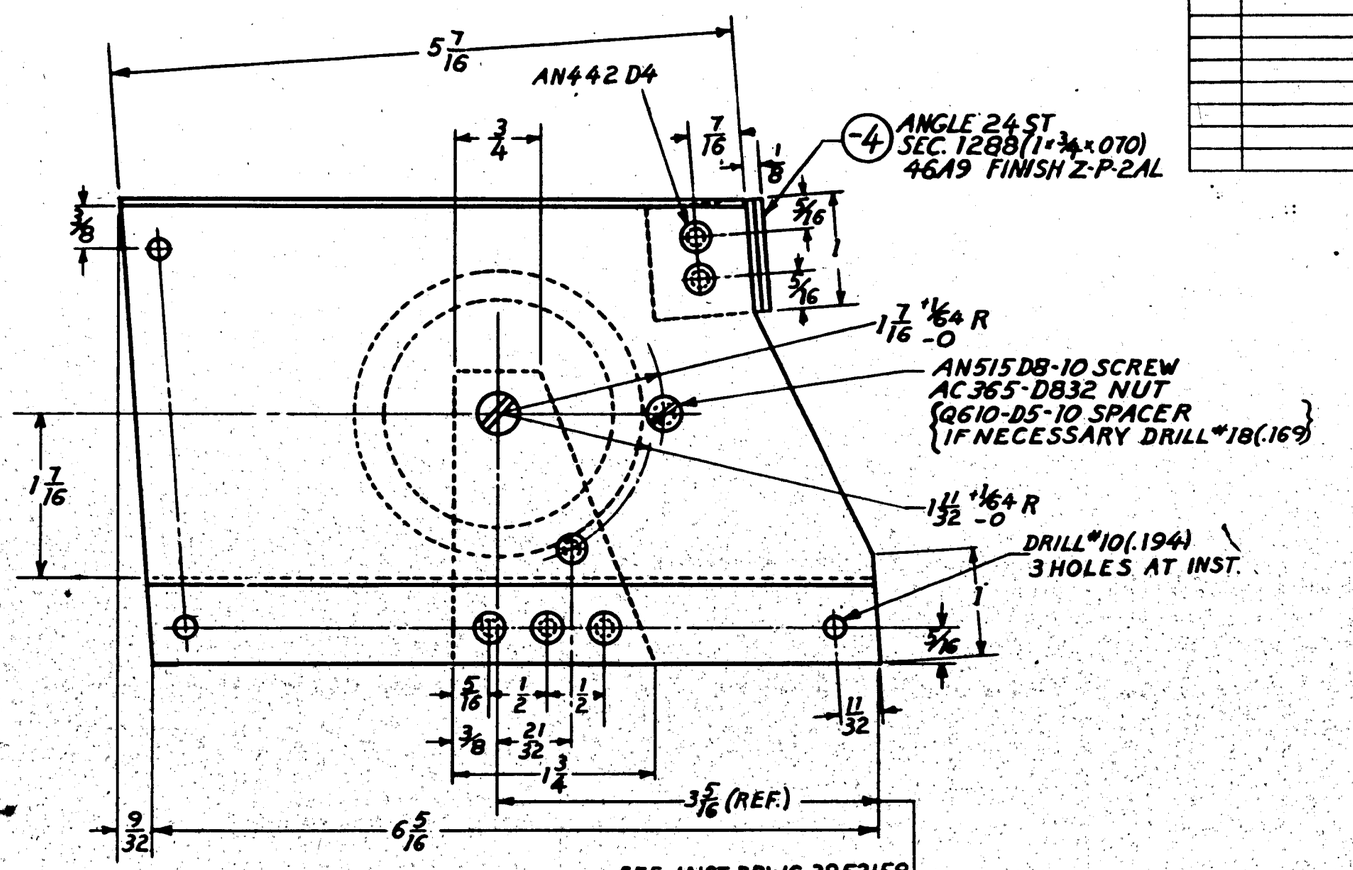

NOTE- ALL BEND RADII 1/8

QTY	PART NO.	LH REQ.	RH REQ.
1	AC365-D832		
1	AN515D8-10		
1	AN960-10		
5	AN442-D4		
1	AN392-17		
2	AN380B2-2		
1	AN320-3		
1	AN23-12		
1	AN210-2A		
1	Q610-D5-10		
1	-4		
1	-3		
1	28F2162-2		

O.H.	MODEL	NEXT ASSY.	REQ.	ST'D PARTS
	PBY-5	28F2158		
	PBY-4	28F2158		
	PBY-3	28F2158		
	PBY-2	28F2158		

REQUIREMENTS PER AIRPLANE — S MAT. — PARTS LIST PER ASSY.

REPLACES	APPROVED [illegible] 2-17-38 DATE
REPLACED BY	.22 GALC. WT. S.N.A. ACT. WT.
LIMIT ON ENGINEERING MISTAKES ± 1/32	12"=1'-0" SCALE

[redacted]

AC				
NAVY	NOTED	NOTED	NOTED	NOTED
	MATERIAL	SPEC.	HEAT TREAT	FINISH

	DRAFT	CHECK	EXAM.	ENG.
[illegible]	B	H.W.H		C
12-19-36	1-5-37			R

CONSOLIDATED AIRCRAFT CORP. SAN DIEGO, CALIF.
STAMP PT. NO. WHERE SHOWN

NAME BRACKET ASS'Y
B.S. STA. 1.33 CONTROL INB'D

OPP. HAND

DWG. D SIZE 28F2162

SUPPLIES & EQUIPMENT CLASSIFICATION			
LET	ALTERATION	DATE	BY
A	TRACED	2-18-38	AMMS

AN210-1A PULLEY
AN23-11 BOLT
AN320-3 NUT
AN380B2-2 COTTER

ANGLE FINISH Z-P-2AL (SEE DETAIL

AN442-D4 RIVET (SEE NOTE

ANGLE FIN. Z-P-2AL (-2) (SEE DETAIL)

ANGLE FIN. Z-P-2AL (-4)

AN392-15 F.H. PIN
AN380B2-2 COTTER

DRILL #10 (.194)
2 HOLES AT INST.

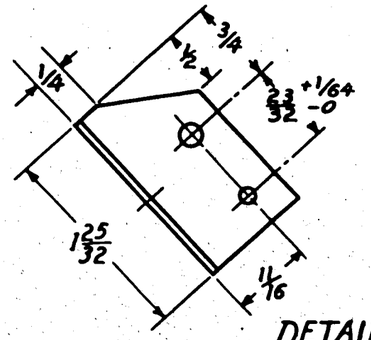

DETAIL-3

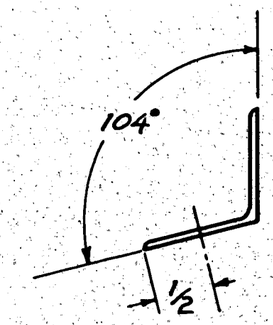

PART-4 ONLY

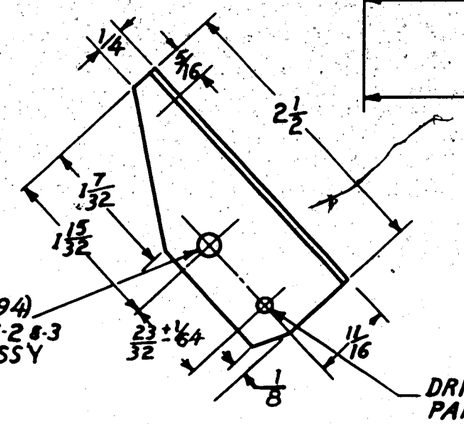

DRILL #10 (.194) THRU PARTS -2 & -3 AFTER ASSY

DRILL 1/8 THRU PARTS -2 & -3 AFTER ASSY

DETAIL-2

NOTE ~ DIMS. MARKED (REF.) ARE TO BE CHECKED ON FIRST INST. BEFORE DRILLING FOR RIVETS.

MATERIAL - MAKE PARTS -2, -3 & -4 FROM ALCOA SEC. K-78-J (1 1/2 - 1 - 1/16 ANGLE) 24 ST SPEC. 46A9 COND. T

O.H.	MODEL	NEXT ASSY.	REQ.	ST'D PARTS	LH REQ.	RH REQ.	PART NO.	LH REQ.	RH REQ.
				AN442-D4		4			
				AN392-15		1			
				AN380B2-2		2			
	PBY-4	28F2158		AN320-3		1	-4		1
	PBY-3	28F2158		AN23-11		1	-3		1
	PBY-2	28F2158		AN210-1A		1	28F2164-2	1	

REQUIREMENTS PER AIRPLANE | MAT. | PARTS LIST PER ASSY.

B | HWH. | G | R

REPLACES	APPROVED 2-18-38 DATE		
REPLACED BY	.19 GALC. WT.	S.M.A. ACT. WT.	
LIMIT ON UNDIMENSIONED RADIUS ± OTHERWISE SPECIFIED 1/32	SCALE 12"=1'-0"		

AC				
NAVY NOTED	NOTED	NONE	NOTED	
MATERIAL	SPEC.	HEAT TREAT	FINISH	

Released 12-19-38 1-15-37
DRAFT CHECK EXAM. ENG.

CONSOLIDATED AIRCRAFT CORP. SAN DIEGO, CALIF.
STAMP PT. NO. WHERE SHOWN

NAME BRACKET ASSY
B.S. STA. 0.66 CONTROL PULLEY

OPP. HAND

DWG. SIZE D

28F2164

SUPPLIES & EQUIPMENT CLASSIFICATION			
LET	ALTERATION	DATE	BY
O	TRACED	11-11-57	
P	REMOVED SPOT WELD NOTE AT -6	11-11-57	
Q	REMOVED PBY-5 REQ'S PBY-6	2-25-58	
R	ADDED -10 ASS'Y FOR 28-5MC & MF		
	ADDED -11		
S	SEAM WELD WAS SPOT WELD	2-7-61	
T	ADDED -4 & -5 ASS'Y	2-7-61	
U	ADDED -12 ASS'Y & 28F7096 INSULATOR.	11-6-61	
V	-8 MAT. "SYN. RUBBER TUBE, TYPE III, GR. A" WAS "RUBBER TUBE"		

R.A. 21465

LINE OF MAX. SECTIONAL ORDINATE

SYMMETRIC ABOUT ℄

SECTION A-A

SECTION B-B

(-7) $\frac{1}{32}$ SHEET DUPREENE 1½ X 6 LONG - TRIM TO FIT

(-8) $\frac{5}{32}$ I.D. X $\frac{5}{16}$ O.D. X $\frac{13}{16}$ LONG - SYN. RUBBER TUBE TYPE III, GR. A (V)

28F1009 INSULATOR (-0, -10 ONLY) USE 28F7096 ON -12 ASS'Y. (U)

SPREAD SEAM AT REAR ⅛ APART FOR 1½ AS SHOWN

FINISH AFTER RIVETING: EYE OUTSIDE - ZAL INSIDE

FOR 28-5MC & MF ONLY

FOR -0 ASS'Y ONLY (R)

(-6) .030 ALCLAD-2450 SPEC 47A8 COND. A H.T.-SRSS-COND.T-FINISH-Z-IP

(P)

Q4305-D4

DRILL #29 (.136) 3 HOLES AN515-D6-4 SCREWS AN340-D6 NUTS PEEN SCREW TO LOCK

DRILL #40 (.098) - 1 HOLE AN515-D6-20 SCREW AN340 D6 NUT PEEN SCREW TO LOCK

DRILL #7 (.201) 1 HOLE

Q4305-D4 RIVETS

(-2) .080 24 S0 ALCLAD SPEC. 47A8-COND.A H.T.-SRSS-CONDT FINISH Z-IP SEAMWELD -2 - ½ O.C. (S)

LIVE OF MAX. SECTIONAL ORDINATE

Q4305-D5 RIVETS

FINISH 5" HANDGRIP ONLY - ZBKE AROUND MAST

GRIP

STENCIL "GRIP" ½ WHITE LETTERS

(-4) L.H. ANGLE .040 AL ALLOY SHT. 24 S0 - FINISH ZIP

(-5) R.H. ANGLE

NOTE: HEAT TREAT ALL AL. ALLOY AFTER FORMING.

NOTE: 28F2172 REPLACES 28F1010 FOR PBY-1 SPARES

(-11) FOR -10 ASS'Y ONLY 1⅛ O.D. X .065 AL. ALLOY TUBE 17 ST SPEC. 44T21 COND T FINISH ZP-ZAL INSIDE & OUTSIDE GP (E)

(-3) 1⅛ O.D. X .065 AL. ALLOY TUBE - 17 ST GP FINISH - ZP ZAL INSIDE & OUTSIDE FOR -0 ASS'Y ONLY

O.H.	MODEL	NEXT ASSY.	REQ.	STD PARTS	REQ.	PART NO.	-0 LH	-0 RH	-10 LH	-10 RH	-12 LH	-12 RH
-10	28-5MC	28U5512	1			28T096			1		1	
-10	28-5MN	28U5504	1			28F2172-11			1		1	
-10	28-5MC	28U5504	1			28F1009	1		1		1	
-10	28-5MC	28U5512	1			28F2172-A	1		1		1	
-12	PBY-5B	28U6011	1			-7	1		1		1	
-10	28-5MC	28U5504	1	AN340-D6	4	-6	1		1		1	
-10	28-5MC	28U5504	1	AN515-D6-4	3	-5	1		1		1	
-0	COMM'L	28U2510	1	AN515-D6-20	1	-4	1		1		1	
	PBY-5	28U2004		Q4305-D5	12	-3	1		-		-	
				Q4305-D4	8	28F2172-2	1		1		1	

REQUIREMENTS PER AIRPLANE	MAT.	PARTS LIST PER ASSY.	-0	-10	-12
AC				28-57	H.W.H.
NAVY NOTED	NOTED	NOTED	NOTED	REMARKS	5-6-58
MATERIAL	SPEC.	HEAT TREAT	FINISH	DRAFT	CHECK EXAM. ENG

SEE NOTE — REPLACES — REPLACED BY — LCW 11-11-57 APPROVED DATE — CALC. WT. — ACT. WT. — .010" LIGHT ON DIMENSIONS UNLESS ± OTHERWISE SPECIFIED — 12"=1'-0" SCALE

FINISH CODE	
Z	ANODIC TREATMENT
P	P-27 PRIMER
AP	ALUMINIZED PRIMER
C	CADMIUM PLATE

GP - GREEN PRIMER

CONSOLIDATED AIRCRAFT CORP. SAN DIEGO, CALIF.

NAME: MAST FURNISHINGS GP ANTENNA

OPP. HAND

DWG. D — 28F2172

SUPPLIES & EQUIPMENT CLASSIFICATION			
LET	ALTERATION	DATE	BY
F	TRACED	2/4/38	[illegible]
G	[illegible]	[illegible]	[illegible]
H	CHANGED MATR'L FOR -2, 1⅝ O.D. X .049, 24 ST. AL. AL. TUBE SPEC. 44T28A, WAS 1⅝ O.D. X .058, 17ST. AL. AL. TUBE, SPEC. 44T21. FOR -4 & -6 24 ST. SPEC. 44T28A WAS 17 ST. SPEC. 44T21. CALC. WT. 1.686# WAS 1.880#	7-4-42	[illegible]
J	ADDED C#77713, 88476, 70496 TO REQ'TS. FOR -2, -4, -6, -PBY-5A, 28F4055-1 EA. NO WT. CHG.	6-8-43	[illegible]

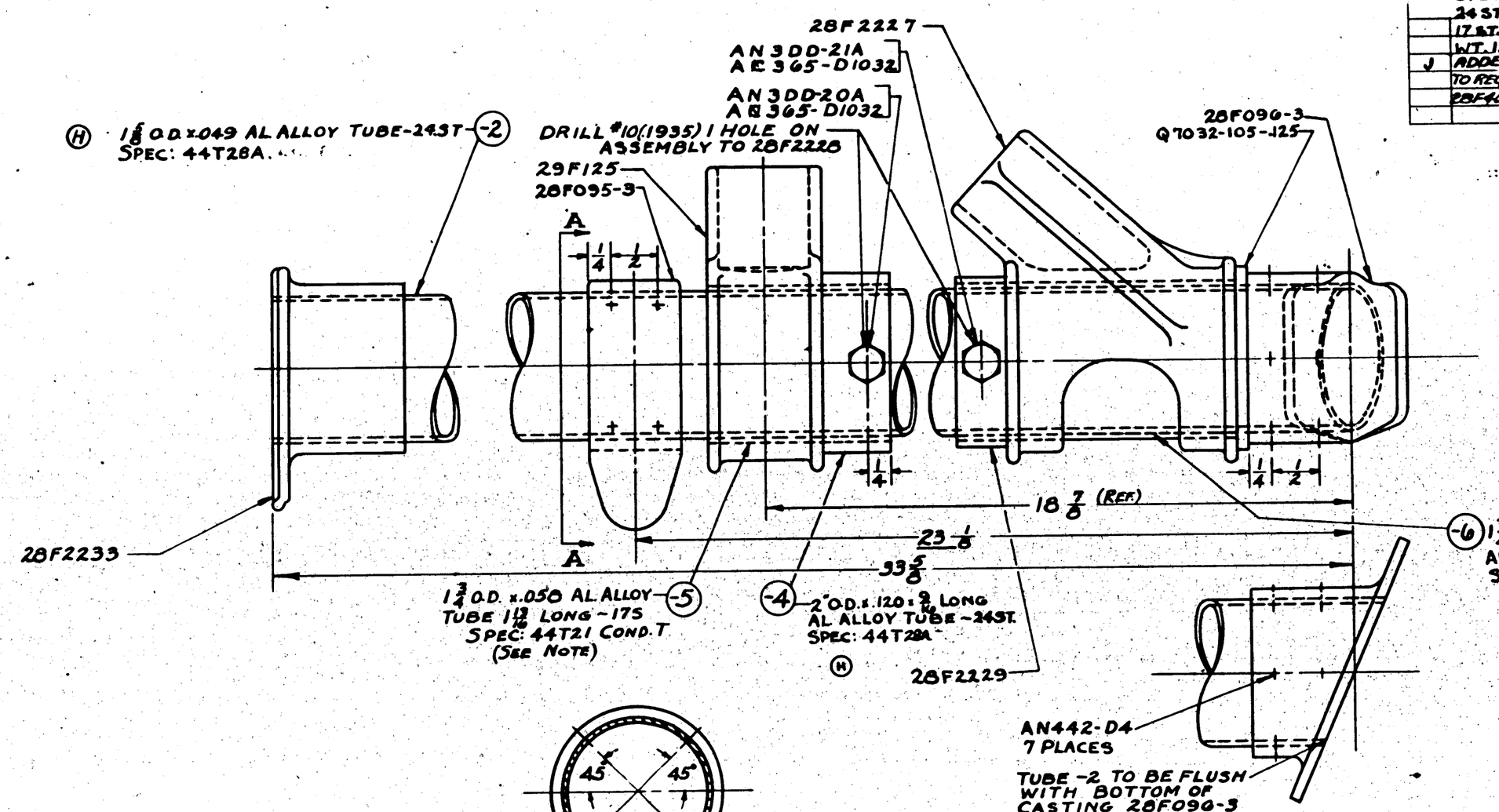

GP-GREEN PRIME
[illegible]

NOTES:
-5 & -6 MAY BE MADE FROM 1¾ O.D. x .065 & REAM OUT TO FIT OVER 1⅝ TUBE, -2.

GREASE SWIVEL JOINTS WITH PARKER "ANTI-SEIZE" COMPOUND OR EQUIV.

FINISH ON -2, -4, -5, & -6 = Z-P-26P

| | | |

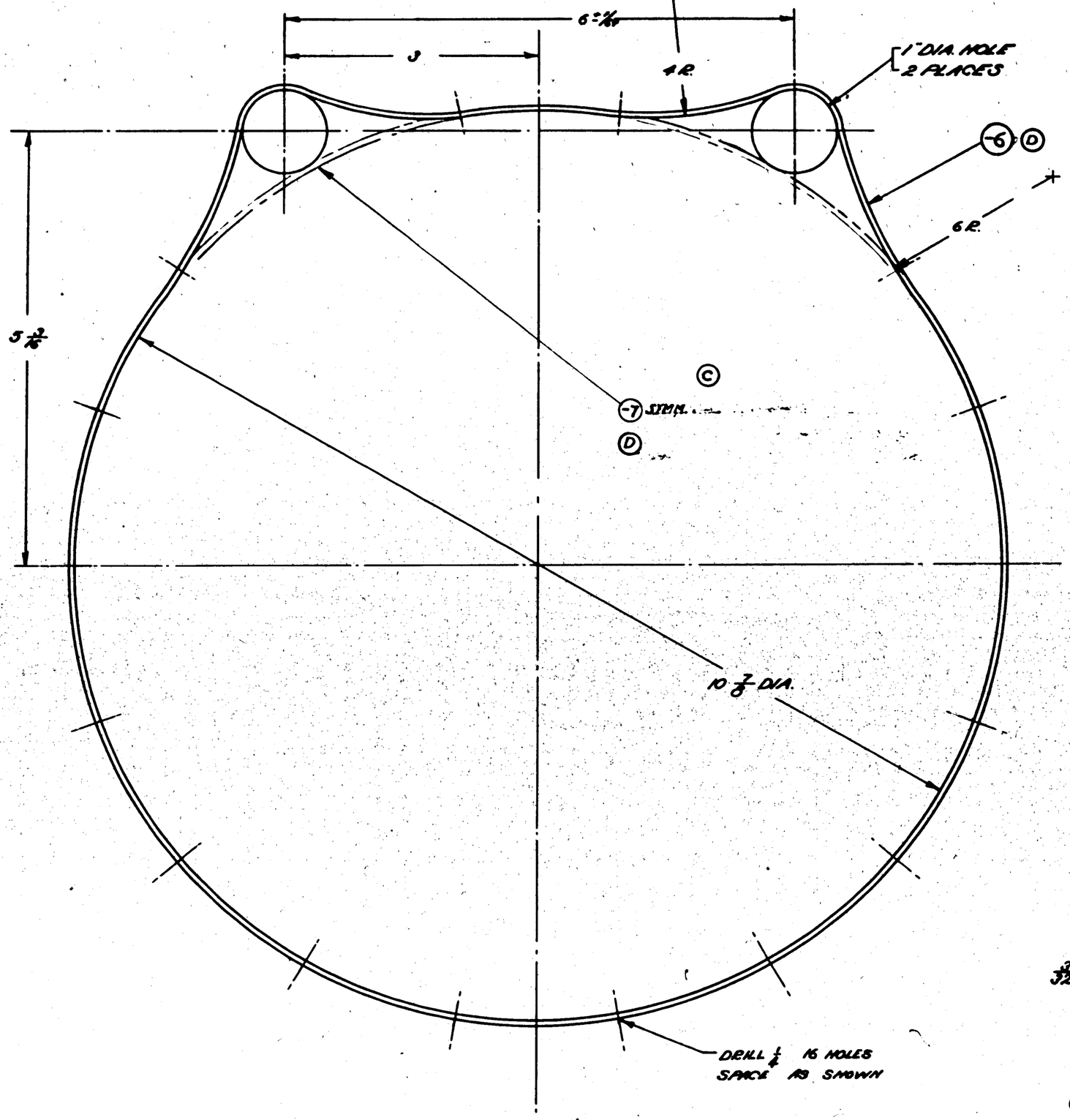

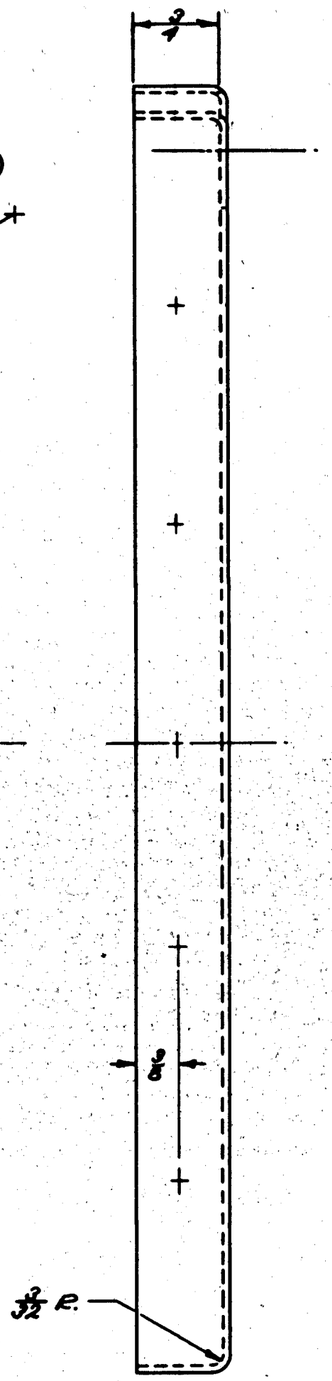

SUPPLIES & EQUIPMENT CLASSIFICATION			
LET	ALTERATION	DATE	BY
A	TRACED	3-9-38	[redacted]
B	ADDED 15 - 14 HOLES	4-25-41	[redacted]
C	ADDED -7 FOR PBZY-3 ONLY	9-15-41	[redacted]
D	REVISED NOTE FROM -7 ON DWG. 6		
	ADDED -6 FOR PBZY-2	6-4-41	[redacted]

FINISH [redacted]

Z	ANODIC TREATMENT
P	P-27 PRIMER
AP	ALUMINIZED PRIMER
C	CADMIUM PLATE

D-GREEN GRN E

E.O. 10631

E.O. 78888

EDC 5051
28-5MN

SUPPLIES & EQUIPMENT CLASSIFICATION			
LET	ALTERATION	DATE	BY
C	TRACED	8-9-38	[redacted]
D	ADDED -3	1H9-39	[redacted]
E	Added PBY-5A & 28-5AMC Brkts.	9-21-40	[redacted]
F	Added 28-5ME brkts.	10-21-40	[redacted]
G	CHANGED DIM, 1⅛ WAS 1½	12-2-40	[redacted]
H	ADDED -4 (DIM. 1¾ WAS 1⅞) & Rem.	8-16-41	[redacted]
	1⅛ WAS 1¼ FOR -4 & 1" DIA. FOR -4		
	WAS ⅞ FOR -0 & 2 HOLES		
J	IN B/M .064 WAS .040		
	5250 WAS 24S		
	WT. CHG. NEG. 8-17-43		

NIS 1. COPY

GP-GREEN PRIME

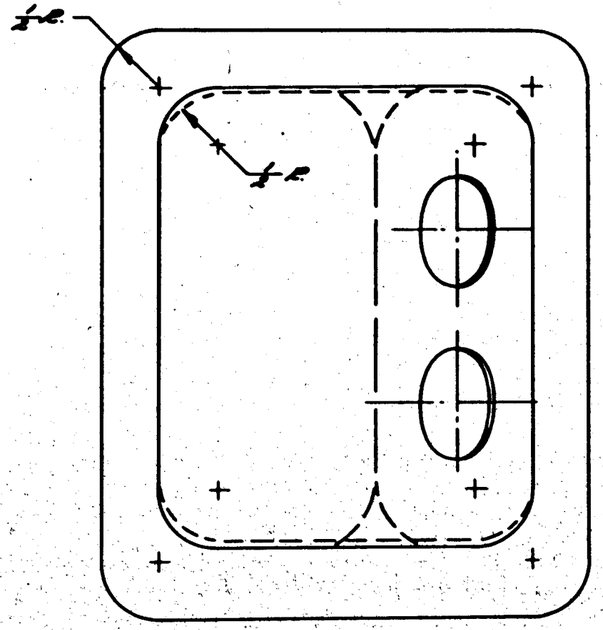

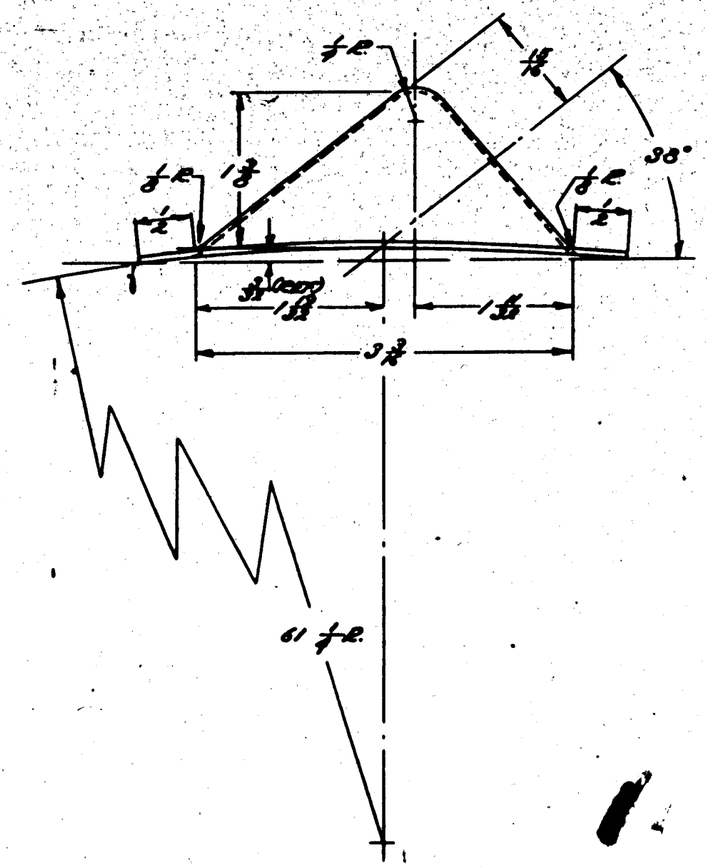

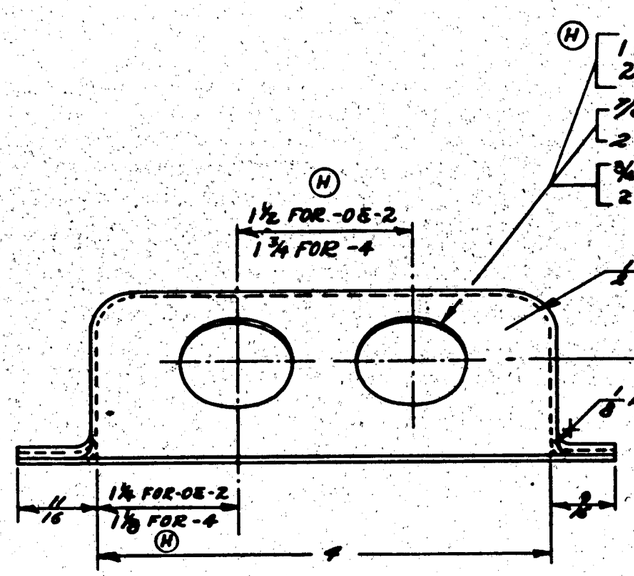

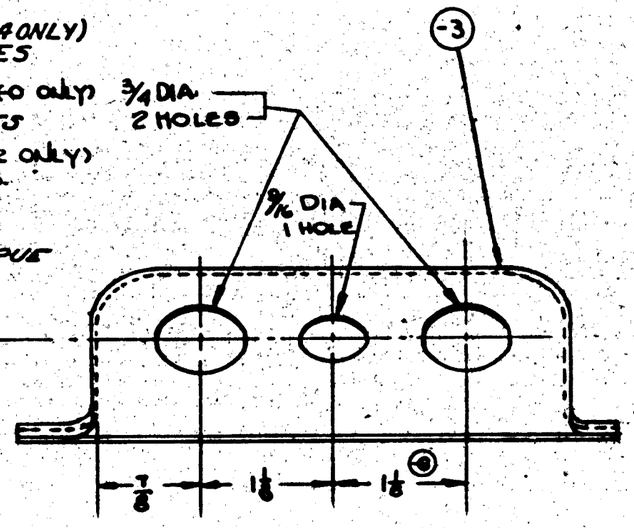

DETAIL SHOWING SIZE & LOCATION OF HOLES IN -3

(H) NOTE: -2, -3 & -4 IDENTICAL TO -0 EXCEPT FOR SIZE & LOCATION OF HOLES.

SEE RELEASES

-0	PBY-5A	28B2493	1
-2	PBY-5B	28B5019	1
-4	PBY-5B	28B2493	1

-4	28-5AM	28F3315	1
-5	OA-10	28B5625	1
-2	28-5ME	28F5043	1
-3	PBY-5A	28B5625	1
-3	28-5AMC	28B5625	1
-3	PBY-5A	28F4127	1
	PBY-0	28B2493	1
	PBY-3	28B2493	1
	PBY-2	28B2493	1

REPLACES	APPROVED [redacted]	DATE 8-9-38
REPLACED BY	CALC. WT. 09 LBS	ACT. WT.
LAYOUT ON DIMENSIONED UNLESS OTHERWISE SPECIFIED	SCALE 12" = 1'0"	

O. N.	MODEL	NEXT ASSY.	REQ.	ST'D PARTS	LH RH REQ.	PART NO.	LH RH REQ.	LH RH REQ.	LH RH REQ.	LH RH REQ.	LH RH REQ.	LH RH Req.
REQUIREMENTS PER AIRPLANE				MAT.	PARTS LIST PER ASSY.							
A C								5-5-39		CH		
NAVY 56S AL. ALLOY SHT 52S0		QQ-A-318		NONE		2-F-RB&P						R.
MATERIAL		SPEC.		HEAT TREAT		*FINISH		DRAFT	CHECK	EXAM.	ENG.	

CONSOLIDATED AIRCRAFT CORP.
SAN DIEGO, CALIF.
STOCK PT. NO. WHERE SHOWN

NAME BRKT-FUEL VACUUM LINES BLKHD FITTING

OPP. HAND

SIZE D

28F2242

SUPPLIES & EQUIPMENT CLASSIFICATION			
LET	ALTERATION	DATE	BY
A	ADDED 7/16 DIA. HOLES & DIMS.	6-14-38	CON.
B	ADDED RIVETS & DIMS. IN PDF2191 UPPER SURFACE	6-14-38	CLW.
C	ADDED NOTE		
D	CHGD DIM. 1 3/8 WAS 1.	6-21-38	[redacted]
E	FINISH 2 CL WAS 2 P-2 BAY. NO WT. CHG.	8-21-38	FJM

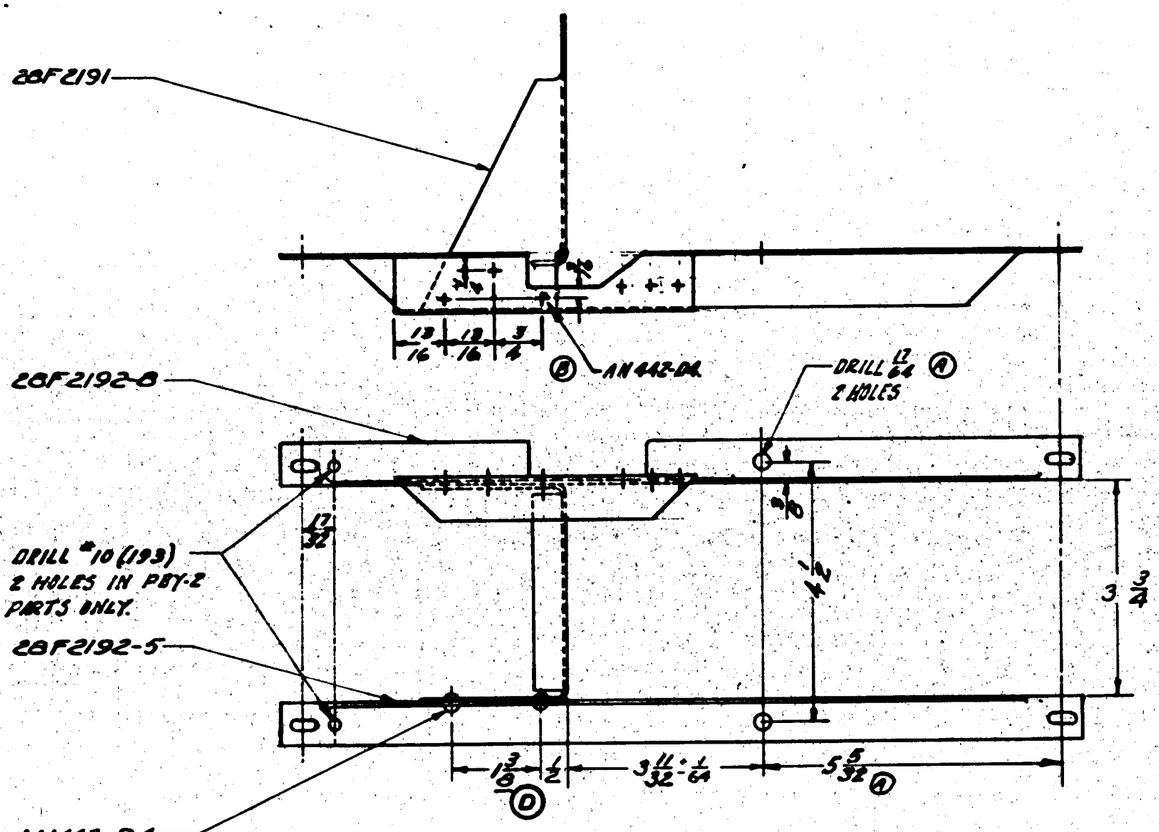

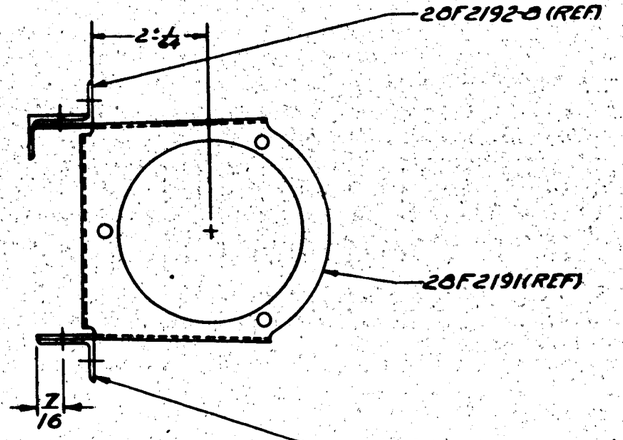

Ⓔ CL=CLEAR LACQUER

FINISH CODE	
Z	ANODIC TREATMENT
P	ZINC PRIMER
AP	[redacted]
C	[redacted]

O. H.	MODEL	NEXT ASSY.	REQ.	ST'D PARTS	LH REQ.	RH REQ.	PART NO.	LH REQ.	RH REQ.	LH REQ.	RH REQ.	LH REQ.	RH REQ.	LH REQ.	RH REQ.
	PBY-5B	28F2193	1												
	28-5 AMCE AMN	28F2193	1 EA.												
	28-5 AMCE AMN	28F2193	1 EA.	AN442-D4			28F2191	1							
	PBY-5A		1 EA.				28F2192-5	1							
	PBY-4	28F2193-C4					28F2192-B	1							
	PBY-4	28F2193-C4													
	PBY-2	28F2193													

REQUIREMENTS PER AIRPLANE — MAT. — PARTS LIST PER ASSY.

REPLACES

REPLACED BY

APPROVED CLW DATE

CALC. WT. [redacted] ACT. WT.

LIMIT ON DIMENSIONS UNLESS OTHERWISE NOTED [redacted]

SCALE 6"-1'0"

[redacted]

AC				
NAVY NOTED	NOTED	NONE	-2CL	
MATERIAL	SPEC.	HEAT TREAT	FINISH	

	DRAFT	CHECK	EXAM.	ENG.
APPROVED	4-30-38	CW		

CONSOLIDATED AIRCRAFT CORP. SAN DIEGO, CALIF.

NAME BRACKET-FURNS-DISTRIBUTING VALVE DE-ICER

OPP. HAND

SIZE D — DWG. 28F2292

SUPPLIES & EQUIPMENT CLASSIFICATION			
LET	ALTERATION	DATE	BY
A	TRACED	2/5/38	[illegible]
B	CHG MAT'L FOR -2 FROM ST TO SO. NO WT. CHG.	5-19-42	[illegible]

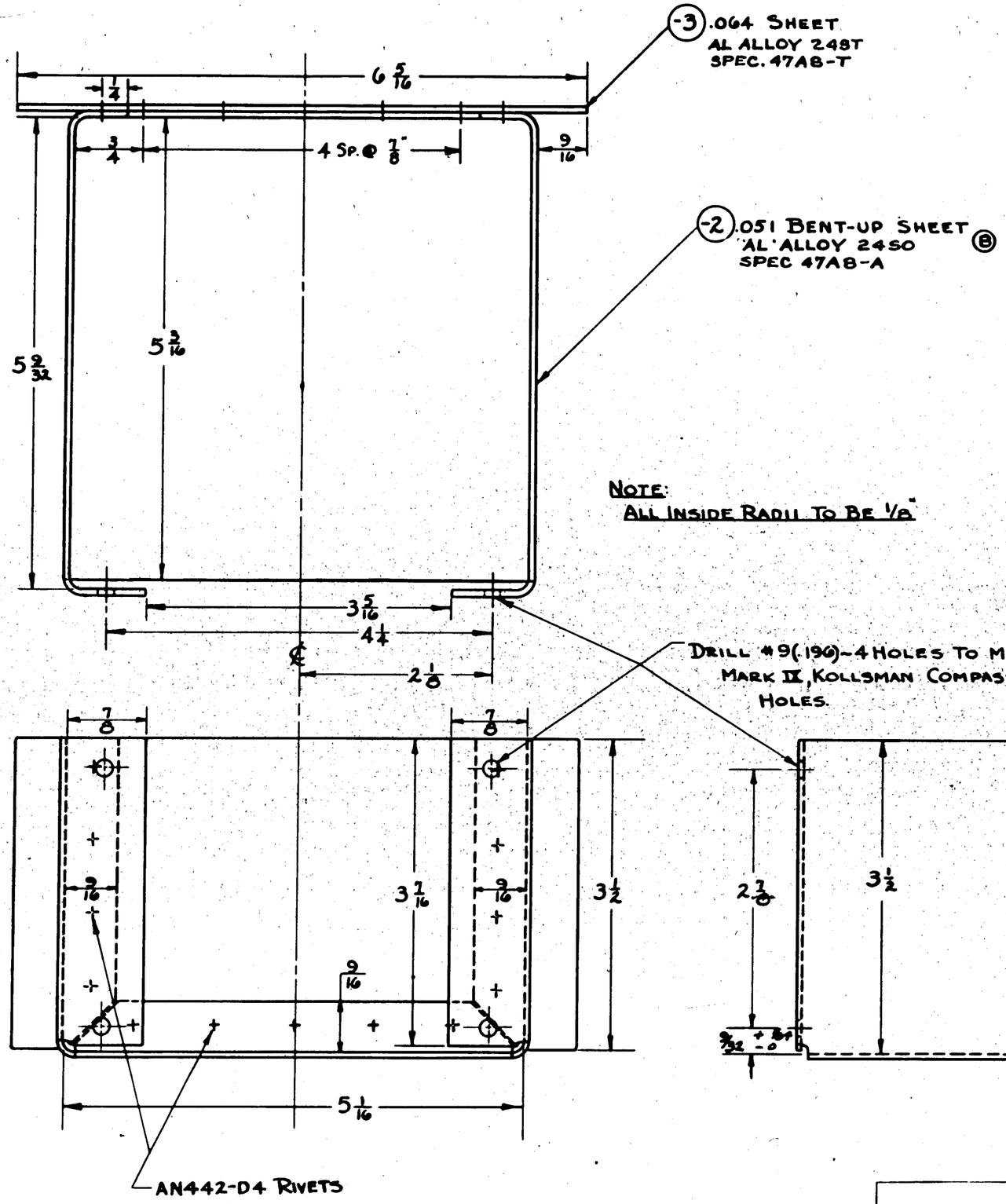

NOTE:
ALL INSIDE RADII TO BE 1/8"

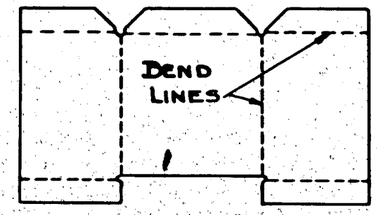

FLAT PATTERN SKETCH OF -2

GP-GREEN PRIME
PART'S CODE
[redacted]

	PBY-5A	28F2535																			
	PBY-5	28F2535																			
	PBY-4	28F2535																			
	PBY-3	28F2535													-3	1					
	PBY-2	28F2535			AN442-D4										-2	1					
O. H.	MODEL	NEXT ASSY.	REQ.	ST'D PARTS	LH REQ.	RH REQ.	PART NO.								LH REQ.	RH REQ.	LH REQ.	RH REQ.	LH REQ.	RH REQ.	LH REQ.	RH REQ.
REQUIREMENTS PER AIRPLANE				MAT.	PARTS LIST PER ASSY.																
A C																					
NAVY	NOTED.	NOTED		SP 53	Z-P-2 GP										OPPN 4/14/37	MATTHEY 4/23/37	Ch				
MATERIAL		SPEC.		HEAT TREAT	FINISH										DRAFT	CHECK	EXAM.	ENG			

REPLACES	[redacted] 2/3/38 APPROVED DATE	
REPLACED BY	.51 CALC. WT. J.B.J. ACT. WT.	
LIGHT ON DIMENSIONS UNLESS OTHERWISE SPECIFIED 1/32	SCALE 12"=1'-0"	

CONSOLIDATED AIRCRAFT CORP.
SAN DIEGO, CALIF.
STREET ET, NO. WHERE SHOWN

NAME BOX-FURN.-COMPASS MOUNTING

OPP. HAND

DWG. SIZE D

28F2533

PRINTED ON VARIABLY TANNED CLOTH

SUPPLIES & EQUIPMENT CLASSIFICATION			
LET	ALTERATION	DATE	BY
C	TRACED	7-15-38	[illegible]
D	ADDED -4 ASS'Y FOR PBY-1 & PBY-2	6-16-39	[illegible]
E	NEW ASS'Y. -58 ADDED	11-26-40	[illegible]
F	CHG'D MAT'L FROM 20 OZ. WATER PROOF COTTON DUCK TO 8 OZ. WATERPROOF COTTON DUCK.		
	W/C CHG. NEC.	6-8-42	CLARK
G	REMOVED MAT. NOTE FOR -2, -3 FROM WATERPR. DUCK SPEC. 24D4. "ADD. NOTE "MAT'L FOR -2, -3 ... 24D4" W/C CHG. NEC.	1-8-43	[illegible]
H	IN E/M, ADDED Q1601-133 (12) & Q1601-16 (12) AT AC225-1, Q1601-133 & Q1601-16, ADDED "SEE NOTE" ON FACE, REPLACED CALL OUT "AC225-1 12 PLACES" WITH NOTE: "Q1601-133 & Q1601-16, OR AC225-1 12 PLACES." NO WT CHG	9-27-43	MOORE

C.O. 7513
E.O. 26730

NAVIGATORS RAAM GORDYN

NAVIG'S. WINDOW SCREEN.

28F3008.

THESE FASTENERS ARE LOCATED THE SAME DISTANCE FROM EDGE AS FASTENERS AT OTHER END.

(E) STENCIL ON -58 ASS'Y ONLY

(F) -2, -3 NOTE: MAT'L. FOR -2, -3 TO BE C.A.C. FAB'G-50 8 oz. DUCK TREATED IN ACCORDANCE WITH NAVY SPEC. 24D4. (G)

(H) Q1601-133 & Q1601-16, OR AC225-1 12 PLACES

2½ HEM - ALL FOUR SIDES

NOTE:- THREAD AND STITCHING TO BE IN ACCORDANCE WITH SPEC. # 49CB.

STENCIL APPROX. AS SHOWN
28F3008 FOR -0 ASS'Y
28F3008 FOR -4 ASS'Y

19 1/4

5 1/8 ON -4
5 13/32 ON -0
7 1/16 ON -4
5 15/16 ON -0
29/32 ON -0
7/8 ON -4
21 7/8 ON -4 ONLY
5 13/32 ON -0
4 15/16 ON -4
1/2 ON -0
17 1/8 ON -0 & -4
7/8 ON -4
REF 29/32 ON -0
1/32 ON -0
1 1/16 ON -0 & -4
1 1/16 ON -4
2 ON -0
7 1/16 ON -0 & -4
6 ON -0 & -4
6 15/16 ON -0
2 REF ON -0
1 13/16 ON -4
7 ON -4
24 FOR -2
28 5/8 FOR -3

O.H.	MODEL	NEXT ASSY.	REQ.
-58	28-5MH	28F3009	2
-58	28-5MC	28F3009	2
	PBY-5B	28F3009	2
	28-5MC	28F3009	2

28F3008 ON 12-20-41 REPLACES
LCW APPROVED 7-15-38 DATE
REPLACED BY
GTG CALC. WT. J.R.K. ACT. WT.
LIGHT ON DIMENSIONS UNLESS ± TOLERANCE SPECIFIED
SCALE 6" = 1'-0"

O.H.	MODEL	NEXT ASSY.	REQ.	STD PARTS	LH REQ.	RH REQ.	PART NO.	LH REQ.	RH REQ.	LH REQ.	RH REQ.	LH REQ.	RH REQ.	LH REQ.	RH REQ.
	28-5ME	28F3009	2												
	28-5MC	28F3009	2												
	28-5MA	28F3009	2				Q1601-16 (SEE NOTE)	12		12					
	PBY-5A	28F3009	2				Q1601-133 (SEE NOTE)	12		12					
	PBY-5	28F3009	2				AC225-1 (SEE NOTE)	12		12					
-4	PBY-2	28F3009-3													
-4	PBY-1	28F3009-3													
	PBY-4	28F3009					-3			1					
	PBY-3	28F3009		3			28F3008-2	1							
	REQUIREMENTS PER AIRPLANE			MAT.	PARTS LIST PER ASSY.					-4					

A C
NAVY NOTED | NOTED | 24 ONE | NONE | NONE | 1-19-38 J.P.K.
MATERIAL | SPEC. | HEAT TREAT | FINISH | DRAFT | CHECK | EXAM. | ENG.

CONSOLIDATED AIRCRAFT CORP.
SAN DIEGO, CALIF.
STAMP PT. NO. WHERE SHOWN

NAME SCREEN-FURN.-NAVIGATORS COMPART.

OPP. HAND

DWG. SIZE D

28F3008

800E18Y

SUPPLIES & EQUIPMENT CLASSIFICATION			
LET	ALTERATION	DATE	BY
B	TRACED	4-1-38	[illegible]
C	ADDED -3 ASS'Y. FOR PBY-1 & -2.		
	ADDED 28F3008-9, CALLED OUT		
	ON 28F3009-3 ASS'Y	9-10-37	DWILLIS
D	ADDED -58 ASS'Y. & 28F3008-58	12-6-40	CARLBERG

A.R. 7122

A.R. 26780

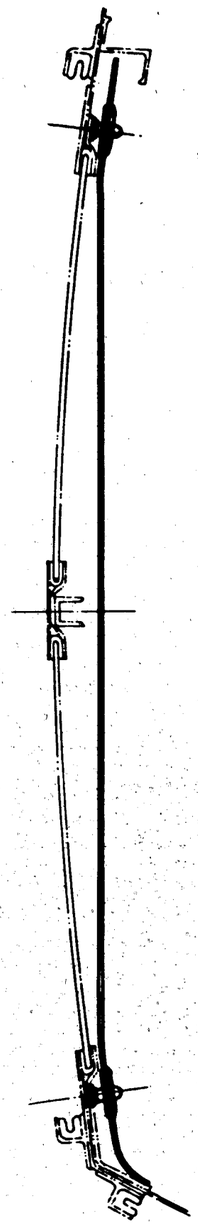

SECTION A-A

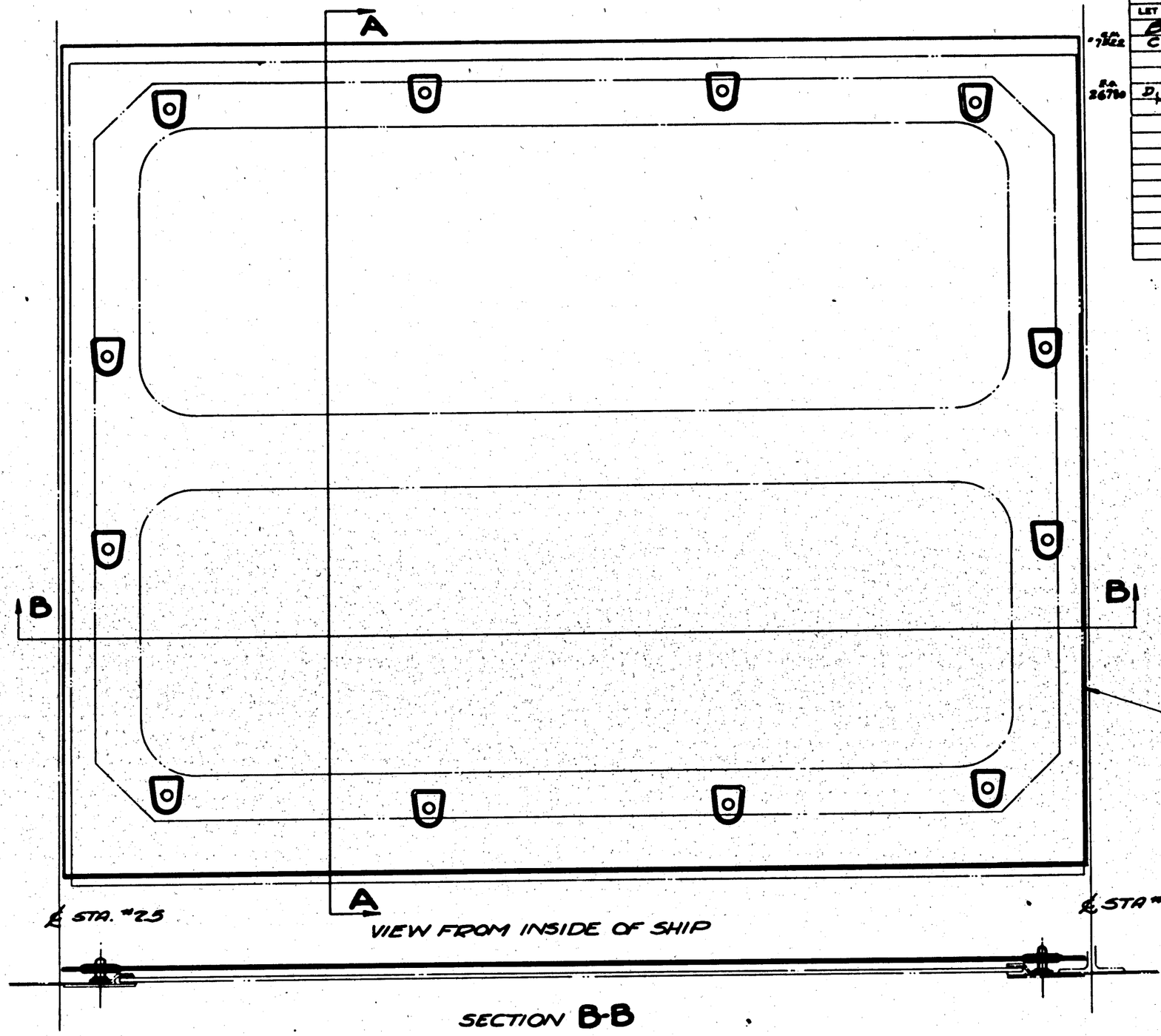

SECTION B-B

NOTE:
THIS INSTALL. IS SYMMETRICAL ABOUT ℄ OF SHIP. PORT SIDE SHOWN.

	PBY-5A	28F6002	1										
	PBY-5B	28F7002	1										
-58	28-SMN	28F5502								28F3008-58			1
-3	PBY-2												
-3	PBY-1									28F3008-9		2	2
	PBY-4	28F1002											
	PBY-3	28F1002								28F3009	2		2
				O.H.	MODEL	NEXT ASSY.	REQ.	ST'D PARTS	LH REQ.	RH REQ.	PART NO.	-0	-3	-58

REPLACES 28F3009 OF 12-7-37	APPROVED [redacted] 4-1-38 DATE	186 CALC.WT.	ACT.WT.	REQUIREMENTS PER AIRPLANE
REPLACED BY		SCALE 6" = 1'0"		
LIMIT ON DIMENSIONS UNLESS OTHERWISE SPECIFIED ±		AC		
		NAVY NOTED	NOTED	NONE
		MATERIAL	SPEC.	HEAT TREAT

MAT. — NONE — FINISH

PARTS LIST PER ASSY.

ECF. 4-30-37 — DRAFT: R. — CHECK — EXAM. — ENG.

CONSOLIDATED AIRCRAFT CORP. BUFFALO, N.Y.

STAMP PT. No. WHERE SHOWN

NAME: SCREEN INSTALL. FURN. - NAVIG. COMPT.

OPP. HAND

SIZE D — DWG. 28F3009

SUPPLIES & EQUIPMENT CLASSIFICATION			
LET	ALTERATION	DATE	BY
B	TRACED	5-28-42	[illegible]
C	#10(.193) 8 HOLES WAS #28(.140)8		
	HOLES. 1 3/32 DIA. WAS 1 1/32 DIA. ON -5		
	#10(.193). 8 HOLES WAS #28		
	(.140) 8 HOLES 1 5/32 WAS 1 1/32 ON -6		
	NEG. WT. CHG.	5-6-42	[illegible]

DRILL #10(.193) -4 HOLES
DRILL ONE 1 3/32 DIA. HOLE Ⓒ

(-4) .051 AL ALLOY BENT UP SHEET 24ST. SPEC 47A10 COND T.

(-2) ASS'Y

(-5) 1 3/8 x 1 x .080 x 1 1/8 LONG CLIP. DIE K-11820 (2nd) SPEC. 46A9 COND T.

AN442-04 RIVETS

(-6) TO BE MADE FROM (2ND) 1 3/8 x 1 x .080 PLAIN ANGLE DIE K-11820 SPEC. 46A9 COND T.

AN442-09 RIVETS

(-7) .090 AL ALLOY SH'T (2nd) SPEC 47A10 COND T

NOTE ALL BEND RAD 1/8

5 5/32 SLOT

(-8) .090 AL ALLOY SH'T 24ST. SPEC. 47A10 COND T.

5 5/16 ± 1/64

PRICK PUNCH 8 PLACES AS SHOWN ON -4. DO NOT DRILL OR RIVET UNTIL FINAL ASS'Y.

5 SLOT

DRILL 2 - 1 3/32 DIA. HOLES Ⓒ

DRILL #10(.193) 8 HOLES Ⓒ

(-3) TO BE MADE FROM 2 3/8 x 1 3/8 x .040 AL. ALLOY EXT. ANGLE 24ST. SPEC. 46A9 COND T

GP-GREEN PRIME FINISH

39° APPROX.

20° APPROX.

45°

SEE RELEASES

O. H.	MODEL	NEXT ASSY.	REQ.	ST'D PARTS	LH REQ.	RH REQ.	PART NO.	LH REQ.	RH REQ.	LH REQ.	RH REQ.	LH REQ.	RH REQ.	LH REQ.	RH REQ.
-6	PB2Y-2	29F1159	1												
-5	PB2Y-2	29F1159	1												
-4	PBY-4														
-3	PBY-4														
-2	PBY-5	28F3000		AN442-04			28F3011-3	1							
	PB2Y-3	SEE B.M.		AN442-09			28F3011-2	1							

REQUIREMENTS PER AIRPLANE — MAT. — PARTS LIST PER ASSY.

-8	2														
-7	2														
-5	1														
-4	1														
-2	ASSY														

REPLACES	APPROVED	DATE
	-5 F.38	
REPLACED BY	-3 F.04	
	GALC. WT.	ACT. WT.
1/32 UNLESS OTHERWISE SPECIFIED ± FRACTIONAL DECIMAL	12 "=1'-0" SCALE	

A C			GP	DRAWN		PLANNT	R
NAVY NOTED	NOTED	NONE	2-P-2	11/2 1/37			
MATERIAL	SPEC.	HEAT TREAT	FINISH	DRAFT	CHECK	EXAM.	ENG.

CONSOLIDATED AIRCRAFT CORP. SAN DIEGO, CALIF.

NAME: BRACKET - FURN NAVIG'S. INSTR. PANEL

OPP. HAND

DWG. SIZE D — 28F3011

SUPPLIES & EQUIPMENT CLASSIFICATION			
LET	ALTERATION	DATE	BY
A	TRACED	3-29-36	[illegible]
B	RELOCATED DIM. ON FASTENER	4-11-40	[illegible]
	(WAS 1/8 FROM TOP) NOW 1 FROM		
	LOWER EDGE OF FLAP ADDED		
	NOTE "ALL DIM. APPROX. STITCH.		
	MAY VARY TO FACILITATE MFG"		
C	CHG'D MAT'L FROM #12 OLIVE		
	DRAB WATERPROOF DUCK TO 8 OZ.		
	OLIVE DRAB WATERPROOF DUCK.		
	4/T. ON HAND	6-9-42	[illegible]
D	REMOVED NOTE - (B) MAT. 8 OZ. OLIVE		
	DRAB WATERPR. DUCK SPEC. 24D4."		
	ADD: "MAT. NOTE: -2 — 24D4." WT. CHG. NEG.	1-8-43	[illegible]
E	IN B/M, AT ST'D PARTS, ADDED "Q1601-13S		
	-16, -18S, & -20"; AT AC225-5-1, & Q1601-		
	13S, -16, -18S, & -20, ADDED "SEE NOTE." ON		
	FACE, REPLACED CALLOUT AC225-1 WITH		
	NOTE: "Q1601-13S & Q1601-16, OR AC225-1".		
	REPLACED CALLOUT AC225-5 WITH NOTE		
	"Q1601-18S & Q1601-20, OR AC225-5."		
	NO WT. CHG.	9-27-43	HADK

SOCKET & WASHER
Q1601-13S & Q1601-16, OR AC225-1
(E)

POST
Q1601-18S & Q1601-20, OR AC225-5
(E)

$6\frac{1}{4}$

$7\frac{7}{8}$

$\frac{1}{2}$

SMOKE GRENADES

STENCIL $\frac{1}{2}$ BLACK LETTERS

(B)

$2\frac{3}{8}$

THIS AREA AROUND TOP TO BE REINFORCED

$3\frac{1}{8}$

(C) (D)
-2
MATERIAL NOTE:
-2 TO BE MADE FROM C.A.C. FAB #6-50, 8 oz. DUCK TREATED IN ACCORDANCE WITH NAVY SPEC. 24D4.

NOTE: ALL DIMENSIONS ARE APPROX. STITCHING MAY VARY TO FACILITATE MFG (B)

SHIPS 25 ton
SHIPS 1-24

REPLACES	APPROVED	DATE
	[illegible]	3-29-36
REPLACED BY	.13 CALC. WT.	ACT. WT.
LIMIT ON DIMENSIONS UNLESS ± OTHERWISE INDICATED	12"=1'-0" SCALE	

O.H.	MODEL	NEXT ASSY.	REQ.	ST'D PARTS	LH REQ.	RH REQ.	PART NO.	LH REQ.	RH REQ.	LH REQ.	RH REQ.	LH REQ.	RH REQ.	LH REQ.	RH REQ.
				Q1601-20		1									
	P8Y-5	28A5100	1	Q1601-18S		1									
	P8Y-5	NA44180	1	Q1601-16		1									
	P8Y-5A	28A5100	1	Q1601-13S		1									
	P8Y-8	28A032		AC225-5		1									
-0	P8Y-8	28A032		AC225-1		1	28F3012-2	1							

REQUIREMENTS PER AIRPLANE — MAT. — PARTS LIST PER ASSY. -0

AC					1/9		Manny	R
NAVY NOTED	NOTED							
MATERIAL	SPEC.	HEAT TREAT	FINISH		DRAFT	CHECK	EXAM.	ENG.

CONSOLIDATED AIRCRAFT CORP.
SAN DIEGO, CALIF.
STAMP PT. NO. WHERE SHOWN

NAME: POUCH, PARA SMOKE GRENADE IN CONTAINER

OPP. HAND

SIZE D — DWG. 28F3012

28F3012

INCORP. BUR. AERO. CHG. PBY-5 CHG. #45
& PBY-5A CHG. #23

EQ. A450
PBY-2,3,CH-10,CH-1,
PBY-5,5A,28-5AMC

SUPPLIES & EQUIPMENT CLASSIFICATION			
LET	ALTERATION	DATE	BY
E	TRACED	3-29-41	[redacted]
F_N	AL. ALLOY SH'T. 2450 SPEC. 47A10 COND. A		
	A.H.T. NAVY SPEC. SR.53 WAS 24ST		
	COVER T. -2 & -3 ASS'Y.; PBY-5, 5A, ..	4-12-41	FRED SKY
	ADDED		
G	ADDED 28F5006-50, -8 SUB ASS'Y,	7-8-41	[redacted]
	-50 ASS'Y, & REQ'MT-2, & VIEW B		
	ADDED FURNISHED PARTS NOTE		

15 15/16 REF.
TO ℄ REAR SPAR

10 15/16
9 11/16 REF
6 11/16
1 1/2
5/8
2 3/4
2 3/4
3/8

-6 HAT - MAKE FROM EXT. SEC. M-1386 AL. AL. 24ST SPEC. 4GA8 CONDT

A — DRILL 17/64 - 8 HOLES IN WING — JIG LOCATE HOLES & NUT PLATES FOR INTERCHANGEABILITY

AC366-425
AN425 D8
AN 74-5
AC895-C40-4
Q7102 A416

1/8 R. (TRUE)

92°

SPACE — EQUALLY

DRILL 17/64 - 8 HOLES IN -6 — JIG LOCATE FOR INTERCHANGEABILITY

3/16

0524 (REF.)
1/4

1/16 R

SPACE — EQUALLY

5

5 15/32

-7 SUB ASS'Y INCLUDES -2, -3, -4, -6 & 28F5044

⑥ B (-50 ASS'Y)

28F5044

-4 COVER PLATE - .064 AL. ALLOY SH'T 24ST SPEC. 47A10 COND-T

A

LH. SIDE VIEW INSTALLATION

SYM. ℄

7/16

7/16

1 REF

1/4 HOLE IN -4 BEFORE BENDING

BEND LINE

REAM .718 +.004 -.000 ONE HOLE IN -6

⑥ NOTE: FOR LIST OF PARTS TO BE FURNISHED ON THIS SO. SEE BOM INDICATED BY ⑥. THESE PARTS TO BE INSTALLED BY NAVY AFTER WHICH BOLT INSTALL BECOMES -50.

88°

.0524 (REF.)

-8 SUB ASS'Y. (INSTALL IN REVERSE POSITION FROM -7, AS SHOWN)

28F3044-50

VIEW B ⑥

SYM ℄

REF

26°

2 15/16

7/16

5/8

1 13/32

15/16

3/16 R.

-2 SIDE PLATE - .064 AL. ALLOY SH'T 24S0 SPEC. 47A10 COND A (F) HEAT TREAT NAVY SPEC. SR-53

-3 OPPOSITE

NOTE — THIS INST. MUST BE LOCATED MIDWAY BETWEEN STA. #7 & 8 CENT. SEC. ℄ IN LINE WITH 28M3002

SECTION A-A

GEN. NOTES:

1. ALL RIVETS AN442-D5 EXCEPT AS NOTED
2. INSULATE DISSIMILAR METALS WITH MARINE GLUE & FABRIC.
3. ALL BENDS 3/16 R.

CONT. CHG. "F"

SUPPLIES & EQUIPMENT CLASSIFICATION			
LET	ALTERATION	DATE	BY
F	TRACED	3-29-43	[redacted]

SPOTWELD
6 PLACES
SPACE APPROX. AS
SHOWN

DRILL $\frac{5}{32}$ - 2 HOLES

PUNCH SLOT WITH TOOL #6056
2 PLACES 5/16 x 1 9/32

SEC. A-A

-5 .051 ALCLAD SHEET 24ST SPEC. 47A8 COND T
-9 R.H. OPP.

-4 .051 ALCLAD SHEET 24ST SPEC. 47A8 COND T
-8 R.H. OPP

-6 PLATE $2\frac{3}{16} \times \frac{7}{8}$ = .064 ALCLAD SHEET 24ST SPEC. 47A8 COND T

-D .051 ALCLAD SHEET 24ST SPEC. 47A8 COND T
-7 R.H. OPP.

LINE DRILL $\frac{5}{32}$ - 2 HOLES

LINE DRILL $\frac{5}{32}$

SPOTWELD
2 PLACES
APPROX. AS
SHOWN

BEND LINE

BEND LINE

BEND LINE

BEND LINE

ALL BENDS IN .051 SHEET $\frac{1}{8}$ R

ALL BENDS IN .064 SHEET $\frac{5}{32}$ R.

-R	PBY-5A	28A5001	1							-9		1
-L	PBY-5A	28A5001	1							-8		1
-1	PBY-4	28A3001								-7		1
	PBY-4	28A3001								-6	2	2
-1	PBY-3	28A3001								-5	1	
	PBY-3	28A3001								-4	1	
										-3	1	
									LH REQ.	RH REQ.	PART NO.	LH REQ.	RH REQ.

REPLACES

REPLACED BY

LIMIT ON DIMENSIONS UNLESS OTHERWISE SPECIFIED ± 1/32 & 1/2°

APPROVED [redacted] 3-29-43 DATE

CALC. WT. [redacted] ACT. WT.

SCALE 12" = 1'0"

AC

NAVY NOTED

MATERIAL

CONSOLIDATED AIRCRAFT CORP. BUFFALO, N. Y.

STAMP PT. No. WHERE SHOWN

O.H.	MODEL	NEXT ASSY.	REQ.	ST'D PARTS
REQUIREMENTS PER AIRPLANE				MAT.
NOTED	NONE			Z-P
SPEC.	HEAT TREAT			FINISH

PARTS LIST PER ASSY.

4-15-43	4-15-43		G.
DRAWING	LAYOUT	PROPERTY	GR.
DRAFT	CHECK	EXAM.	ENG.

NAME BRACKET ASSY-ARM'T-TORPEDO RELEASE PULLEY-REMOVABLE

OPP. HAND 28P3051-1

SIZE D DWG. 28P3051

E.O. 24435

SUPPLIES & EQUIPMENT CLASSIFICATION			
LET	ALTERATION	DATE	BY
C	TRACED	9-29-39	[redacted]
D	CHANGED WELDING PATTERN		
	WAS SHOWN CONTINUOUSLY.	11-1-40	[redacted]
E	ON FACE OF DWG., FOR -6 & -8, RE-		
	PLACED SPEC. "46328" WITH "AN-QQ-		
	S-684" FOR -4 & -7 REPLACED		
	SPEC. "47514" WITH "AN-QQ-S-685."		
	IN B.M. REPLACED "NORMALIZE"		
	WITH "90,000 TO 125,000 #/□".		
	NO WT. CHG.	6-2-43	[redacted]

-4 .050 CM. ST'L SH'T SPEC AN-QQ-S-685

-8 6/16 O.D. × .058 CM. ST'L TUBE - SPEC. AN-WW-T-850 15/16 LONG

-2 5/4 O.D × .065 CM. ST'L TUBE - SPEC AN-W-W-T-850

5/16 O.D. × .058 C.M. ST'L TUBE SPEC. AN-WW-T-850 1/8 LONG -9

5/8 C.M. ST'L ROD SPEC. AN-QQ-S-684 DRILL & REAM AS SHOWN -6

(PART -6 MADE OVERSIZE TO ACCOMMODATE VARIATIONS IN LOCATION DUE TO WELDING)

7/16 C.M. STEEL ROD SPEC. AN-QQ-S-684 DRILL & REAM AS SHOWN -8

1 1/2

1

7

℄ SYM.

LENGTH AFTER WELDING $1\frac{1}{8}{}^{+0}_{-1/32}$

$38\frac{5}{8}$

DRILL 7/16 THRU -2 & -5

DRILL 3/8 THRU -2 & -5

DRILL 5/16 THRU 3 PLACES TO FIT -5

30°

28F3055

$3^{+.02}_{-.000}$

$6\frac{1}{8}$

12

SEE DETAIL B

$8\frac{5}{16}$

7/8 O.D. × .058 C.M. STEEL TUBE - SPEC. AN-WW-T-850 SPLIT & WELD IF NECESSARY -3

REAM .250 $^{+.001}_{-.0005}$

REAM .3125 $^{+.001}_{-.0006}$

$11\frac{1}{16}$

$8\frac{1}{8}$

$1\frac{1}{4}$

$4\frac{1}{2}\pm\frac{1}{64}$

3 R.

5 R.

$2\frac{11}{16}$

A

A

1/16

1 1 1

WELD D

.050 CM. ST'L DISK SPEC. AN-QQ-S-685 -7

$\frac{13}{32}$

$\frac{1}{2}$

$\frac{5}{16}$ R.

$\frac{5}{64}{}^{+1/64}_{-0}$

FINISH INSIDE - SPEC. HRO

FINISH OUTSIDE C-P

USE LIGHT WELDS THRUOUT

SECTION A-A

SCALE 12" = 1'0"

DETAIL B

SCALE 12" = 1'0"

										-9	1
										-8	1
										-7	2
										-6	1
										-5	2
										-4	1
										-3	1
										-2	1
										LH REQ.	RH REQ.
C-70496 ONLY		PBY-5A	28A3011	2				PART NO.			
		PBY-5	28A3011	2							
		PBY-4	28A3011								
		PBY-3	28A3011								
		O.H.	MODEL	NEXT ASSY.	REQ.	ST'D PARTS	REQUIREMENTS PER AIRPLANE		MAT.	PARTS LIST PER ASSY.	

REPLACES		APPROVED [redacted]	5-29-39 DATE		4-29-41	4-23-41		Gr.
REPLACED BY		1.80 CALC. WT.	ACT. WT.	AC				Rel.
LIMIT ON DIMENSIONS UNLESS OTHERWISE SPECIFIED ± 1/32		SCALE 6"=1'0" & NOTED		NAVY NOTED	NOTED	90,000 TO 125,000 #/□"	NOTED	DRAFT	CHECK	EXAM.	ENG.
[redacted]				MATERIAL	SPEC.	HEAT TREAT	FINISH				

CONSOLIDATED AIRCRAFT CORP. BUFFALO, N.Y.

STAMP PT. No. WHERE SHOWN

NAME TUBE-ARM'T.-TORR PROP. STOP

OPP. HAND

SIZE D SHEET

28F3055

SUPPLIES & EQUIPMENT CLASSIFICATION			
LET	ALTERATION	DATE	BY
A	TRACED	2-4-38	WEH/AHEH
B	AC225-9 WAS AC225-8	6-28-40	
C	REVISED -58L WAS REVISED -58R CHG AC-225-8 TO 10 (SHIP WAS 12)	11-1-40	
	Added AC-25-8 (12) (SHIP)		
D	NEW ASSY. -58 R & L ADDED	11-26-40	
E	ADD TO FACE DWG & BM. Q7008	5-27-41	
	(24), CHG BM. REQ. AC225-9 (14)		
	WAS (12), AC225-8 (10) WAS (12)		
F	IN BM, ADDED "Q1601-22 (5)" & "Q1601-23 (7)";		
	AT AC225-8, AC225-9, Q1601-22, & Q1601-23,		
	ADDED "SEE NOTE" ON PICK, REPLACED CAL.		
	OUT AC225-8 (12) WITH NOTE. "Q1601-22, OR		
	AC225-8 (10)"; REPLACED CALLOUT AC225-8		
	(14) WITH NOTE: "Q1601-23, OR AC225-9 (14)"		
	NO INT. CHG.	8-27-43	

E.O. 22911A

E.O. 30583
E.O. A4725
PBY 5.6A
OR-10, 28-5-ALL

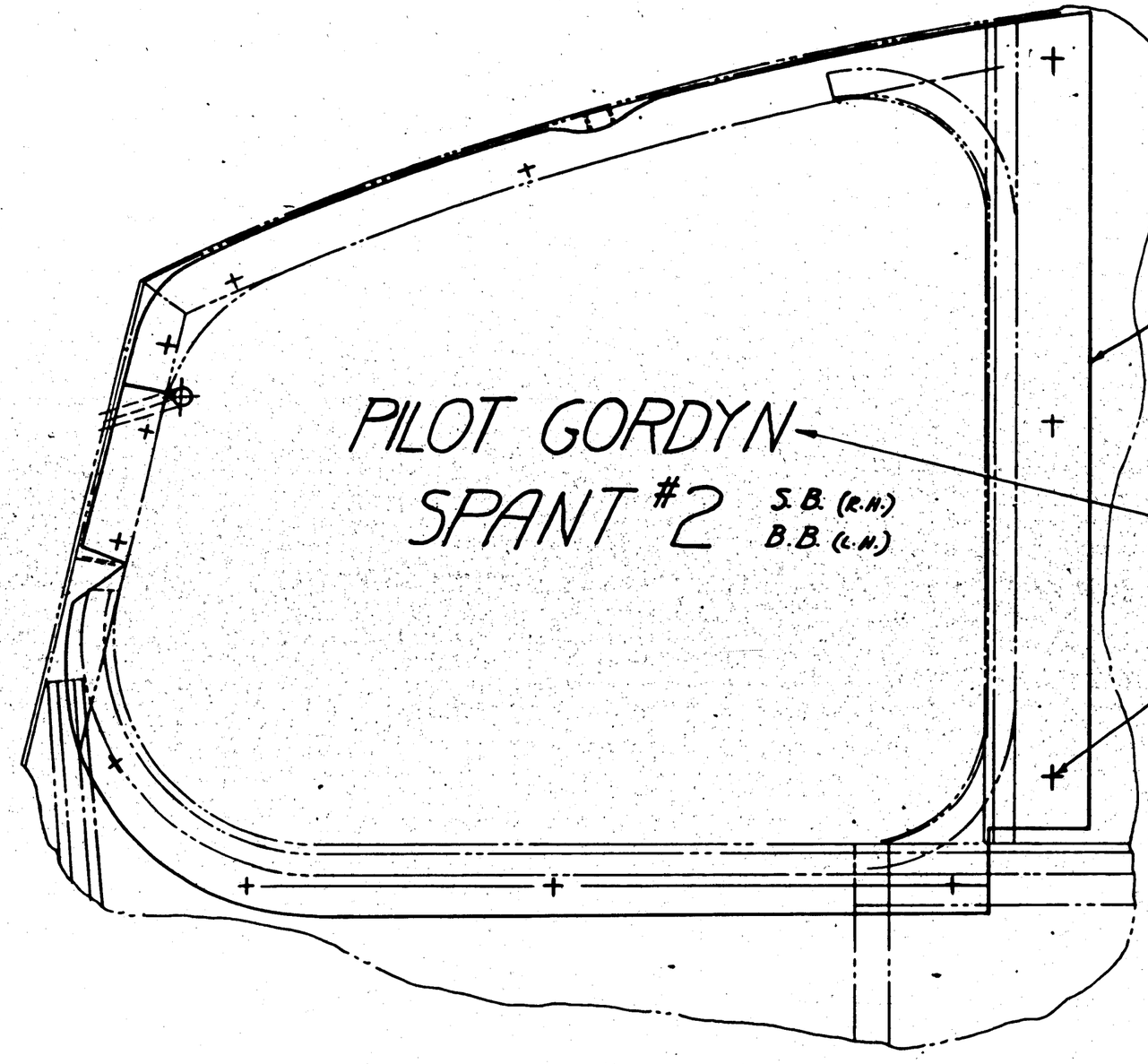

VIEW LOOKING FORWARD
PORT SIDE BL'KH'D. # 2

O.H.	MODEL	NEXT ASSY.	REQ.	ST'D PARTS	PART NO.	LH REQ.	RH REQ.	LH REQ.	RH REQ.	LH REQ.	RH REQ.	LH REQ.	RH REQ.	LH REQ.	RH REQ.
-58R	28-5AMN	28F266	1												
-58L	28-5AMN	28F266	1												
L/H	28-5AMC	28F266	1												
-58R	28-5MN	28F266	1												
L/R	28-5ME	28F266	1												
L/R	28-5MC	28F266	1												
L/R	28-5MA	28F266	1												
-R	PBY-6A&B	28F266	1EA												
-L	PBY-5A&B	28F266	1EA												
-R	PBY-6	28F266	1												
-L	PBY-6	28F266	1												
-58L	28-5MN	28F266	1												
-1	PBY-4	28F266		Q1601-23 or AC225-9		7	7								
	PBY-4	28F266		Q1601-22 or AC225-8		5	5								
-1	PBY-3	28F266	E	Q7008-AL .11-.064		12	12								
	PBY-3	28F266		AC225-8		6	6								
-1	PBY-2	28F266	C	AC365-832 (24)		12	12	28F3062-1		1					
	PBY-2	28F266	C B	AC 225-8 (12) AC 225-9 (14)		7	7	28F3062		1					

REQUIREMENTS PER AIRPLANE	MAT.	PARTS LIST PER ASSY.
A C		
NAVY		

MATERIAL	SPEC.	HEAT TREAT	FINISH	DRAFT	CHECK	EXAM.	Engr.
			NONE	6-16-37 MACH		Cm M.M.R.	R.

REPLACES

REPLACED BY

APPROVED 2-1-38 DATE

.71 J.B.J. CALC. WT. ACT. WT.

6" = 1 FT. SCALE

CONSOLIDATED AIRCRAFT CORP. SAN DIEGO, CALIF.

NAME COVER INST. - FURNS. - REAR WINDOW - PILOT'S COCKPIT

OPP. HAND 28F3060-1

DWG. D 28F3060

E	CHGD MATL FROM RE-TWILL PROOF DUCK TO 8 OZ. WATERPROOF DUCK Mr. Chg. 388		
F	AN FACE OF DWG. AND IN B.M. ADD. -8E FOR PBY-5 REPLACING -8 FOR DIXON. ADD DETAIL B.	9-12-38	CLARK
G	ADDED SPEC CAC FAB 6-50 FOR -2 TO -7 INCLUSIVE.	11-12-38	BROWN

FO. A-68061

NOTE: ALL SPARES FOR AIRPLANES PRIOR TO 28-5ME #79, 28-5MA-6 & PBY-5 #89 ARE TO BE FURNISHED WITHOUT FASTENERS INSTALLED SINCE THEY MUST BE LOCATED ON INSTALLATION TO SUIT STUDS. "JIG LOCATE ALL FUTURE STUDS & FASTENERS PER DWG TO PROVIDE INTERCHAGEABILITY."

H	IN B/M, ADDED "Q1601-155(R) & Q1601-16 (R); AT AC225-1, Q1601-155, & Q1601-16, ADDED "SEE NOTE" ON FACE REPLACED CALLOUT AC225-1 WITH NOTE: "Q1601-155 & Q1601-16, OR AC225-1." NO STR. CHG.	9-27-38	HOOK

SUPPLIES & EQUIPMENT CLASSIFICATION			
LET	ALTERATION	DATE	BY
A	TRACED	3-9-38	
C	MADE 19⅝ TO 20¾ & 10 TO 10¾. ON CUTOUT & TAB CHG'D 1 TO 1¼ & IN TO 1⅞ OTHER DIM'S CHG'D TO CONFORM. CHG'D DIRECTION OF "LIFT THE DOT" MARKER ARROW ADDED NOTE. "ALL DIM'S APPROX STITCHING MAY VARY TO FACILITATE MFG."	4-16-38	
D	ON DWG. 3⅛ WAS 2⅝; REMOVED 9⅝ DIM. & FASTENER, ADDED 12⅞ DIM. REMOVED 2", ⅝, 1" ⅝ & 7⅝ DIM. ADDED 1⅝ (2) PLCS, & 2⅝ DIM, ADDED NOTE VIZ- ALL SAMES FOR- ETC. ADDED 3⅜ & ½" DIM, REPLACED ⅜ BY 1⅝, 8⅛ BY 3⅝ - REMOVED 10⅛ DIM.	7-14-38	

$10\frac{1}{2}$ APPROX. Ⓒ

$18\frac{1}{4}$ Ⓒ

$17\frac{3}{4}$ APPROX. Ⓒ

$\frac{3}{8}$ D DRAIN HOLE LOCATE APPROX. AS SHOWN

LOCATE THESE TWO FASTENERS ON ASS'Y.

3R

$\frac{3}{8}$

$5\frac{13}{16}$

Ⓒ

-4 REF.

Ⓓ

$6\frac{1}{4}$ Ⓒ

4

3R

$61\frac{1}{8}$R

$1\frac{1}{2}$

$\frac{1}{8}$

$\frac{1}{4}$

$1\frac{5}{16}$

2R

$13\frac{1}{2}$

-4 FLAP FOR OVERLAP & CORNER REINF.

-7 OPP.

Ⓔ 8 OZ. WATER PROOF DUCK CAC. FAB 6-50 SPEC. 24D4 (COMM.) Ⓖ

$10\frac{1}{4}$ APPROX.

4R

$12\frac{3}{16}$

$3\frac{1}{8}$

$1\frac{5}{16}$

$1\frac{3}{16}$

17

$3\frac{3}{16}$

$8\frac{1}{8}$

$1\frac{3}{8}$ ALL AROUND (-3)

$\frac{7}{8}$ $1\frac{7}{8}$ Ⓒ

$20\frac{1}{4}$ Ⓒ

-L (REF) LOCATE AS SHOWN Ⓕ

NOTE 4 & 9

SEE RELEASE SHEET

$18\frac{1}{4}$

$1\frac{5}{8}$

$1\frac{1}{4}$

$1\frac{5}{8}$

$2\frac{1}{4}$

$\frac{3}{4}$

DETAIL B -8R ONLY Ⓕ

(-8R SAME AS -R EXCEPT FOR DETAIL B.)

SEE DETAIL A FOR 28F3062-1 (R.H.)

SEE DETAIL B FOR -8R ASSY. Ⓕ

NOTE: ⅜ HEM FOR -28-3 ALL AROUND.

Ⓐ Q1601-155 & Q1601-16, OR AC225-1 LOCATE ON ASS'Y. 12 PLACES ARROW SHOWS DIRECTION OF "LIFT-THE-DOT" FASTENER

$\frac{1}{2}$

$3\frac{3}{4}$

$1\frac{3}{8}$

$1\frac{1}{4}$

$4\frac{1}{2}$

DETAIL A R.H. PART ONLY (-1) Ⓕ

NOTE: ALL DIMENSIONS ARE APPROX. STITCHING MAY VARY TO FACILITATE MANUFACTURE.

-2 L.H. AS SHOWN

-5 OPP. AS SHOWN DETAIL A Ⓔ 8 OZ. WATER PROOF DUCK C. AC. FAB 6-50 SPEC. 24D4 (COMM.) Ⓒ

-3 L.H. SAME SHAPE AS -2 $1\frac{3}{4}$ WIDE

-6 OPP. AS SHOWN DETAIL A Ⓔ 8 OZ. WATER PROOF DUCK C. AC. FAB 6-50 SPEC. 24D4 (COMM.) Ⓒ

-3 -6 REF. SEW -2 -5 REF. SEW

TYPICAL SECTION FULL SIZE

| | | |

SUPPLIES & EQUIPMENT CLASSIFICATION			
LET	ALTERATION	DATE	BY
C	TRACED	8-[illegible]-38	[illegible]
D	ADDED-2 ASSY. W.T. CHG. NEG.	6-8-42	[illegible]

E.O. A39648

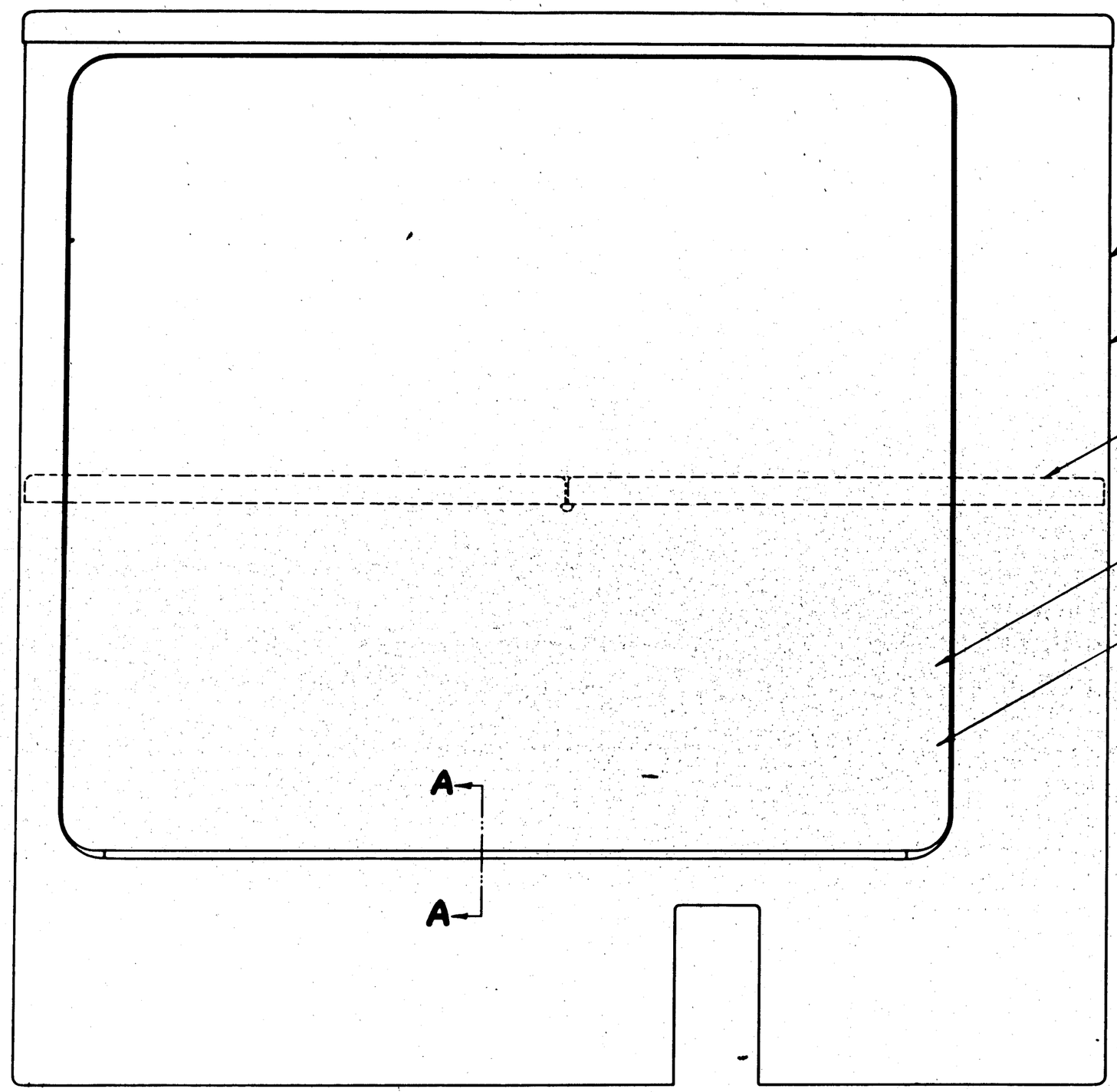

28F3066-41 Ⓓ
(FOR -2 ASS'Y ONLY.)

28F3066 BOX
28F3066-40 BOX
(FOR -40 ASS'Y ONLY)

28F3068 SHELF ASS'Y.
28F4019 SHELF ASS'Y.
(FOR -2 & -40 ASS'Y. ONLY)

28F3067 DOOR ASS'Y. (ON -40 ONLY)
28F3067-30 DOOR ASS'Y

28F3067-31 DOOR
(FOR -2 ASS'Y ONLY.) Ⓓ

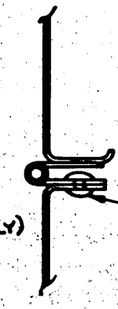

AN 442-D4 RIVET
9 REQ'D. ON -40 ONLY

SECTION A-A
SCALE - 12" = 1'-0"
(FOR -0 & -40 ASS'Y'S ONLY.)

NOTE:
HINGE ON 28F3067 IS TO BE SPOTWELDED TO 28F3066 BOX, EXCEPT WHERE 3 AN 442-D4 STITCHING RIVETS ARE TO BE USED AS LOCATED SPOTS ARE TO BE APP. 1" O.C.

GP-GREEN PRIME

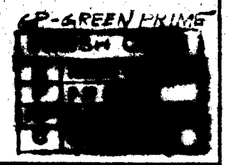

C-70996177113

-0	-2	-40	PART NO.	REQ.
		1	28F3067-31	
		1	28F3066-41	
1			28F3067-30	1
		1	28F3066-40	1
	1		28F4019	1
1			28F3068	1
		1	28F3067	1
1			28F3066	1

-40	PBY-5A	28F3070	1			
-40	28-5AMN	28E3070				
-40	28-5MN	↕				
-2	PBY5-A		1			
-2	PBY-5	28E3070				
-40	PBY-4	28F3070-40				
	PBY-3	28F3070		AN442-D4	3	
O.H.	MODEL	NEXT ASSY.	REQ.	ST'D PARTS	LH	RH

REPLACES

REPLACED BY

LIMIT ON DIMENSIONS UNLESS OTHERWISE SPECIFIED ± ±1/2

APPROVED 3-28-38 DATE

12.95 CALC. WT. ACT. WT.

SCALE 6"=1'-0" & NOTED

AC							
NAVY NOTED	NOTED	NOTED	GP - TOUCH UP	CHKMN		CH.	
MATERIAL	SPEC.	HEAT TREAT	FINISH	7-14-37		PRINT	R.
				DRAFT	CHECK	EXAM.	ENG.

REQUIREMENTS PER AIRPLANE | MAT. | PARTS LIST PER ASSY.

CONSOLIDATED AIRCRAFT CORP. BUFFALO, N.Y.

STAMP PT. No. WHERE SHOWN

NAME FOOD LOCKER ASS'Y. FURNS

OPP. HAND

SIZE D 28F3069

SUPPLIES & EQUIPMENT CLASSIFICATION			
LET	ALTERATION	DATE	BY
A	TRACED	2-20-59	[redacted]

LEVELING PROCEDURE

FIRST - LEVEL SUPPORT ATHWART-SHIP BY VARYING THE AMOUNT ANGLE "A" PROJECTS PAST SPACER. TIGHTEN CLAMP "B"

SECOND - LEVEL SUPPORT FORE & AFT BY ADJUSTING BRACE "C" TO CONTACT GUSSET ON WINDOW FRAME. TIGHTEN SCREWS ON BRACE.

THIRD - ADJUST SCREW "D" AGAINST DRAIN TROUGH TO PROVIDE RIGIDITY.

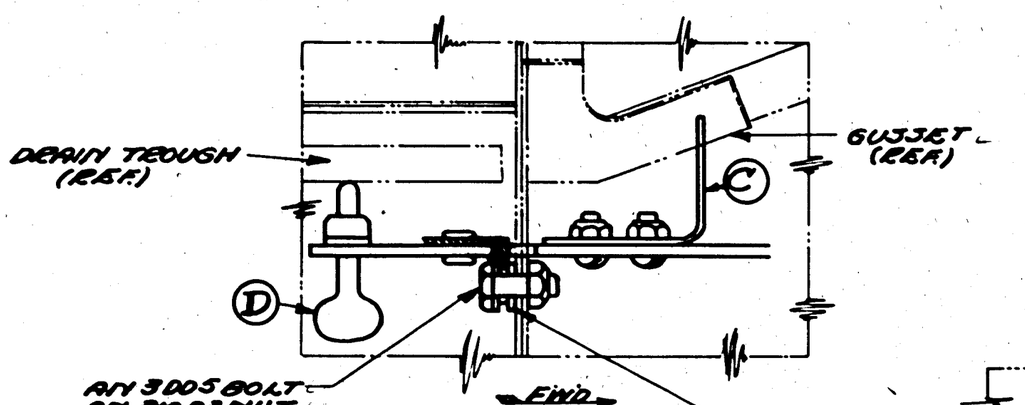

SECTION B-B
FULL SIZE

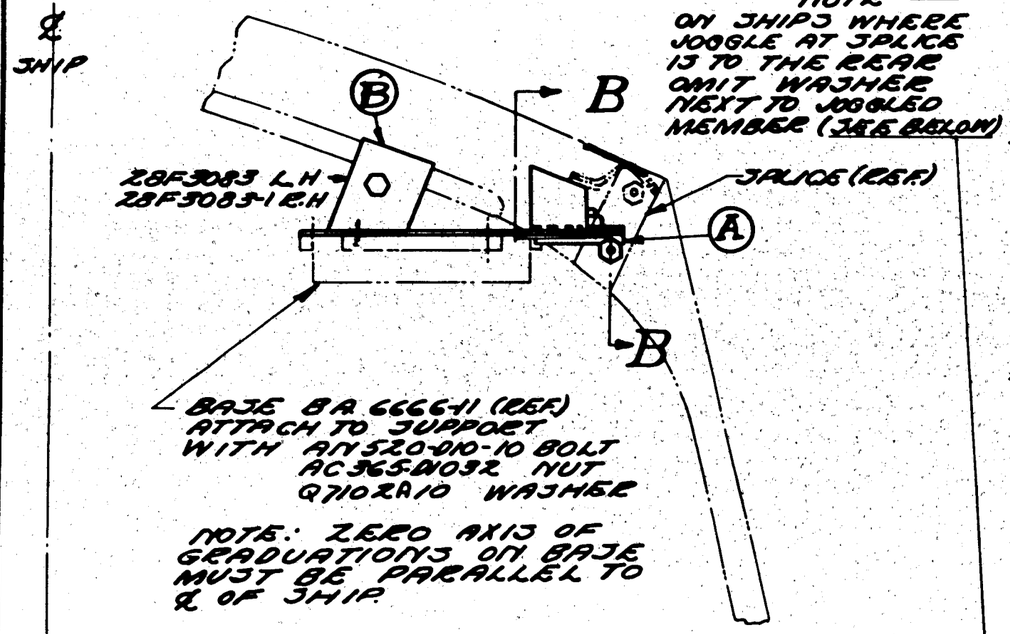

VIEW LOOKING AFT.

NOTE
ON JHIPS WHERE JOGGLE AT JPLICE IS TO THE REAR OMIT WASHER NEXT TO JOGGLED MEMBER (JEE BELOW)

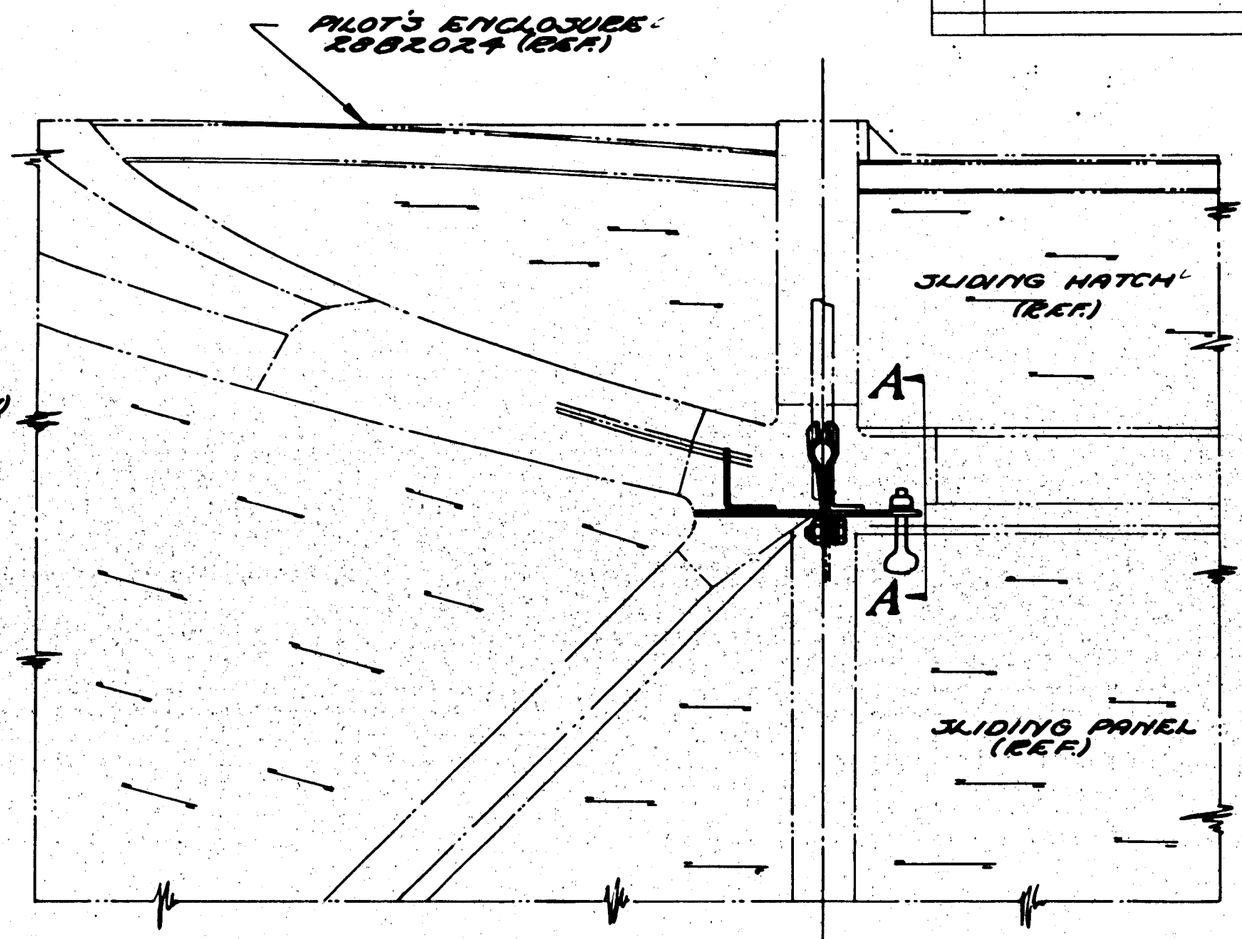

SIDE VIEW PILOTJ ENCLOJURE
LOOKING INBOARD

NOTE: FOR PBY-1
JEE C.O. 6874

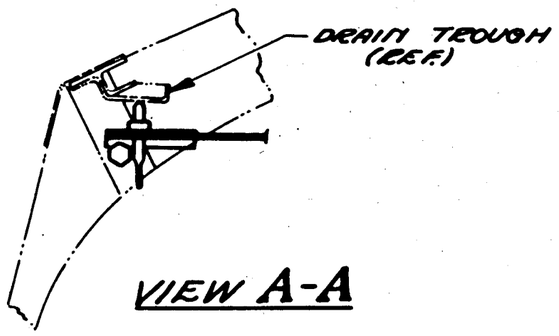

VIEW A-A

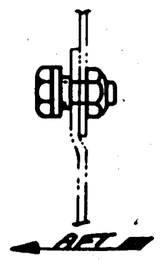

O. H.	MODEL	NEXT ASSY.	REQ.	ST'D PARTS	LH REQ.	RH REQ.	PART NO.	LH REQ.	RH REQ.	LH REQ.	RH REQ.	LH REQ.	RH REQ.	LH REQ.	RH REQ.
	PBY-5A	28F1091	1	AN 960-10	6										
	PBY-5B	28F1091	1	AN 960-416	8										
	PBY-4	28F1091		AN 960-10	4										
	PBY-3	28F1091		AN 380-2-2	2										
	PBY-2	28F1091		AN 520-428	2		28F3083-1	1	1						
	PBY-1	28F1091		AN 525	2		28F3083	1	-						

REQUIREMENTS PER AIRPLANE — MAT. — PARTS LIST PER ASSY.

REPLACES — APPROVED — DATE

REPLACED BY — CALC. WT. .72 — AGT. WT.

LIMIT ON DIMENSIONS UNLESS ± OTHERWISE SPECIFIED: $\frac{1}{8}$" = 1'-0"

[redacted]

AC

NAVY NOTED — MATERIAL | NOTED — SPEC. | NAME — HEAT TREAT | NOTED — FINISH

DRAFT [redacted] CHECK — EXAM. — ENG.

CONSOLIDATED AIRCRAFT CORP. SAN DIEGO, CALIF.

STAMP PT. NO. WHERE SHOWN

NAME PEDOEUJ INJT.- PILOT'S ENCLOJURE

OPP. HAND

SIZE D — DWG. 28F3084

BULKHEAD SHEET

AC365-D632

3/8

POUCH TAB

AC515D6-7

AN960-D6

AN960-D6

SEC. A-A
SCALE-12"-1'-0"

DRILL #26(.147) FOR SCREWS (12 HOLES)

28F3091 POUCH

℄ POUCH

2½ 2½

PELORUS BASE & SIGHT

A

A

PILOT'S SEAT

DOORWAY OPENING

℄ SHIP

E.O. A37535

E.O. A37362

E.O. A48799

E.O. A60357

E.O. A64141

A

Ⓓ

Ⓒ

11(REF.)

B Ⓓ

1⅛ x ¾ BULB ANGLE LOCATED JUST BELOW DOORWAY OPENING (28B1200-42 REF.)

VIEW LOOKING AFT AT REAR BULKHEAD OF PILOT'S COMPARTMENT (BLK. #2.0) SCALE - 3"-1'-0"

* NOTE — FOR XPBY-5 ONLY, THIS DIMENSION TO BE 22" ON R.H. SIDE ONLY.

SUPPLIES & EQUIPMENT CLASSIFICATION

LET	ALTERATION	DATE	BY
A	TRACED	2-15-38	ABMTS
B	[illegible]	[illegible]	[illegible]
C	CREATED -0 ASS'Y NO WT. CHG.	[illegible]	[illegible]
D	REMOVED FROM DWG. DIMS. "24" & "15" FOR -0 ASS'Y, 28 FOR -2 ASS'Y & "15 FOR -0 ASS'Y, 17 FOR -2 ASS'Y." REPLACED WITH "A" & "B" RESPECT. CREATED DIM. BLOCK & REMOVED NOTE "SYM. ℄ POUCH INSTALL."	5-8-42	[illegible]
E	CHGD -2 ASS'Y TO -0 ASS'Y FOR PBY-5 AIRCRAFT PER E.O. A48799 (SHIPS "5" & ON)	7-24-42	STRAW
F	ADDED -3 ASS'Y. FOR PBY-5 C. 91876 ("91" ON). NO WT. CHG.	9/25/42	FORM
G	"A" DIM. FOR -3 ASS'Y. 5" WAS 3⅝" NO WT. CHG.	11-11-42	[illegible]
H	LIMITED -0 ASS'Y PBY-5A NOA(S) 464 TO SHIP "1613 RELEASED -2 ASS'Y PBY-5A FOR NOA(S) 464 SHIP "1614 & ON. NO WT. CHG.	10-15-43	[illegible]

DIMENSION	A	B
PORT SIDE -0 ASS'Y.	23	13¾
PORT SIDE -2 ASS'Y.	28	17
STARB'D SIDE -0 ASS'Y.	24½	15
STARB'D SIDE -2 ASS'Y.	24½	15
PORT SIDE -3 ASS'Y.	8	2 3/4
STARB'D SIDE -3 ASS'Y.	24½	15

O. H.	MODEL	NEXT ASSY.	REQ.	ST'D PARTS	LH	RH	PART NO.	LH	RH	LH	RH	LH	RH	LH	RH	LH	RH
					REQ.			REQ.		REQ.		REQ.		REQ.		REQ.	
	REQUIREMENTS PER AIRPLANE			MAT.	PARTS LIST PER ASSY.			-0		-2		-3					
-3	PBY-5	28F1091	1														
-2	PBY-5	28F1091	1														
-2	PBY-5A	28F1091	1														
-0	PBY-5A	28F1091	1														
-0	PBY-5A	28F1091	1														
-0	PBY-5	28F1091	1														
-0	PBY-4	28F1091	1														
-0	PBY-3	28F1091	1	AN960-D6	24												
-0	PBY-2	28F1091	1	AN515D6-7	12												
-0	PBY-1	28F1091	1	AC365D632	12		28F3091	2		2		2					

REPLACES	APPROVED	DATE
REPLACED BY	CALC. WT.	ACT. WT.
LIMIT ON DIMENSIONS UNLESS OTHERWISE SPECIFIED ± 1/16	SCALE NOTED	

AC				
NAVY				
MATERIAL	SPEC.	HEAT TREAT	FINISH	

DRAWN		TRACED	G
11-3-37			R
DRAFT	CHECK	EXAM.	ENG.

CONSOLIDATED AIRCRAFT CORP. SAN DIEGO, CALIF.

NAME PELORUS POUCH INST. PILOT'S COMPARTMENT

OPP. HAND

SIZE D 28F3092

SUPPLIES & EQUIPMENT CLASSIFICATION			
LET	ALTERATION	DATE	BY
K	TRACED	4-12-38	[redacted]
L	ADDED NEW REQMTS. FOR -2-4 NEXT ASSY (TOP #25)	7-21-38	[redacted]
M	ADDED NEW PARTS -13 & -14 NEXT ASSY 28F1625	"	"
N	ADDED -7, 8-8. NEXT ASSY 28F1625	7-21-38	[redacted]
O	ADDED HOSE MATERIAL NOTE	7-21-38	[redacted]
P	ADDED -15 HOSE, L-16"	1-16-39	[redacted]
Q	ADDED -16 HOSE	2-18-39	[redacted]
R	ADDED -17 HOSE	7-6-39	[redacted]
S	ADDED PBY-5 REQ. E-18 HOSE.	12-1-39	[redacted]

AL. ALLOY SWIVEL NUT
3/8-24 THREAD
3/16 S.A.E. FITTING
FINISH- ANODIZE
BOTH ENDS

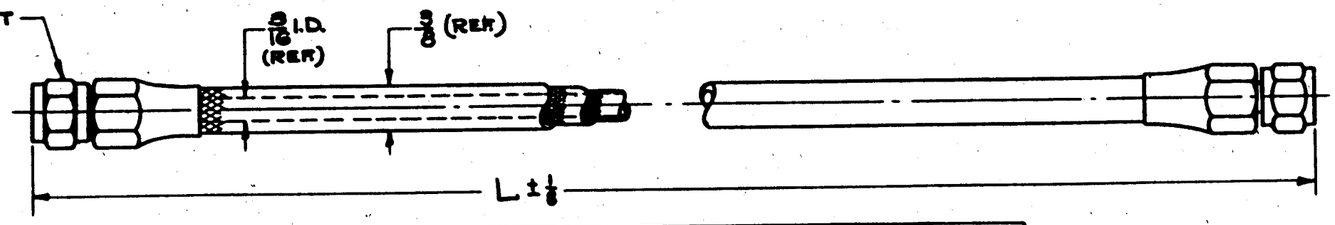

PART NO.	LENGTH	WT.	REQ'D. ON 28F3006(-8)	REQ'D. ON 28F4027(-8)	REQ'D. ON 28F1625(-8)	REQ'D. ON 28F1625-17 (-8)
28F3100-2	9		1	1	2	1
-3	10		1	1	—	1
-4	13		1	—	1	—
-5	14		2	2	—	2
-6	18		2	4	—	4
(N) -7	16		—	—	3	—
-8	20		—	—	2	—

AL. ALLOY SWIVEL NUT
7/16-20 THREAD.
1/4 S.A.E. FITTING
FINISH- ANODIZE
(WEATHERHEAD #A3124
QUICK ATTACHABLE
FITTING USED ON
PBY-3 #0842-0858
INCL. MAT.- BRASS
FINISH- C.) (REF.)

3/16 I.D. (REF.)

1/8 I.P.T. AL. ALLOY FITTING
FINISH- ANODIZE
(WEATHERHEAD #A3402 QUICK ATTACHABLE
FITTING USED ON PBY-3 #0842-0858 INCL.
MAT.- BRASS, FINISH- C) (REF.)

L ± 1/8

PART NO.	LENGTH	WT.	REQ'D. ON 28F3006(-8)	REQ'D. ON 28F4027(-8)	REQ'D. ON 28F1625(-8)	REQ'D. ON 28F1625-17 (-8)
28F3100-10	20		1	1	—	1
-11	24		1	1	—	1
-16	30					
-17	12 1/8					

AL. ALLOY SWIVEL NUT
3/16-24 THREAD
3/16 S.A.E. FITTING
FINISH-ANODIZE
-18 HOSE ONLY.

AL. ALLOY SWIVEL NUT
5/16-24 THREAD
1/8 S.A.E. FITTING
FINISH-ANODIZE
(WEATHERHEAD #A5123
QUICK ATTACHABLE FITTING
& ADAPTOR 28F5111 USED
ON PBY-3 #0842-0853
INCL.) (REF.)
-12 HOSE ONLY.

(A) 3/16 I.D. (REF.)

AL. ALLOY END CONNECTOR (WEATHERHEAD #A3303
3/8-24 THREAD
3/16 S.A.E. FITTING
FINISH- ANODIZE
QUICK ATTACHABLE FITTING
USED ON PBY-3 #0842-0853 INCL.
MAT.- BRASS, FIN.- C) (REF.)

L ± 1/8

PART NO.	LENGTH	WT.	REQ'D. ON 28F3006(-8)	REQ'D. ON 28F4027(-8)	REQ'D. ON 28F1625(-8)	REQ'D. ON 28F1625-17 (-8)
28F3100-12	9		2	2	—	—
28F3100-18	9		—	—	—	2

AL. ALLOY END CONNECTOR
7/16-20 THREAD
1/4 S.A.E. FITTING
FINISH: ANODIZE
(THIS FITTING ON END OF -14 ONLY)

[redacted]

AL. ALLOY SWIVEL NUT
7/16-20 THREAD
1/4 SAE FITTING
(FINISH-ANODIZE)
BOTH ENDS OF -13 (-15,
& W)END OF -14

3/16 I.D. (REF.)

L ± 1/8

PART NO.	LENGTH	WT.	REQ'D. ON 28F3006(-8)
(M) 28F3100-13	14		1
-14	14		
-15	16		(P)

HOSE- THREE PLY
PARAPRENE OR DUPRENE COVER
COTTON BRAID
PARAPRENE INNER TUBE
OIL & GAS HOSE- WORKING PRESSURE:- 170 LBS.
TEST PRESSURE:- 320 LBS.
TEMP. TOLERANCE:- -85°F TO +300°F

(O) OR { OIL & GASOLINE-PROOF SYNTHETIC INNER TUBE WITH HIGH QUALITY, DURABLE, WOVEN COTTON COVER, BLACK LACQUER FINISHED, REINFORCED WITH SPIRAL WIRE FILLER. (REF: FLEXO-TUBE NO. 7530 CONSTRUCTION — WIRE FILLER TO BE MADE OF NON-MAGNETIC STEEL)

TESTED & GUARANTEED BY MFGR.
MAY BE PURCHASED FROM: THE WEATHERHEAD CO.
CLEVELAND, OHIO. OR EQUIV.
OR
(O) THE FLEX-O-TUBE CO
DETROIT, MICH.

FOR PBY-5A & 5B SEE RELEASE SHEET

-2, -3, -5, -6, -10, -11, -18		PBY-5	28F4027-8
-17		PBY-2	28F2004
-16		XPBY-5A	28F5076-20
(R) (M) -2, -4, -7, -8,		PBY-1	28F1625
-13, -14		PBY-1	28F1625
-2, -3, -5, -6, -10, -11, -12	→	PBY-4	28F4027
-2, -3, -4, -8, -6, -10, -11, -12	→	PBY-3	28F3006
	-16	PBY-4	28F3076-20
	-16	PBY-3	28F3076-20

REPLACES		APPROVED [redacted]	DATE 4-12-38								
REPLACED BY											
LIMIT ON DIMENSIONS UNLESS OTHERWISE SPECIFIED ±		CALC.WT.	ACT.WT.	O.N.	MODEL	NEXT ASSY.	REQ.	ST'D PARTS	LH REQ.	RH REQ.	PART NO. LH RH
		SCALE		REQUIREMENTS PER AIRPLANE				MAT.	PARTS LIST PER ASSY.		
		AC									
		NAVY NOTED		NOTED	NONE		NOTED				
		MATERIAL		SPEC.	HEAT TREAT		FINISH		DRAFT	CHECK	EXAM.	ENG.
		CONSOLIDATED AIRCRAFT CORP. BUFFALO, N. Y.		NAME HOSE- FURNS. 3/16 I.D. FLEXIBLE							
		STAMP PT. No. WHERE SHOWN							SIZE D	OPP. HAND —	28F3100

SUPPLIES & EQUIPMENT CLASSIFICATION			
LET	ALTERATION	DATE	BY
A	TRACED	9-13-38	[redacted]

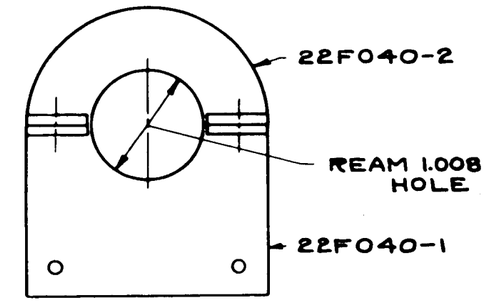

(-2) SUB-ASS'Y

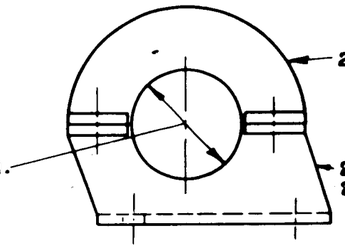

(-3) SUB-ASS'Y. L.H.
(-4) SUB-ASS'Y. R.H.

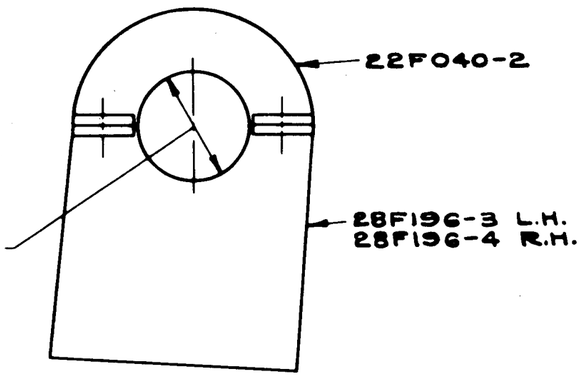

(-5) SUB-ASS'Y. L.H.
(-6) SUB-ASS'Y. R.H.

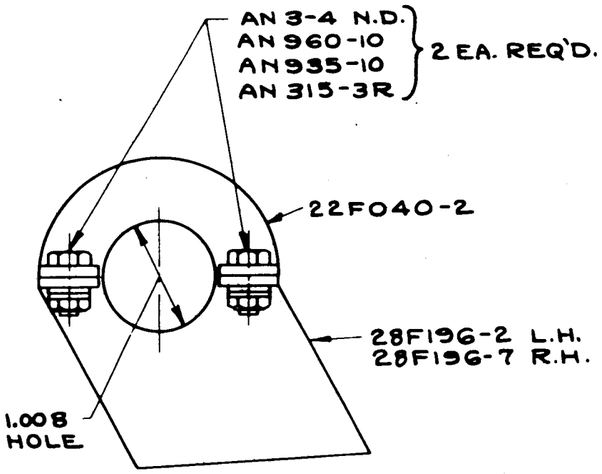

(-7) SUB-ASS'Y. L.H.
(-8) SUB-ASS'Y. R.H.

SEE RELEASE SHEET FOR PBY-5A/-5B.

-2,-5	→	28-5-MF	28F4003	
-2,-3,-5,-7	→	28-5-MF	28F4099	
-2,-4,-6,-8	→	28-5-MF	28F2022	
-2,-4,-6,-8	→	XPBY-5A	28F2022	
-2,-3,-5,-7	→	XPBY-5A	28F4099	
-2,-3,-5,-7	→	PBY-5	28F021-20	
-2,-4,-6,-8	→	PBY-5	28F2022	
-2,-4,-6,-8	→	PBY-4	28F2022	
-2,-3,-5,-7	→	PBY-4	28F021-20	
-2,-4,-6,-8	→	PBY-3	28F2022	
-2,-3,-5,-7	→	PBY-3	28F021-20	
-2,-4,-6,-8	→	PBY-2	28F2022	
-2,-3,-5,-7	→	PBY-2	28F021-20	
-2,-3,-4,-5,-6,-7,-8	→	PBY-1	28F021	

ST'D PARTS	LH REQ.	RH REQ.	PART NO.	SUB ASS'Y LH	SUB ASS'Y RH
AN315-3R	2				
AN935-10	2		22F040-2	1	
AN960-10	2		28F196-7	1	
AN 3-4 N.D.	2		28F3109-8	SUB ASS'Y	
AN315-3R	2				
AN935-10	2		22F040-2	1	
AN960-10	2		28F196-2	1	
AN 3-4 N.D.	2		28F3109-7	SUB ASS'Y	
AN315-3R	2				
AN935-10	2		22F040-2	1	
AN960-10	2		28F196-4	1	
AN 3-4 N.D.	2		28F3109-6	SUB ASS'Y	
AN315-3R	2				
AN935-10	2		22F040-2	1	
AN960-10	2		28F196-3	1	
AN 3-4 N.D.	2		28F3109-5	SUB ASS'Y	
AN315-3R	2				
AN935-10	2		22F040-2	1	
AN960-10	2		28F196-6	1	
AN 3-4 N.D.	2		28F3109-4	SUB ASS'Y	
AN315-3R	2				
AN935-10	2		22F040-2	1	
AN960-10	2		28F196-5	1	
AN 3-4 N.D.	2		28F3109-3	SUB ASS'Y	
AN315-3R	2				
AN935-10	2		22F040-2		
AN960-10	2		22F040-1		
AN 3-4 N.D.	2		28F3109-2	SUB ASS'Y	

REPLACES							
REPLACED BY							
LIMIT ON DIMENSIONS UNLESS OTHERWISE SPECIFIED ±							
APPROVED [redacted] 4-15-38 DATE							
CALC.WT.	ACT.WT.	O.H.	MODEL	NEXT ASSY.	REQ.	ST'D PARTS	LH REQ. / RH REQ. / PART NO. / SUB ASS'Y LH / SUB ASS'Y RH
SCALE 12"=1'-0"		REQUIREMENTS PER AIRPLANE				MAT.	PARTS LIST PER ASSY.
AC						4-20-38	CH.
NAVY						N.R. REQUIRED	INSPECT R.
MATERIAL		SPEC.	HEAT TREAT			FINISH	DRAFT / CHECK / ENGR. / ENG.

CONSOLIDATED AIRCRAFT CORP. BUFFALO, N.Y.
STAMP PT. No. WHERE SHOWN

NAME: BEARING ASS'Y.-FURNS. BUNK SUPPORT

OPP. HAND [illegible] B/M

SIZE D — 28F3109

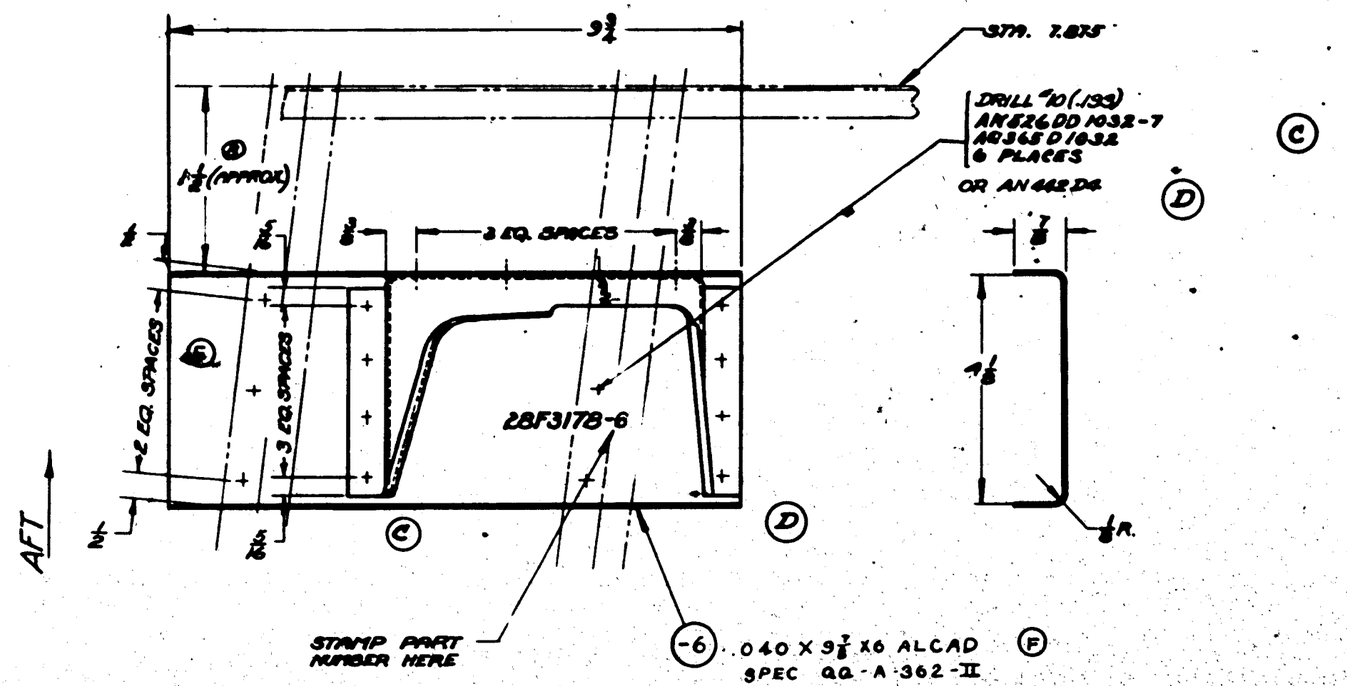

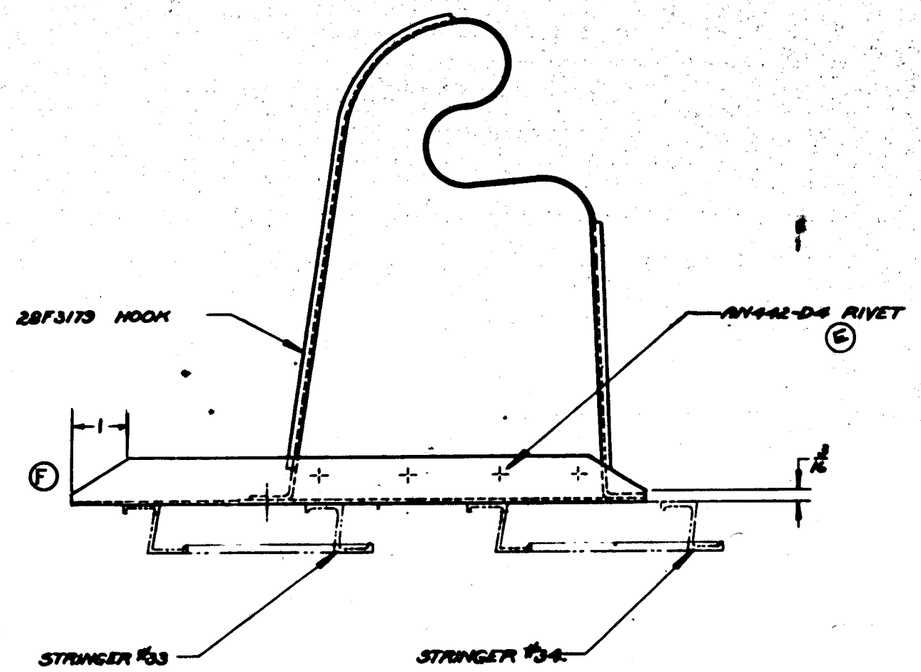

SUPPLIES & EQUIPMENT CLASSIFICATION			
LET	ALTERATION	DATE	BY
A	TRACED	4-5-38	Stacy
B	1 1/2 DIMENSION WAS 2 1/2	9-7-40	Blum
C	RIVETS (AN442-D4) REPLACED BY SCREWS (AN526DD1032-7) & NUTS (AN365D1032) IN SIX PLACES. 1/2 DIM. WAS 3/8. PART'S CHGE MADE ON FACE OF DW'G & ON B/M. PBY-5 PBY-5A OA-10	4-14-41	Cook
D	MOVED 28F3179 HOOK OUTBD. FLUSH WITH EDGE OF -6 ADDED NOTE "OR AN442D4"	5-22-42	Stacy
E	E.O.A5-2435 REMOVED NOTE "DRILL #30(.128) AT INSTALLATION." MARK 3 WAS M-111. NO WT. CHG.	8-22-42	Funk
F	DIM. 9 3/4 WAS 9; -6 WAS -2; NOTE 6 .040 X 9 7/8 X 6. ALCAD SPEC. QQ-A-362-II WAS (-2). 24ST (.040) AL. ALLOY SPEC. 4TA10 COND. T ALLOY 24T. WT. CHG. NEG	4-16-43	ADLING
			ADLING

NOTE:—
1. FINISH -6 WITH 2-P-18P BEFORE ASSEM. WITH 28F3179.
2. FINISH -6 & 28F3179 WITH 18R AFTER ASSEMBLY.
3. LOCATE PLATE & HOOK IN CONJUNCTION WITH 28F3176 LATCH INST. WITH GUN SPRUNG INTO STOWED POSITION.
4. EDGE DISTANCE FOR RIVETS: 5/16.

(E) MAKE INSTALLATION WITH .30 CAL. M-11 B.A.M. GUN & MARK 3 ADAPTER AND ACCESSORIES.

6P. GREEN PRIME FINISH COAT

O.H.	MODEL	NEXT ASSY.	REQ.	ST'D PARTS	LH REQ.	RH REQ.	PART NO.	LH REQ.	RH REQ.
	PBY-5B	28A1004	1						
	28-5AMN	28M0004	1						
-6	28-5AMC	28F6072	1				AN526DD1032-7	6	
-6	28-5MN	"	1				AC365D1032	6	
-6	28-5MC	28F6072	1				AN442-D4	AR	
	PBY-5A	28A1004	1						
	PBY-5	28A1004	1						
	PBY-4	28A1004					28F3179	1	
	PBY-3	28A1004					28F3178-6	1	

REQUIREMENTS PER AIRPLANE — MAT. — PARTS LIST PER ASSY.

A C			
NAVY NOTED	NOTED	NONE	NOTED
MATERIAL	SPEC.	HEAT TREAT	FINISH

DRAFT	CHECK	EXAM.	ENG.	
7-6-37	7-9-37			G.
				R.

28F3175 ON 5-7-37 REPLACES	APPROVED	DATE
REPLACED BY	.50 LBS. GALS. WT.	ACT. WT.
± 1/32 LIMIT ON DIMENSIONS UNLESS ± OTHERWISE INDICATED	6"=1'-0" SCALE	

CONSOLIDATED AIRCRAFT CORP. SAN DIEGO, CALIF.

NAME HOOK INST. — ARM. — TUNNEL GUN STOWAGE

OPP. HAND

DWG. D 28F3178

SUPPLIES & EQUIPMENT CLASSIFICATION			
LET	ALTERATION	DATE	BY
A	TRACED	3/13/39	

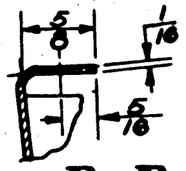

SECTION B-B

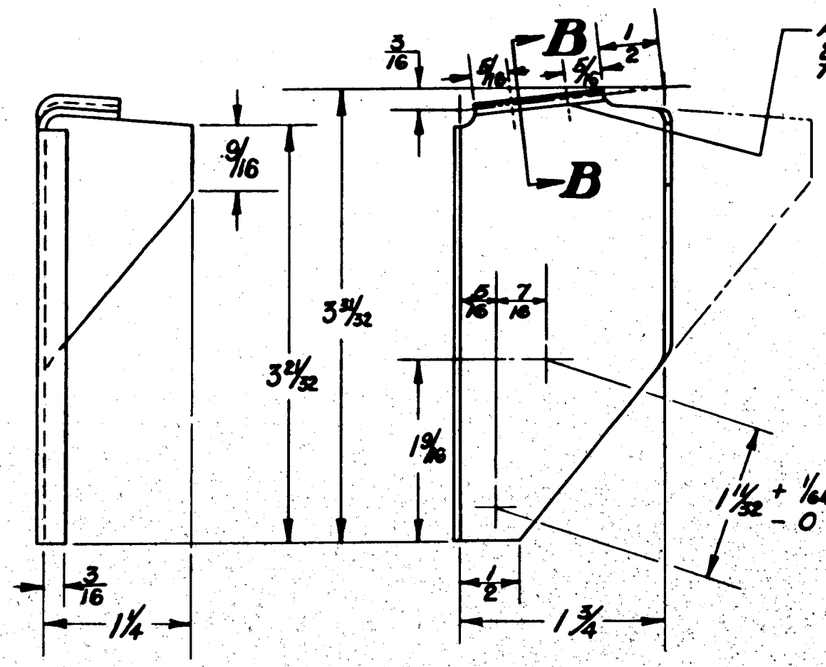

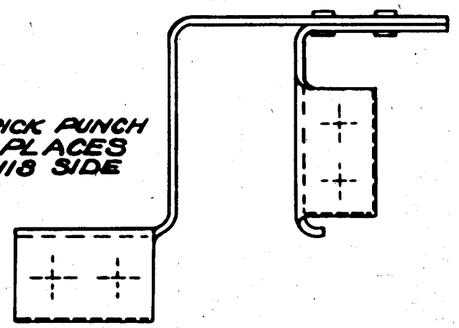

DETAIL-2
-3 OPP.

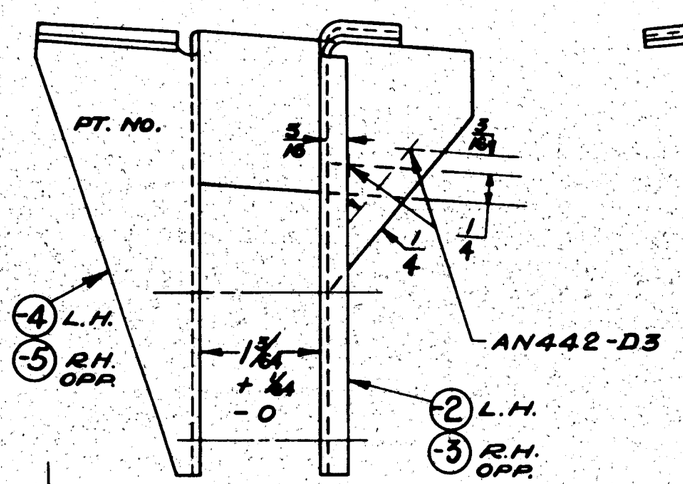

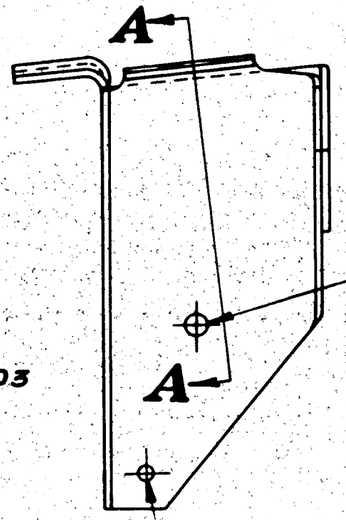

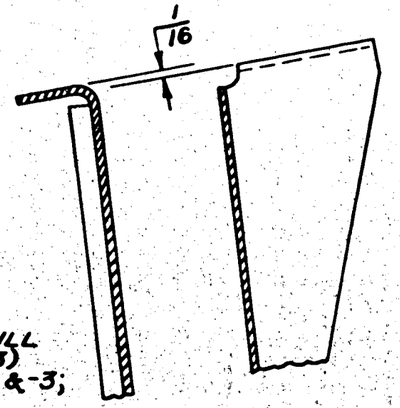

SECTION A-A

NOTE:-
1. ALL BEND RADII 1/8
2. ALL RELIEF RADII 1/8

GP-GREEN PRIME FINISH CODES

3	
P	
GP	
C	

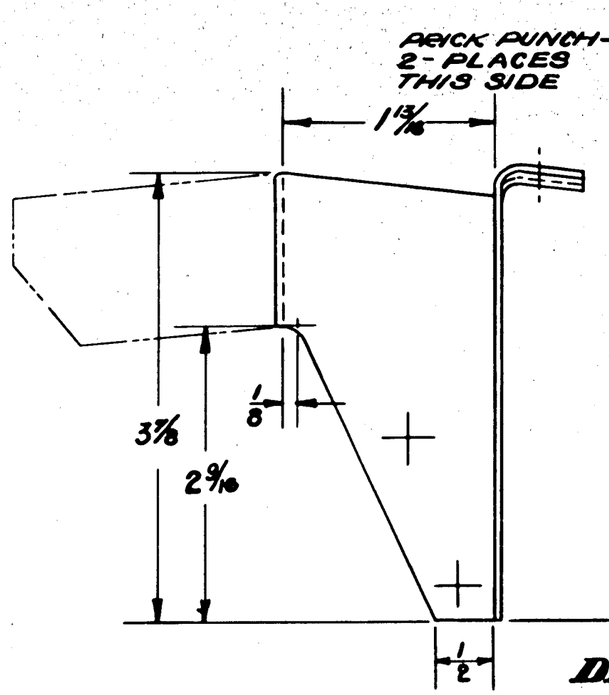

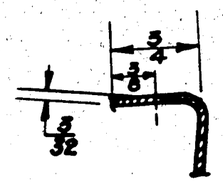

SECTION C-C

DETAIL-4
-5 OPP.

-4R	28-SACLOTC	28F4017	1 EA.										
-4R	28-STANDARD	28F4017	1 EA.										
-4R	PBY-5A	28F4017	1 EA.								-5		1
-4R	PBY-5	28F4017	1 EA.								-4	1	
-1	PBY-4	28F4017									-3		1
	PBY-4	28F4017		AN442-D3	2	2	28F4015-2			1			
					O.H.	MODEL	NEXT ASSY.	REQ.	STD PARTS	LH REQ.	RH REQ.	PART NO.	LH REQ.	RH REQ.
					REQUIREMENTS PER AIRPLANE				MAT.	PARTS LIST PER ASSY.				

REPLACES		APPROVED	Z.C.M. 5-23-39 DATE					
REPLACED BY		CALC.WT. .15	ACT.WT.	AC		GP		
LIMIT ON DIMENSIONS UNLESS OTHERWISE SPECIFIED ± 1/32		SCALE 12"=1'0"		NAVY .064 AL. ALLOY SHEET (2S-H38)	47A10 (CODE A)	3R-53	Z-P-2	
				MATERIAL	SPEC.	HEAT TREAT	FINISH	

12/16/37	1/5/38	Manuel		
Symmetry	Sheet No.	No. II.	R	
DRAFT	CHECK	EXAM.	ENG.	

CONSOLIDATED AIRCRAFT CORP. BUFFALO, N.Y.

STAMP PT. No. WHERE SHOWN

NAME BRACKET-ARM T-BOMB RELEASE PULLEY-BLKHD. #4 UPPER

OPP. HAND 28F4015-1

SIZE D

DWG. 28F4016

SUPPLIES & EQUIPMENT CLASSIFICATION			
LET	ALTERATION	DATE	BY
A	TRACED	1-8-37	[illegible]
B N	ADDED TO FACE OF DWG & B/M-	4-30-41	SALS
	AC526D1032-B, AC365D1032, &		
	AN960D10. AN526DD832-T &		
	AC365D832 WAS AN442D4		

E.O. 3864 % A
PBY-5, 5A
28-5MC, MN, & MMC
OA-10

BULKHD #4 (REF.)

DECK LINE (REF.)

5 7/16 (REF.)

68°30' (REF.)

REINF. PLATE (REF.)

STRINGER (REF.)
28B1000-406 L.H.
28B1000-309 R.H.

SKIN (REF.)

STRINGER (REF.)
28B1000-406 L.H.
28B1000-309 R.H.

(B) AC526D1032-B
AC365D1032
AN960D10

BRACKET
28F4016 L.H.
28F4016 R.H.

(B) AN526DD832-T
AC365D832

AN3-14 BOLT
AN310-3 NUT
AN380-2-2 COTTER.

FWD

3 15/16

Q610-06-2.5 SPACER.

AN392-3T PIN
AN380-2-2 COTTER

TO R. SHIP

18 9/16 (REF.)

AN210-2A
LIGHT DUTY PULLEY

PORT SIDE SHOWN

						AC526D1032-B	2	2	(B)	
L&R	OA-10	28A1015	1			AC365D1032	2	2	(B)	
L&R	28-5AMC	28A1015	1			AN960D10	2	2		
					LIGHT DUTY	AN210-2A	3	3	Q610-06-2.5	R R
L&R	28-5MC	28A1015	1			AN392-3T	1	1		
L&R	28-5MN	28A1015	1			AN380-2-2	2	2		
L&R	PBY-5A	28A1015	1			AN3-5	1	1		
L&R	PBY-5	28A1015	1			AN3-14	1	1	28F4016-1	1
-/	PBY-4	28A1015		(B)		AN526DD832-T	6	6	28F4016	1
-/	PBY-4	28A1015				AC365D832	6	6		
							LH	RH		LH RH
					ST'D PARTS		REQ.		PART NO.	REQ.

L&R	OA-10	28A1015	1	AC526D1032-B	2	2	(B)				
L&R	28-5AMC	28A1015	1	AC365D1032	2	2	(B)				
				AN960D10	2	2					
				LIGHT DUTY AN210-2A	3	3	Q610-06-2.5	R	R		
L&R	28-5MC	28A1015	1	AN392-3T	1	1					
L&R	28-5MN	28A1015	1	AN380-2-2	2	2					
L&R	PBY-5A	28A1015	1	AN3-5	1	1					
L&R	PBY-5	28A1015	1	AN3-14	1	1	28F4016-1			1	
-/	PBY-4	28A1015		AN526DD832-T	6	6	28F4016		1		
-/	PBY-4	28A1015		AC365D832	6	6					
					LH	RH			LH	RH	
	ST'D PARTS				REQ.		PART NO.		REQ.	

SUPPLIES & EQUIPMENT CLASSIFICATION			
LET	ALTERATION	DATE	BY
A	TRACED	7-7-39	[illegible]
B	TRIMMED OFF CORNERS, ADDING 1½, 5/8, & 3/4 DIMS. NEG. WT. CHG.	9-19-42	HMIT

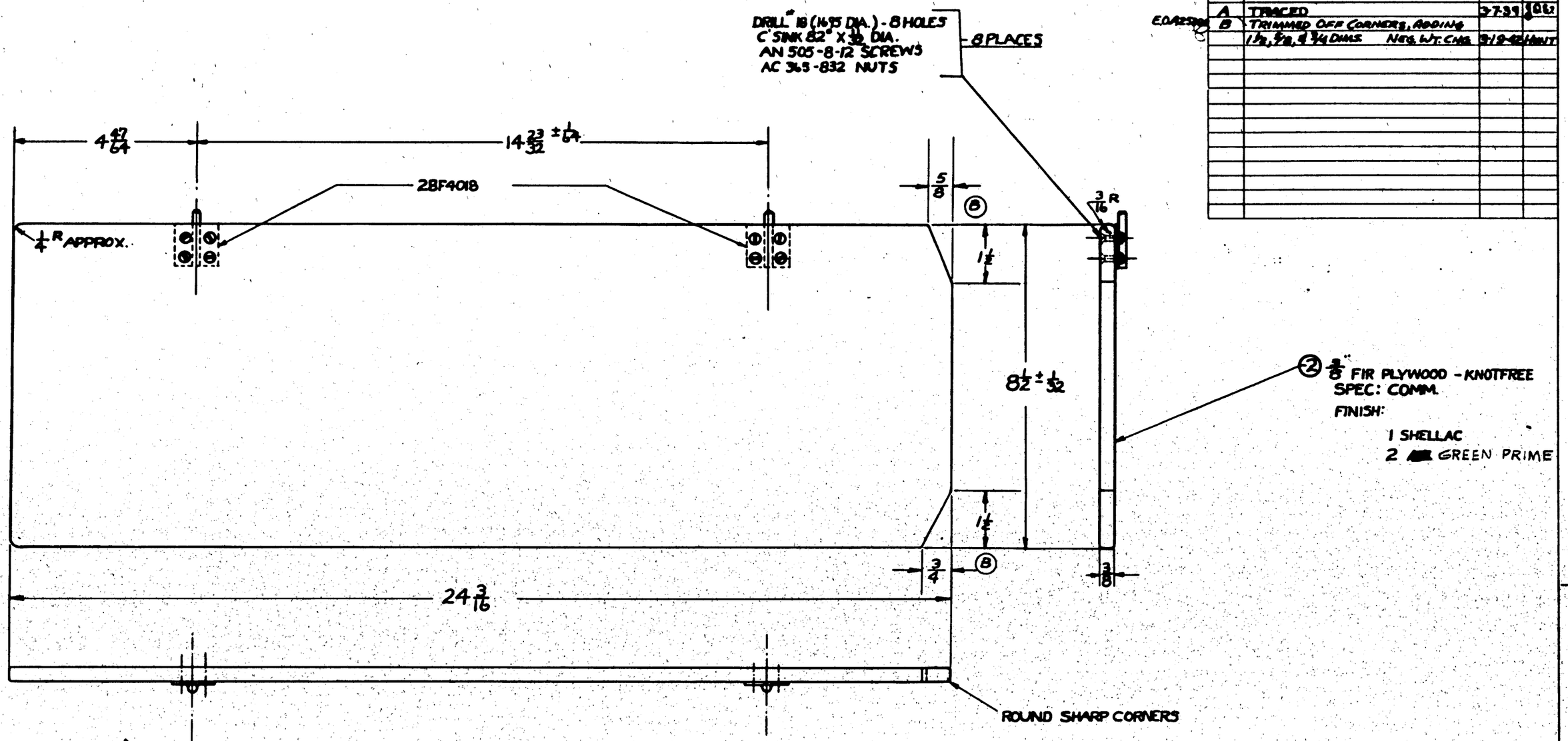

O.H.	MODEL	NEXT ASSY.	QTY.	ST'D PARTS	REQ. LH	REQ. RH	PART NO.	REQ. LH	REQ. RH
	PBY-5A	28F3069	1				28F4018	2	
	PBY-5	28F3069	1						
	28-5AMN	28F3069	1						
	28-5MN	28F3069	1	AC365832	8				
	PBY-4	28F3069-40		AN505-8-12	8		28F4019-2	1	

REPLACES

REPLACED BY

LIMIT ON DIMENSIONS UNLESS OTHERWISE SPECIFIED ± 1/32

[redacted]

APPROVED [redacted] DATE 4-21-39

CALC. WT. 143 ACT. WT.

SCALE 6" = 1'-0"

AC

NAVY NOTED — MATERIAL

REQUIREMENTS PER AIRPLANE: NOTED — SPEC. | NONE — HEAT TREAT | MAT.: NOTED — FINISH

PARTS LIST PER ASSY.

DRAWN	WRITTEN	CK.			
4-38	1-7-38	[illegible]			JE
DRAFT	CHECK	EXAM.	ENG.		

CONSOLIDATED AIRCRAFT CORP. BUFFALO, N. Y.

STAMP FT. No. WHERE SHOWN

NAME SHELF ASS'Y - FURN. - FOOD LOCKER

OPP. HAND

SIZE D

28F4019

BRUNING-HOFFMAN CO., INC. BUFFALO
IMPERIAL TRACING CLOTH

SUPPLIES & EQUIPMENT CLASSIFICATION			
LET	ALTERATION	DATE	BY
A	TRACED	2-28-38	[illegible]
B	Chgd mat'l from "AIR FROM SUPPLY" TO "ROUND HAIR"; SPEC FROM COMM TO A.C. 16122, REVISED LIGHTENING HOLES & NOTES "MAY ---- ERWIN & LAYOUT ------ PRACTICE." McGee Nov.	5-23-38	[illegible]

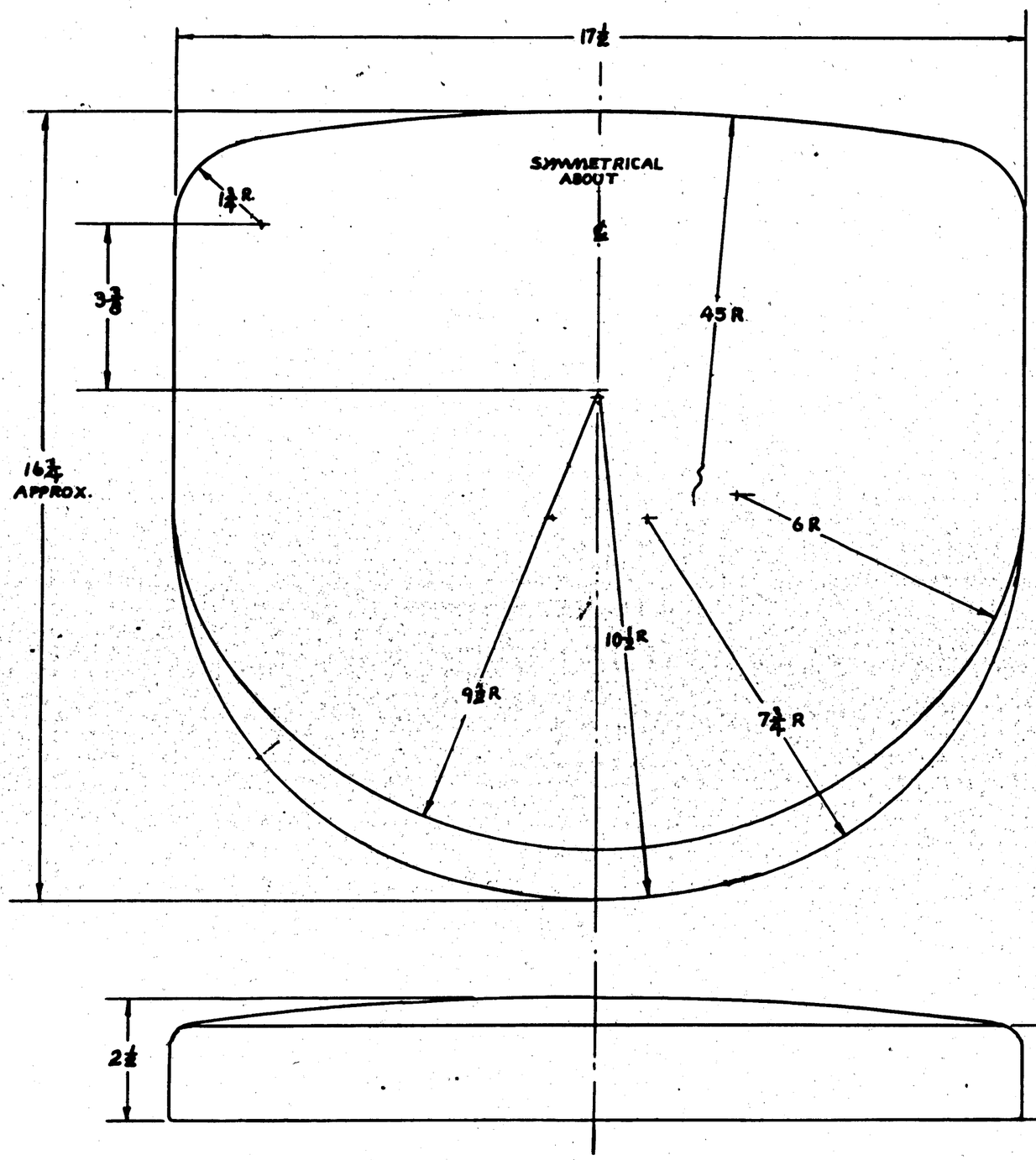

Ⓑ

Ⓑ

PBZY-3	28F4048	2	
XPBZY-3	28F4048	3	
PBZY-2	28F4048	3	
28-5AMN	28F4048	2	
28-5AMC	28F4048	2	
28-5MGMN	28F4048	2EA	
28-5MGMC	28F4048	2EA	
PBY6A5B	28F4048	2EA	
PBY-5	28F4048	2	
PBY-5	28F4048	4	
"24		3	
X"24		3	
PBY-4	28F4048		

SHIP #29 & ON
SHIP #1-24

REPLACES													
REPLACED BY													
LIMIT ON DIMENSIONS UNLESS OTHERWISE SPECIFIED ± [redacted]													
APPROVED 2-24-38 DATE													
CALC.WT. 2.80	ACT.WT.	O.H.	MODEL	NEXT ASSY.	REQ.	ST'D PARTS	LH REQ.	RH REQ.	PART NO.	LH REQ.	RH REQ.		
SCALE 6"=1'-0"		REQUIREMENTS PER AIRPLANE				MAT.	PARTS LIST PER ASSY.						
AC													
NAVY Round Hair		AC 16122		—		—							
MATERIAL		SPEC.		HEAT TREAT		FINISH	DRAFT	CHECK	EXAM.	ENG.			
							5-23-38						

CONSOLIDATED AIRCRAFT CORP. BUFFALO, N. Y.

STAMP PT. No. WHERE SHOWN

NAME SEAT CUSHION - FURN NAV. & RADIO OPERATOR

OPP. HAND

SIZE D

28F4041

SUPPLIES & EQUIPMENT CLASSIFICATION			
LET	ALTERATION	DATE	BY
E	TRACED	11-27-39	Simmons
F	ADDED TO FACE OF DWG. "GRIND O.D. TO 1.750 +.002 -.000"	8-13-41	WHITE
G	TO REQ./AIRPLANE BLOCK LIMITED		
	PBY-5A UP TO MCR 2218-6, NO WT. CHG.	6-7-43	W. Wynne

E.O.C. 6751 PBY-5 28-5

MCR 221-8-6

28F2182-2

28F9059

28F095-3

DRILL #10 (.1935) ON ASSEMBLEY

AN300-21A AC365-D1032

28F2227

28F096-3 Q7032-105-.125

AN300-20A AC365-D1032

28F2233

28F2182-6

18 7/8

23 1/8

35 3/8

1 3/4 O.D. x .058 CHROME MOLY TUBE - 2 3/8 LONG SPEC. 94T18 FINISH C.P. 2GP ON ASSEM. GRIND O.D. TO 1.750 +.002 -.000

(F)

-2

28F2182-4

AN300-22A AC365-D1032

28F2229

AN442-D8 7 PLACES

TUBE TO BE FLUSH WITH BOTTOM OF CASTING 28F096-3

NOTES:

GREASE SWIVEL JOINTS WITH PARKER "ANTI-SEIZE" COMPOUND OR EQUIV.

GP-GREEN PRIME FINISH CODE

Z	ANODIC TREATMENT
P	P-27 PRIMER
AP	ALUMINIZED PRIMER
C	CADMIUM PLATE

℄ AIRPLANE

B.P. 5.33

18 1/2 (REF.)

28F9059 (REF.)

AN960-D416

AN380-2-2 COTTER

AN 51506-7
AN935-6
AN960D6

28F9053

28F9052

-2 (REF.)

33°

28F2182-2 (REF.)

28F096-3 (REF.)

N5C004

REAM 1/4" (.250) 2 HOLES THRU. -2 & 28F2182-2. HOLES MUST BE IN LINE WITH HOLE IN 28F9059 TO INSURE ENGAGEMENT OF PIN. ELONGATE HOLES 1/16" DOWNWARD

VIEW B-B

SHOWING LOCKING ARRANGEMENT AND LOCATIONS OF LOCKING HOLES IN TUBE.

45° 45°

AN492-D5 8 PLACES

VIEW A-A

28F096-3 (REF.) LOWER FITTING SHOWING RELATIVE POSITION OF FITTING TO LOCKING HOLES.

										10 PARK-1005-HEX	1	
										N5C004	1	
										28F9059	1	
										28F9053	1	
										28F9052	1	
										28F2233	1	
									AN300-20A	1	28F2229	1
									AN300-22A	1	28F2227	1
									AN300-21A	1	28F2182-6	1
								UP TO MCR 2218-6			-4	1
		PBY-5A	28F2174	1					AN456-8D5K	4	28F2182-2	1
		PBY-5B	28F2179	1					AN456-8D6	4	28F096-3	1
		PBY-5	28F2174	/EA					AN456-6	4	28F095-3	1
	-2	PBY-2	28F2157	1					AN456-10D-7	4	28F9059-2	1
		PBY-4	28F2179						AN456-8D8K	3	28F9055-2	1
	O.H.	MODEL	NEXT ASSY.	REQ.				ST'D PARTS		LH REQ.	PART NO.	LH REQ. RH REQ.

REPLACES ADAPTABLE FOR PBY-4

REPLACED BY 28F2395 FOR PBY-5A AND 5B

LIMIT ON DIMENSIONS UNLESS OTHERWISE SPECIFIED ± 1/64

APPROVED DATE 8.30

CALC. WT. ACT. WT.

SCALE 12 "=1'-0"

REQUIREMENTS PER AIRPLANE | MAT. | PARTS LIST PER ASSY.

AC

NAVY NOTED | NOTED | NOTED | NOTED | 7-29-39 | Simms | . | PARKER | E

MATERIAL | SPEC. | HEAT TREAT | FINISH | DRAFT | CHECK | EXAM. | ENG.

CONSOLIDATED AIRCRAFT CORP. BUFFALO, N. Y.

STAMP PT. No. WHERE SHOWN

NAME SUPPORT-FURN.-NAV'S. TABLE & SEAT

OPP. HAND

DWG. SIZE D

28F9055

R

28F9055

LET	ALTERATION	DATE	BY
F	IN BILL ADDED "Q1601-15L" & Q1601-16 & "Q1601-22 AT AC225-2, AC225-3, Q1601-15L, Q1601-16, Q1601-22, ADDED "SEE NOTE" ON FACE, RE-PLACED CALLOUT AC225-2, AC225-3 WITH NOTE: "Q1601-15L & Q1601-16, OR AC225-3, Q1601-22, OR AC225-2." PER ECN		

A	ADDED FRONTAL & BASE		
B	ADDED ARM-E ASSY		
	CHANGE DIMS AT STA 6.2		
C	CREATED -4 & -5 ASSY.		
	REMOVED -55 ASSY.		
	ADDED STOCK SIZE -2,-3,-4		
D	CHG'D -2,-3 & -4 MATL FROM 20 OZ. WATERPROOF KHAKI DUCK TO 8 OZ. WATERPROOF KHAKI DUCK. WT. CHG NEG.		
E	CHG'D MATERIAL FOR -2,-3 & -4 FROM "8 OZ. WATERPROOF KAKI DUCK" TO "8 OZ. DUCK NAVY SPEC. C.A.C. FAB. #G-50" WT. CHG. NEG.		

STA. 6.2

Ø7008-MN-.063 (BRONZE) OR ACCESS-12 OR ACCESS-13 OR ACCESS-8 (F)
AC 365-F832
AN 960-D8
4 PLACES
LOCATE STUDS ON INSTALL.

28B2845-3 (REF.) (C)
28B5739-15L FOR -55 (REF)

28B2844 (REF.) (C)
28B3139-8 PART -55 (REF)

Q5746-K1-8
SEW TO BACK OF POCKET AS SHOWN

Q5706-K1-3
SEW TO FRONT OF POCKET AS SHOWN

12 FOR -0
11⅞ FOR -55. (C)

20 FOR -0
19¾ FOR -55 (C)

28B4137 (REF.)
28B5137 PART -55 (REF) (C)

SEA ANCHOR 1/2
STOWAGE
(A)

PAINT "SEA ANCHOR STOWAGE" IN BLACK LETTERS ON FRONT OF BAG, AS SHOWN

19¾

(NOTE: -55 FOR SHIPS 7-24) (C)

28B1600-72 (REF.)
(C) -4 STOWAGE BAG SAME AS -3 ASSY EXCEPT FOR STENCILING "SEA ANCHOR STOWAGE" WHICH IS "DRYP ANKER"

-2 STOWAGE BAG
8OZ. DUCK NAVY SPEC. (E)
(D) SPEC. 24D4 C.A.C. FAB. #G-50

SEW SEAMS IN ACCORDANCE WITH SPEC. 49C8

-3 (D) STOWAGE BAG
8OZ. DUCK NAVY SPEC. (E)
SPEC. 24D4 C.A.C. FAB. #G-50.
USED ON -55 ASSY. ONLY
(C)

MTL NOTE:
(G) STOCK SIZE -2,-3,-4 — 24 x 19

SHIPS # 29-31 ONLY (1291-1293)

	AN960-D8	AC365-F832	AC225-8	AC225-2	Q1601-22	Q1601-16	Q1601-15L	Ø7008-MN-.063	Q5746-K1-8	Q5706-K1-3	-4	-3	-2
SEE NOTE	4	4	4	4	4	4	4	4	2	2			
-4													
-3											1	1	
-2													1

SEQ. ASSY. NO.	MODEL	NEXT ASSY.	REQ.	ST'D PARTS LIST	LIST REQ.	PART NO.	-0 REQ.	-55 REQ.	-56 REQ.
-55	28-SAME	28F5302	1						
-56	28-SAME	28F5302	1						
-4	28-SAME	28F5186	1						
-55	PART-2	28F5032	1						
-4	28-SAME	28F5186-55	1						
-56	28-SAME	28F6145	1						
-55	28-SAME	28F6145	1						
	PART-4	28F5022	1						

REQUIREMENTS PER AIRPLANE | MAT. | PARTS LIST PER ASSY. | -0 | -55 | -56

A.C.				
NAVY NOTED	NOTED	NONE	NONE	
MATERIAL	SPEC.	HEAT TREAT	FINISH	

28F2274 for REPLACED sheet metal
APPROVED 4-12-46 DATE
REPLACED BY
GRO. WT. | ACT. WT.
1/16
6" = 1'-0"

FORWARD

VIEW LOOKING OUTBOARD FROM ℄ SHIP 1-24
PORT SIDE

SECTION A-A

-2	PART-2A	28F5185	1
-3	PART-3	28F5186	1
	ASSEM.	NEXT ASSY	QUAN.

33 SHIPS
MK. 23E

CONSOLIDATED AIRCRAFT CORP. SAN DIEGO, CALIF.

INST. - FURN. - SEA ANCHOR STOWAGE BAG

QTY. MADE
SIZE D
28F4085

LTR	REVISIONS	DATE	BY
A	ADDED PBY-5 PARTS		
	ADDED -56 ASSEM. FOR 28-5MF PARTS		
B	AN515-D8-8 W/AS	7-15-42	
	AN515-D8-6		
C	Q5746-K1-25 1-S Q5746-K1-19		
D	REVISED -56 ASS'Y PER E.O. 32		
E	ADD. -57 ASS'Y (28-5MF) E.O. 16825		
F	ADD. -58 ASS'Y. (28-5MF) E.O. A8213		
G	ADDED REQ. FOR 5A & 8A-7B.		
H	ADDED REQ. PER [illegible]		
	ADD. -0 -57 ASS'Y.	10-22-41	
J	ADDED LIFE RAFT ANTI-ABRASION STRIPS	9-12-42	
K	ADDED PLAN VIEW - PORT SIDE FOR -59 ASS'Y ONLY (-59 ABS)		
	NO WT. CHG.	10-8-42	

(J) NOTE: INSTALL ON THE PORT SIDE OF AIRPLANE SYMMETRICAL TO THE VIEW SHOWN FOR PBY-5A SHIPS # 2486, 2487 & 2488

** 7-MAN LIFE RAFT

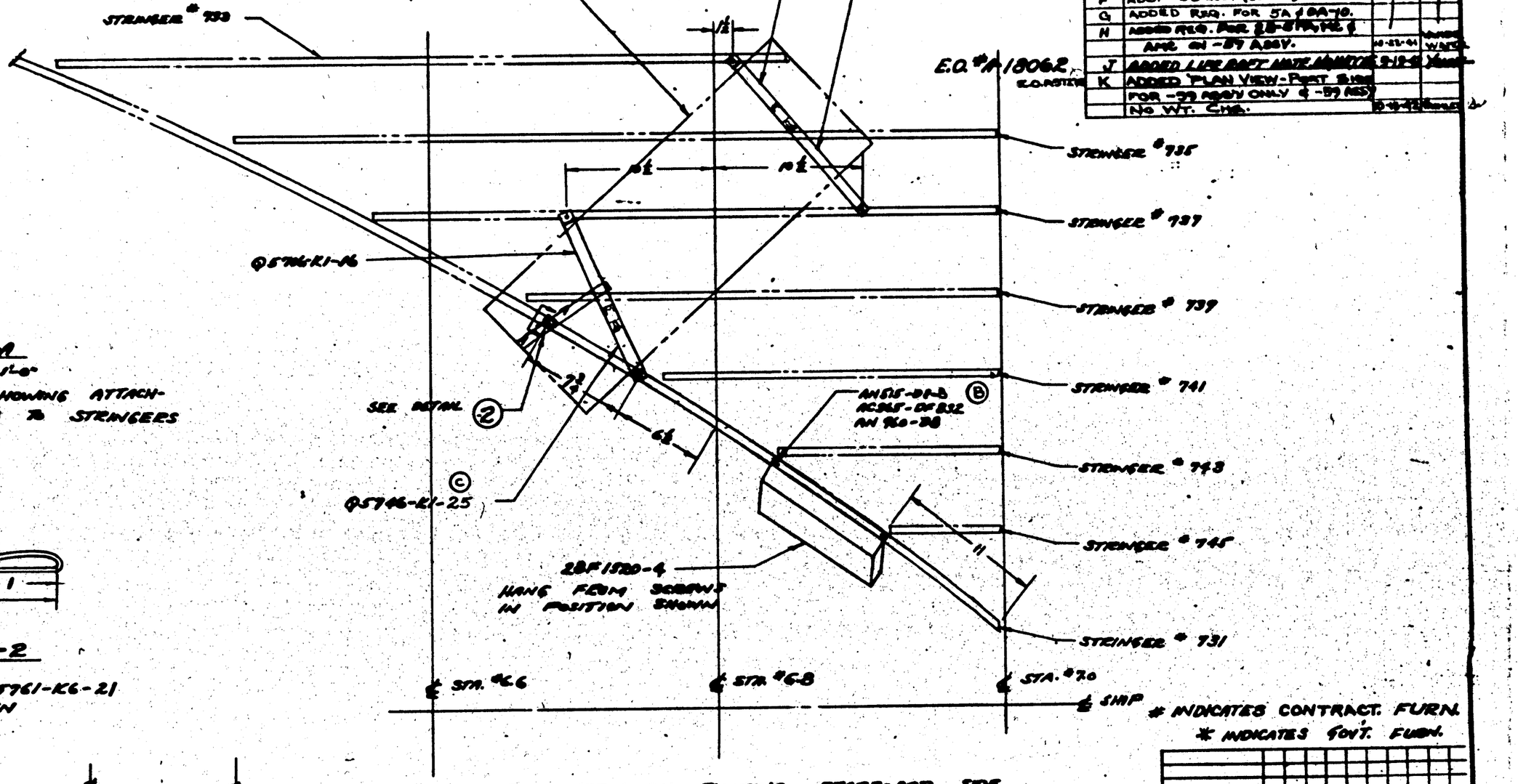

(B) Q5799-6
AN515-D8-8
AC565-D8832

SECTION A-A
SCALE 12" = 1'-0"

TYPICAL SECTION, SHOWING ATTACHMENT OF STRAPS TO STRINGERS

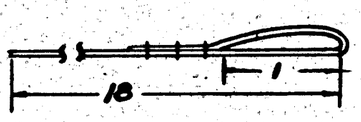

DETAIL OF -2

MAKE FROM Q5761-K6-21
SEW AS SHOWN

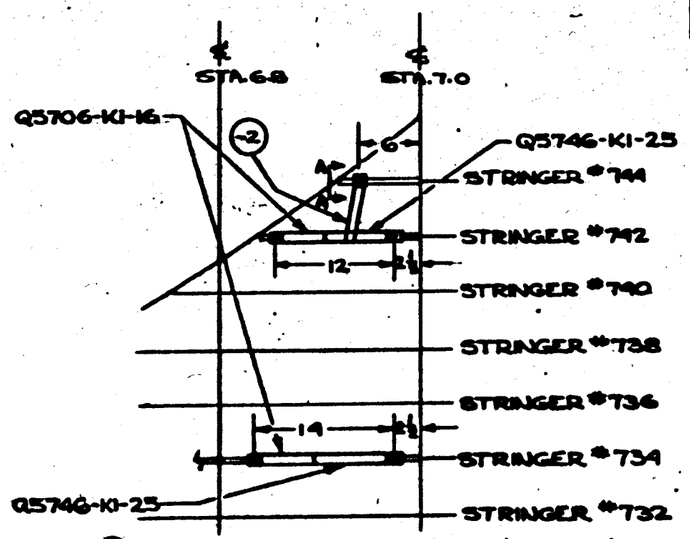

(K) PLAN VIEW - PORT SIDE (-59 ASSY ONLY)
SCALE - 1" = 1'-0"

PLAN VIEW OF FLOORING - STARBOARD SIDE
FOR -0, -57, & -58 ASSYS ONLY

SHIPS # 2481-2488 ONLY - PBY-4

| | | |

LTR	ALTERATION	DATE	BY
A	AN RIVET, 5/32 DIA. ALUM. - 3 R 2 - 3 FOR AN FLUSH HEAD RIVET AN 426 - 3 - 6 ——— ADDED WAS AN 426 - 3 - 5 REVISED REF. AN 425 - 3 - 12 AN RIVET, 12 SHANK WAS 12		
B	22 G 119 - 2 WAS 22 G 119		
C	STOCK FOR -7, -8 & -9 (SHEET 1 ONLY) WAS AN 931 - 0 - 18, 0.063 WAS 0.		

PREV. USED ON -3 ASSY.
R.D.C. 9018
GA-10

PREV. USED ON -3, -5 ASSY.
GA-10, R.D.C. 4065

ALL INSIDE BEND RADII 3/32
EXCEPT AS NOTED

SECTION **B-B**
SCALE 12"=1'0"

SECTION **A-A**
SCALE 12"=1'0"

NOTE: -8 TO BE RIVETED & SPOTWELDED TO FOOD LOCKER AS SHOWN ON 28F4123 (REF)

NOTE: FLANGES TO BE TURNED OVER FOR ENTIRE LENGTH EXCEPT AT CORNERS.

FINISH
GP- GREEN PRIME

22G119 2 CATCH - INSOLATE WITH AN425D6 AN960D10 NEOPRENE OR PAN TAPE 28F3067-2

3R APPROX.

DRILL #30 (128) 3 HOLES

AN442D4 - 5 PLACES
SPOTWELD 1" O.C. BETWEEN RIVETS

SECTION **C-C**
SCALE 12"=1'0"
TYPICAL OF ALL CORNERS

NOTE: 2-P AFTER ASSEM OF -7, -8 & -9 AND BEFORE ASSEM OF 22G119-2 AFTER GP ASSEMBLY OF 22G119

28F3067-2			1
22G113-2	WELDMENT STR. CONN.		2
-2	3/8 HOLE	MAKE FROM AN 251-4-[illegible]	1
-3	3/8 HOLE		1
-4	PLUG		1

ASSY DASH NO.	MODEL	NEXT ASSY.	QTY
	28-5 ARMN	28F4123	1
	P6X-5A	28F4123	1
	28-5AMC	28F4123	1
	XP6Y-5A	28F4123	1

REQUIREMENTS PER AIRPLANE

REPLACES — GALLEY WT.
REPLACED BY — ASSY. WT.

LIST OF DIMENSIONS UNLESS OTHERWISE SHOWN ± 1/32
SCALE 6"=1'0" & NOTED
STAMP PART NUMBER UNDER SHOWN

PART NO.	STOCK	MATERIAL	SPEC.	LH REQ.	RH REQ.	LH REQ.	RH REQ.	LH REQ.	RH REQ.	LH REQ.	RH REQ.	LH REQ.	RH REQ.
PARTS LIST PER ASSY.				-0		-2		-3		-4		-5	

A C
NAVY NOTED
HEAT TREAT
NOTED
FINISH

DRAFT	CHECK	STRUCT.	MAT.	SPEC.	ENG.
7/18/39		JFK 7-19-39			R

NAME DOOR ASSY-FURN.- FOOD LOCKER
CONSOLIDATED AIRCRAFT CORP. San Diego, Calif.

OPP. HAND NONE
SIZE D
28F4125

LET	ALTERATION	DATE	BY
A	CHANGED ARMAMENT HOLE TO 2 1/2 FROM END		

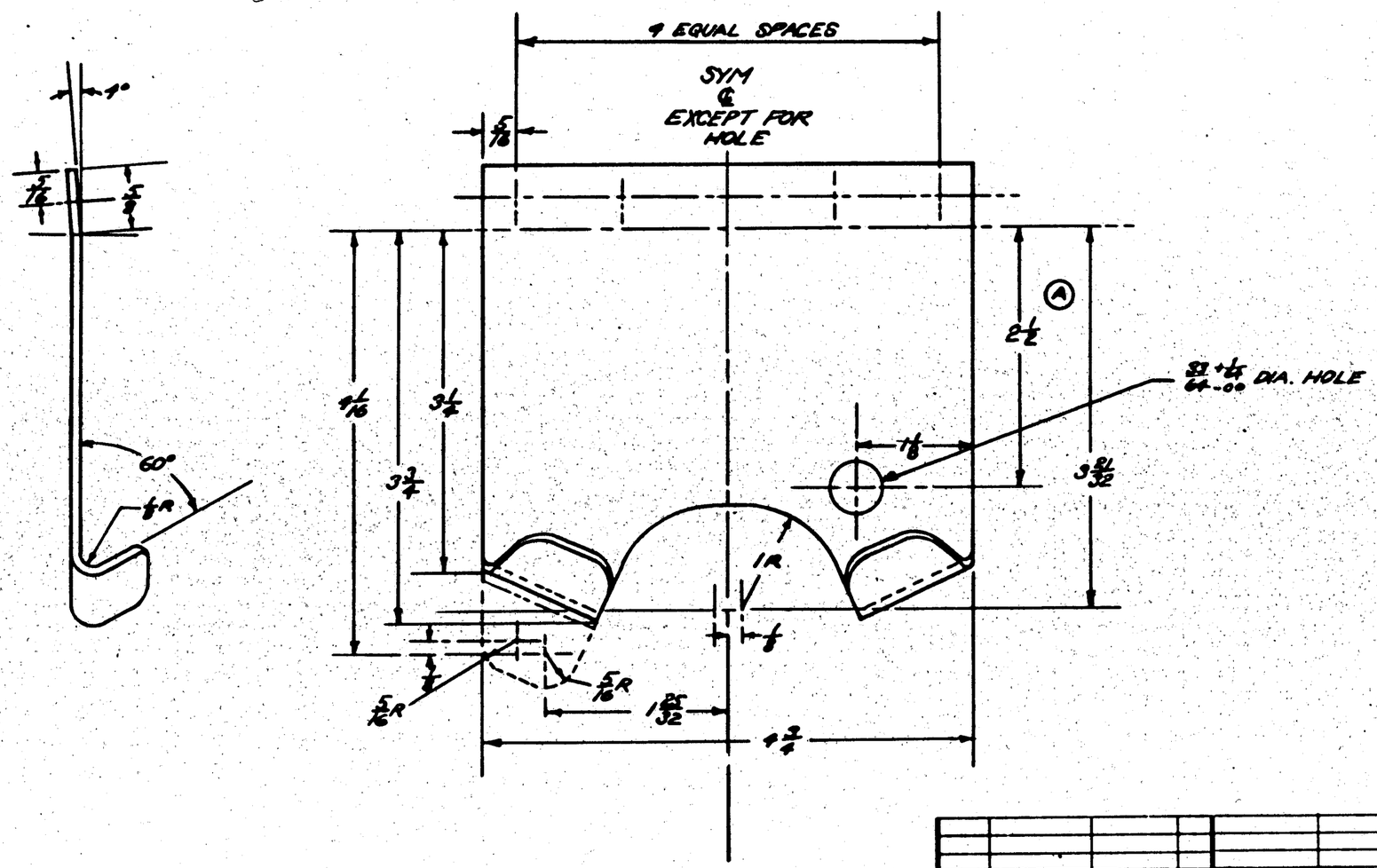

FINISH CODE	
Z	ANODIC TREATMENT
P	P-27 PRIMER
AP	ALUMINIZED PRIMER
C	CADMIUM PLATE

GP-GREEN PRIME

PBY-5A 28F4006 1
XPBY-5A 28F4006

ASSY. DASH NO.	MODEL	NEXT ASSY.	NOS

REQUIREMENTS PER AIRPLANE

REPLACES — CALC WT.

REPLACED BY — ACT. WT.

LIMIT OF DIMENSIONS UNLESS OTHERWISE SPECIFIED: ± 1/64 — SCALE 12" = 1'-0"

STAMP PART NUMBER WHERE SHOWN

28F4139 -0 091 SHEET AL ALCLAD 24S-T4 1

PART NO.	STOCK	MATERIAL	SPEC.	LH REQ.	RH REQ.	LH REQ.	RH REQ.	LH REQ.	RH REQ.	LH REQ.	RH REQ.	LH REQ.	RH REQ.
PARTS LIST PER ASSY.				-0		-2		-3		-4		-5	

A C
NAVY SR-53 HEAT TREAT
Z-P-2AC GP FINISH
P-27-M

DRAFT: [illegible] CHECK: [illegible] STRUCT: [illegible] STAT: [illegible] APPROV: [illegible] ENG: [illegible]

NAME HOOK ARMAMENT-BOW GUN STOWAGE LATCH

OPP. HAND —

CONSOLIDATED AIRCRAFT CORP. SAN DIEGO, CALIF.

SIZE D

28F4139

REV

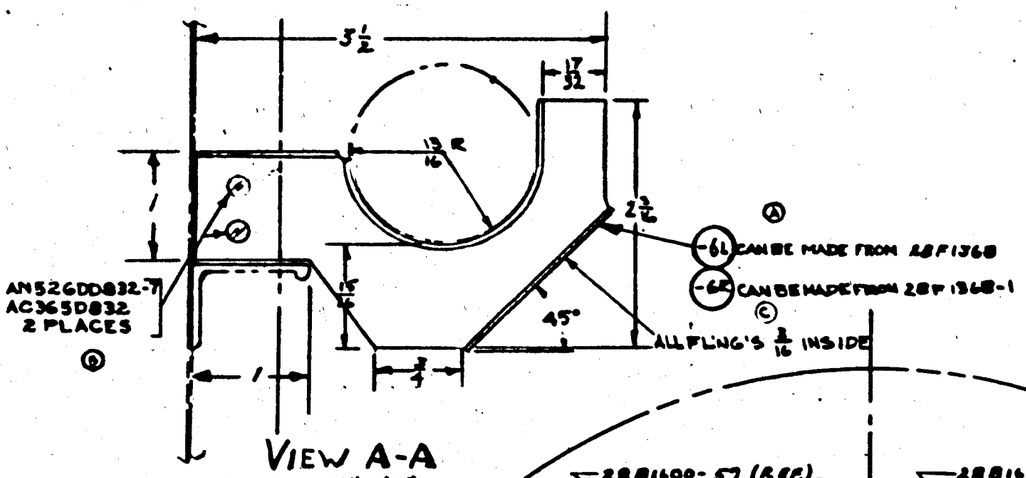

VIEW A-A
SCALE 12"=1'-0"

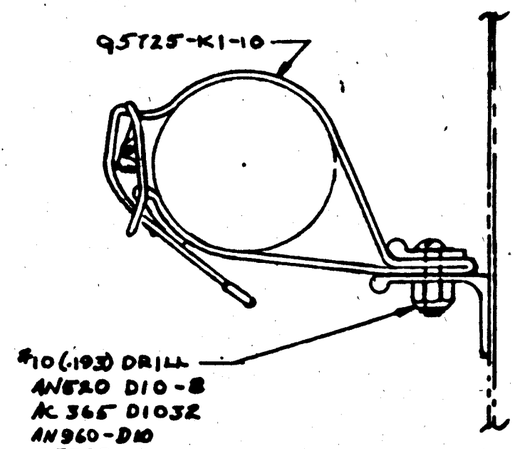

VIEW B-B
SCALE 12"=1'-0"

LEV	ALTERATION	DATE	BY
A	"6½ CAN BE MADE FROM .040 ALCLAD 24S-T3 SHEET	4/10/41	
	"6½ MAKE FROM .040 ALCLAD 24S-T3 CAN BE MADE FROM .040 ALCLAD 24S-T3 WAS -T3 SHEET		
	FROM .040 ALCLAD 24S-T3 CANCELLED PER E.O. 38146		
B½	CHG'D FROM RIVETS TO AN526 SCREWS & AN365 SPACER (MAT'L AS REQ'D) AT FWD FACE OF BULKHD AND ADDED TO B½		
C	CHG'D -7½ TO -6½ ON PLACE	4/21/41	K
	-6½ BRK'G AND B½. ADDED		
	MATERIAL FOR -7½ TO B½. ADDED PLUG. 2½, 3½, 7½, 8½		
	REMOVED PLUG AND AE" TO VIEW A-A		
D	ADDED 28-5AMN REF'S. TO B½	9/21/41	K

© *MATERIAL FOR -6½:
.040 AL ALL 2450 47A10
.040 = 2¾ = 4

RELEASE FOR SHIPS
98 TO 200 INC

REPLACES	APPROVED	DATE
REPLACED BY	CALC. WT.	ACT. WT.
½ ±	1"=1'-0" SCALE UNLESS NOTED	

G.N.	MODEL	HEIGHT ASSY.	REQ.	GP'S PARTS	LH	RH	PART NO.
	28-5AMN	28F6005	1	AN526DD832	4		Q5799-5
	28-5AMC	28F6005	1	AC365D832	4		Q5725-K1-10
				AN960-D10	2		
	PBY-5A	28F6002	1	AN520 D10-8	2		
	PBY-5	28F1002	1				-6½
	PBY-5A	28F1002	1	AC365D1032	2		-6½

REQUIREMENTS PER AIRPLANE — MAT. — PARTS LIST PER ASSY.

AC				
NAVY* NOTED	NOTED	NONE	NONE	
MATERIAL	SPEC.	HEAT TREAT	FINISH	

CONSOLIDATED AIRCRAFT CORP. SAN DIEGO, CALIF.

BOAT HOOK INSTALL.- FURNS - STOWAGE

GP. NO. D 28F4144

B.F. 0.33

B.F. 0.66

20B1000-166 (REF.)

20B1000-168 (REF.)

20B1033-1 (REF.)

20B1000-170 (REF.)

20B1000-172 (REF.)

20B1000C-5 (REF.)

1/4

MS52680832-10
AC 3658832

(4)

2 1/2 THRU

20U1047 (REF.)

TO MCR 6486

FWD.

PLAN VIEW - STARB'D SIDE

SCALE: 6"=1'-0"

SWIP AT B.F. 0.33

LKG AFT STB'D SIDE
SCALE: NONE

PBY-5A	28A1002	1	
LO-BAMC	28F4000	1	
XPBY-5A	28E1001	1	
LIST SYMBOL	MODEL	PART ASSY.	REQ.

REQUIREMENTS PER AIRPLANE

REPLACED

REPLACED BY

SCALE 6"=1'-0"

MS52680832-10
AC 3658832
05799-6
05786-KI-24
-4

PART No.	STOCK	MATERIAL	SPEC.	LH REQ.	RH REQ.	LH REQ.	RH REQ.	LH REQ.	RH REQ.	LH REQ.	RH REQ.	LH REQ.	RH REQ.
PARTS LIST PER ASSY.				-0		-2		-3		-4		-5	

AC
NAVY
HEAT TREAT
FINISH

DRAFT 10/4/43 | CHECK | STRUCT. | MAT. | APPROV. | SPEC.

NAME STOWAGE - FURNS. - BUOY HOOK

CONSOLIDATED AIRCRAFT CORP. SAN DIEGO, CALIF.

GPP. HARD —

SIZE D

28F4160

LET	ALTERATION	DATE	BY
A	ADDED 2 1/2a & 5 3/16 DIMENS. ARMS.	4-8-42	Thomas
B	CHANGED DIMENSIONS ON CUTOUT	4-22-42	Conley
C	1 7/8 WAS 2		
D	ADDED -7 AND -2 ASSY & PBLY-2 REQ		
E	ADDED -3 ASSEM. SAME AS -0 ASSEM EXCEPT -8 REPLACES -6	E.O. A21897	
F	ON -8, CORRECTED 3 5/64 DIM. TO SCALE. WAS OUT OF SCALE. NO WT. CHG.	E.O. A48529 3-1-43	
G	DRILL #18 (169) (4) WAS (5). 9/64" WAS 1/8. ADDED DIMS: 21/64, 1 3/8, 1 9/64, 2 3/64 & 5 1/64 & 45°. REMOVED DIM. 23/64 DIA. ADDED NOTE "#27 DRILL ---SCREWS" -9 WAS -6. WT. CHG. NEG.	8-1-42	Mooney
H	AN 455-D3 (12) WAS (6) 28F3094-7 WAS 28F3094 WT. CHG. NEG.	E.O. A55233 8-11-42	

2 9/32 DIA. (D)
1 HOLE IN -9, (-0 ASS'Y.)
2 HOLES IN -7, (-2 ASS'Y.)

3 5/32 DIA. (D)
3 HOLES IN -9 (-0 ASS'Y.)
2 HOLES IN -7 (-2 ASS'Y.)

-9 PANEL SYM. ABOUT ℄

THIS CUTOUT IN -9 & -7

THIS CUTOUT IN -9-7

DRILL #18 (169) 11 PLACES

℄ OF CUTOUT

M.T. SA53 CONDT

AN455-D3 RIVETS
DRILL 3/32 HOLE
WITH 28F3094
IN PLACE ~12 PLACES

28F3094-7

NOTE
THIS CUTOUT IN -7 ONLY (-2 ASS'Y.)

THIS CUTOUT IN -9 ONLY (-0 ASS'Y.)

NOTE
#27 DRILL (.144) 2 HOLES
FOR MOUNT SCREWS

DRILL #18 (169)
16 PLACES

-8 SAME AS -9 PANEL EXCEPT AS SHOWN

ASSY DASH NO.	MODEL	NEXT ASSY	REQ.
-3	28-5AMN	28F5017	1
-3	28-5MN		1
-3	28-5AMC		1
-3	28-5MC		1
-3	28-5MA		1
-0	PBY-5B		1
-0	PBY-5A	28F5017	1
-3	28-5-ME	28F3017	1
-2	PB2Y-2	29F1158	1
-0	PBY-5	28F5017	1

REQUIREMENTS PER AIRPLANE
REPLACES — CALC WT
REPLACED BY — ACT WT
LIMIT ON DIMENSIONS WHERE NOT OTHERWISE SPECIFIED: ± 1/32
SCALE: 12" = 1'-0"
STAMP PART NUMBER WHERE SHOWN

AN455-D3

28F3094-7

PART NO	STOCK	MATERIAL	SPEC.	LH REQ. -0	RH REQ. -2	LH REQ. -3	RH REQ. -4	LH REQ. -5	RH REQ. -6
-9	.051 X 10 X 14	AL. ALLOY	47A1 CLAD	1					
-8	.051 X 10 X 14	AL. ALLOY	47A1 CLAD			1			
-7	.051 X 10 X 14	AL ALLOY	47A1 CLAD		1				

PARTS LIST PER ASSY.

FINISH CODE	
Z	ANODIC TREATMENT
P	P-27 PRIMER
AP	ALUMINIZED PRIMER
C	CADMIUM PLATE

A C
NAVY NOTED — HEAT TREAT
Z-P-2DBL — FINISH

DRAFT: Thomas 4-8-42
CHECK: Conley 4-22-42
STRUCT.:
MAT.:
APPROV.:

NAME PANEL-FURNS.-NAVIGATORS INSTRU.
CONSOLIDATED AIRCRAFT CORP. SAN DIEGO, CALIF.

OPP. HAND
SIZE D
28F5015

EDC. 14643

EOA 28639

E.O.# A50710

LET	ALTERATION	DATE	BY
E	*1228-SHAKEPROOF LOCK WASHER WAS AC936-B1016. NO WT. CHG.	4-7-42	HAS [illegible]
F	CREATED-5 ASSY, ADDED 28E-5025-3, & REVISED THER. BULB TABLE. WT. CHG NEG	4-7-42	HAS [illegible]
G	IN REQ/AIRPLANE - 4 ASS'Y FOR 28-5AMN WAS - 3 ASS'Y; ADDED BA-838-SK THERM. BULB (REQ 3); CAC* BUL 31 WESTON TYPE 181 THERM. BULB (REQ 3) ADDED NOTE * ---- FURNISHED (NO WT. CHG)	7-24-42	STONE

E.O. 16383

E.O. 36478
PBY-5A
28-5AMC
OA-10
ALL MODELS EQ A4824

LET	ALTERATION	DATE	BY
A	ADDED 3 3/4 DIM.; 1 1/2 WAS 1"; 28E5025 LOCATE AT INST'N; & ANGLE CASE ADDED; 28F1013-25 & MISC REF/REQ		
D	ADDED [illegible] & CHANGED -D ASSY AS [illegible] & OA-10. -2 ASSY FOR [illegible] 28-5MC, 28-5AMC, 28-5MN	1/14/42	[illegible]
C	-B ASSY FOR PBY-5A & OA-10 WAS -2 ASSY; -4 ASSY FOR 28-5AMC WAS -2 ASSY; 28E5025-2 WAS 28E6025	4/16/42	KUTTLER
B	ON FACE 3/4 WAS 3 3/4	[illegible]	WIT

MECH'S WINDOW REQ.

(G) CAC* BUL 31 WESTON REQ (3) ON -2 & -4 ASS'Y. BA-838-SK THERM. BULB ON -0, -3 & -5 ASS'Y

THERMO. BULB CENTER VERTICALLY BETWEEN STRINGERS

28B1005-34 STRINGER (REF.)

Q7024-N41-032 WASHER

SUPERSTRUCTURE (REF.)

Q7019-41-032 WASHER

*1228-SHAKEPROOF LOCKWASHER (FOR 5/8 SCREW-REF) (E)

AN316-10R NUT

*18(169)-4 HOLES TO MATCH 28E5025-8 LT. PUNCH 82° X 9/16 AN506D8-8 (4). (A) AC365D832 (4)

THERM. BULB (REF.)

(A) 28E5025 LOCATE AT INST'N

28E5025-3 (FOR -5 ASSY ONLY) (F)

28B1005-35 STRINGER (REF.)

DECK LINE

(D) 3 1/2

CUTOUT FOR MECH'S SEAT (REF.)

DECK CONTOUR (REF.)

VIEW LOOKING FWD.

STA. *4.50 (REF.) 28B1450

STA. *4.625 (REF.)

VIEW LOOKING OUTB'D. - ST'BD. SIDE FWD.

* (G) INDICATES GOVERN. FURN'D

(F)

INSTRUMENT	MFG. & TYPE -0-3 & 5 ASS'Y	REQ	MFG. & TYPE -2 & 4 ASS'Y	REQ	MFG. & TYPE ASSY.	REQ
THERMOMETER BULB	* GOVERNMENT FURNISHED (BA-838-SK) (24V)	3	WESTON MOD. 606, TYPE 181 (24V-D.C.) BUL 31 WESTON	3		

(C)

ASSY. DASH No.	MODEL	NEXT ASSY	REQ
-4	28-5AMC	28E5647	1
-3	PBY-5A	28E1013	1
-2	28-5MN	28E5647	1
-4	28-5AMN	28E5663	1
-2	28-5MA	28E5647	1
-2	28-5MC	28E5647	1
-2	28-5ME	28E5647	1
-5	PBY-5B	28E6047	1
-0	PBY-5	28E1013-030	1

REQUIREMENTS PER AIRPLANE

REPLACES — CALC WT.

REPLACED BY — ACT. WT.

SCALE 6" : 1'-0"

STAMP PART NUMBER WHERE SHOWN

PART No.	STOCK	MATERIAL	SPEC.	LH REQ -0	RH REQ -2	LH REQ -3	RH REQ -4	LH REQ -5	RH REQ
				3	3		3		3
				3	3	3	3	3	3
				3	3	3	3	3	3
				3	3	3	3	3	3
				3	3	3	3	8	5
						1		1	
				1	1				
				3	3	3		3	3
				4	4	4		4	4
				4	4	4		4	4

-CAC* BUL 31 WESTON TYPE 181 THERM. BULB
-BA-838-SK THERM. BULB*
-Q7024-N41-032
-Q7019-41-032
-*1228 SHAKEPROOF LOCKWASHER
-AN 316-10R
-28E5025-3
-28E5025-2
-28E5025
-AC 365 D832
-AN 506 D8-8
-6

PARTS LIST PER ASSY.

AC — NAVY NONE — HEAT TREAT

NONE — FINISH

DRAFT — CHECK — STRUCT. — MAT. — APPROV.

NAME INSTALL'N. - FURNS. - THERMOMETER BULB

OPP. HAND

DWG. D

28F5040

CONSOLIDATED AIRCRAFT CORP. SAN DIEGO, CALIF.

LET	ALTERATION	DATE	BY
A	CHANGED SLOT PINS	[illegible]	[illegible]
B	CHANGED DIM [illegible]	[illegible]	[illegible]
C	CHANGED DIM [illegible]	[illegible]	[illegible]
D	IN B/M REFERRED "AL. ALLOY" 61 N		
	CL. T & 28,000 P.S.I. WITH "NOTED"		
	TO FACE ADDED MATERIAL NOTE.		
	NO WT. CHG.	5-29-42	HOOK

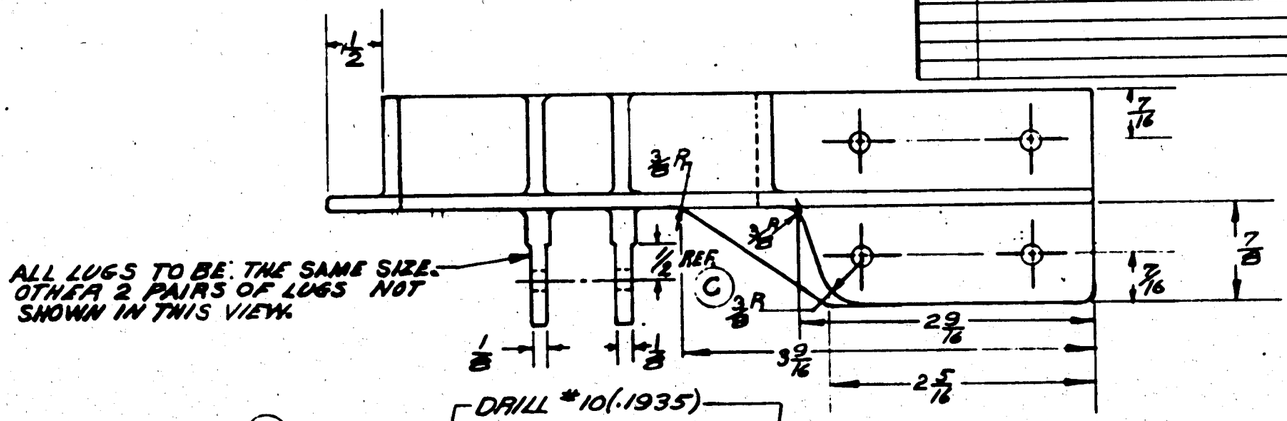

ALL LUGS TO BE THE SAME SIZE. OTHER 2 PAIRS OF LUGS NOT SHOWN IN THIS VIEW.

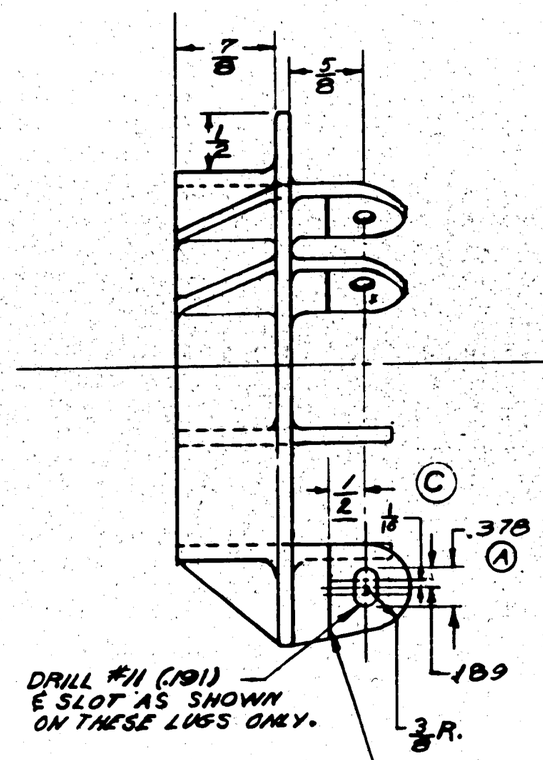

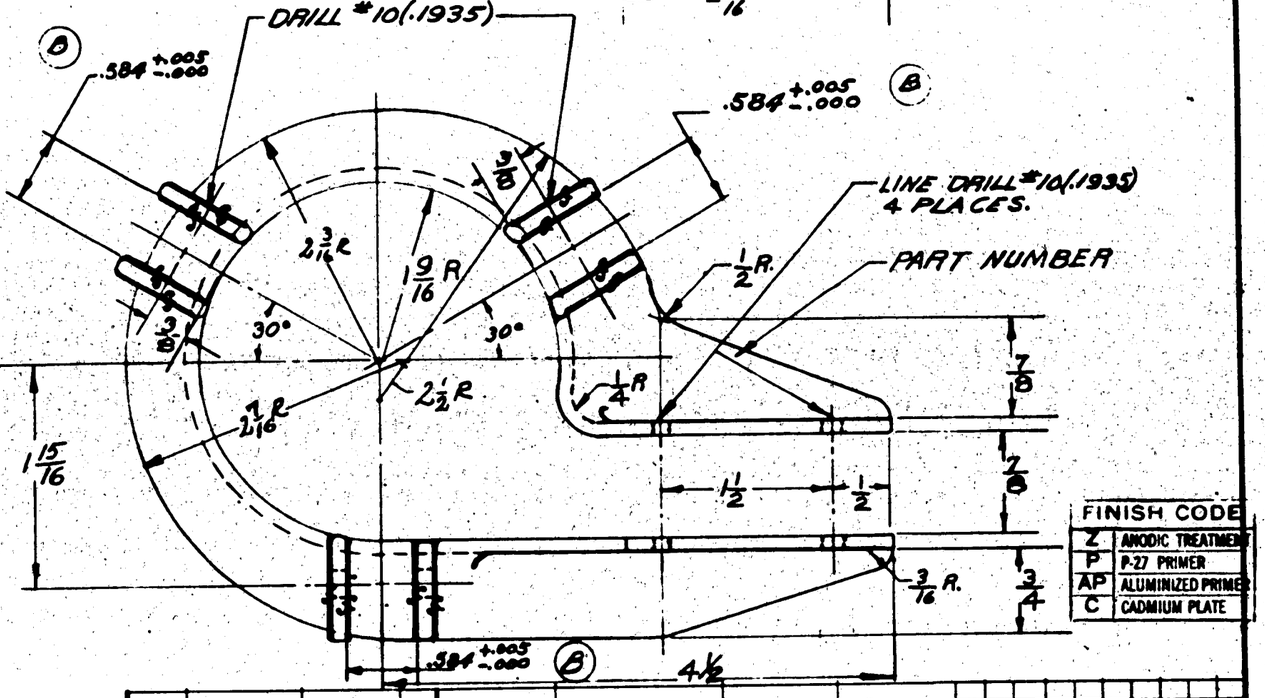

FINISH CODE	
Z	ANODIC TREATMENT
P	P-27 PRIMER
AP	ALUMINIZED PRIMER
C	CADMIUM PLATE

MATERIAL MAY BE:
(D) 1.- AL. ALLOY 195T4, SPEC. AN-QQ-A-350 CL I, T.S. 29,000 P.S.I.; OR
2.- AL. ALLOY 51S5T6, SPEC. AN-A-5 CL II, T.S. 32,000 P.S.I.

NOTES
THICKNESS OF ALL WEBS TO BE 1/8
ALL FILLET RADII TO BE MINIMUM UNLESS OTHERWISE NOTED.
ALLOW DRAFT AS REQUIRED

ASSY. DASH NO.	MODEL	NEXT ASSY.	REQ.
	28-5AMN	28F5009	1
	28-5MN	28F5009	1
	PBY-5B	28F5009	1
	PBY-5A	28F5009	1
	PBY-5	28F5009	1

REQUIREMENTS PER AIRPLANE

REPLACES — CALC. WT.
REPLACED BY — ACT. WT.
LIMIT ON DECIMALS UNLESS OTHERWISE SPECIFIED: ± 1/32 — SCALE 18"/1'-0"
STAMP PART NUMBER WHERE SHOWN

PART NO.	CASTING STOCK	NOTED MATERIAL	NOTED SPEC.	LH REQ.	RH REQ.	LH REQ.	RH REQ.	LH REQ.	RH REQ.	LH REQ.	RH REQ.	LH REQ.	RH REQ.
				-0		-2		-3		-4		-5	

PARTS LIST PER ASSY.

AC									
NAVY NOTED	ZP · AP								
HEAT TREAT	FINISH	DRAFT	CHECK	STRUCT.	MAT.	APPROV.	ENG.		

NAME INBOARD BRK'T. - FURN. - DRIFT SIGHT SUPPORT
OPP. HAND
CONSOLIDATED AIRCRAFT CORP. San Diego, Calif.
SIZE D
28F5059

28F5059

LET	ALTERATION	CHECK	DATE
A	ADDED CHROMATE PR ABOUT BAR CHANGE	[illegible]	[illegible]
B	CHANGED DWG SIZE TO D	[illegible]	[illegible]
C	NOTE: MIN BEND RADII ✱	[illegible]	[illegible]

28784

NOTE:
BEADS MAY BE PLACED UP OR DOWN.

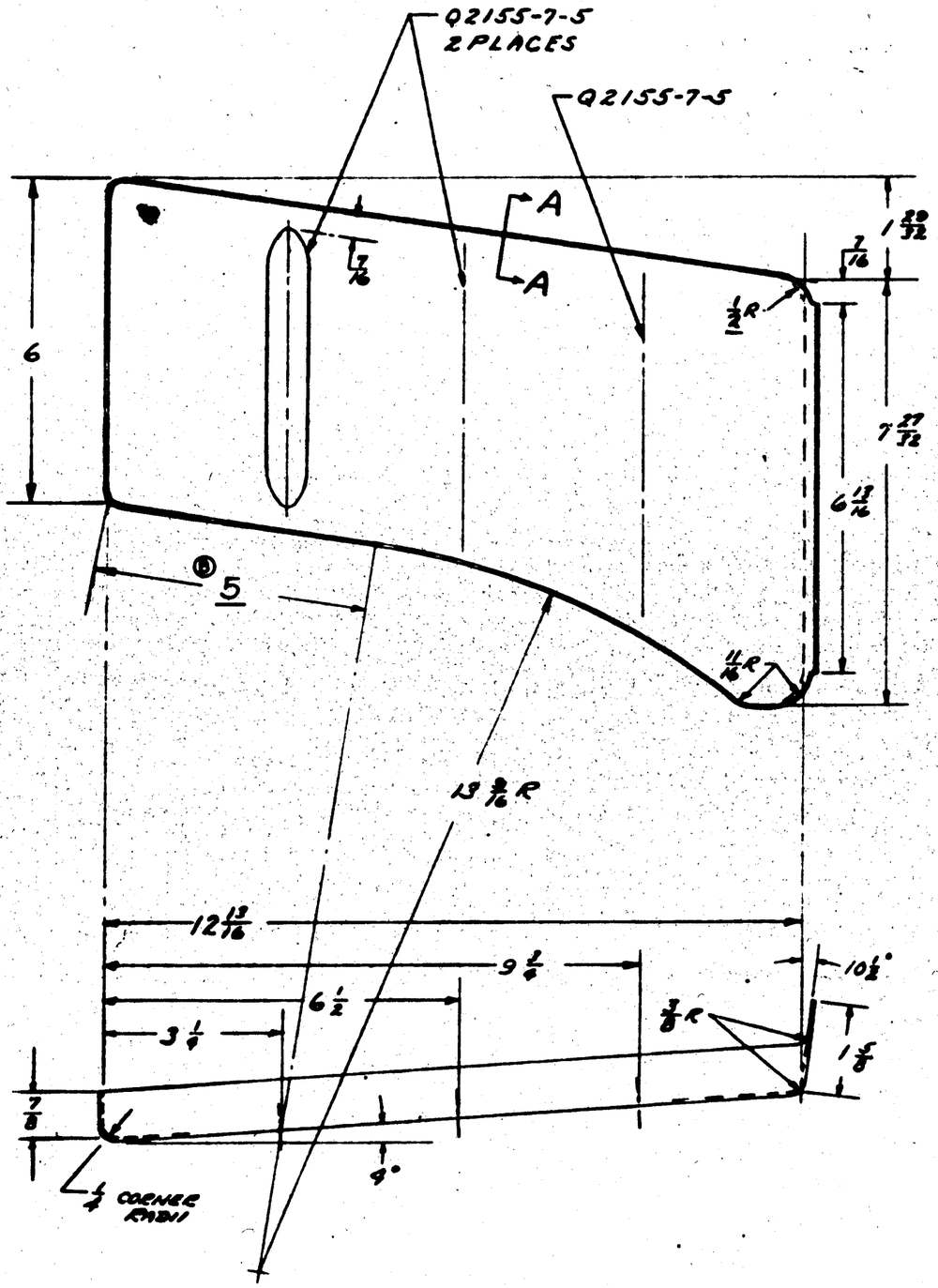

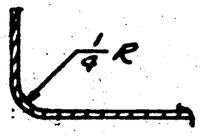

SEC. A-A
12"=1'-0"

© ALL RADII ± EXCEPT AS NOTED.

FINISH CODE	
Z	ANODIC TREATMENT
P	P-27 PRIMER
AP	ALUMINIZED PRIMER
C	CADMIUM PLATE

ASSY. DASH NO.	MODEL	NEXT ASSY.	REQ.
	PBY-5A	28F5050	1
	PBY-5	28F5050	1

REQUIREMENTS PER AIRPLANE

REPLACES

REPLACED BY

SALE WT.

ASY. WT.

SCALE 6"=1'-0"

LIGHT ON DRAWINGS UNLESS OTHERWISE SPECIFIED + 1/32

STAMP PART NUMBER WHERE SHOWN

PART NO.	STOCK	MATERIAL	SPEC.	LH REQ.	RH REQ.	LH REQ.	RH REQ.	LH REQ.	RH REQ.	LH REQ.	RH REQ.	LH REQ.	RH REQ.
				-0		-2		-3		-4		-5	
-6	0.064 [illegible]	AL ALLOY	2024-T3	1									

PARTS LIST PER ASSY.

AC		DRAWN	[illegible]
NAVY Spec. 7	Z-P-AP	4-5-40	[illegible]
HEAT TREAT	FINISH	DRAFT	CHECK / STRUCT / MAT. / ENGRG / SHOP

NAME PANEL - FURN'S-DW TYPE LOOP COUPLER BASE-SUPPORT

OPP. HAND

CONSOLIDATED AIRCRAFT CORP. San Diego, Calif.

SIZE D

28F5063

LET	ALTERATION	DATE	BY
A	REVISED CORNERS TO		
	CONFORM W.H. CONSTR.	3-4-40	APPD
B	ADDED STENCILLING & NOTE		
	"R" --- (APPROX). (ADD WT. 5 LBS)	11-18-40	[illegible]

SEE A.T. 41088

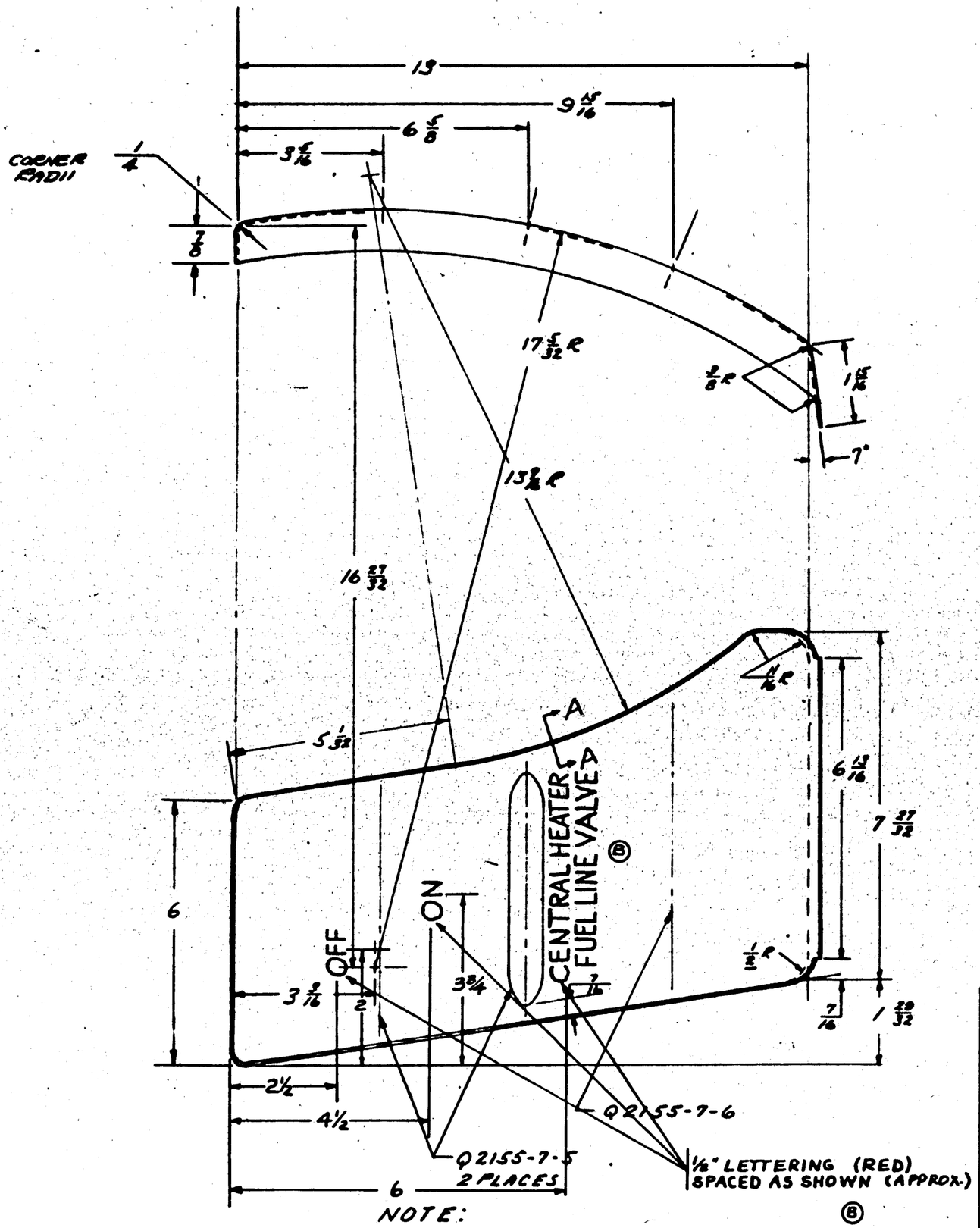

NOTE:
BEADS MAY BE PLACED UP OR DOWN.

BEND RADII 1/8 EXCEPT AS NOTED

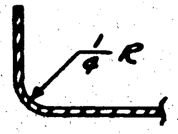

SEC. A-A
12"-1'-0"

FINIS. CODE	
Z	ANODIC TREATMENT
P	P-27 PRIMER
AP	ALUMINIZED PRIMER
C	CADMIUM PLATE

ASSY. DASH NO.	MODEL	NEXT ASSY.	REQ.
	PBY-5A	28F5050	1
	PBY-5	28F5060	1

REQUIREMENTS PER AIRPLANE

REPLACES — CALC WT.

REPLACED BY — ACT. WT.

LIGHT OR DIMENSIONS UNLESS OTHERWISE SPECIFIED: ± 1/32

SCALE 6"=1'-0"

STAMP PART NUMBER WHERE SHOWN

PART NO.	STOCK	MATERIAL	SPEC.	LH REQ.	RH REQ.	LH REQ.	RH REQ.	LH REQ.	RH REQ.	LH REQ.	RH REQ.	LH REQ.	RH REQ.
	.090 x 20 x 44"	AL. ALLOY	STAN Cond A	1									
PARTS LIST PER ASSY.				-0		-2		-3		-4		-5	

AC		FINISH	DRAFT	CHECK	STRUCT.	MAT.	APPROV.	ENG.
NAVY Cond. T	Z-P-AP		W.S-90			11/16/40		
HEAT TREAT								

NAME PANEL - FURN'S - DW TYPE
LOOP COUPLER BASE - SUPPORT

CONSOLIDATED AIRCRAFT CORP. San Diego, Calif.

OPP. HAND

DWG. D SIZE

28F5064

LET	ALTERATION	DATE	BY

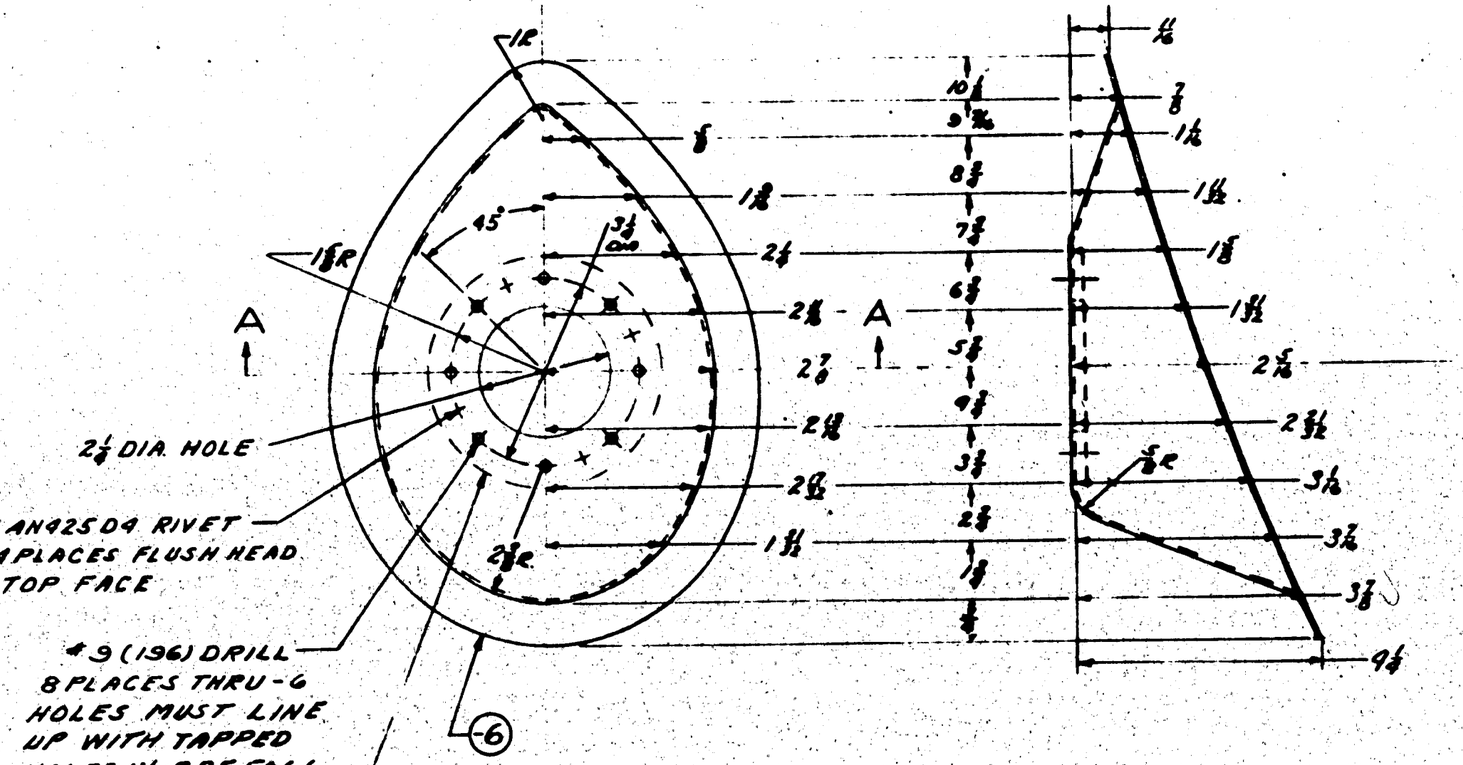

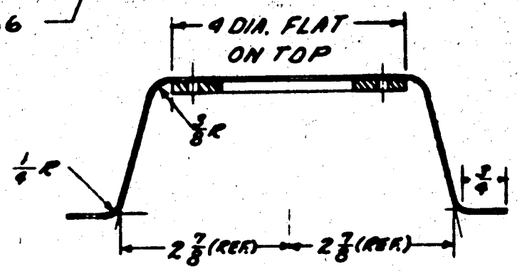

FINISH CODE	
Z	ANODIC TREATMENT
P	P-27 PRIMER
AP	ALUMINIZED PRIMER
C	CADMIUM PLATE

FINISH
Z-P ALL OVER. 2AP INSIDE ONLY.
OUTSIDE FINISH TO MATCH ADJACENT
SURFACE.

ASSY. DASH No.	MODEL	NEXT ASSY.	QTY.
-0	PBY-5A	28F5650	1
	PBY-5		1

REQUIREMENTS PER AIRPLANE

REPLACES — Chge. Wt.

REPLACED BY — Appl. Wt.

Limit on Decimal Dims Unless Otherwise Specified: ± 1/32 — SCALE 6"=1'-0"

STAMP PART NUMBER WHERE SHOWN

PART No.	STOCK	MATERIAL	SPEC.	L16 REQ.	L20 REQ.	L30 REQ.	L40 REQ.	L50 REQ.	L60 REQ.	L70 REQ.	L80 REQ.
PARTS LIST PER ASSY.				-0	-2	-3	-4	-5			
28F5066				1							
28F5066-6	.051 A.L. 2 R.B.	AN 425 D4 RIVET	STOCK SIZE	1							

AC
NAVY NONE — HEAT TREAT
NOTED — FINISH
DRAFT 1-9-40 — CHECK — STRUCT — MAT. — APPROV — ENG.

NAME SUPPORT-FURN'S-DW TYPE LOOP-UPPER WING.
OPP. HAND
CONSOLIDATED AIRCRAFT CORP. SAN DIEGO, CALIF.
SIZE D — 28F5065

LET	ALTERATION	DATE	BY
A	AN4-D14A WAS AN4-D14	8-21-40	Dawson
	AC364-DB32 WAS AC364-AB32		
B	Q7040-AL41-010 WAS Q7040-AL40-.010	11-1-40	Mercado
C	CHANGED ON FACE OF DWG - TO Q7006-AL11-30 WAS Q7006-AL11-30	11-20-40	Mercado
		"	"

E.O. 17207

28F5054 COVER PLATE.

Ⓑ Q70A0-AL41-.010 WASHER

TWO AN442AD4 RIVETS AT 90° AS SHOWN

28F5052 COLLAR

-6 TUBE FIN. Z-P INSIDE

28F5053 HANDLE ATTACHMENT

REAM .6928 +.0013 -.0000 I.D. 1" DEEP THIS END ONLY.

.7448 +.0000 -.0012 O.D. 1" LENGTH OF TUBE THIS END ONLY.

1/4

1/4

8 TUBE LENGTH.

AN442AD4 RIVET.

DRILL *F (.257)
AN4-D14A
AN365-D428 Ⓐ

Q810-06-M.S. SPACER
AN526DD832-12
AC364DB32 NUT Ⓐ
Q7006-AL11-30 WASH. Ⓒ

28F5058 LCK. PLATE.

22F307 HANDLE. FINISH-1 COAT DULL BLACK PAINT.

AN442AD4 RIVETS

28F5052 REF.

25°

INSTALL HANDLE IN POSITION SHOWN.

SECTION A-A

FINISH CODE

Z	ANOD'C TREATMENT
P	P-27 PRIMER
AP	ALUMINIZED PRIMER
C	CADMIUM PLATE

NOTE. ATTACH 28F5053 & 28F5052 TO -6 TUBE (REF.) WITH WET PRIMER.

PART NO.	STOCK	MATERIAL	SPEC.	LH REQ. -0	RH REQ. -2	LH REQ. -3	RH REQ. -4	LH REQ. -5	RH REQ.
Q7040-AL41-010				1					
Q7006-AL11-30				1					
Q810-06-M.S.				1					
AN442AD4									
AN526DD832-12				1					
AC364DB32				1					
AC365-D428				1					
AN4-D14A				1					
28F5058					1				
28F5054					1				
28F5053					1				
28F5052					1				
22F307					1				
-6	.75 x .032 x 6 1/8	AL. AL. TUBE	44721/2000 T	1					

PARTS LIST PER ASSY.

ASSY. DASH NO.	MODEL	NEXT ASSY.	REQ
PBY-5B	28F5009		1
PBY-5A	28F5009		1
PBY-5	28F5009		1

REQUIREMENTS PER AIRPLANE

REPLACES — CALC WT.

REPLACED BY — ACT. WT.

LIGHT ON DRAWING UNLESS OTHERWISE SPECIFIED: 1/32 — SCALE: 12"=1'-0"

STAMP PART NUMBER WHERE SHOWN

NAVY NONE — HEAT TREAT

-6 - ZP-INSIDE-AP ASSY-TOUCH UP ZAP — FINISH

DRAFT: Jack Chase 11/20/40 — CHECK: [illegible] — STRUCT: [illegible] — MAT.: [illegible] — APPROV.: [illegible] — ENG.: [illegible]

NAME COVER ASSY-FURN'S.-DRIFT SIGHT SUPPORT

OPP HAND

CONSOLIDATED AIRCRAFT CORP. SAN DIEGO, CALIF.

SIZE D — DWG 28F5068

= SPOTWELD

LET	ALTERATION	DATE	BY
	ADDED NOTE 3 IN BKDN. -10		
	Q4303 X 1/8 X .032 WAS		
	Q4303 X 1/8 X .040 WT CHG NEG	5-17-43	KELLY
S	TO B/M, ADDED "28P5181 REQ'D; AT		
	28P5181 & 22P642, ADDED "SEE NOTE		
	3" TO PART, ADDED NOTE 3: AT		
	CALLOUT OF 22P642 HOOK, ADDED		
	"(SEE NOTE 3)" & "28P5181 (SEE		
	NOTE 3)", NO WT CHG.	8-16-43	HOOK

LET	ALTERATION	DATE	BY
	-7 & -8 APPROX. 43 SHOWN." &		
	"Q4303 RIVETS TO HAVE		
	CSK. HEADS ON INSIDE." IN		
	B/M REMOVED Q4303-D4-6		
	(NEG WT CHG)	4-10-43	KINNARD
P	IN B/M FOR -3 REPLACED		
	"K13624-Y 2 1/8, AL. AL. EXT.,		
	4 LEAD CONDIT." WITH "Y-2-ABST.		
	X 2 1/8": (WT. CHG. NEG.)	4-23-43	KINNARD
Q	AN442-D3(4) WAS AN442-D4(4)		
	Q4303-D4(4) (2 PLACES) WAS		
	AN442-D3(4) (2 PLACES) WT CHG NEG	5-17-43	KELLY

LET	ALTERATION	DATE	BY
L	-10-2 & -22 WERE AN	2-27-43	KINNARD
	-21-0-1. NO WT. CHG.		
M	REMOVED -4 ASSY.	2-27-43	KINNARD
	WT. CHG. NEG.		
N	ON FACE "SYN. RUBBER SHEET"		
	(4 PLACES) WAS "WASHING" ON		
	FACE REMOVED NOTES: "Q43		
	03-D4-6, 5 PLACES THROUGH		

LET	ALTERATION	DATE	BY
A	CHANGED TO [illegible]	4-15-43	[illegible]
B	-2 ASS'M, -3-10 ADDED &		
	REQMTS FOR PARTS	7-22-43	KELLY
C	[illegible]		
	CHART FOR ANGLE "a" -11 & -12		
	CHANGED TO READ -2 & -3	9-14-43	KELLY
	REF. ON -2, Q4303-KB-4 MFR		
	Q4303-KB-5 & Q4303-KB-3.5		
	WAS Q4303-KB-4 & ON -3		
D	-13 WAS Q3781-KB-3.5, -14 WAS Q3781 -		
	KB-4, -15 WAS Q3781-KB-4, -16 WAS		
	Q3781-KB-5, NEG.	4-19-43	[illegible]
E	Q4303-D4-8 (5 PLACES) WAS		
	Q4303-D4-6 (5 PLACES),	4-15-43	[illegible]
F	AC940D14 WAS 229184, NEG. WT. CHG.	4-15-43	[illegible]
G	(CREATED) -5 ASSY. NEG. WT. CHG.	5-28-43	[illegible]
H	RUBBER HYCAR (CAC. "RU"9-50)		
	WAS RUBBER GUM "105" (CA.C.		
	"RUG"), FOR -13, -14, -15, -16,		
	WT. CHG. NEG.	8-16-43	KINNARD
J	CREATED -4 ASSY. ADDED "33/32"		
	FOR XP4Y-1 (NEG. WT. CHG.)	9-28-43	[illegible]
K	-13-14-15 & -16 MAT'L "SYN. RUB. SHT."		
	TYPE "GRB" WAS "RUB. HYCAR		
	(MADE FROM C.A.C. "RU 19-50)"		
	(NEG. WT. CHG.)	9-28-43	[illegible]

PDZY-3

E.O. A30113

E.O. A53115
E.C. A53504

(S) 28P5181 (SEE NOTE 3)
22P642 HOOK (SEE NOTE 3)
LOCATE ON ASSY.

22P643-2

Q806-2011 SPACER
AC940D14 WASHER (P)
AN442-02 RIVET

22P644 LH CLIP

22P644-1 RH CLIP

DETAIL "A"

SEE DETAIL "A"

(J) (M)

(Q) Q4303-D4 4 PLACES

22P641

(Q) Q4303-D4 4 PLACES

(A) (E) (N)

-14 ON -0 & -8 ASSY (D)
CEMENT SYN. RUBBER SHEET TO -7
(N) (C) -15 ON -2 ASSY (D) (J) (M)
CEMENT SYN. RUBBER SHEET TO -11

1

FLATTEN AS REQ.

3/32

1/2

Q

C

1 1/2 R

SEE NOTE

1/8 R

21/32

3/16

5/8

FOR -31 -0 ASSY ONLY

-7

-11

-2 ASS'Y ONLY (J) (M)

FOR -0-2-3 ASS'YS (J)

-20 (L)

-22

AN442-D3 4 PLACES (Q)

-21

1/4

1/2

1"

-9

-10 1" LONG -2 ASS'Y ONLY (B) (J) (M)

-6 FOR -0 & -2 ASS'Y ONLY

-12

-2 ASS'Y ONLY SEE NOTE #2 (J)

-8

-04 3 ONLY

AN442-D4

(C) -13 ON -0 & -3 ASS'Y (D)
CEMENT SYN. RUBBER SHEET TO -6 & -8
-16 ON -2 ASS'Y (D) (J) (M) (N)
CEMENT SYN. RUBBER SHEET TO -6 & -12

(C)

ASSEM Nº	ANGLE "a"
-0	30°
-2	10°
-3	30°

VIEW SHOWING HINGE FASTENING

-9 (REF.)

-17

1/2

-9

(G) FOR -3 ASS'Y. ONLY

FINISH NOTE:-
FINISH Z-P-AP ALCLAD PARTS BEFORE ATTACHING STEEL PARTS.

NOTE:-

(N)

1. CLAMP MUST GRIP 3" DIA TUBE FIRMLY. (R)
2. FINISHED LENGTH OF -12 IS 9 1/2
(S) 3.- 22P642 IS AN INTERCHANGEABLE ALTERNATE FOR 28P5181

Z	ANODIC TREATMENT	(C)	
P	P-27 PRIMER		
ZP	ZINC CHROMATE PRIMER		
C	CADMIUM PLATE	(A)	

ASSY. DASH No.	MODEL	NEXT ASSY.	REQ'D
-0	PDZY-3	28F1406	1
-3	PBY-5B	28F5014	1
-0	XPB2Y-3	29P4252	1
-2	XPB2Y-3	29P4253	2
-0	28-5 MN	28F5014	2
-0	PBY-5A	28F5014	2
-0	28-5 AMN	28F5014	2
-2	PB2Y-3	29P4252	1
-0	PB2Y-3	29P4252	1
-0	PB2Y-2	29F1406	1
-0	PBY-5	28F5014	2

REQUIREMENTS PER AIRPLANE

REPLACES .15# CALC. WT.

REPLACED BY ACT. WT.

LIMIT ON DIMENSIONS UNLESS OTHERWISE SPECIFIED ± .032

SCALE 12"=1'-0"

STAMP PART NUMBER WHERE SHOWN

PART No.	STOCK	MATERIAL	SPEC.	LH REQ. -0	RH REQ. -0	LH REQ. -2	RH REQ. -2	LH REQ. -3	RH REQ. -3	LH REQ. -4	RH REQ. -4	LH REQ. -5	RH REQ. -5
-22	109 X		CORR RES STEEL	AN RGW-423									
-21	AN 251-H1												
-20	AN 251-H1												
-16	[illegible]		SYN. RUBBER SHEET	TYPE III GR B									
-15	[illegible]		SYN. RUBBER SHEET	TYPE III GR B									
-14	[illegible]		SYN. RUBBER SHEET	TYPE III GR B									
-13	[illegible]		SYN. RUBBER SHEET	TYPE III GR B									
-12	5 3/4 x 1 1/4 x .032	ALCLAD SH	47AB CONDT										
-11	5 3/4 x 1 1/4 x .032	ALCLAD SH	47AB CONDT										
28P5181	(SEE NOTE 3)												
Q4303-D4													
AN442-D4													
AN442-D3													
AN442-D2													
Q806-2-D11													
AC940D14													
22P644-1													
22P644													
22P643-2													
22P642	(SEE NOTE 3)												
22P641													
-11	5 3/4 x 1 1/4 x .051	ALCLAD SH.	47AB CONDT										
-10	K13624 x 1 1/8	AL. AL. EXT	4GA9 CONDT										
-9	Y-2-ABST. X 2 1/8												
-8	3 1/4 x 1 1/8 x .032	ALCLAD	47AB CONDT										
-7	4 1/4 x 1 1/8 x .032	ALCLAD SH	47AB CONDT										
-6	6 1/4 x 1 1/8 x .051	ALCLAD SH	47AB CONDT										

PARTS LIST PER ASSY.

AC			
NAVY NONE	SEE FINISH NOTE		
HEAT TREAT	FINISH	DRAFT	CHKD

NAME STRAP ASSY - FURNS - DRIFT SIGHT STOW

CONSOLIDATED AIRCRAFT COR

DRAWING NO. 28F5070

SIZE D

SHEET 2

LET	ALTERATION	DATE	BY

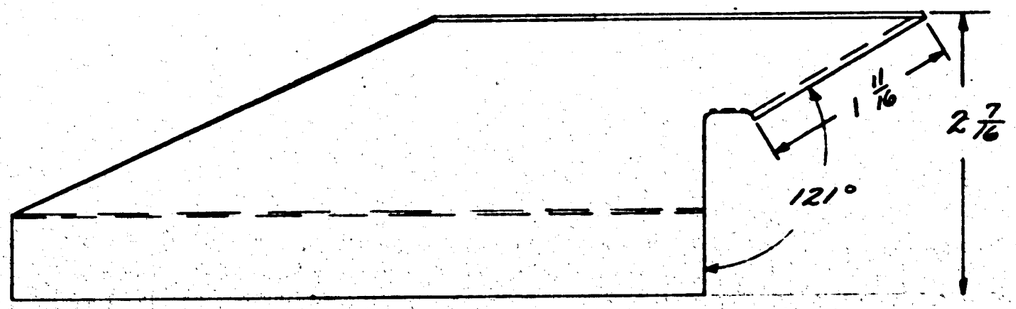

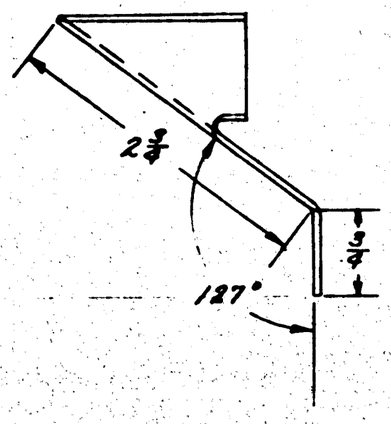

1/8 BEND RADII.

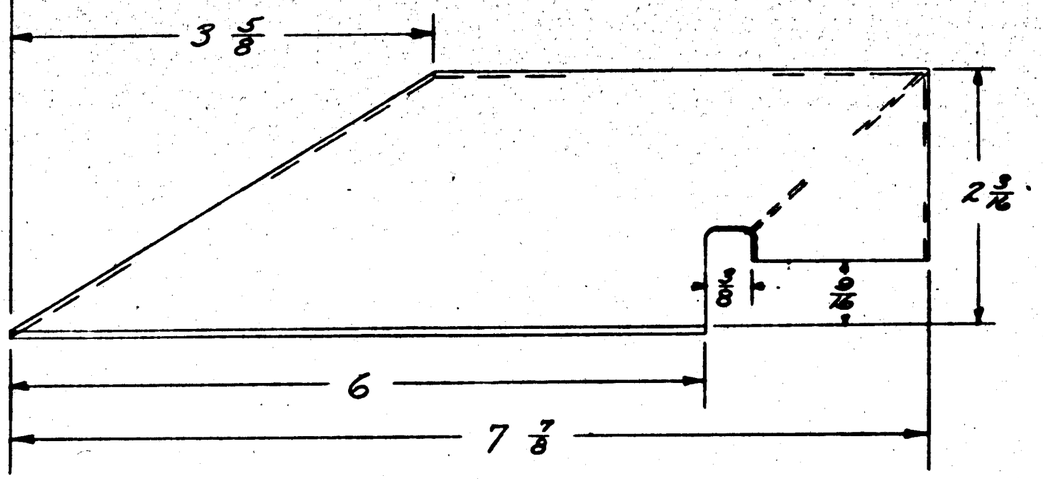

FINISH CODE

Z	ANODIC TREATMENT
P	P-27 PRIMER
AP	ALUMINIZED PRIMER
C	CADMIUM PLATE

ASSY. SASH No.	MODEL	NEXT ASSY.	QUAN.
	RBK5A	28F5080	1
	PBY-5	28F5080	

REQUIREMENTS PER AIRPLANE

REPLACES — Gross Wt.

REPLACED BY — Adv. Wt.

Check on Engineering Orders Affected by Drawings

SCALE 12"-1-0"

STAMP PART NUMBER WHERE SHOWN

PART No.	STOCK	MATERIAL	SPEC.	LH REQ. -0	RH REQ. -2	LH REQ. -3	RH REQ. -4	LH REQ. -5	RH REQ.
28F5082-3	.051 X 9 1/2 X 8 1/2	AL ALLOY	STAND COND	1					

PARTS LIST PER ASSY.

AC								
NAVY NONE	Z-P.AP	DRAFT	CHECK	STRUCT	MAT.	APPROV	ENG.
HEAT TREAT	FINISH						

NAME BRACKET-FURN-UPPER TRANSMITTER MOUNT SUPPORT

CONSOLIDATED AIRCRAFT CORP. San Diego, Calif.

OPP. HAND

SIZE D

28F5082

R

E.O. 22472

LET	ALTERATION	DATE	BY
A-1	1/8 R WAS 3/16 SPHERICAL RADIUS	[illegible]	[illegible]

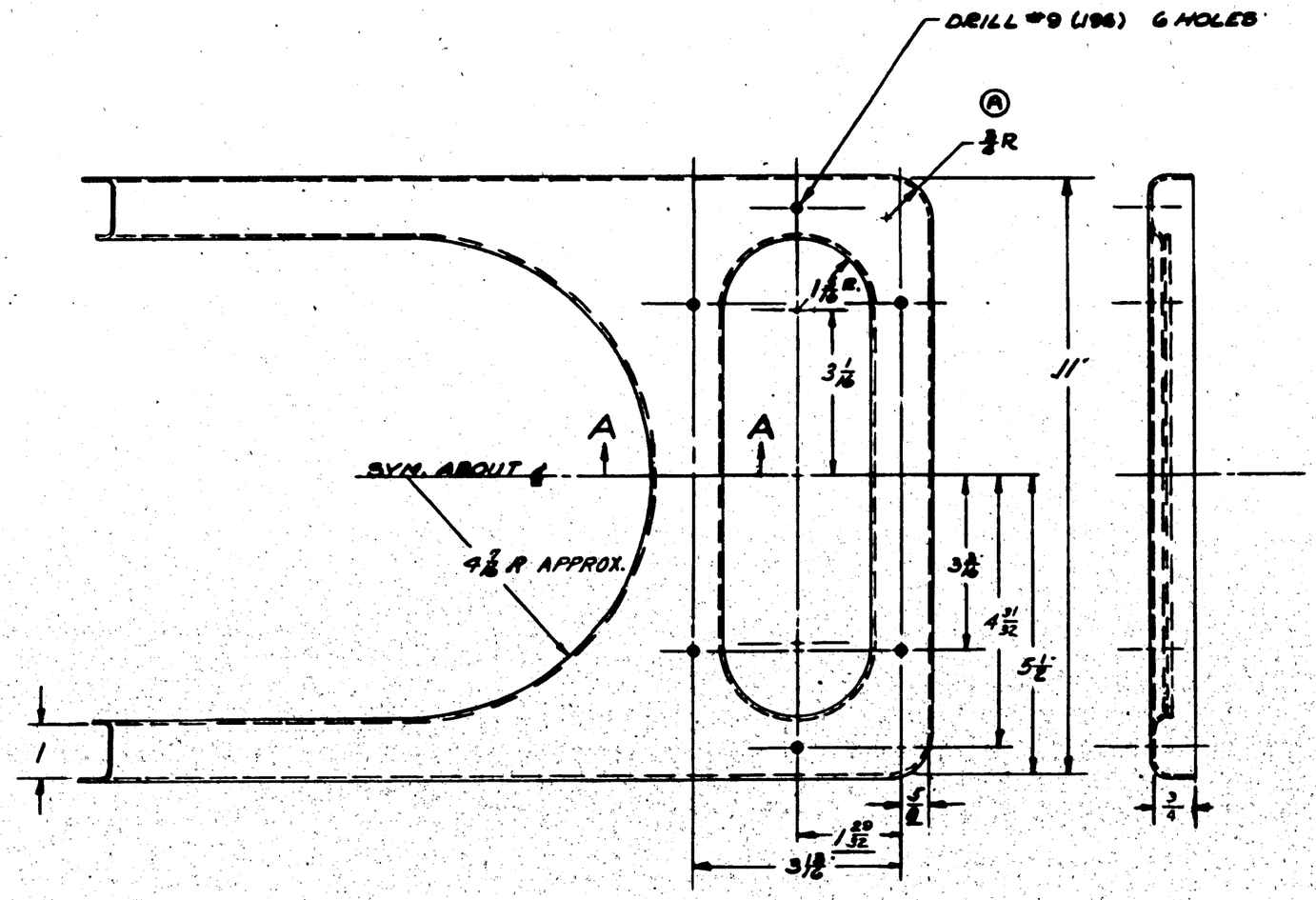

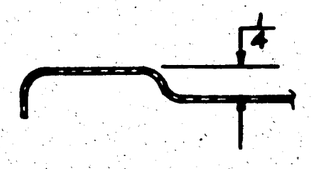

SEC. A-A
12"=1'-0"

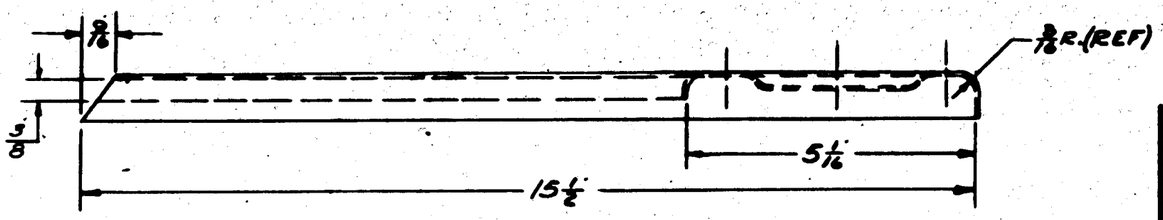

NOTE:
ALL FLANGE BEND RADII TO BE 3/16.

FINISH CODE	
Z	ANODIC TREATMENT
P	P-27 PRIMER
AP	ALUMINIZED PRIMER
C	CADMIUM PLATE

ASSY. DASH No.	MODEL	NEXT ASSY.	QUAN.
	PBY-5A	28F5083	1
	PBY-5	28F5083	1

REQUIREMENTS PER AIRPLANE

REPLACED — QUAN. WTS.

REPLACED BY — ASS'Y. WTS.

SCALE: 6"=1'0"

PART No.	STOCK	MATERIAL	SPEC.	LH REQ.	RH REQ.	LH REQ.	RH REQ.	LH REQ.	RH REQ.	LH REQ.	RH REQ.
	.040x16x20	ALCLAD	17HR COND A	-0	-2	-3	-4				

PARTS LIST PER ASSY.

AC			
NAVY-CAA-53 COND T	Z-P-AP		
HEAT TREAT	FINISH	DRAFT	CHECK

NAME: SUPPORT - FURNS - RL-24A INTERPHONE AMPLIFIER

CONSOLIDATED AIRCRAFT CORP. San Diego, Calif.

DEPT. NAME

SIZE D

28F5084

LET	ALTERATION	DATE	BY

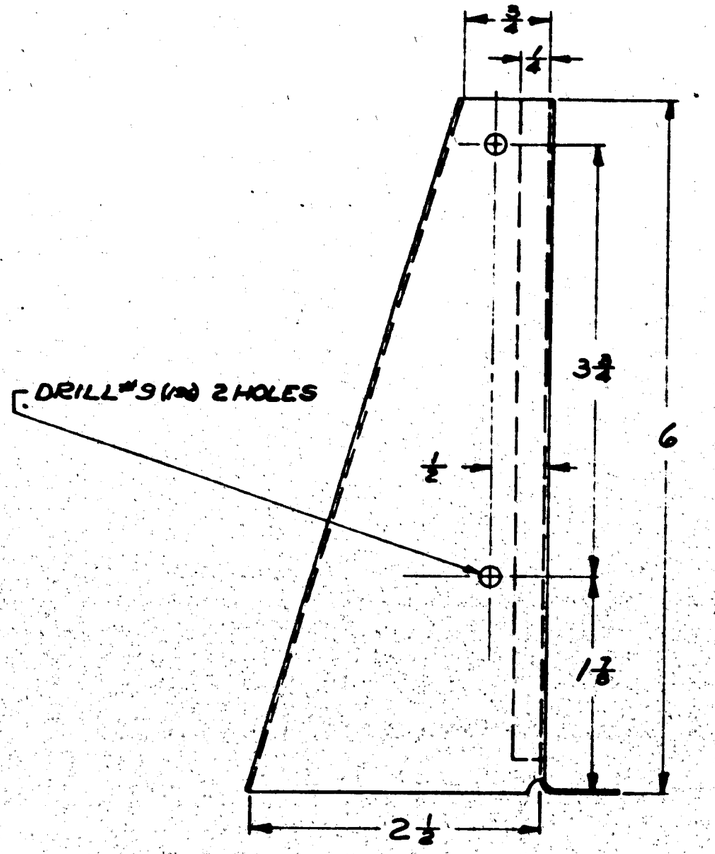

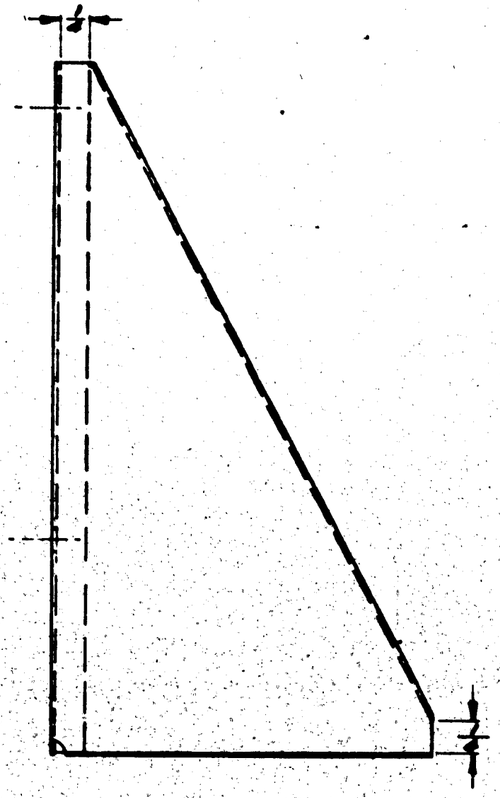

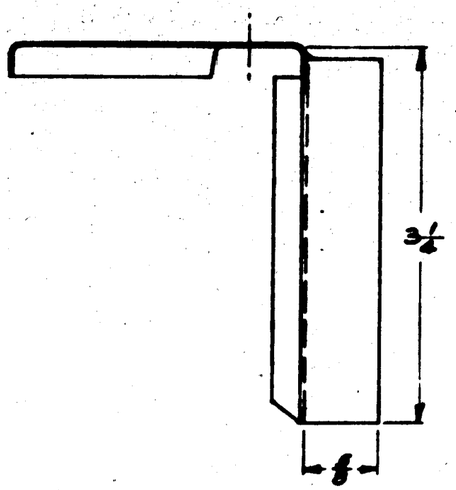

#63 & ON
#61 & ON

NOTE
ALL BEND RADII 1/16

A.S.V. Order No.	MODEL	NEXT ASSY.	QUAN.
PBY-5A	R&F 6440-1		
PBY-5	R&F 6440-1		

REQUIREMENTS PER AIRPLANE

REPLACES	GRAD. WT.
REPLACED BY	ASY. WT.
+ 1/32	SCALE 12" = 1'0"

STANDARD ASSY. ENGINEERING PRACTICE (SAE/AN)

PART No.	STOCK	MATERIAL	SPEC.	LH REQ.	RH REQ.	LH REQ.	RH REQ.	LH REQ.	RH REQ.	LH REQ.	RH REQ.	LH REQ.	RH REQ.
	.040 x 7 x 7	ALCLAD 24ST	47A8-T										
PARTS LIST PER ASSY.				-0		-2		-3		-4		-5	

AC		RELEASED					
NAVY	Z-P-AP	5-16-42					
HEAT TREAT	FINISH	DRAFT	CHECK	STRUCT.	MAT	APPROV.	ENG.

NAME BRACKET - FURNS -
BL-24A DYNAMOTOR SUPPORT

CONSOLIDATED AIRCRAFT CORP. San Diego, Calif.

OPP. HAND

DWG. SIZE D

28F3086

E.O. 22460
E.O. 22466
E.O. 27685
E.O. AC6955

LET	ALTERATION	DATE	BY
A	R. DIM. & NOTE ADDED	1-14-42	KING
B	DIMS. "E" & "G" & .375 FLANGED DOWN	1-14-42	KING
C	STAMP & ATT. PARTS ADDED	1-14-42	KING
D	REMOVED AN526-D10-10,		
	AC965-D1032, Q5799-8 &		
	Q5740KB-6.75 & LOCATING		
	DIMS. NEG. WT. CHG.	3-21-42	

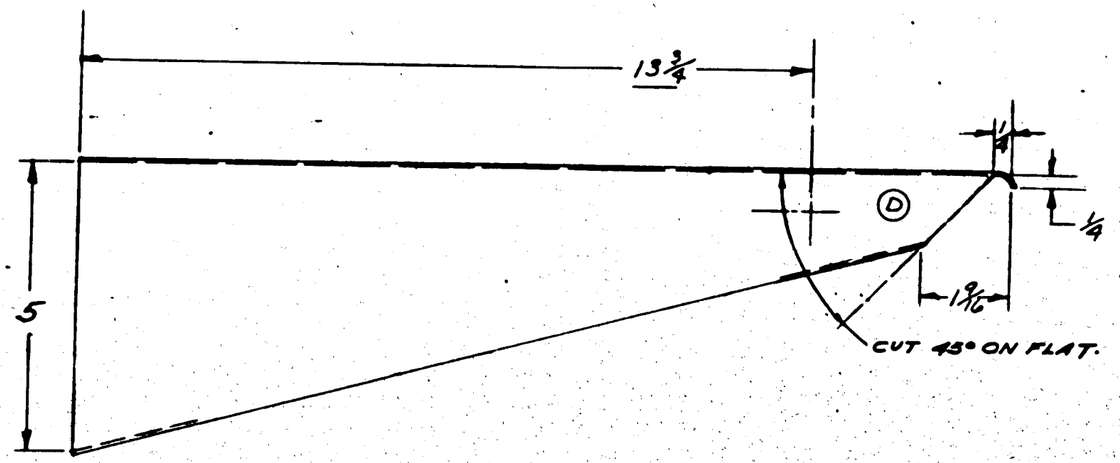

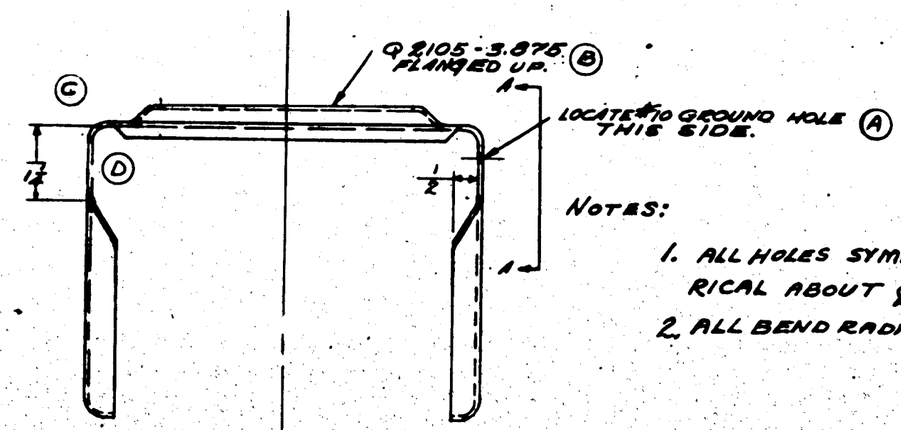

NOTES:

1. ALL HOLES SYMMETRICAL ABOUT ℄.
2. ALL BEND RADII 1/4 R.

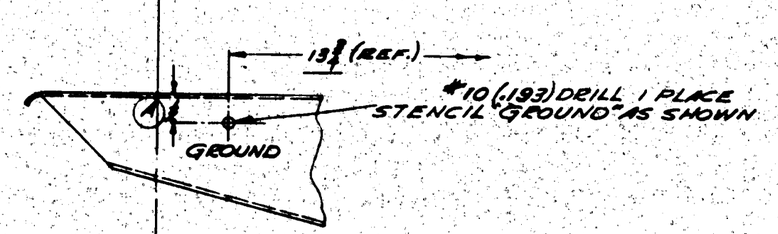

VIEW A-A.

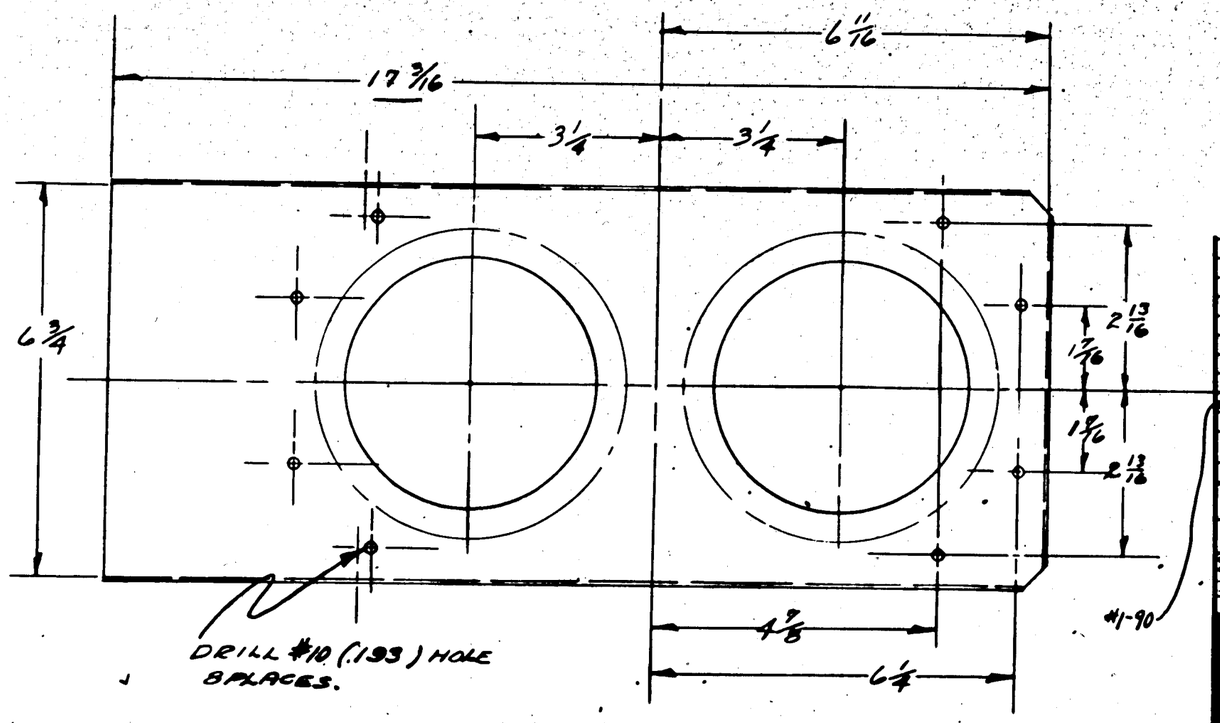

FINISH CODE

Z	ANODIC TREATMENT
P	P-27 PRIMER
AP	ALUMINIZED PRIMER
C	CADMIUM PLATE

ASSY. DASH NO.	MODEL	NEXT ASSY.	REQ.
	PBY-5A	28F5102	1
	PBY5	28F5102	1

REQUIREMENTS PER AIRPLANE

REPLACES — CALC. WT.

REPLACED BY — ACT. WT.

LIGHT ON DARKROOM PAPER OPPOSITE SIDE — SCALE 6" = 1'0"

STAMP PART NUMBER WHERE SHOWN

PARTS LIST PER ASSY.

PART No.	STOCK	MATERIAL	SPEC.	LH REQ. -0	RH REQ. -2	LH REQ. -3	RH REQ. -4	LH REQ. -5	RH REQ.
-6	.051 X 12 X 20	AL. ALLOY	47A10 CONDN	1					

		TOLERANCE	
A.C.			
NAVY	Z-P-AP	5/16/40	
HEAT TREAT	FINISH	DRAFT	CHECK

STRUCT. — MAT — APPROV. — ENG.

NAME SUPPORT - FURN- GF TRANSMITTER

CONSOLIDATED AIRCRAFT CORP. SAN DIEGO, CALIF.

OPP. HAND

SIZE D — 28F5101

LET	ALTERATION	DATE	BY
A	REMOVED THE DEVELOPED FLANGE BRKT. 1" DIA. 3/4, 2-7/8, 3/16 R 3/32 NOW 1/8. ADDED -7 & AN442AD4	6-11-40	
B	2460 WAS 2957, COND A WAS COND T, SR-53 WAS NONE	11-1-40	
C	ADDED 2-#30 DIA. HOLES	11-1-40	
D	REMOVED 2" X 3" FLANGE & REPLACED WITH 3/8 FLANGE ADDED -6L IDENTIFICATION TO -6 PART	12-29-40	
E	DIMENSIONS 4 7/16 WAS 4-7/16, 11/16 WAS 1/2, WT. CHG. NEG.	2-21-42	
F	REV. REGTS/AIRP. NO WT. CHG.	10-19-42	
G	W.B/M. FOR -7, REPLACED "K13624 X 3/4 AL. AL. EXTR. SPEC. QQ-A-354-T" WITH NOTED "ADDED NOTE 1, WT. CHG. NEG."	6-14-43	

E.O. 23580

E.O. 22806

E.O. A21720

E.O. A68941

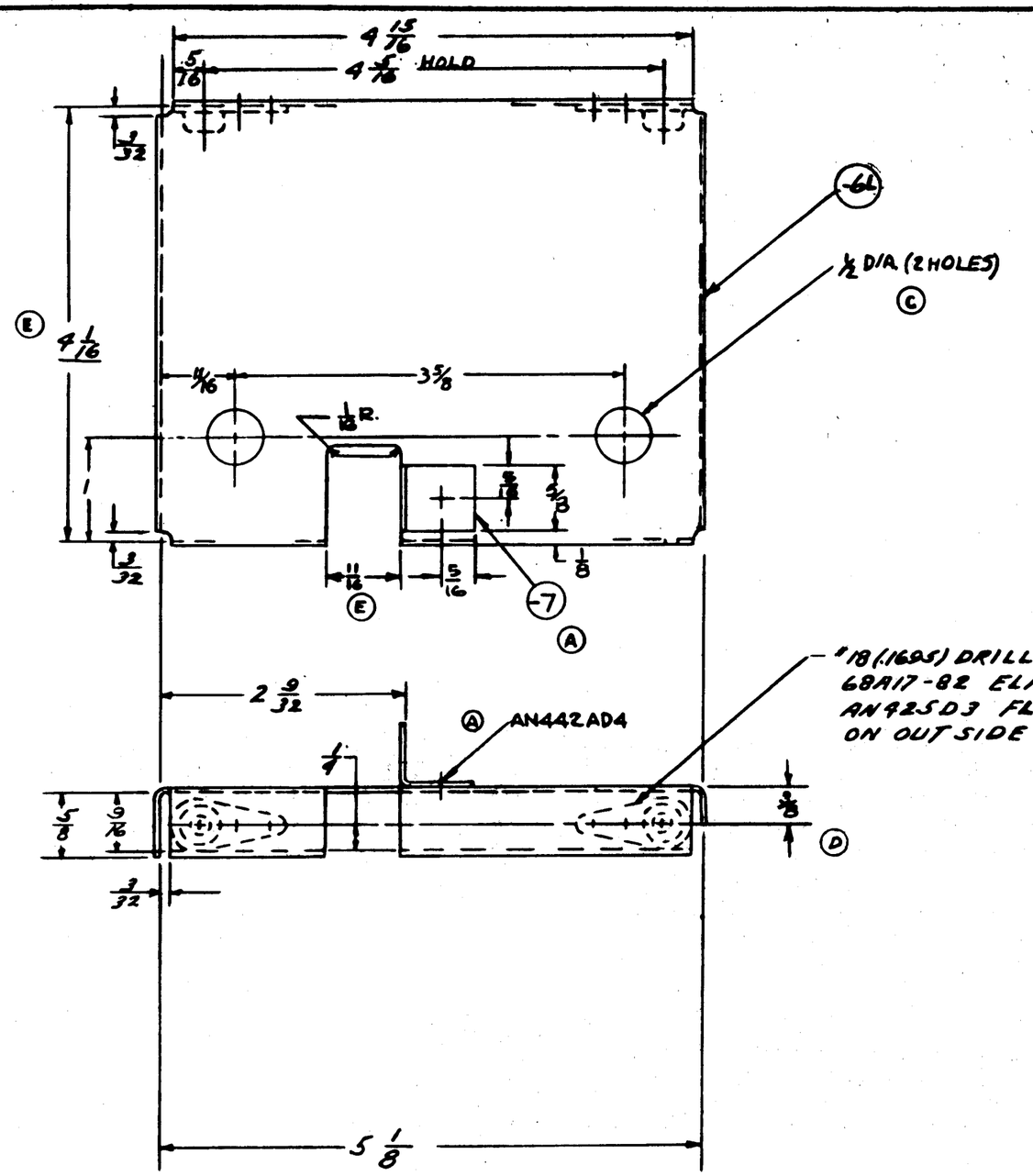

"18 (.1695) DRILL 2 PLACES
68A17-82 ELASTIC STOP NUT
AN925D3 FLUSH
ON OUT SIDE FACE

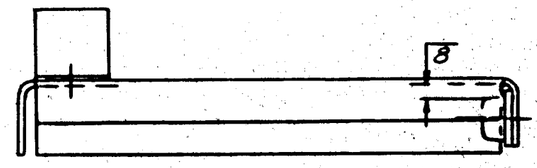

3/32 BEND RADII

FINISH CODE	
Z	ANODIC TREATMENT
P	P-27 PRIMER
AP	ALUMINIZED PRIMER
C	CADMIUM PLATE

MATERIAL NOTES-

(6) 1.-MAT'L. FOR -7 MAY BE-
(A.) Y-2-A20T X 3/4, OR
(B) K13624 X 3/4, AL. AL. EXTR., SPEC. QQ-A-354-T.

C. NO. 1(3)464
C 91876 #80 & ON
C 70496, 77713, & 88476 ONLY
C 91876 #1-89
C 70496 #28 & ON

L/R	MODEL	NEXT ASSY	DASH NO.	REQ'D
L/R	PBY-3A		28F6023	1/1
L/R	PBY-5		28F6023	1/1
R	PBY-5A		28F5102	1
L	PBY-5A		28F5102	1
R	PBY-5		28F5102	1
L	PBY-5		28F5102	1

REQUIREMENTS PER AIRPLANE

REPLACES

REPLACED BY

CALC WT.

ACT WT.

LIMIT OR DIMENSIONS UNLESS OTHERWISE SPECIFIED + 1/32 -

SCALE 12"=1'-0"

STAMP PART NUMBER WHERE SHOWN

PART NO.	STOCK	MATERIAL	SPEC.	-0 REQ.	-2 REQ.	-3 REQ.	-4 REQ.	-5 REQ.
AN442AD4				2	2			
AN425D3				1	1			
68A17-82				1	1			
-7	NOTED	NOTED	NOTED					
-6R	.040 X 10 X 11	AL. ALLOY	47A10-A					
-6L	.040 X 10 X 11	AL. ALLOY	47A10-A	1	1			

PARTS LIST PER ASSY.

AC			CH.	GREEN	5-29-40	BRZ.	
NAVY SR-53	Z-P-AP	5-28-40			5-29-40		R
HEAT TREAT	FINISH	DRAFT	CHECK	STRUCT	MAT	APPROV	ENG

NAME BRACKET-FURN-PILOT'S INTERPHONE CONTROL BOX SUPPORT

CONSOLIDATED AIRCRAFT CORP. SAN DIEGO, CALIF.

OPP. HAND 28F5106R

DWG. D SIZE 28F5106

DD R 28F5106

LET	ALTERATION	DATE	BY
A	CHANGED FL. ON -6 TO ½ ALL AROUND. ADDED -12 ATTACHED BY SPOT WELDING. -6 MAT'L. WAS 47A10 CON. A	7-[illegible]-40	[illegible]
B	ADDED -13 FILLER	7-[illegible]-40	[illegible]
C	ADDED ¾ R	11-1-40	F.W. [illegible]
D	DIM. 1 3/16 (2) WAS 2" (2) - MFG. W TOM	10-15-42	H.M. [illegible]
E	ADDED NOTE TO FACE OF DWG. "RECLAIMED ---- GR. B" REMOVED "SPONGE RUBBER R 14" IN B.M. FOR -9, -10, & -11. WT. CHG. NEG.	10-14-42	H. Holl

E.O. 21473
E.O. A71552

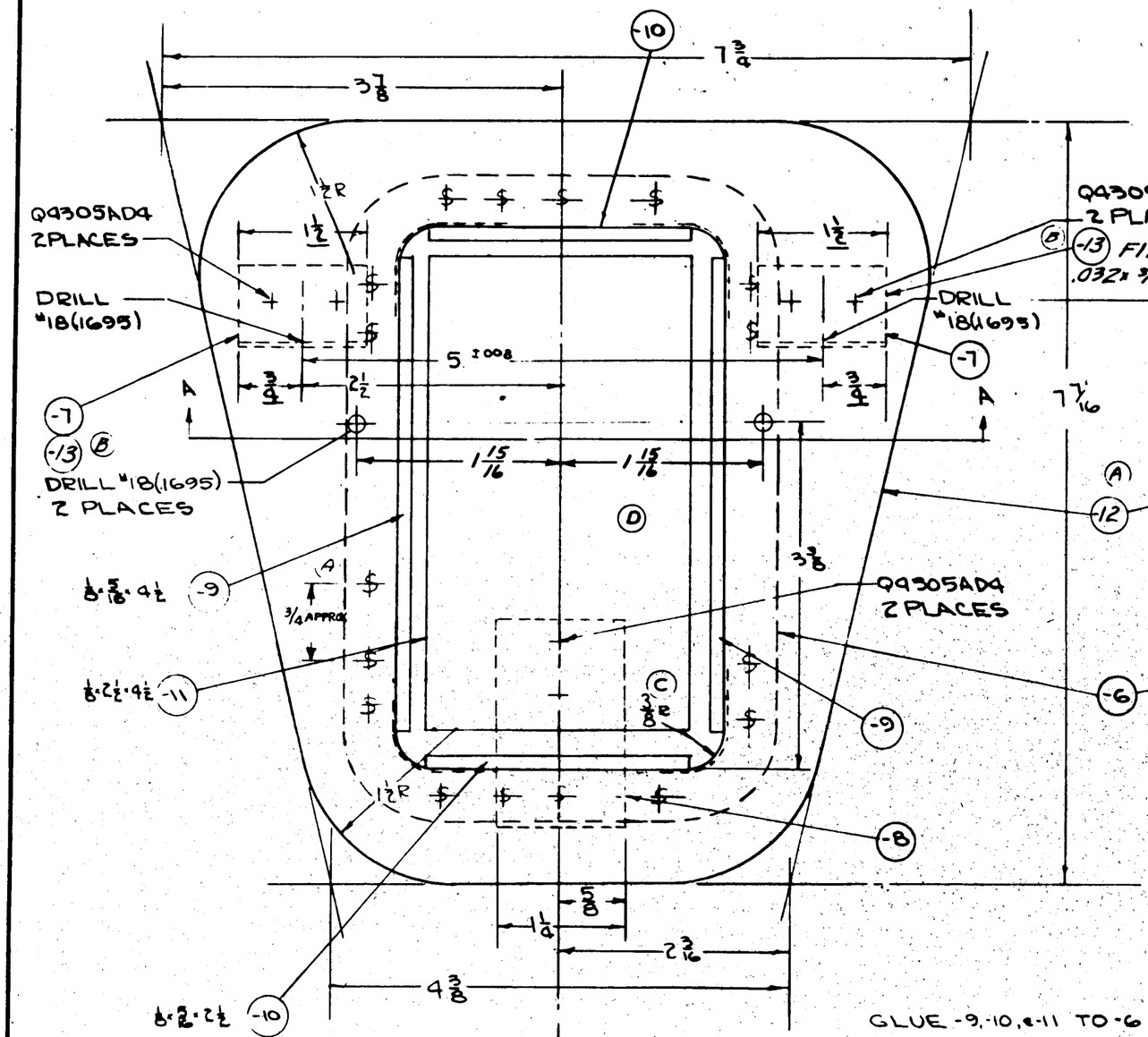

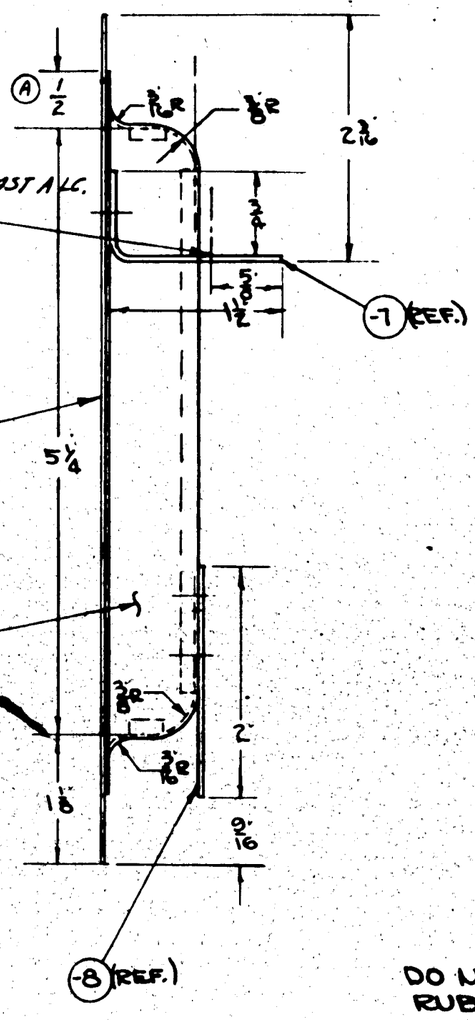

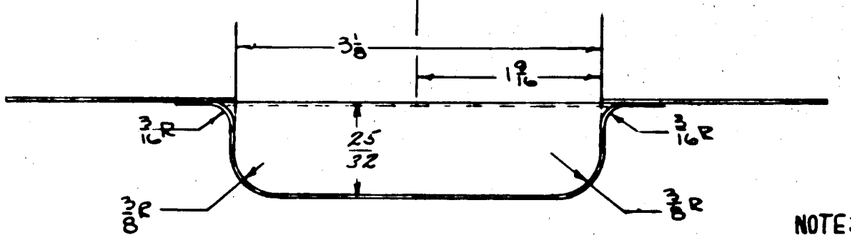

SECTION A-A

NOTE:
(E) MATERIAL FOR -9, -10 & -11 RECLAIMED SPONGE RUBBER AC SPEC. 26578 GRADE B.

DO NOT FINISH EXPOSED RUBBER

FINISH CODE	
Z	ANODIC TREATMENT
P	P-27 PRIMER
AP	ALUMINIZED PRIMER
C	CADMIUM PLATE

ASSY. DASH NO.	MODEL	NEXT ASSY	REQ.
	PBY-5A	28F5050	1
	PBY-5	28F5050	1

REQUIREMENTS PER AIRPLANE

REPLACES — CALC. WT.

REPLACED BY — ACT. WT.

LIGHT ON DIRECTIONAL UNLESS OTHERWISE DESIGNATED: + 1/32 −

SCALE 12" = 1'-0"

STAMP PART NUMBER WHERE SHOWN

PART NO.	STOCK	MATERIAL	SPEC.	-0 LH RH REQ.	-2 LH RH REQ.	-3 LH RH REQ.	-4 LH RH REQ.	-5 LH RH REQ.
Q9305AD4								
(B) -13	.032 x 7/8 x 1 1/4	24ST AL ALLOY	47A10 COND T	R				
(A) -12	.032 x 7 5/16 x 7 1/2	24ST ALCLAD	47A8 COND T	1				
-11	1/8 x 2 1/2 x 4 1/2	NOTED	NOTED	1				
-10	1/8 x 5/16 x 2 1/2	NOTED	NOTED	2				
-9	1/8 x 5/16 x 4 1/2	NOTED	NOTED	2				
-8	.064 x 3 x 1 1/2	24ST ALALLOY	47A10 COND T	1				
-7	.064 x 1/2 x 3	24ST ALALLOY	47A10 COND T	2				
28F5109 -6	.032 x 12 x 12	24S.O ALCLAD	47A8 COND A	1				

PARTS LIST PER ASSY.

AC
NAVY (-6) 3R-53 (COND T) — Z WITHOUT RUBBER P-AP
HEAT TREAT — FINISH

DRAFT	CHECK	STRUCT	MAT'L	APPROV	ENG
[illegible]	J.C.H.	[illegible]	[illegible]	[illegible]	[illegible]

NAME PANEL-FURNS-LOOP OUTPUT METER
CONSOLIDATED AIRCRAFT CORP. SAN DIEGO, CALIF.

OPP. HAND

DWG. SIZE D — 28F5109

E.O 21877
E.O 20531
E022197

LET	ALTERATION	DATE	BY
A	[illegible]	11-1-40	[illegible]
B	[illegible]	1-27-41	FRANKS
C	[illegible]	1-27-41	FRANKS
	NEW MATL REPLACED "AL. ALLOY CASTING"		
	CLASS 7 "30,000 TENSILE" WITH		
	NOTED. TO MAKE ADDED MATERIAL [illegible]		
	NO WT. CHG.	8-28-43	ADAMS

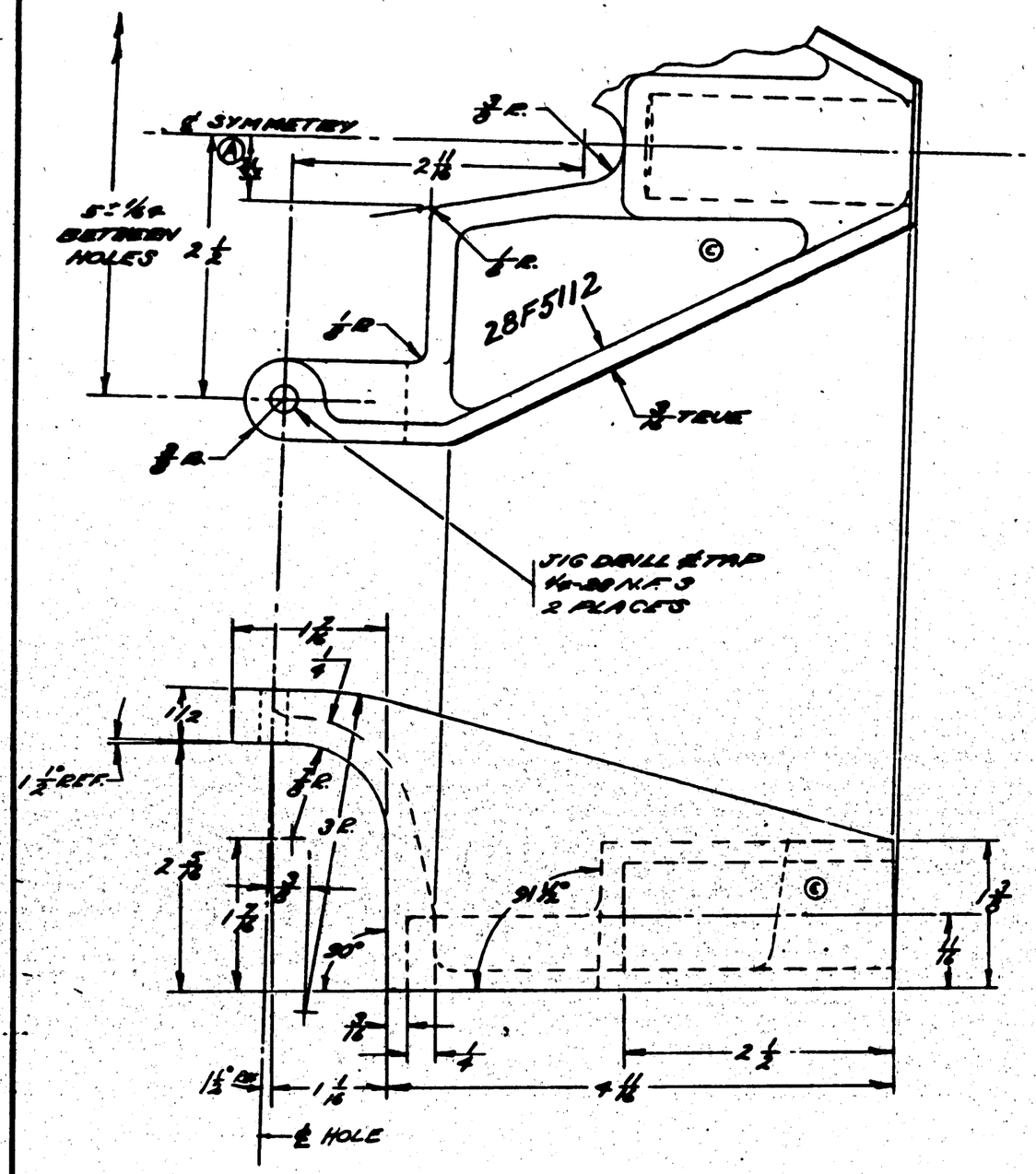

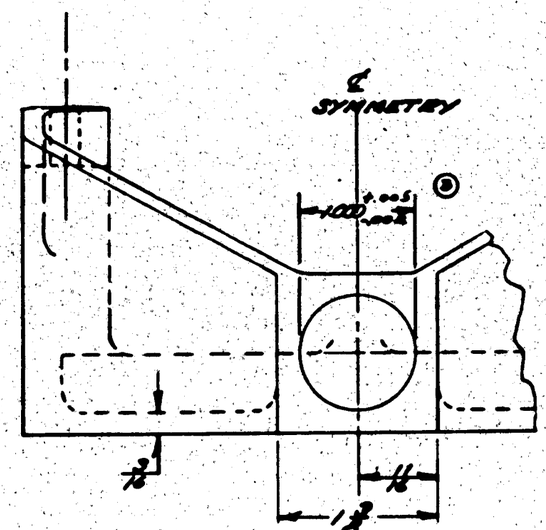

C 31878
C-17713 & C 28476
28ME division

	MODEL	NEXT ASSY.	REQ.
	PBY-5	28C5567	1
	PBY-5B	28C5567	1
	PBY-5A	28C5567	1
	28-5 NMC	28F5111	1
	28-5ME-MN	28F5111	1
	28-5MA-MC	28F5111	1
	28-5AMN	28C5567	1
	PBY-5A	28F8237	1
	PBY-5	28F8237	1

ASSY. DASH NO. | REQUIREMENTS PER AIRPLANE

CONTR.# 70496
CONTR.# 70496

PART NO.	STOCK	MATERIAL	SPEC.	LH REQ.	RH REQ.	LH REQ.	RH REQ.	LH REQ.	RH REQ.	LH REQ.	RH REQ.	LH REQ.	RH REQ.
-6	CASTING	NOTED	NOTED										
PARTS LIST PER ASSY.				-0	-2	-3	-4	-5					

REPLACED | SMAL WT.
REPLACED BY | ASY. WT.
SCALE 12" = 1'0"
A C | NAVY NOTED | HEAT TREAT | NONE | FINISH
DRAFT | CHECK | STRUCT. | MAT | ASSEM. | ENG.

NAME CASTING-ELE. AIL. CONTROL LOCK
OPP. HAND
DWG. D SIZE 28F5112
CONSOLIDATED AIRCRAFT CORP. SAN DIEGO, CALIF.

Ⓓ MATERIAL MAY BE:
1.- AL. ALLOY 195T4, SPEC AN-QQ-A-380 CL I, T.S. 20,000 P.S.I, OR
2.- AL. ALLOY S195T6, SPEC AN-A-5 CL. II, T.S. 32,000 P.S.I.

NOTE:
ALL RADII 3/16 UNLESS OTHERWISE NOTED
CAST PART NO. WHERE SHOWN

LET	ALTERATION	DATE	BY
A	CHGD. SPOTWELDING TO RIVETS	8-30-40	[illegible]
B	3/8 DIA. HOLE ADDED	11-4-40	KING

P&WS
E.O. 28148

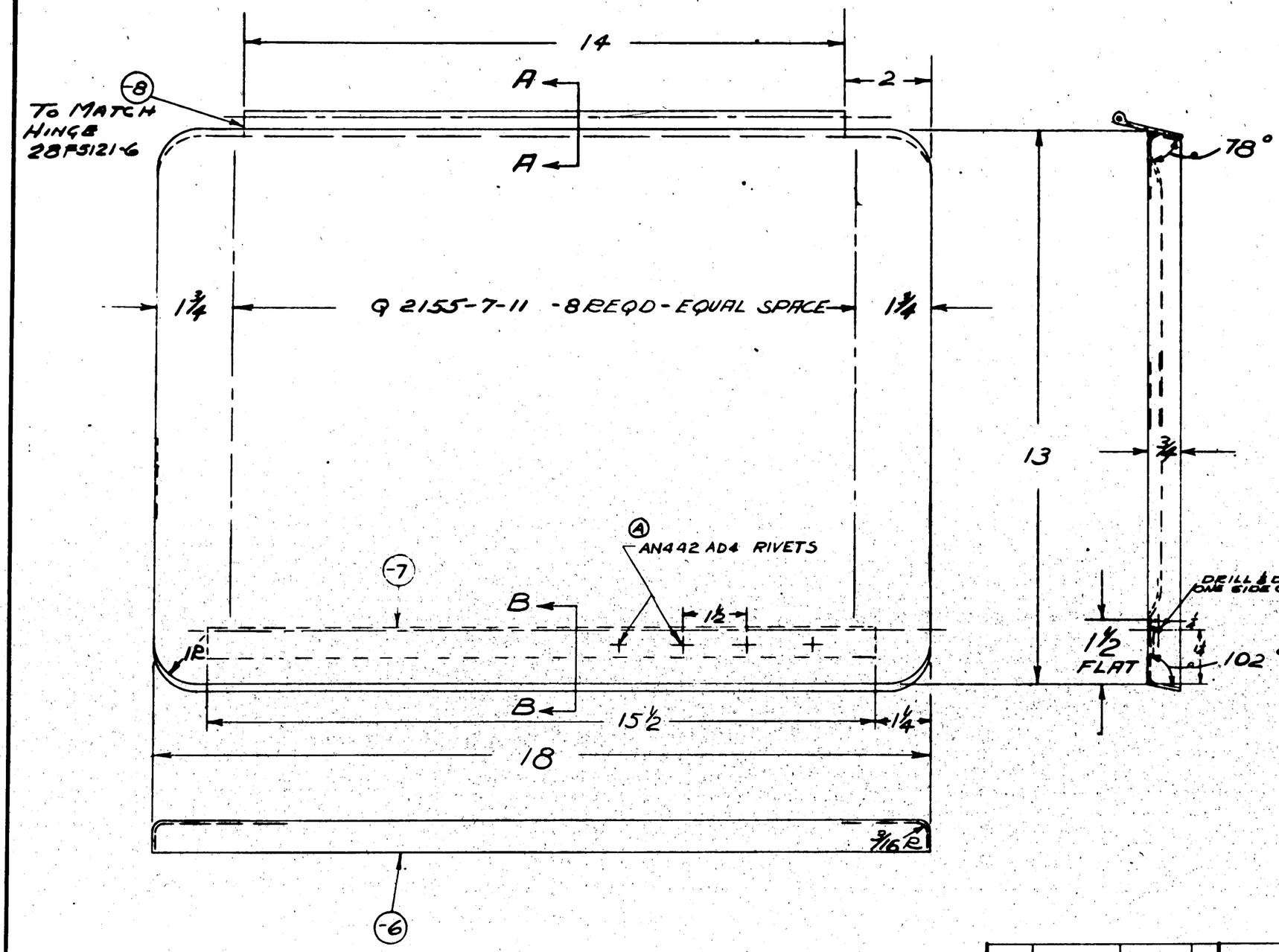

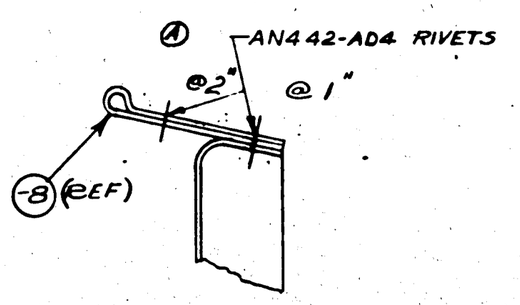

SECTION A-A
12" = 1'-0"

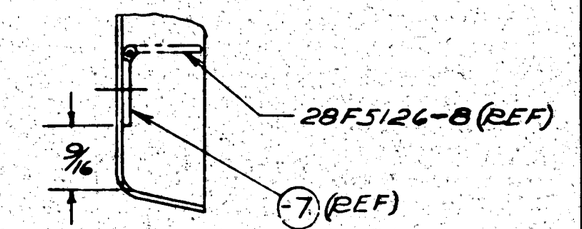

SECTION B-B
12" = 1'-0"

GP-GREEN PRIME

FINISH COD	
Z	ANODIC TREATMENT
P	P-27 PRIMER
AP	ALUMINIZED [illegible]
C	CADMIUM PLATE

PART DESIGNED FOR DROP HAMMER

MAKE PARTS FOR SERVICE INSTALLATION ON AIRPLANES #2289 TO #2312 INCL.
MAKE PARTS & INSTALL BY C.A.C ON AIRPLANES #2313 TO #2488 INCL.
CONTRACT CHANGE "J"
S.O. 936-17

ASSY. BASH No.	MODEL	NEXT ASSY.	REQ'D
-6	PBY-5B	28F5296	1
	PBM-5A	28F5261	1
	PBY-5	28F5121	1

REQUIREMENTS PER AIRPLANE

REPLACES — 172 CCL CALC. WT.
REPLACED BY — ACT. WT.
SCALE 6" = 1'-0" & NOTED
+ 1/32 ∮ ½°
STAMP PART NUMBER WHERE SHOWN

PART No.	STOCK	MATERIAL	SPEC.	LH REQ.	RH REQ.	LH REQ.	RH REQ.	LH REQ.	RH REQ.	LH REQ.	RH REQ.
				-0	-2	-3	-4	-5			
-8	Y56-A B&T X 14			1							
-7	Y56-A B&T X 13½			1							
-9	.051 X 18½ X 23⅝	ALCLAD	4278-A	1							

PARTS LIST PER ASSY.

AN442AD4

AC
NAVY AM7-SAE 5253 ALL COND A
HEAT TREAT
Z-P-GP
FINISH
6-28-40
9-5-40
DRAFT
4/11/44
CHECK STRUCT. MAT. APPROV. SIGS.

NAME SUPPORT ASSEM-FUEN-BOMBERS KNEE REST
OPP. HAND
CONSOLIDATED AIRCRAFT CORP. SAN DIEGO, CALIF.
SIZE D
DWG. 28F5122

LET			
	REVISIONS		
A	CHANGED MATERIAL ...		
	CHANGED ...		
B	ADDED NOTE "ARTIFICIAL ..."		
	ADDED NOTE "ALTERNATE ..."		
	ADDED LETTER "D" ...		
	NOTED: "AT CAC REQ ..."	DAC	
D	NOTE 2 ADD. "ALTERNATE MATL. ..."		
	MAY BE SCRAP GR.A FABRIC ...		
	CAC FABRIC SPEC. AN-CCC-C-389		

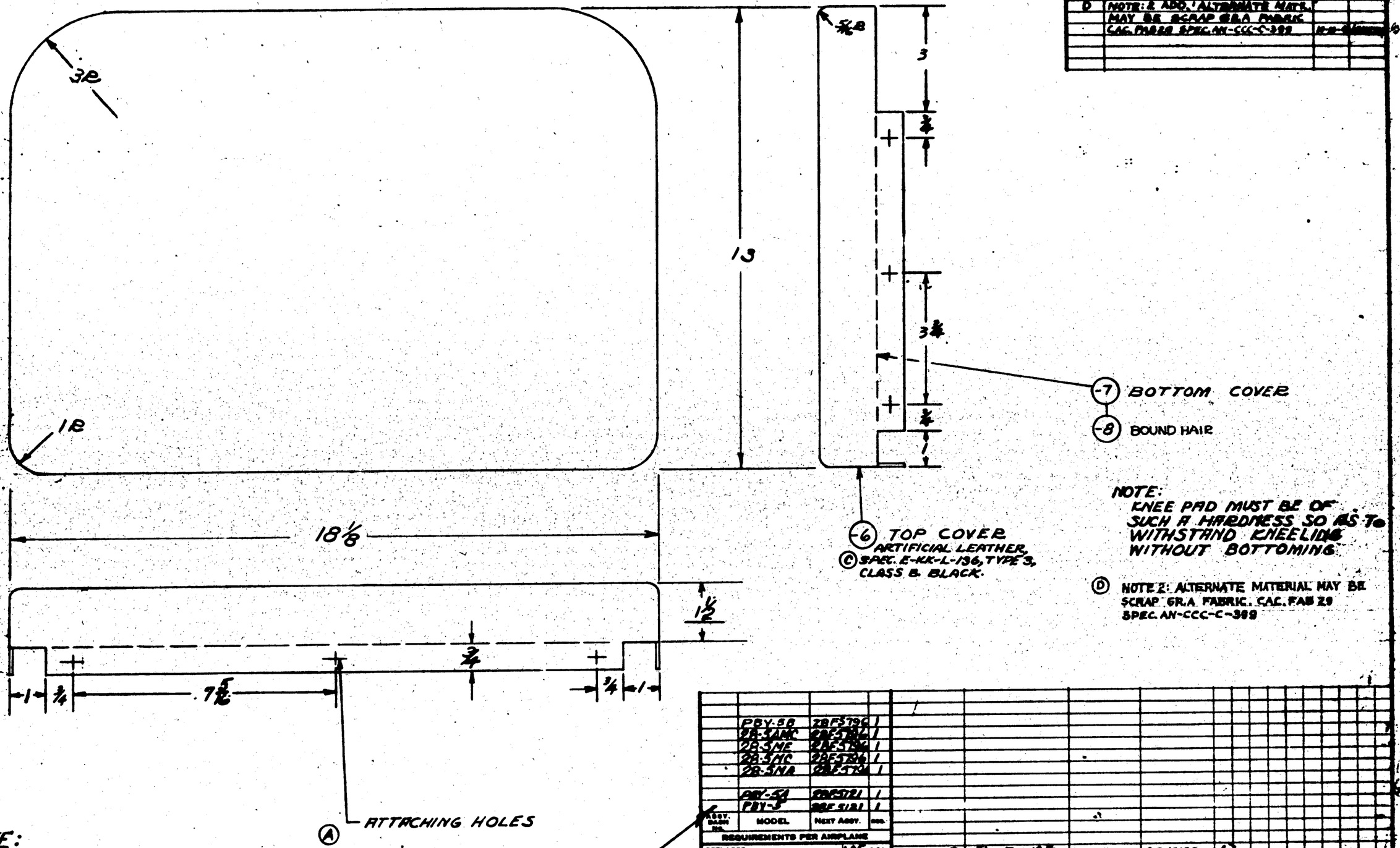

-7 BOTTOM COVER

-8 BOUND HAIR

-6 TOP COVER
ARTIFICIAL LEATHER, SPEC. E-KK-L-136, TYPE 3, CLASS B. BLACK.

NOTE:
KNEE PAD MUST BE OF SUCH A HARDNESS SO AS TO WITHSTAND KNEELING WITHOUT BOTTOMING

(D) NOTE 2: ALTERNATE MATERIAL MAY BE SCRAP GR.A FABRIC. CAC. FAB 29 SPEC. AN-CCC-C-389

(A) ATTACHING HOLES

NOTE:
THREAD, STICHING & SEAMS TO BE IN ACCORDANCE WITH FED. SPEC. DDD-S-751

MAKE PARTS FOR SERVICE INSTALLATION ON AIRPLANES #2289 TO #2312 INCL.
MAKE PARTS & INSTALL BY C.A.C. ON AIRPLANES #2313 TO #2488 INCL.
CONTRACT CHANGE "J"
J.O. 936-17

ASSY. DASH NO.	MODEL	NEXT ASSY.	QTY.
	PBY-5A	28F5796	1
	PB-3AMC	28F5796	1
	PB-3ME	28F5796	1
	PB-3MC	28F5796	1
	PB-3NA	28F5796	1
	PBY-5A	28F5121	1
	PBY-5	28F5121	1

REQUIREMENTS PER AIRPLANE

REPLACES — 0-45° CCL Calc. WT.

REPLACED BY — ACT. WT.

SCALE 6" = 1'-0"

STAMP PART NUMBER WHERE SHOWN

PART No.	STOCK	MATERIAL	SPEC.	LH REQ.	RH REQ.	LH REQ.	RH REQ.	LH REQ.	RH REQ.	LH/RH REQ.
-8	1 3/8 X 13 X 18 7/8	Sponge Hair	AC 16122	1						
-7	15 X 21	Artificial Leather	COWHIDE	1						
-6	1/4 X 18 1/4 X 23	NOTED	NOTED	1						

PARTS LIST PER ASSY.

-0 -2 -3 -4 -5

A.C. — NAVY — HEAT TREAT — FINISH

7-2-43 — DRAFT — CHECK — STRESS — MAT — APPROV — DATE

NAME KNEE PAD - FUEN - BOMBERS KNEE REST

CONSOLIDATED AIRCRAFT CORP. SAN DIEGO, CALIF.

ORIGINAL — SIZE D — 28F5123

E.O. 35487

LET	ALTERATION	DATE	BY
A	CHAMFER ADDED -7	3-[illegible]	[illegible]
B	SPOTWELD REPLACED BY RIVET AN442 -AD4. NEG WT. CHG.	9-21-42	[illegible]

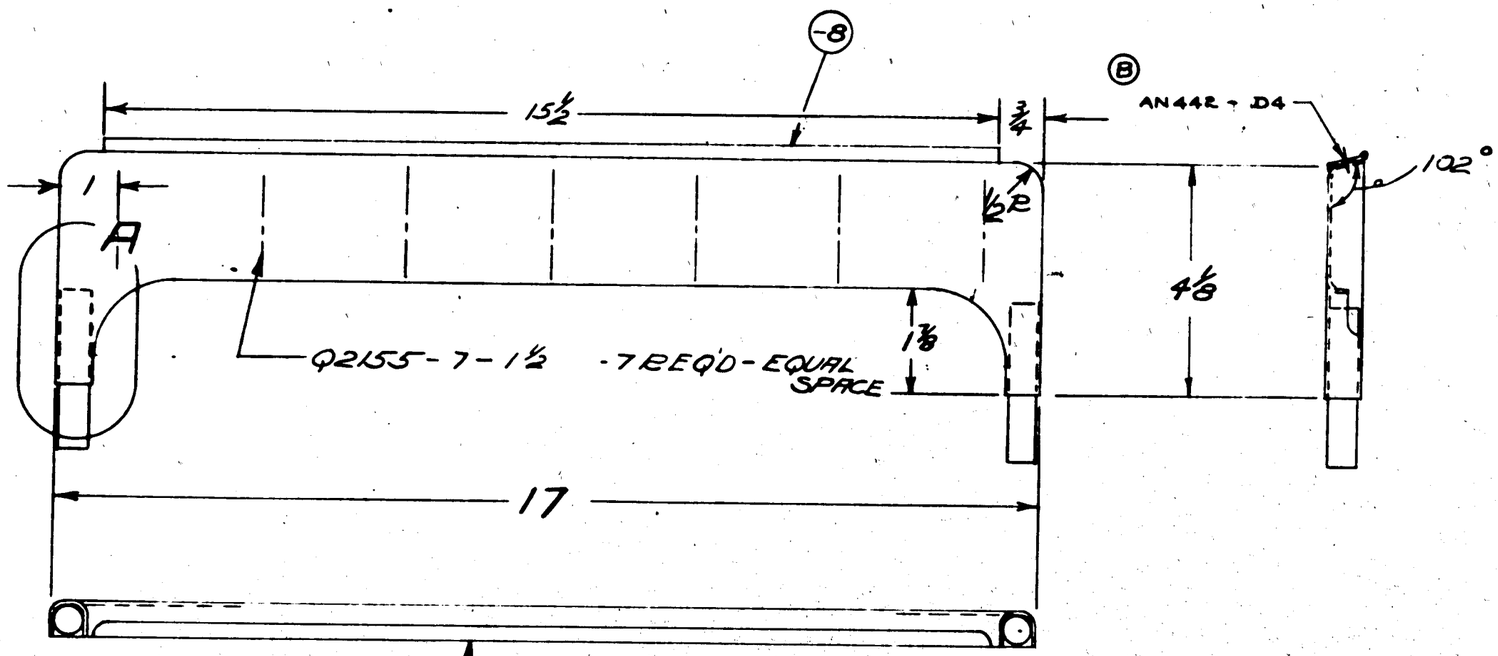

NOTE: ALL BEND RAD. 3/16 EXCEPT AS NOTED

GP-GREEN PRIME

FINISH CODE	
Z	ANODIC TRT TMENT
P	P-27 PRIMER
AP	ALUMINIZED PM
C	CADMIUM PLATE

PART DESIGNED FOR DROP HAMMER

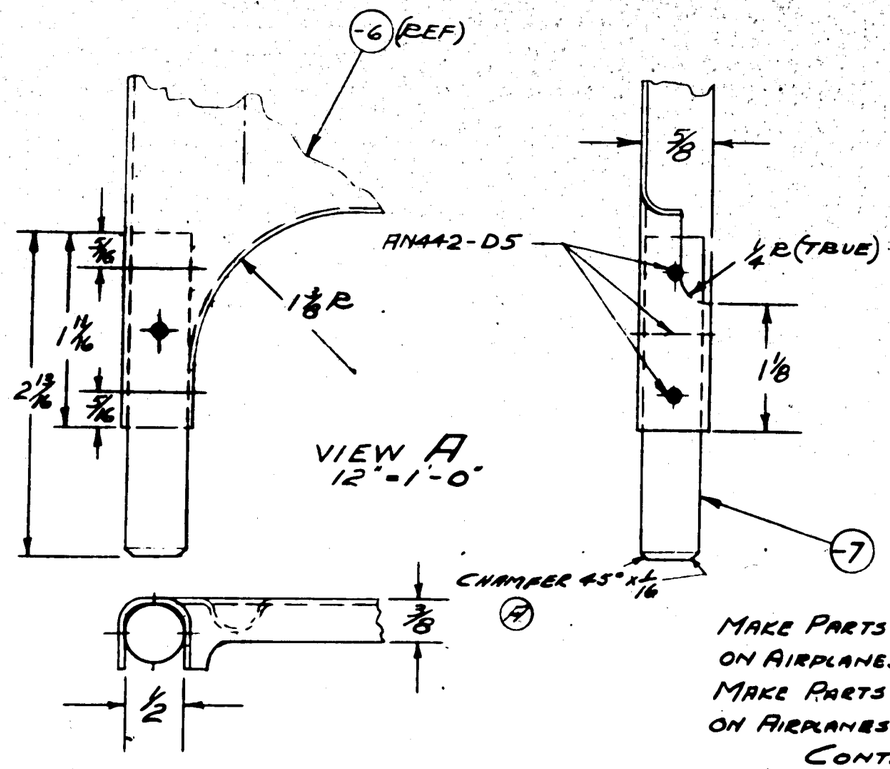

MAKE PARTS FOR SERVICE INSTALLATION ON AIRPLANES #2209 TO #2312 INCL.
MAKE PARTS & INSTALL BY C.A.C ON AIRPLANES #2313 TO #2408 INCL.
CONTRACT CHANGE "J"
S.O. 936-17

ASSY. DASH NO.	MODEL	NEXT ASSY.	REQ
	PBY-5A	28F5121	1
	PBY-5	28F5121	1

REQUIREMENTS PER AIRPLANE

REPLACES: A2 - C.L. CALC. WT.
REPLACED BY: AGT. WT.
LIGHT OR SHOWDOWNS UNLESS OTHERWISE SPECIFIED ± 1/32
SCALE 6" = 1'-0" & METRIC
STAMP PART NUMBER WHERE SHOWN

AN442-D4
AN442-D5

PART NO.	STOCK	MATERIAL	SPEC.	LH REQ. -0	RH REQ. -0	LH REQ. -2	RH REQ. -2	LH REQ. -3	RH REQ. -3	LH REQ. -4	RH REQ. -4	LH REQ. -5	RH REQ. -5
-8	Y56-A BTX 15½			1									
-7	½ DIA x 2¾	AL AL. ROD	4GA9-T	2									
-6	.051 x 9 x 22½	ALCLAD	4178-A	1									

PARTS LIST PER ASSY.

A.C. ALL CONS A
NAVY MAT-SPEC 0[illegible]
HEAT TREAT
FINISH: Z [illegible] - [illegible] GP
DRAFT: 7-5-42
CHECK: [illegible]
STRUCT: [illegible]
MAT: 7/4/42
APPROV.
ENG.

NAME BRACE ASSEM-FURN BOMBERS KNEE REST
OPP. HAND
CONSOLIDATED AIRCRAFT CORP. SAN DIEGO, CALIF.
DWG SIZE D
28F5126

LET	ALTERATION	DATE	BY
A	RELEASE AFTER PRERELEASE	7-18-44	

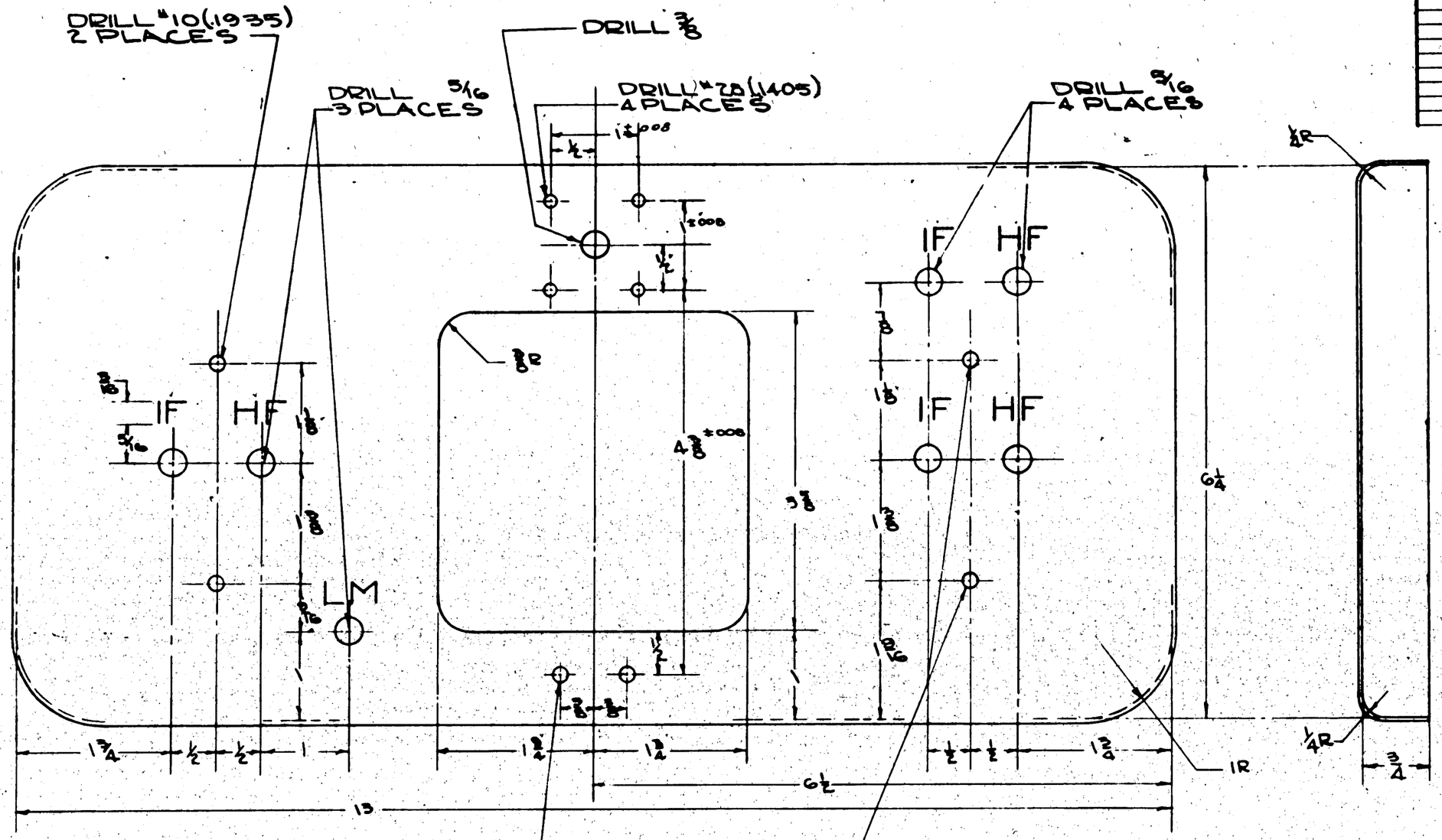

DBL-DULL BLACK LACQUER

FINISH CODE	
Z	ANODIC TREATMENT
P	P-27 PRIMER
AP	ALUMINIZED PRIMER
C	CADMIUM PLATE

NOTE:
STAMP 3/16" LETTERS AS SHOWN - FILL WITH WHITE PAINT

ASSY. DASH NO.	MODEL	NEXT ASSY.	REQ.
	PBY-5A	28F5130	1
	PBY-5	28F5130	1

REQUIREMENTS PER AIRPLANE

REPLACES — CALC. WT.

REPLACED BY — ACT. WT.

SCALE 12"=1'-0"

STAMP PART NUMBER WHERE SHOWN

PART NO.	STOCK	MATERIAL	SPEC.	LH REQ.	RH REQ.	LH REQ.	RH REQ.	LH REQ.	RH REQ.	LH REQ.	RH REQ.	LH REQ.	RH REQ.
PARTS LIST PER ASSY.	.090-12 X 18	ALCLAD 24S-O	47A10 Comm 1	-0		-2		-3		-4		-5	

AC — NAVY CONST SR-53 — HEAT TREAT

Z-P-DBL — FINISH

PDate 7-3-90 — DRAFT — CHECK — STRUCT — MAT — APPROV — ENG. — 7-17-44

NAME PANEL-F-RADIO OPERATORS CLOCK & ANT.

CONSOLIDATED AIRCRAFT CORP. SAN DIEGO, CALIF.

OPP. HAND

DWG SIZE D

28F5128

FF R

LET	ALTERATION	BY	DATE
A	CHANGE RAD FROM 1/8 TO 1/16	[illegible]	[illegible]
B	ADD NOTE TO PIECE OF MATERIAL	DCB	"
C	-6 WAS CALLED FOR AS [illegible]	[illegible]	[illegible]
	MATERIAL SPEC. WAS DOST		
	CHANGED M.S. SPEC.		
D	ADDED NOTE TO PIECE OF MATERIAL FOR -7 "RECLAIMED SPONGE RUBBER" CHANGED TO "REVISED FROM M.S. 3 PIECE RUBBER K-14" W.E.C.M.S. INC.		9-12-42 [illegible]

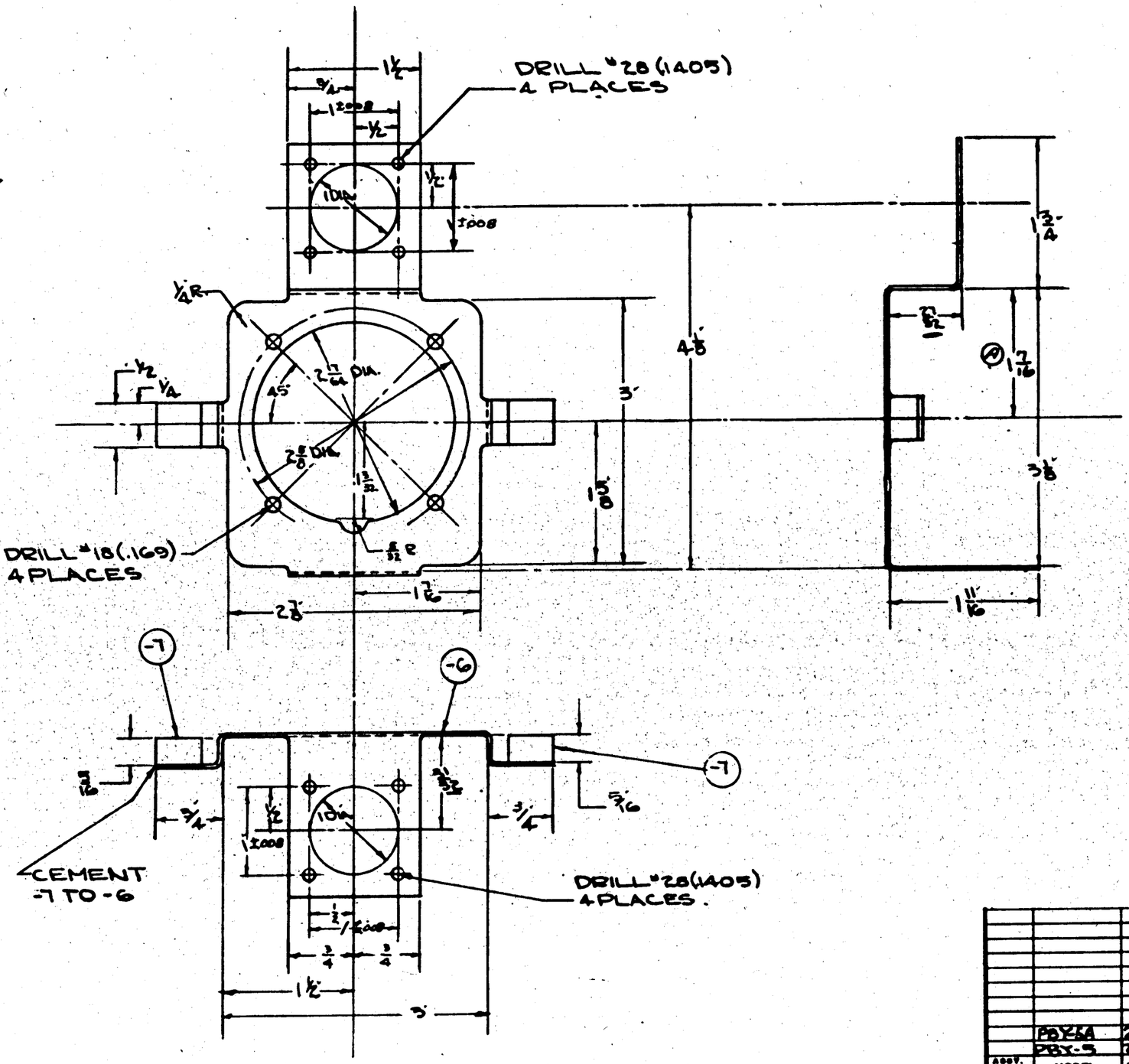

ALL BEND RADII 1/8

NOTE:
(D) MATERIAL FOR -7 RECLAIMED SPONGE RUBBER AC SPEC 26578, GRADE B.

DBL - DULL BLACK LACQUER

FINISH CODE	
Z	ANODIC TREATMENT
P	P-27 PRIMER
AP	ALUMINIZED PRIMER
C	CADMIUM PLATE

ASSY. DRAW. NO.	MODEL	NEXT ASSY.	REQ.
	PBY-5A	28F5130	1
	PBY-5	28F5129	1

REQUIREMENTS PER AIRPLANE

REPLACES — CHG. QTY.

REPLACED BY — ADV. QTY.

SCALE 12"-1'-0"

STAMP PART NUMBER & MODEL ON PATTERN

PART NO. (C)	STOCK	MATERIAL	SPEC.	-0 REQ.	-2 REQ.	-3 REQ.	-4 REQ.	-5 REQ.
-7	5/16 x 1/2 x 1/2	NOTED	NOTED	2				
28F5129 -6	.051 x 5 x 8	3400 AL ALLOY	47 A10 CLASS A	1				

PARTS LIST PER ASSY.

AC

HEAT TREAT (C) — SR-53 — FINISH — Z-P-20BL

DRAFT — CHECK — STRUCT. — MAT — APPROV. — ENG.

NAME SUPPORT-F-CLOCK-RADIO OPERATOR

CONSOLIDATED AIRCRAFT CORP. SAN DIEGO, CALIF.

OPP. HAND

SIZE D — DWG. 28F5129

R

LET	ALTERATION	DATE	BY
F	TRACED & BROUGHT UP TO DATE 1/8 R. WAS 1/16 R; 3/32 R WAS 1/16 R; 9/16 R WAS 1/4 R.	9/6/40	CRAIN

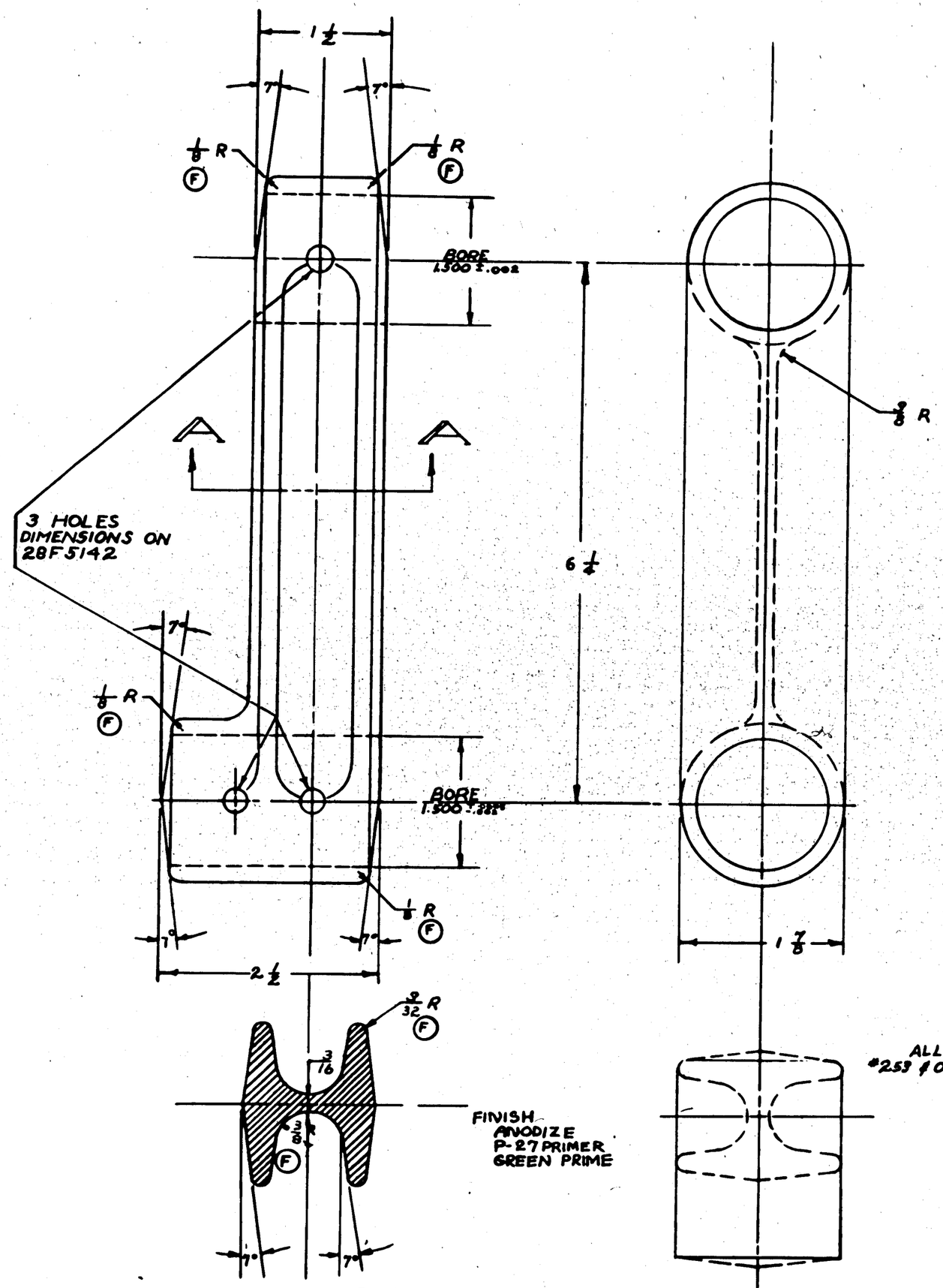

SECTION A-A

NOTE:
FOR ALTERNATE STEEL WELDED ASS'Y SEE 28F3134.

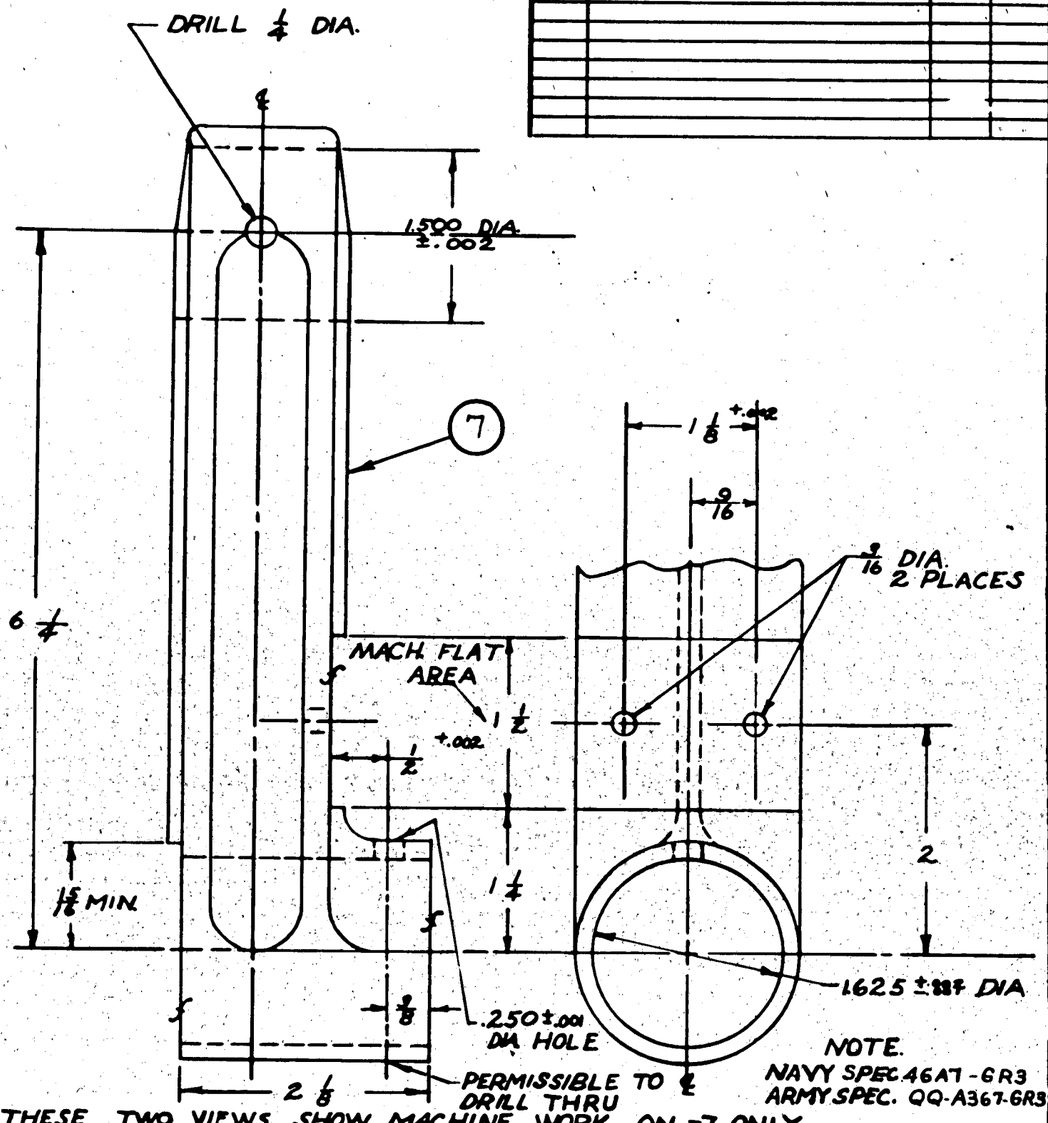

NOTE.
NAVY SPEC. 46A7-GR3
ARMY SPEC. QQ-A367-GR3

THESE TWO VIEWS SHOW MACHINE WORK ON -7 ONLY

ASSY. DASH NO.	MODEL	NEXT ASSY.	REQD.
-0	28-5AMN	28F5142	1
-0	28-5MN	28F5142	1
-0	PBY-5A	28F5142	1
-7	B-24E	32F4386	1
-7	B-24D	32F4386	1
-0	PBY-5	28F5142	1

REQUIREMENTS PER AIRPLANE

REPLACES 28F5149 (7/25/40) — 7.430 CALC WT.
REPLACED BY — ACT. WT.
UNLESS OTHERWISE DESIGNATED ± 1/32 — SCALE 12" = 1'0"
STAMP PART NUMBER WHERE SHOWN

PART NO.	STOCK	MATERIAL	SPEC.	LH REQ.	RH REQ.	LH REQ.	RH REQ.	LH REQ.	RH REQ.	LH REQ.	RH REQ.	LH REQ.	RH REQ.
PARTS LIST PER ASSY.				-0		-2		-3		-4		-5	
-7	MAKE FROM ROUGH FORGING		NOTED	1									
-8	FORGING (ROUGH) ALALASIST		NOTED			1							

AC		CHERRY						
NAVY 44,000 #/0"	Z P-6P	7/25/40	STUCK		9/6/40	9/6/40		
HEAT TREAT	FINISH	DRAFT	CHECK	STRUCT	MAT	APPROV	ENG.	

NAME LEG EXTENSION - FURN'S BOMBER'S SEAT.
OPP. HAND
CONSOLIDATED AIRCRAFT CORP. SAN DIEGO, CALIF.
DWG. D SIZE 28F5143

28F5143 R

LET	ALTERATION	DATE	BY
A	ADDED TOLERANCES FOR LENGTH & WIDTH DIMENS. & ADDED TO NOTE	1-11-41	
B	CHG'D MATL FROM "AIRFOAM RUBBER" TO "BOUND HAIR"; SPEC FROM C.A.C. TO AC.16122; ELIMINATED NOTE "CUSHION ASSEMBLY" & REMOVED LIGHTENING HOLES & NOTES "LAYOUT---PRACTICE" & "MAY---EQUIV." - AC-CHG ACS	5-28-41	CBW

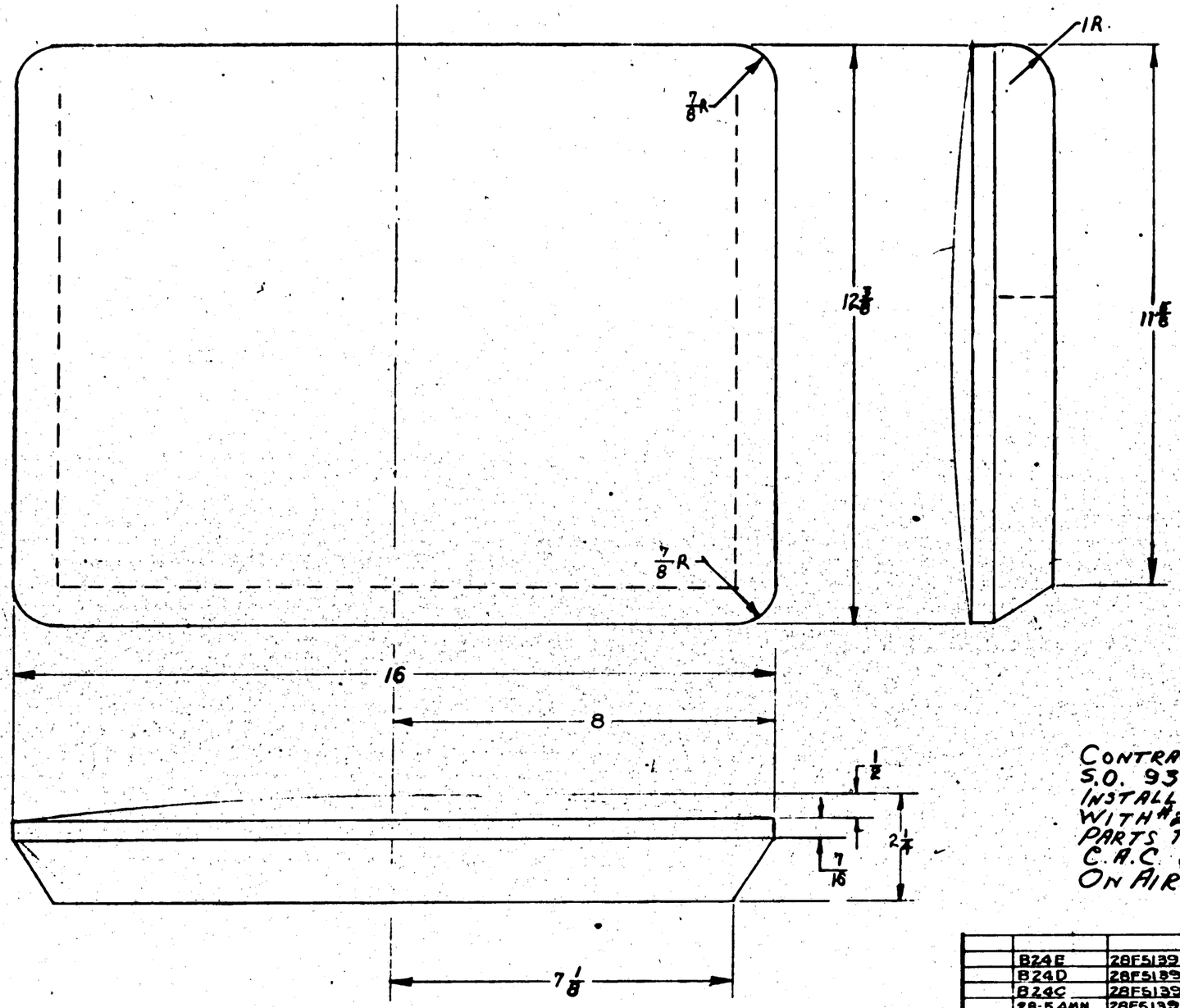

CONTRACT CHANGE "J"
S.O. 936-19
INSTALL. BY C.A.C. TO START WITH #25 PBY-5 AIRPLANE.
PARTS TO BE FURNISHED BY C.A.C. & INSTALLED BY NAVY ON AIRPLANES #1 TO #24 INCL.

TOLERANCES:-
LENGTH & WIDTH +1/2, -1/4
THICKNESS ±1/8

ASSY. BASH No.	MODEL	NEXT ASSY.	REQ.
	B24E	28F5139	2
	B24D	28F5139	2
	B24C	28F5139	2
	28-5AMN	28F5139	2
	28-5AMC	28F5139	2
	28-5MN	28F5139	2
	28-5MC	28F5139	2
	PBY-5A & B	28F5139	2 EA
	PBY-5	28F5139	2

REQUIREMENTS PER AIRPLANE

REPLACES — 1.500 Galv. Wt.

REPLACED BY — Adv. Wt.

LAST OR BEGINNING UNLESS OTHERWISE SPECIFIED ± NOTED

SCALE 6" = 1'-0"

STAMP PART NUMBER WHERE SHOWN

PURCHASE TO DWG.

PART No.	STOCK	MATERIAL	SPEC.		LH REQ.	RH REQ.	LH REQ.	RH REQ.	LH TRIM REQ.	RH TRIM REQ.	LH REQ.	RH REQ.
-4	1	BOUND HAIR	AC.16122	1	-0	-2	-3	-4	-5			

PARTS LIST PER ASSY.

AC —
NAVY NONE — NONE
HEAT TREAT — FINISH

DRAFT	CHECK	STRUCT.	DAY	APPROV.	DRG.
					10

NAME SEAT CUSHION — FURN'S. WAIST GUNNER'S

OPP. HAND —

CONSOLIDATED AIRCRAFT CORP. SAN DIEGO, CALIF.

SIZE D — 28F5144

R

LET	ALTERATION	DATE	BY
A	"A" WAS 12 7/16. ADDED TABULATION CHART. ADDED -2 & -3 FOR PBY-5A R&D.		
B	ADDED NOTE FOR CONTRACT CHANGE "0" FOR PBY-5A		
C	CHANGED 0-2 & 3 FROM .030-24ST(47A10T)AL ALLOY TO 0.030-24SO(47A10A)AL ALLOY ADDED HEAT TREAT SR-53 NO WT. CHANGE	3-21-42	[illegible]

Ⓐ

DASH NO	A
-0	12 11/16
-2	20 11/16
-3	8 11/16

NOTE:

PBY-5 CONTRACT CHANGE "0", S.O. 936-24 TO BE INSTALLED BY C.A.C. ON AIRPLANES #49 TO #167 INCL. (SERIAL NOS. 2337 TO 2455 INCL.)
PARTS TO BE FURNISHED BY C.A.C. & INSTALLED BY NAVY ON AIRPLANES #1 TO #48 INCL. (SERIAL NOS. 2289 TO 2336 INCL.)

Ⓑ

PBY-5A CONTRACT CHANGE "0" S.O. 936-24 TO BE INSTALLED BY C.A.C ON AIRPLANES #168 TO 200 INCL. (SERIAL NOS. 2456 TO 2488 INCL.).

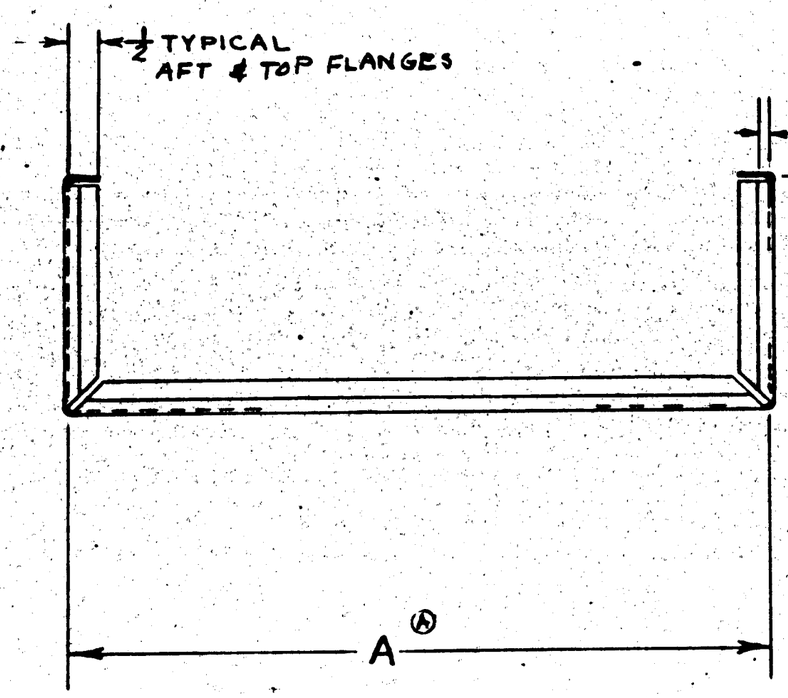

SEE NOTE

NOTE
ALL BEND RADII & RELIEF TO BE 1/16

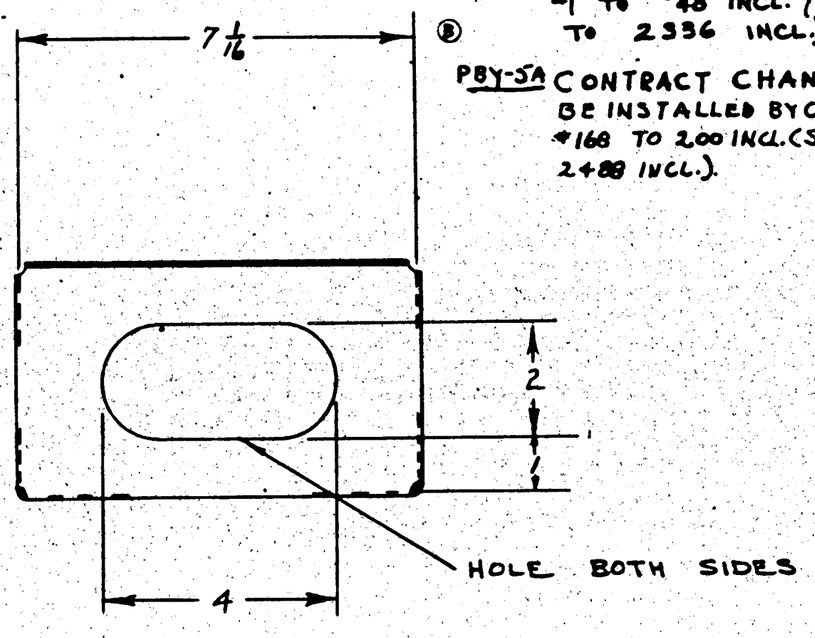

RELEASED AS PER CONTRACT #91876

FINISH CODE	
Z	ANODIC TREATMENT
P	P-17 PRIMER
AP	ALUMINIZED PRIMER
C	CADMIUM PLATE

ASSY DASH NO.	MODEL	NEXT ASSY	REQ.
-2	PBY-5A	28F5203	1
-3	PBY-5A	28F5203	1
-0	PBY-5	28F5164	1

REQUIREMENTS PER AIRPLANE

REPLACES .45 CALC. WT.

REPLACED BY ACT. WT.

UNLESS OTHERWISE SPECIFIED SCALE 1/2 6"= 1'0"

STAMP PART NUMBER WHERE SHOWN

PART NO	STOCK	MATERIAL	SPEC.	LH REQ.	RH REQ.	LH REQ.	RH REQ.	LH REQ.	RH REQ.
PARTS LIST PER ASSY.				-0	-2	-3	-4	-5	
-3	030 x 8 1/4 x 18	AL. ALL.	47A10 A			4		4	
-2	030 x 8 1/4 x 30	"	47A10 A		4		4		
-0 -4 -5	030 x 8 1/4 x 22	AL. ALL.	17ST A	4					

AC

NAVY SR-53 HEAT TREAT

Z-P-AP FINISH

C 6-12-42 DRAFT

NAME SHELF - FURNS - OXYGEN CANISTER STOWAGE-LOWER

CONSOLIDATED AIRCRAFT CORP. San Diego, Calif.

OFF. NAME

SIZE D CODE 28F5163

R

LET	ALTERATION	DATE	BY

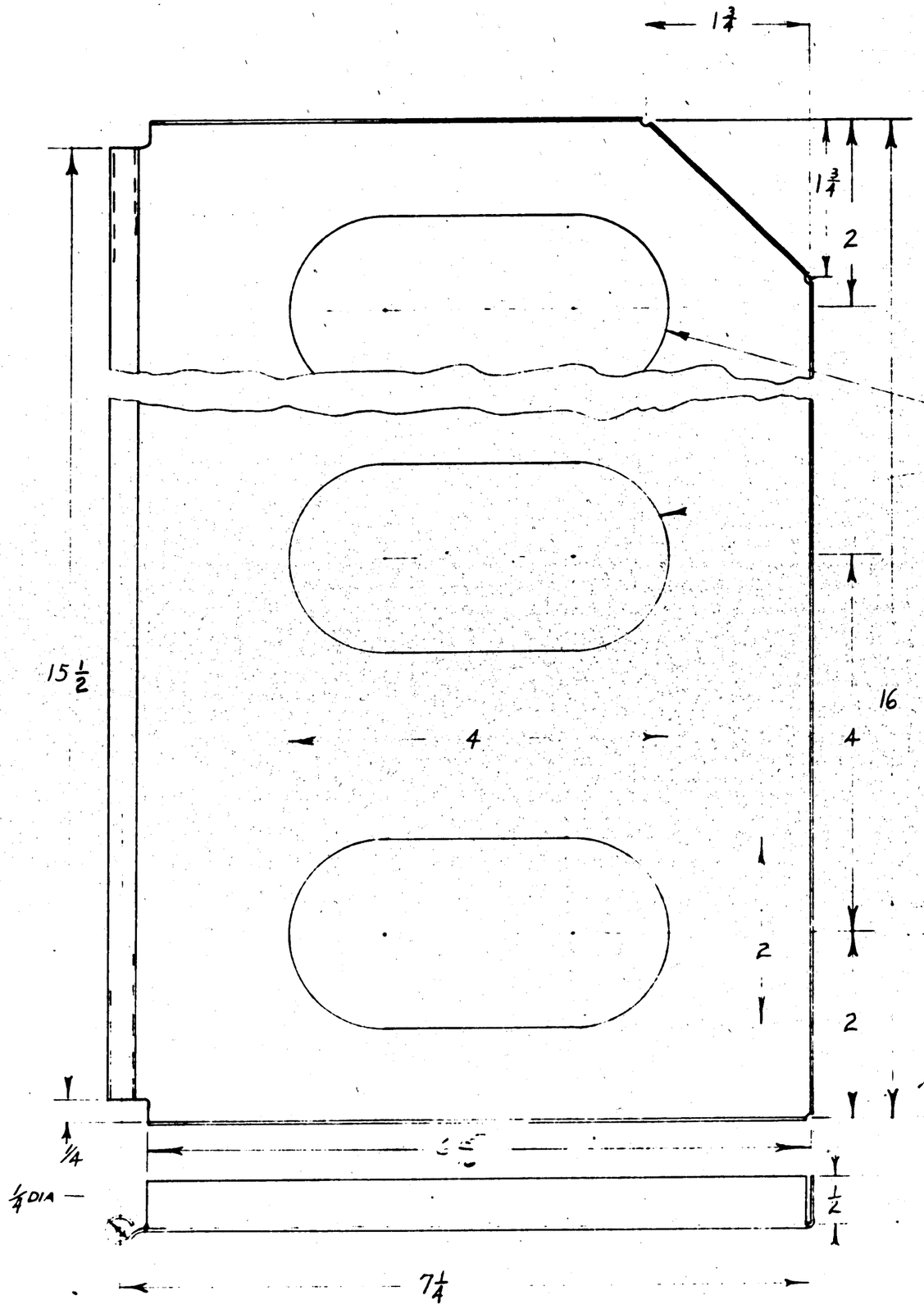

NOTE:
CONTRACT CHANGE "B" S.O. 936-24 TO BE INSTALLED BY C.A.C. ON AIRPLANES #49 TO #167 INCL. (SERIAL NOS. 2337 TO 2485 INCL.) PARTS TO BE FURNISHED BY C.A.C. & INSTALLED BY NAVY ON AIRPLANES #1 TO #48 INCL. (SERIAL NOS. 2289 TO 2336 INCL.)

RELEASED AS PER CONTRACT #91876

ALL BEND RADII & RELIEF TO BE 1/16 EXCEPT AS NOTED

ASSY DASH NO.	MODEL	NEXT ASSY	REQ.
	PBY-5	28F5164	14

SEE NOTE

REQUIREMENTS PER AIRPLANE

REPLACES — CALC. WT .18

REPLACED BY — ACT WT

LIMIT OR DIMENSIONS UNLESS OTHERWISE SPECIFIED ± 1/32

SCALE 12" = 1'-0

STAMP PART NUMBER WHERE SHOWN

PART NO	STOCK	MATERIAL	SPEC.	LH REQ. -0	RH REQ. -2	LH REQ. -3	RH REQ. -4	LH REQ. -5	RH REQ.
	-6 .020 x 9 x 18	AL ALLOY	47A10 T	1					

PARTS LIST PER ASSY.

A C
NAVY NONE — Z-P-AP
HEAT TREAT — FINISH

	DRAFT	CHECK	STRUCT	MAT	APPROV	ENG.
PARKER	3-16-40					

NAME PARTITION - FURN'S - OXYGEN CANISTER STOWAGE

OPP. HAND

CONSOLIDATED AIRCRAFT CORP. SAN DIEGO, CALIF.

SIZE D — 28F5165

K DD

PBY5

LET	ALTERATION	DATE	BY
A	ADDED -7 & -8 PARTS TO DWG & B/M.	1-17-41	D. HIBBEN
B	REVERSED -7	2-7-41	R. RYERSON

NOTE
CONTRACT CHANGE "O" SO. 936-24 TO BE INSTALLED BY C.A.C. ON AIRPLANES #49 TO #167 INCL. (SERIAL NOS. 2337 TO 2455 INCL.) PARTS TO BE FURNISHED BY C.A.C. & INSTALLED BY NAVY ON AIRPLANES #1 TO #48 INCL. (SERIAL NOS. 2289 TO 2336 INCL.)

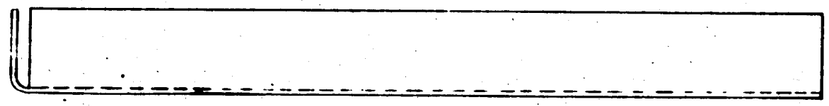

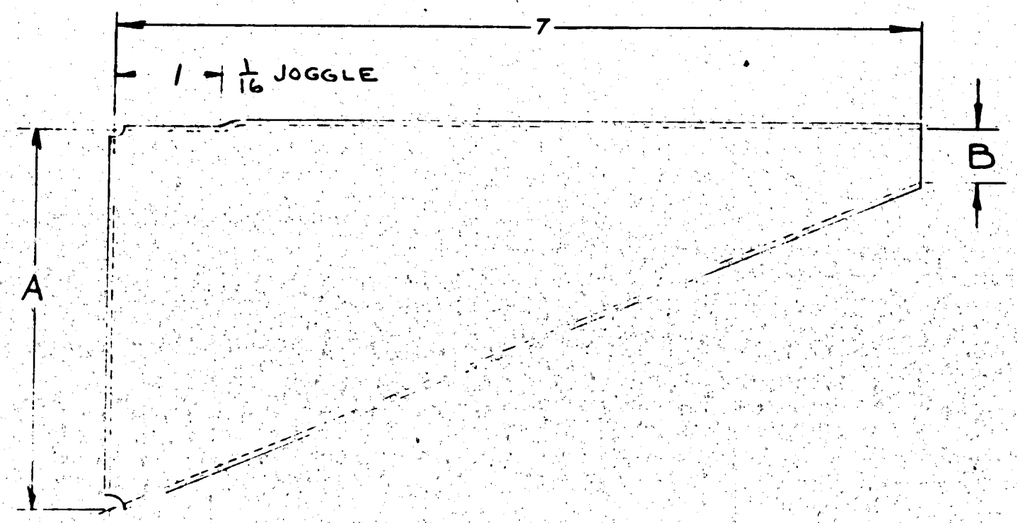

ALL BEND RADII AND BEND RELIEF 1/8

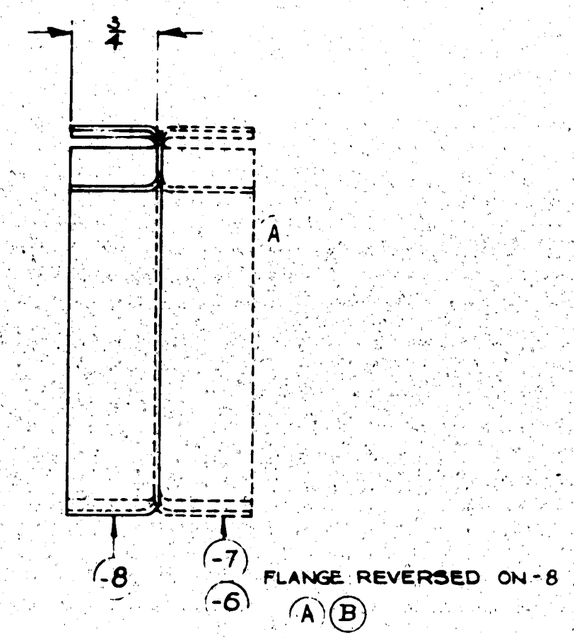

FLANGE REVERSED ON -8

RELEASED AS PER CONTRACT #91876

DASH NO	A	B
-6	3 5/16	1/2
-7	3 3/4	5/8
-8	4 3/16	1 1/4

A

SEE NOTE

ASSY DASH NO.	MODEL	NEXT ASSY	REQ.
-8	PBY-5	28F5161-2	1
-8	PBY-5	28F5161	1
-7	PBY-5	28F5161-2	1
-7	PBY-5	28F5161	1
-6	PBY-5	28F5161-2	1
-6	PBY-5	28F5161	1

REQUIREMENTS PER AIRPLANE

REPLACES .11 LBS. CALC. WT.

REPLACED BY ACT. WT.

LIMIT OF DIMENSIONS UNLESS OTHERWISE SPECIFIED ± 1/32

SCALE 12" = 1'0"

STAMP PART NUMBER WHERE SHOWN

PART No	STOCK	MATERIAL	SPEC.	LH REQ. -0	RH REQ. -2	LH REQ. -3	RH REQ. -4	LH REQ. -5	RH REQ.
-5	.051 x 6 R 8	AL. ALLOY SHT	47A10 T						
-7	.051 x 5 1/2 R 8	AL. ALLOY SHT	47A10 T						
-8	.051 x 5 R 8	AL. ALLOY SHT.	47A10 Clad T						

PARTS LIST PER ASSY.

AC —
NAVY NONE — Z-P-AP
HEAT TREAT — FINISH

I.H. INSPECTION — DRAFT — CHECK — STRUCT. — MAT. — APPROV. — ENG.

NAME SUPPORT-FURN'S-OXYGEN CANISTER STOWAGE.

CONSOLIDATED AIRCRAFT CORP. SAN DIEGO, CALIF.

OPP. HAND

DWG. SIZE D

28F5166

R

LET	ALTERATION	DATE	BY
E	DWG REVISED & REDRAWN	8-5-42	[illegible]
F	AN820-6 WAS NAS1107D		
	NO WT. CHG.	2/6/43	[illegible]
G	IN ELEV. CHANGED SK1213-110 & SK1213-90 TO AGREE WITH LATEST DWG. NO WT CHG.	2/6/43	[illegible]
H	REMOVE NAF 213690-6D SLEEVE (2) & RETURN TO STOCK; WAS REMOVE UPPER SLEEVE NAF 213690-6D & REPLACE WITH CAP AN820-6 WT. CHG. NEG.	9-10-43	[illegible]

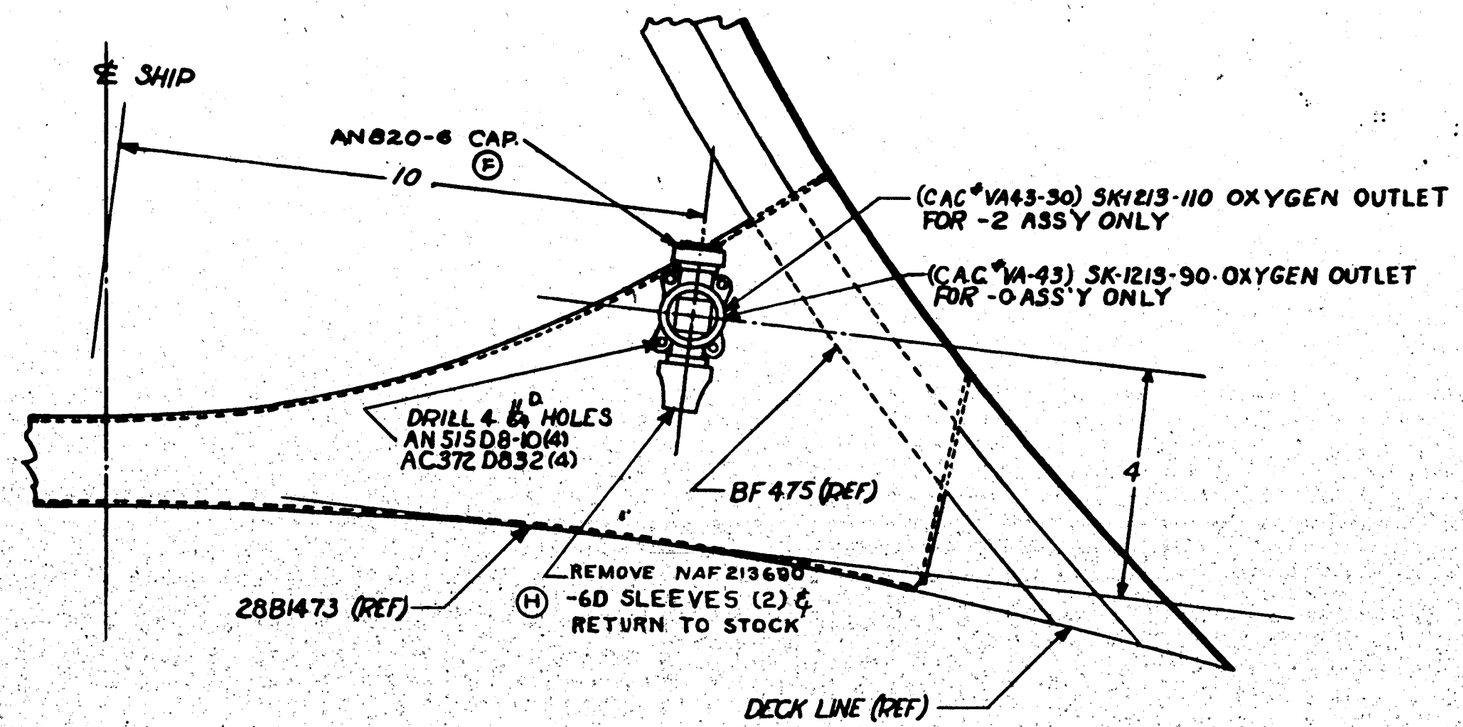

PORT SIDE - LOOKING AFT

FINISH CODE	
Z	ANODIC TREATMENT
P	P-27 PRIMER
AP	ALUMINIZED PRIMER
C	CADMIUM PLATE

RELEASED AS PER CONTRACT #91876

*MAY BE PURCHASED FROM THE MINES SAFETY APPLIANCE CO. PITTSBURGH, PA., U.S.A.

C#91876 & ON
C#70496

CONTRACT CHG "O" S.O. 936-24 TO BE INSTALLED BY C.A.C. ON AIRPLANES #49-200 INCL. (SERIAL NO'S 2337 TO 2488 INCL.) PARTS TO BE FURNISHED BY CAC & INSTALLED BY NAVY ON AIRPLANES #1 TO #48 INCL. (SERIAL NO'S 2289 TO 2336 INCL.)

DO NOT FINISH OXYGEN OUTLETS SK-1213-90 & SK-1213-110 (REF)

ASSY. DASH NO.	MODEL	NEXT ASSY.	REQD.
-2	PBY-5	28F5156	1
-2	PBY-5A	28F5200	1
-0	PBY-5	28F5156	1

REQUIREMENTS PER AIRPLANE

REPLACES 28F5201 ord 9-27-41 — .25 CALC. WT.

REPLACED BY — AGY. WT.

UNLESS OTHERWISE SPECIFIED ± 1/16 — SCALE 6" = 1'-0"

STAMP PART NUMBER WHERE SHOWN

PART No.	STOCK	MATERIAL	SPEC.	LH REQ. -0	RH REQ. -0	LH REQ. -2	RH REQ. -2	LH REQ. -3	RH REQ. -3	LH REQ. -4	RH REQ. -4	LH REQ. -5	RH REQ. -5
PARTS LIST PER ASSY.													
-6													
AN820-6				1	1								
AN515D8-10				4	4								
AC372D832				4	4								
*SK-1213-110 C.A.C. #VA43-30				—		1							
*SK-1213-90 C.A.C. #VA-43				1		—							

A.C.		Rel CASSIE	P
NAVY NONE	ZAP	3-3-43	JRM
HEAT TREAT	FINISH	DRAFT CHECK STRUCT ENGR.	APPROV ENG.

NAME INSTALL'N FURNS. MECHANICS OXYGEN OUTLET

OPP. HAND NONE

CONSOLIDATED AIRCRAFT CORP. San Diego, Calif.

SIZE D — 28F5201

R

LET	ALTERATION	DATE	BY
A	CHG'D. ANGLE OF LEG IN FORGING PORTION	10-5-40	[illegible]
B	ADDED PARTING LINE & NOTE "FOR ACFO DRAFT"	"	"
C	LOWER LUG ℄ WAS $\frac{7}{16}$ FROM UPPER BOSS ℄	10-7-40	[illegible]
D	PART WAS "DRAWN AS L.H. & RH.-REMOVED L.H. PORTION TO MAKE PART SYM. ABOUT LUG ℄		
E	FORGING OUTLINE ADDED	10-24-40	PASCO
F	ADDED ½ DIMS NO WT. CHG	6-6-41	EME
G	ADDED "MAT'L" X4130 & "SPEC" AN-QQ-S-684 NO WT. CHG	7/25/42	[illegible]

FORG. NOT AFF

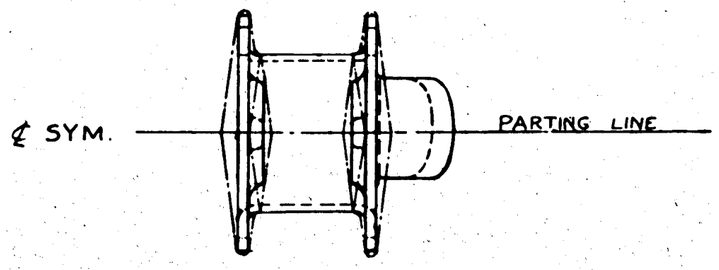

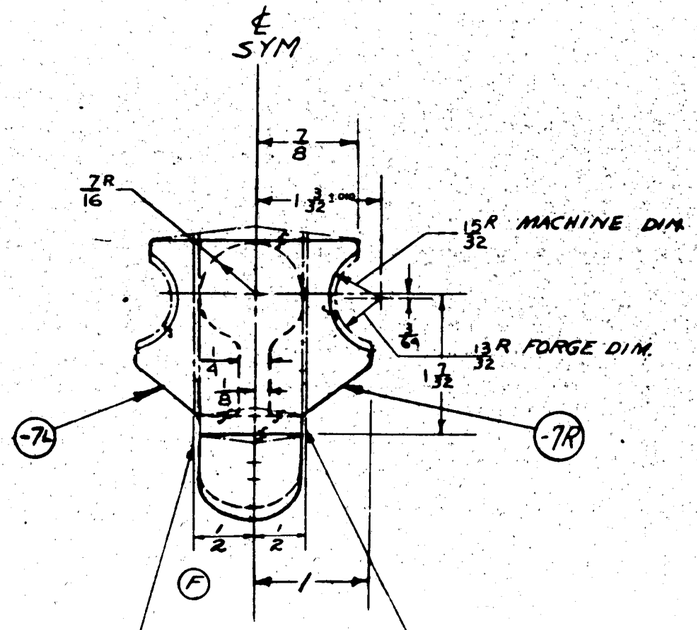

MAKE -7L BY SAWING ALONG THIS LINE.
MAKE -7R BY SAWING ALONG THIS LINE.

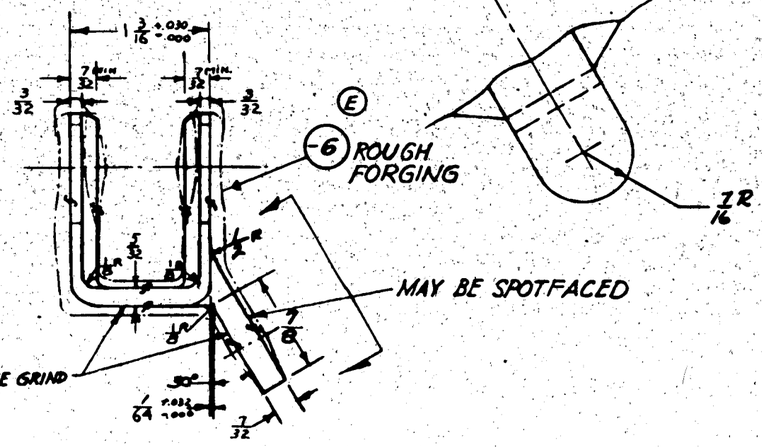

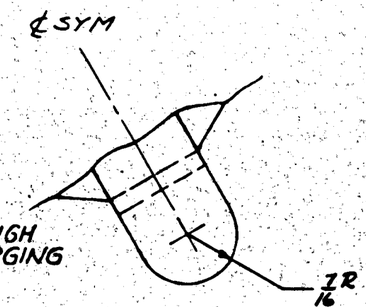

* PBY-5 — 65 ℄ ON
△ 28-5ME — 27 ℄ ON

NOTE-
ALL FILLETS $\frac{3}{16}$ RADIUS EXCEPT AS NOTED
DRAFT ANGLE = 7°

ASSY. DASH NO.	MODEL	NEXT ASSY	REQ.	
-7R	28-5ME & AMR	28F5219	1	
-7L	28-5ME & AMR	28F5219	1	
-7R	28-5ME & AMR & STAMP	28F5219	1	
-7L	28-5ME & AMR & STAMP	28F5219	1	
-7R	28-5ME	28F5219	1	
-7L	28-5ME	28F5219	1	△
-7R	PBY-5A&B	28F5219	1	
-7L	PBY-5A&B	28F5219	1	
-7R	PBY-5	28F5219	1	*
-7L	PBY-5	28F5219	1	

REQUIREMENTS PER AIRPLANE

REPLACES — 33 CALC. WT.
REPLACED BY — ACT. WT.

UNLESS OTHERWISE SPECIFIED: + $\frac{1}{32}$ −
SCALE 12" = 1'-0"
STAMP PART NUMBER WHERE SHOWN

PART No.	STOCK	MATERIAL	SPEC.	LH REQ.	RH REQ.	LH REQ.	RH REQ.	LH REQ.	RH REQ.	LH REQ.	RH REQ.	LH REQ.	RH REQ.
-7R	MAKE FROM -6												
-7L			X4130										
-6	FORGING	C.M.STL	AN-QQ-S-684										
PARTS LIST PER ASSY.				-0		-2		-3		-4		-5	

AC — STRESS
NAVY ANNEAL — NONE — 8-6-40 — Green 9/5/40
HEAT TREAT — FINISH — DRAFT — CHECK — STRUCT. — MAT — APPROV. — ENG.

NAME BRACKET - STIRRUP - TUNNEL GUN
OPP. HAND
CONSOLIDATED AIRCRAFT CORP. SAN DIEGO, CALIF.
DWG. SIZE D
28F5218

LET	ALTERATION	DATE	BY
AN	47A10A WAS 47A10T	11/14/42	WAKE
	ADDED HEAT TREAT SR53	11/20/42	WAKE
BN	ADDED DIM. 1½ & 3¾ TO FLANGE	5-20-43	TAPPAN
CN	1½ & 3¼ FLANGE WAS ON OPPOSITE SIDE	9-18-43	SELCH

E.O. 27440A
E.O. A 14934 PBY-5A, OA-10
P E.O. A 13696

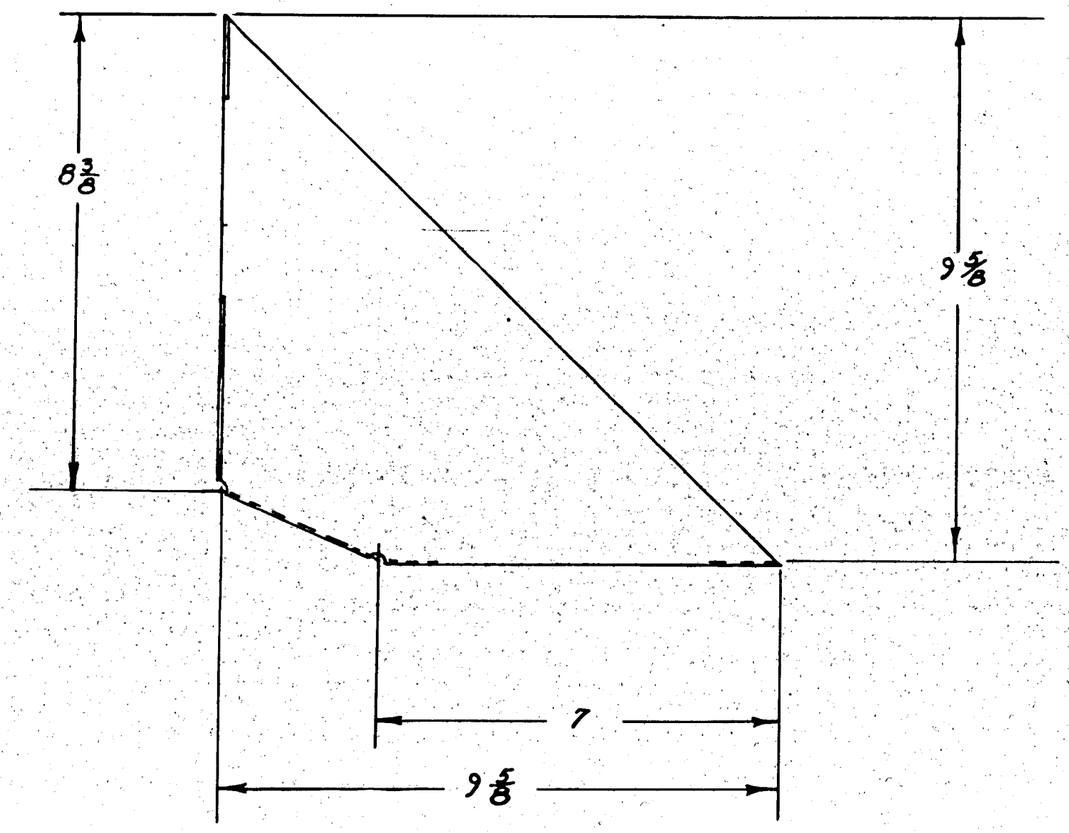

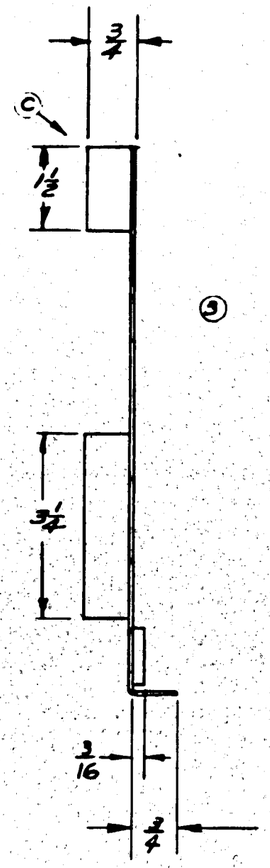

9

NOTE

ALL BEND RADII & RELIEF 1/16

CONTRACT CHANGE "O", S.O. 936-24 TO BE INSTALLED BY C.A.C. ON AIRPLANES #168 TO #200 INCL. (SERIAL NOS. 2456 TO 2488 INCL)

FINISH CODE	
Z	ANODIC TREATMENT
P	P-27 PRIMER
AP	ALUMINIZED PRIMER
C	CADMIUM PLATE

ASSY. DASH NO.	MODEL	NEXT ASSY	REQ
-0	OA-10	28F5204	1
-0	PBY-6A	28F5204	1

REQUIREMENTS PER AIRPLANE

REPLACES — CALC WT. .15

REPLACED BY — ACT. WT.

LIGHT OR DIMENSIONS UNLESS OTHERWISE SPECIFIED ± 1/32 — SCALE 6"=1'0"

STAMP PART NUMBER WHERE SHOWN

PART No.	STOCK	MATERIAL	SPEC.	LH REQ.	RH REQ.	LH REQ.	RH REQ.	LH REQ.	RH REQ.	LH REQ.	RH REQ.	LH REQ.	RH REQ.
	.030 X 11 X 11	AL ALLOY	17A10A										
PARTS LIST PER ASSY.				-0		-2		-3		-4		-5	

AC — NAVY 3R53 HEAT TREAT — Z-P FINISH — DRAFT C. GARNER 10-1-40 — CHECK — STRUCT — STA — APPROV. — ENG.

NAME BRACKET - FURNS. - OXY. CANISTER STOW - LOWER

CONSOLIDATED AIRCRAFT CORP. SAN DIEGO, CALIF.

OPP. HAND

DWG. SIZE D — 28F5223

R

LET	ALTERATION	DATE	BY

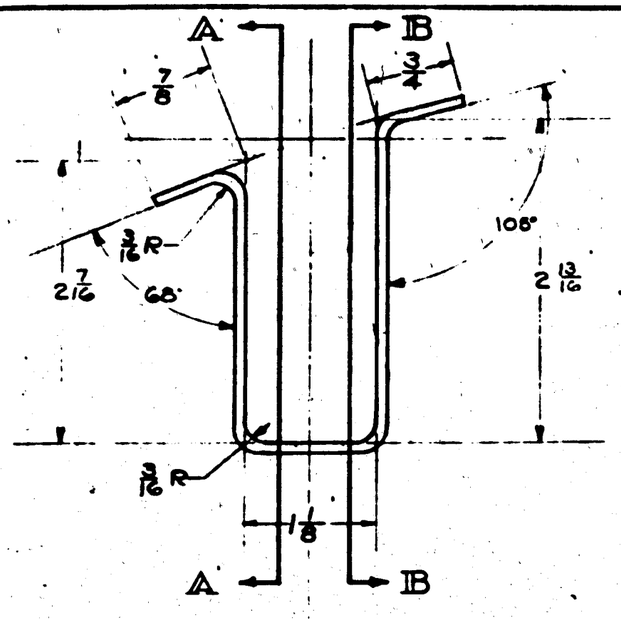

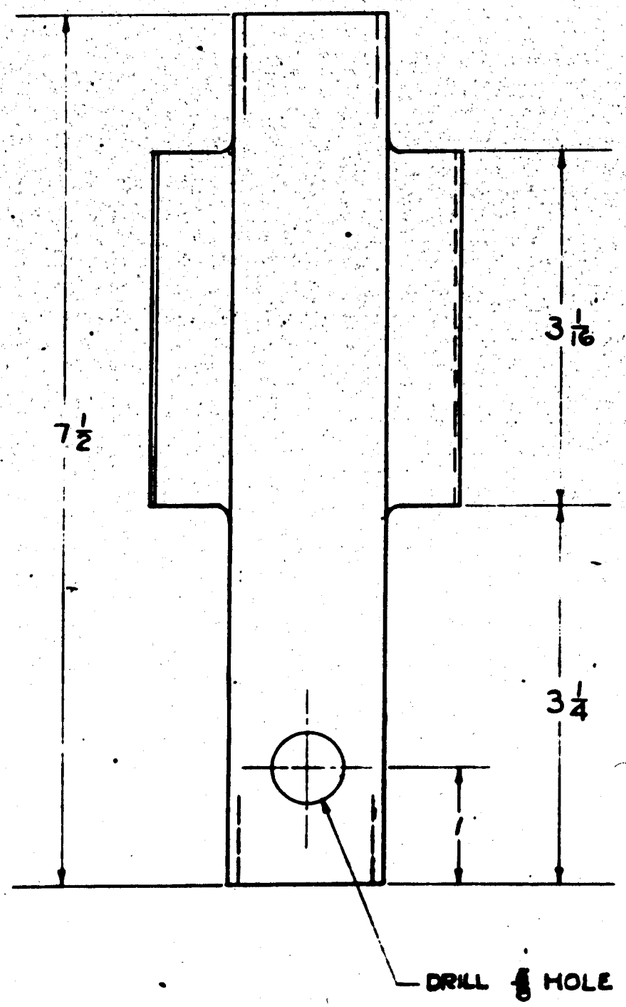

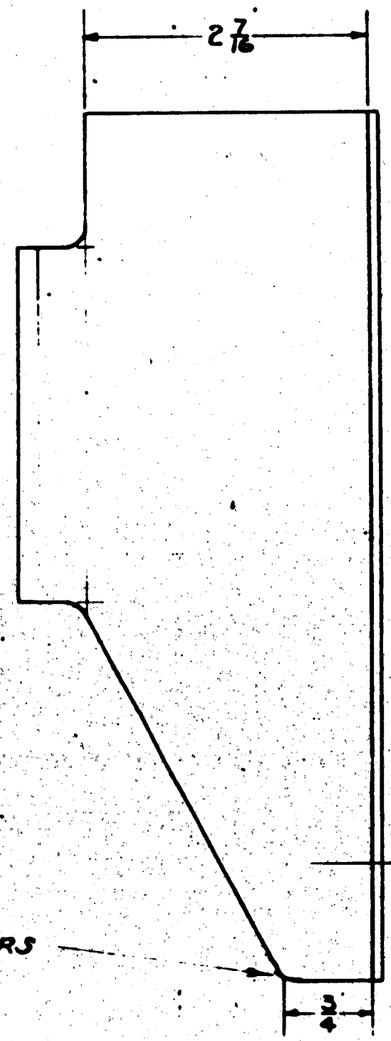

ROUND CORNERS

SECTION A-A
ROTATED 90°

SECTION B-B
ROTATED 90°

FINISH CODE	
Z	ANODIC TREATMEN
P	P-27 PRIMER
AP	ALUMINIZED PRIMER
C	CADMIUM PLATE

PBY-5A
C-7713 & C-8947
S.O. 936-53
CONTRACT 7049

ASSY. DASH NO.	MODEL	NEXT ASSY.	REQ.
-R	PBY-5A	28U5043	1
-L	PBY-5A	28U5043	1
-R	PBY-5	28U5043	1
-L	PBY-5	28U5043	1

REQUIREMENTS PER AIRPLANE

REPLACES — .38 CALC WT.

REPLACED BY — ACT WT.

UNLESS OTHERWISE SPECIFIED ± 1/32 — SCALE 12"=1'-0"

STAMP PART NUMBER WHERE SHOWN

● .091 × 7 1/2 × 8 — ALC. SHEET 47AB0003A

PART NO	STOCK	MATERIAL	SPEC.	LH REQ. -0	RH REQ. -2	LH REQ. -3	RH REQ. -4	LH REQ. -5	RH REQ.
PARTS LIST PER ASSY.									

AC			ENGR'G			BMN		
NAVY SR-53	2-P-2AP		12-8-50	3/1/41	-	FRF		
HEAT TREAT	FINISH		DRAFT	CHECK	STRUCT.	MAT	APPROV	ENG.

NAME BRACKET-ARM'T-BOW GUN-ARMOR PLATE-SIDE

OPP. HAND 28F5229-R

CONSOLIDATED AIRCRAFT CORP. San Diego, Calif.

SIZE D — 28F5229

LET	ALTERATION	DATE	BY
A	CHANGED MATL OF -6 & R FROM 24ST TO 24ST-A WAS 24ST-T	8-27-41	BAY
B	CORRECTED VIEWS & REVISED RIVET LOCATING DIMENSIONS	8-4-41	Norman
C	REMOVED HEAT-TREAT COLUMN FROM NOTE; CHANG'D HEAT-TREAT SPEC. IN TITLE BLK FROM "SR-53-6½R" TO "SR-53" NO WT. CHG.	3-21-42	GEMBERS
D	RELOCATED & REVERSED INSTL. OF -7 TO -6½ & RE-LOCATED DIMS ½ & 1⅛ NO WT CHG	10-15-42	JEP SEM

E8-5, F8Y5

E.O.A57243

AN 442-04 RIVET
4 REQ'D.

-6L

-7

-6R

SYM. ABOUT ℄

17 7/8 R

63°

1 11/16

9/16

3 1/8

1/32

A

3 1/2

1/2

3/16

3 5/8

B

1/8 R

1 1/8

7/16

-Note-

PART	BEND RADII
-6½	3/16
-7	1/8

DRILL #10 (.193) 3 HOLES. THE LOCATION IS TO BE DETERMINED ON ASS'Y FROM HOLES IN 28B1324 (REF.) ℄ 28B1325 (REF.)

-6½ (REF.)

DRILL ¼ HOLE

1 7/16 (REF.)

1 3/8

℄ OF TRACK 28B1636 (REF.)

℄ OF BOLTS BETWEEN 28B1324 & 28B1325 (REF.)

2 7/32 (REF.)

SEE D

1/4

1/2

7/8

6 13/16

1 13/16

1/4

1 3/8

CONTRACT "T7713
CONTRACT "88476
S.O. Nº 936-53
CONTRACT Nº 70496

AN 442-D4 RIVET
1 REQ'D.
QBOBD-4-6
SPACER 1 REQ'D

1

3/4

1 1/2

DRILL ℄ HOLE

VIEW - A - A
ROTATED APPROX. 120°

FINISH CODE	
Z	ANODIC TREATMENT
P	P-27 PRIMER
AP	ALUMINIZED PRIMER
C	CADMIUM PLATE

ASSY. DASH NO.	MODEL	NEXT ASSY.	REQ.
	PBY-5A	28U5043	1
	PBY-5A	28U5043	1
	PBY-5A	28U5043	1
	PBY-5	28U5043	1

REQUIREMENTS PER AIRPLANE

REPLACES 28B2 CALC. WT.

REPLACED BY ACT. WT.

LIMIT ON DECIMALS UNLESS OTHERWISE SPECIFIED ± 1/32

SCALE 12" = 1'0"

STAMP PART NUMBER WHERE SHOWN

QBOBD-4-6
AN442-04

PART No.	STOCK	MATERIAL	SPEC.	LH REQ. -0	RH REQ. -2	LH REQ. -3	RH REQ. -4	LH REQ. -5	RH REQ.
-7	.072 × 4 × 4¼	ALC. SHEET	47AB-A	1					
-6R	.091 × 2⅝ × 7	ALC. SHEET	47AB-A	1					
-6	.091 × 2⅝ × 7	ALC. SHEET	47AB-A		1				

PARTS LIST PER ASSY.

AC		A.C. STAND	1-9-41
NAVY SR53	Z-P-2AP	DRAFT	CHECK
HEAT TREAT	FINISH		

NAME BRACKET - ARM'T - BOW GUN - ARMOR PLATE - CENTER

CONSOLIDATED AIRCRAFT CORP. SAN DIEGO, CALIF.

OPP. HAND

SIZE D

28F5230

LET	ALTERATION	DATE	BY
A	AC073410 FURNISHED BY C.A.C. (WAS BY GOVT.) REMOVED NOTE & ASTERISKS	12-4-41	[illegible]

Ⓐ

AC073410 VERTICAL VIEW FINDER RING

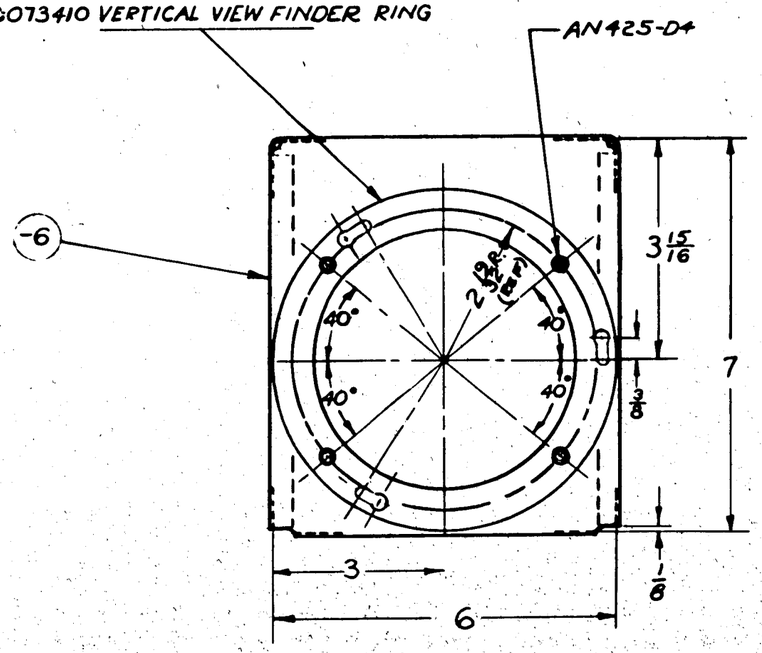

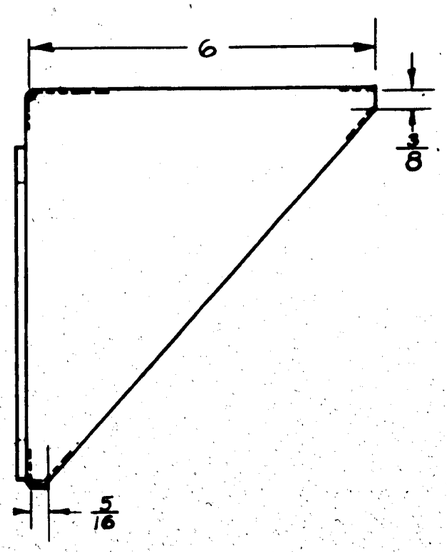

NOTE: ALL BEND RADII & RELIEF RADII ARE 1/8

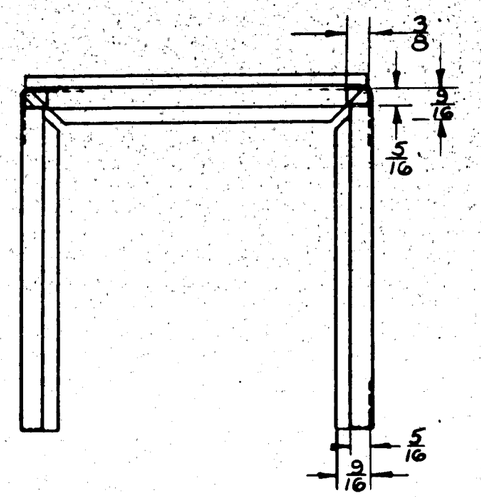

3 SHIPS - SERIAL NO'S 2486
2487
2488

CONTRACT ORDER 70496
CHANGE NO. - Q-1

Ⓐ

ASSY. DASH NO.	MODEL	NEXT ASSY.	REQ.
	PBY-5A	28F5287	1

REQUIREMENTS PER AIRPLANE

REPLACES

REPLACED BY

CALC. WT. .46

ACT. WT.

UNLESS OTHERWISE SPECIFIED ± 1/32

SCALE 6" - 1'0"

STAMP PART NUMBER WHERE SHOWN

AN425-D4

AC073410 -6 .051 x 8 x 18 3/8 ALCLAD 24AB "T"

PART NO.	STOCK	MATERIAL	SPEC.	LH REQ. -0	RH REQ. -2	LH REQ. -3	RH REQ. -4	LH REQ. -5	RH REQ.

PARTS LIST PER ASSY.

AC								
NAVY NONE	2-P-2AP (-6)	DRAFT 8/6/41	CHECK	STRUCT.	MAT	APPROV.	ENG
HEAT TREAT	FINISH						

NAME BRACKET ASSY. - VIEW FINDER STOWAGE - CAMERA INSTALLATION

CONSOLIDATED AIRCRAFT CORP. SAN DIEGO, CALIF.

OPP. HAND

DWG. SIZE D

28F5284

LET	ALTERATION	DATE	BY

F'W'D

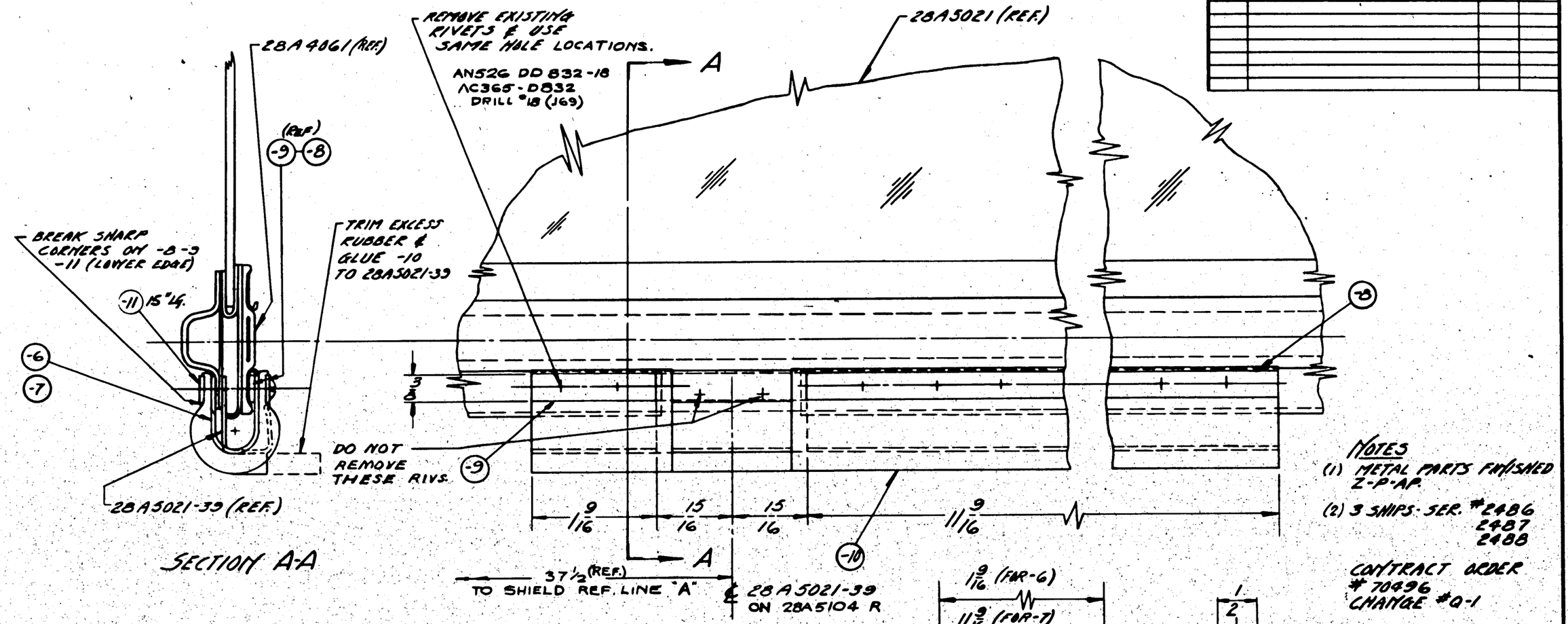

SECTION A-A

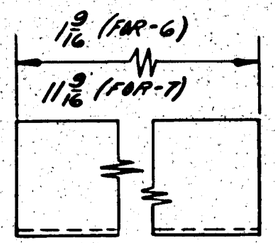

DETAIL -6 & -7

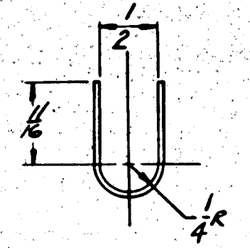

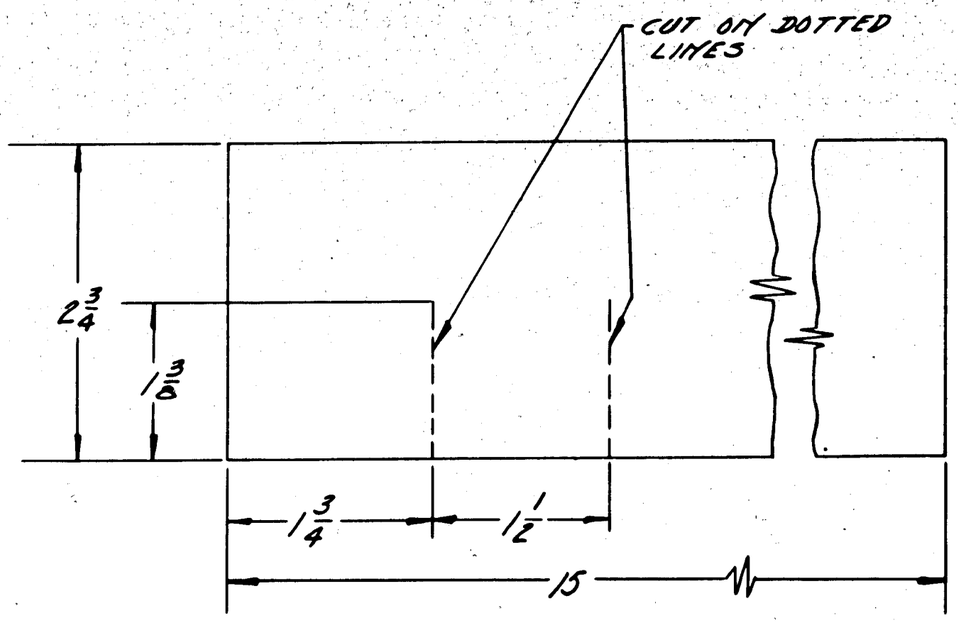

DETAIL -10
10-20 SHORE HARDNESS

NOTES

(1) METAL PARTS FINISHED Z-P-AP.

(2) 3 SHIPS - SER. #2486 2487 2488

CONTRACT ORDER #70496 CHANGE #Q-1

(3) INSTALL ON RIGHT HAND SIDE OF SHIP ONLY.

SEE NOTE #2
3 ships only

ASSY. DASH NO.	MODEL	NEXT ASSY.	QTY.
	PBYS-A	28F6001	1

REQUIREMENTS PER AIRPLANE

REPLACES — CALC. WT. .45

REPLACED BY — ACT. WT.

UNLESS OTHERWISE SPECIFIED ± 1/32

SCALE 12" = 1'

STAMP PART NUMBER WHERE SHOWN

AN526 DD832-18 — 14
AC365-DD832 — 14

PART No.	STOCK	MATERIAL	SPEC.	LH REQ.	RH REQ.	LH REQ.	RH REQ.	LH REQ.	RH REQ.	LH REQ.	RH REQ.	LH REQ.	RH REQ.
	PARTS LIST PER ASSY.			-0		-2		-3		-4		-5	
-11	.040 x 1/2 x 15 1/2	ALCLAD	47AD-T	1									
-10	1/4 x 3 x 15 1/4	SPONGE RUBBER	R-14	1									
-9	.090 x 1/2 x 1 1/4	ALCLAD	47AD-T	2									
-8	1 x 1/2 x 11 3/4	1	1	2									
-7	1 x 2 1/2 x 11 3/4	1	1	1									
-6	.040 x 1 1/4 x 2 1/2	ALCLAD	47AD-T	1									

A C								
NAVY	AS NOTED	2/25/44						
HEAT TREAT	FINISH	DRAFT	CHECK	STRUCT	MAT	APPROV	ENG.	

NAME PAD - ARM'T - CAMERA OPERATOR'S

OPP. HAND

CONSOLIDATED AIRCRAFT CORP. SAN DIEGO, CALIF.

SIZE D

28F5299

LET	ALTERATION	DATE	BY

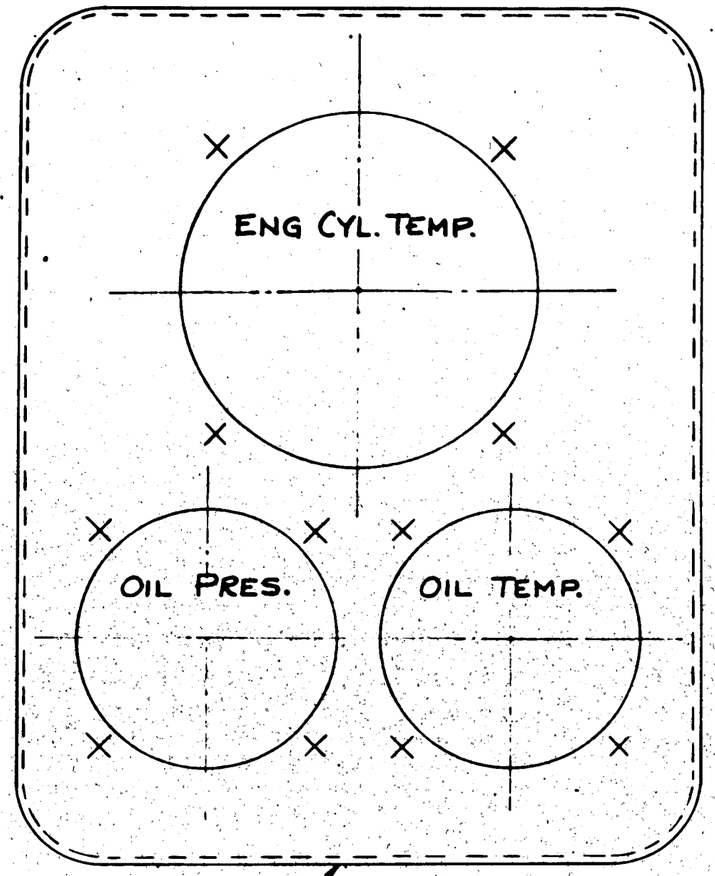

28F5322

INSTRUMENT B.M.

ITEM	FS.S.C. No.	B.A. Drwg.	REMARKS
ENG. CYL. TEMP. IND.	8812650	6658	
OIL PRES. GAGE	8866860	832-SK	
OIL TEMP. IND.	8812815	7257	
* GOV. FURNS.			

CONTRACT CHANGE "X"
AIRPLANES #118-167

ASSY. DASH No.	MODEL	NEXT ASSY.	REQ.
	PBY-5	28F5125	1

REQUIREMENTS PER AIRPLANE

REPLACES — CALC WT. 4.06

REPLACED BY — ACT. WT.

UNLESS OTHERWISE SPECIFIED DIMENSIONS ARE ± 1/32

SCALE 12" = 1'-0"

STAMP PART NUMBER WHERE SHOWN

28F5322 1

PART No.	STOCK	MATERIAL	SPEC.	LH REQ. -0	RH REQ. -0	LH REQ. -2	RH REQ. -2	LH REQ. -3	RH REQ. -3	LH REQ. -4	RH REQ. -4	LH REQ. -5	RH REQ. -5
-6													

PARTS LIST PER ASSY.

AC			DRAFT	CHECK	STRUCT	MAT	APPROV	ENG.
NAVY NONE	NONE	5-15-41						
HEAT TREAT	FINISH							

NAME PANEL ASSY - FURNS A.P.U. INSTRUMENTS

OPP. HAND

CONSOLIDATED AIRCRAFT CORP. SAN DIEGO, CALIF.

DWG. SIZE D — 28F5300

R

LET.	ALTERATION	DATE	BY.

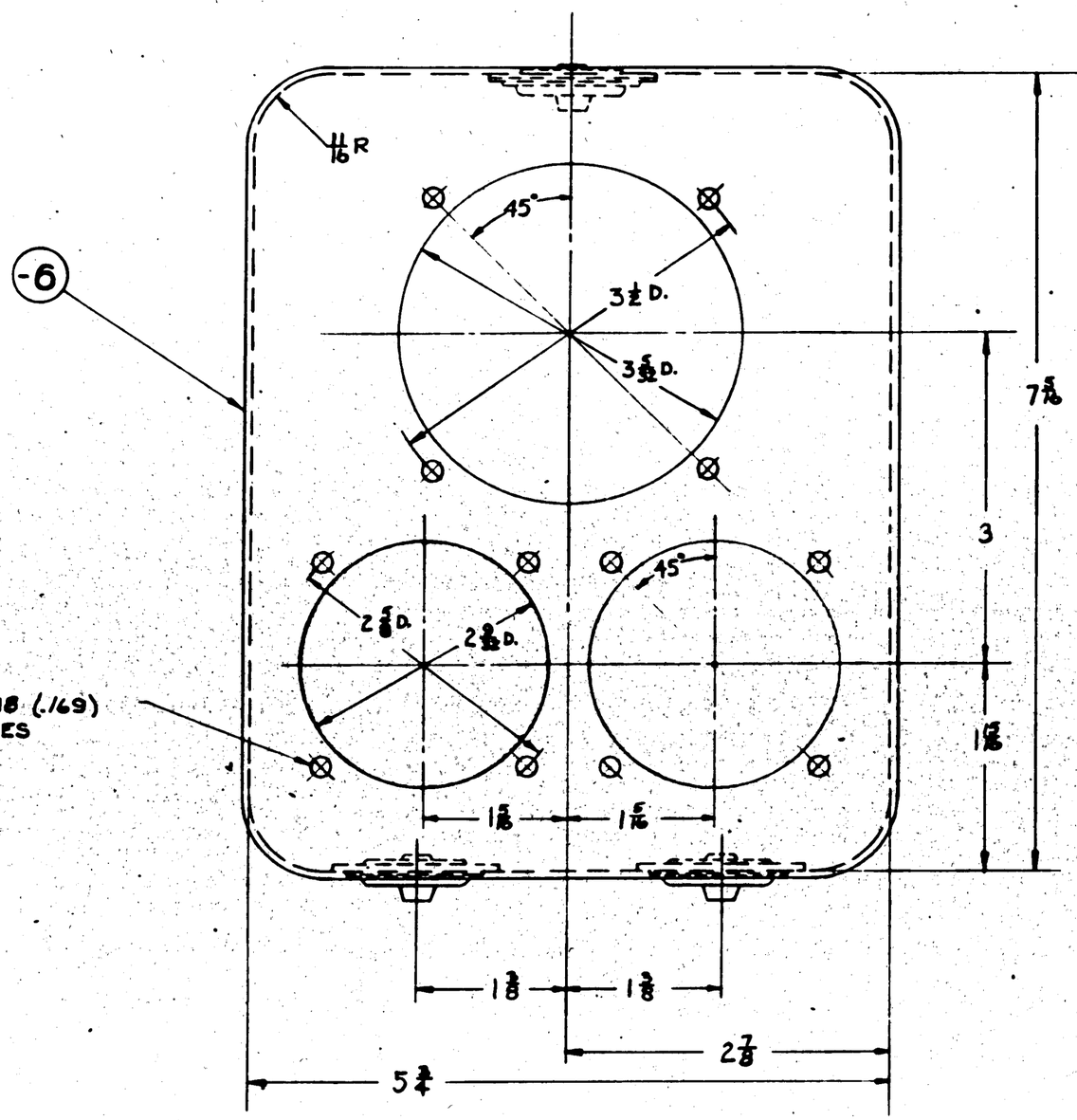

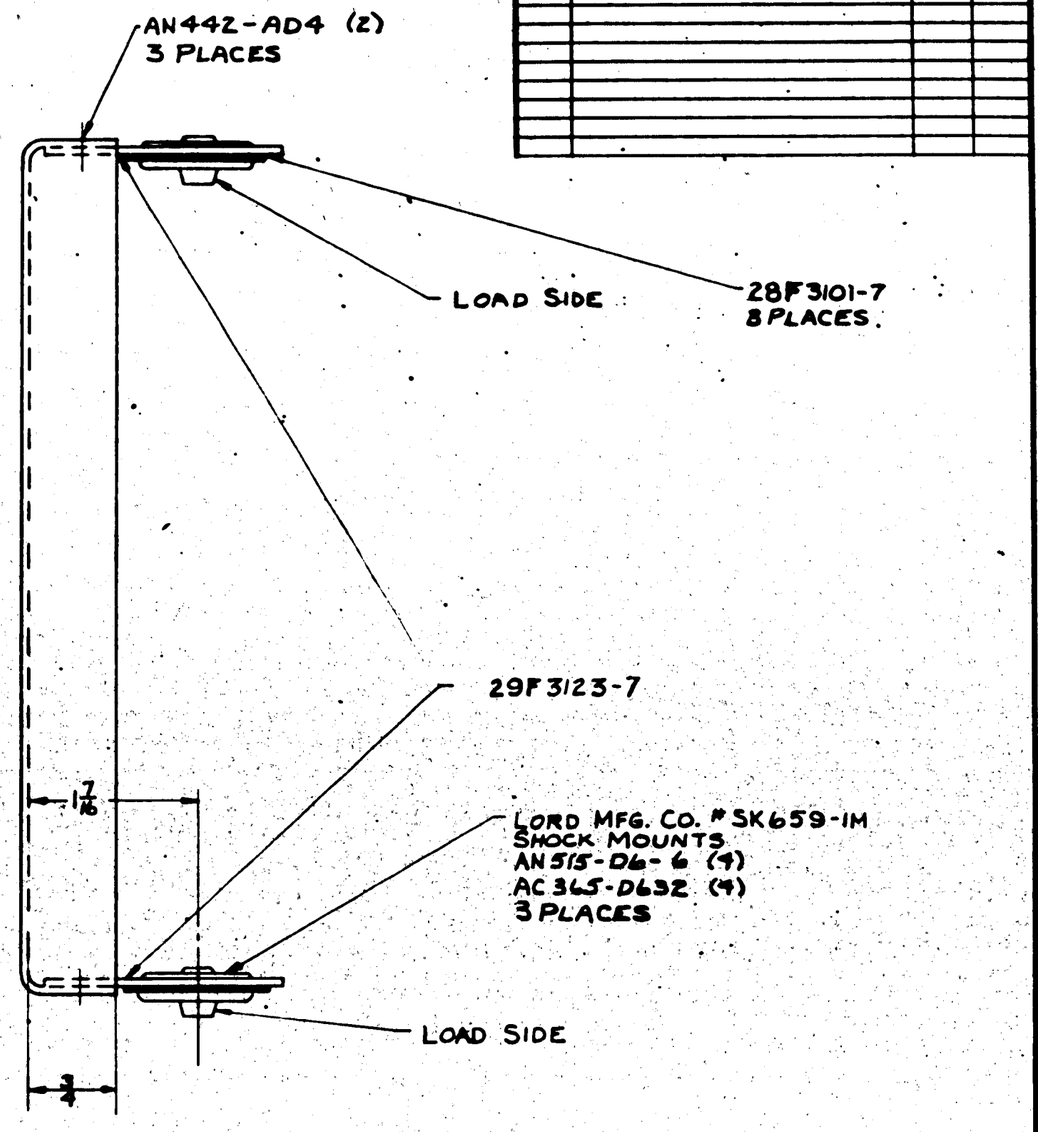

CONTRACT CHANGE "X"
AIRPLANES #118-167

BEND RADII 1/8

ASSY. DASH NO.	MODEL	NEXT ASSY.	REQ'D
	PBY-5	28F5300	1

REQUIREMENTS PER AIRPLANE

REPLACES — .51 GALS. WT.

REPLACED BY — ADV. WT.

UNLESS OTHERWISE SPECIFIED ± 1/32 — SCALE 12" = 1'-0"

STAMP PART NUMBER WHERE SHOWN

PART No.	STOCK	MATERIAL	SPEC.	LH REQ. -0	RH REQ. -2	LH REQ. -3	RH REQ. -4	LH REQ. -5	RH REQ.
	LORD MFG. CO. #SK659-1M SHOCK MOUNTS			3					
	28F3101-7			3					
	29F5123-7			3					
	AN515-D6-6			12					
	AC365-D632			12					
-6	051X8X10	ALCOA M50	47A10	1					

PARTS LIST PER ASSY.

AC

NAVY 6R-530 — Z-P-2 DBL — 5-15-41

HEAT TREAT — FINISH — DRAFT — CHECK — STRUCT — MAT — APPROV — ENG.

NAME PANEL - FURNS A.P.U. INSTRUMENTS

CONSOLIDATED AIRCRAFT CORP. SAN DIEGO, CALIF.

OPP. HAND

SIZE D — 28F5322

R

LET	ALTERATION	DATE	BY
A	TO WM. ADDED "28P5181" (1 REQ): AT 28P5181 & 22P642, ADDED "(SEE NOTE 2)". TO FACE, ADDED NOTE 2: AT CALLOUT OF 22P642 HOOK, ADDED "SEE NOTE 2" & "28A5181 (SEE NOTE 2)". NO WT. CHG.	6-16-43	HOOK

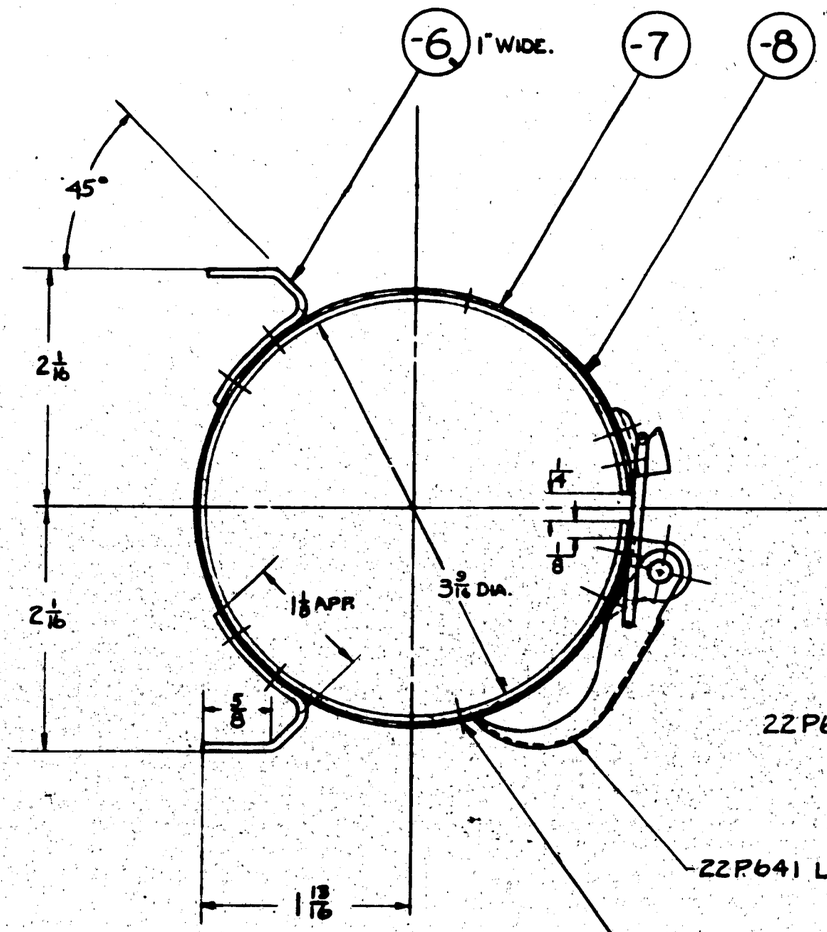

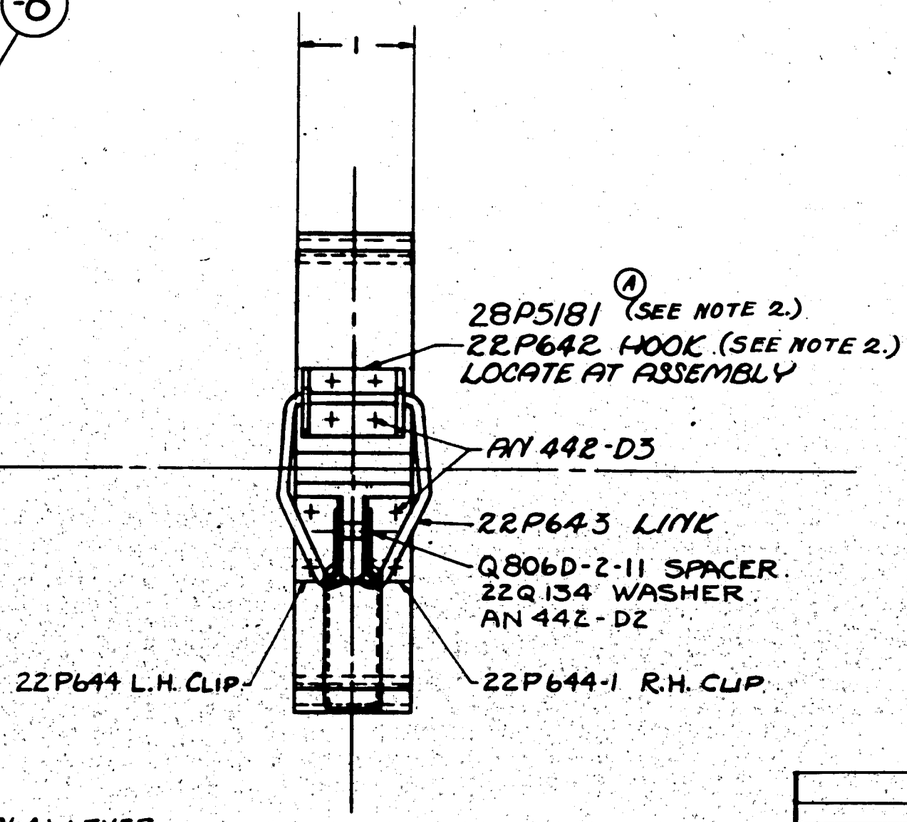

FINISH CODE	
Z	ANODIC TREATMENT
P	P-27 PRIMER
AP	ALUMINIZED PRIMER
C	CADMIUM PLATE

NOTES:

1. – FINISH – Z-P- AP. AL. ALLOY PARTS BEFORE ATTACHING STEEL PARTS IAP ASSEM (MASK WEBBING) C-31876

2. – 22P642 IS AN INTERCHANGEABLE (A) ALTERNATE FOR 28P5181.

CONTRACT CHANGE "X" AIRPLANES #118-167

ASSY. DASH No.	MODEL	NEXT ASSY.	REQ.
	XPB2Y-3	28F5324	1
	PBY-5	28F5324	1
	PB2Y-3	28F5324	1
	PBY-5	28F5324	1

REQUIREMENTS PER AIRPLANE

REPLACES	.53 CALC WT.
REPLACED BY	ACT. WT.
UNLESS OTHERWISE SPECIFIED DIMENSIONS ARE APPLICABLE AFTER FINISH	SCALE 12"=1'-0"
± 1/32	

STAMP PART NUMBER WHERE SHOWN

PART No.	STOCK	MATERIAL	SPEC.	LH REQ.	RH REQ.	LH REQ.	RH REQ.	LH REQ.	RH REQ.	LH REQ.	RH REQ.	LH REQ.	RH REQ.
				-0		-2		-3		-4		-5	
AN442-D3													
AN442-D2													
Q4302-AD4													
Q806D-2-11													
28P5181	(SEE NOTE 2.)												
22P641													
642	(SEE NOTE 2.)												
643													
644-1													
22P644													
22Q134													
-0	1/4 x 1/2	WHITE COTTON WEB. (A.C.)	6-185	1									
-7	.064 x 1/2 x 12	STAIN. STEEL	7321-Temper	1									
-8	.064 x 2 1/2 x 1/4	ALC 24ST	47AB (Cond.)	2									

PARTS LIST PER ASSY.

A C					
NAVY NONE	NOTED	S-18-41	9-8-41		
HEAT TREAT	FINISH	DRAFT	CHECK	STRUCT.	MAT

NAME STRAP ASSY. - FURNS. FIRE EXTINGUISHER BOTTLE

OPP. HAND

SIZE D

28F5323

CONSOLIDATED AIRCRAFT CORP. SAN DIEGO, CALIF.

R

LET	ALTERATION	DATE	BY

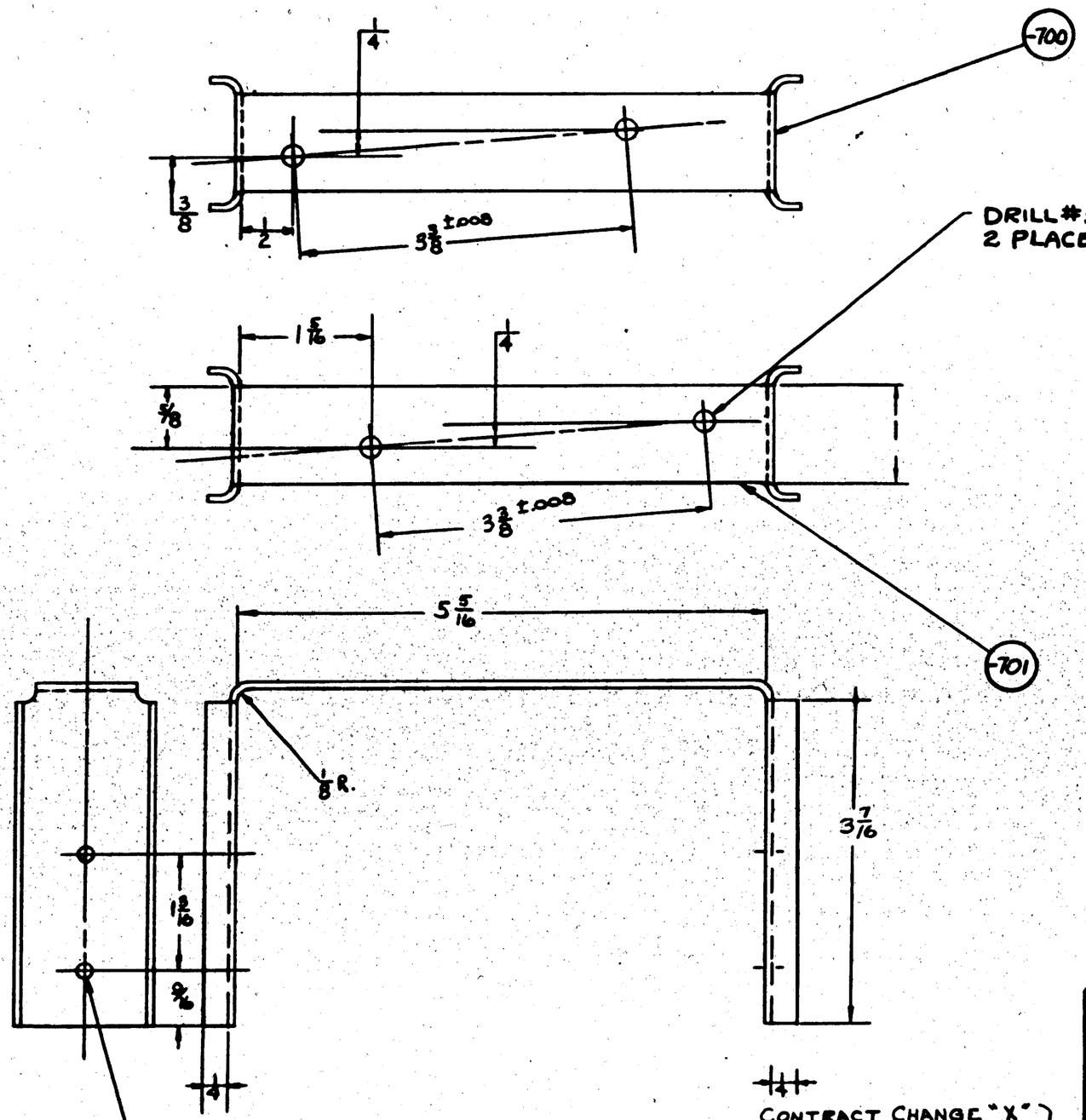

-700 & -701 IDENTICAL EXCEPT AS SHOWN

ALL BEND RADII TO BE 1/8

CONTRACT CHANGE "X"
AIRPLANES #118-167

ASSY. BASH No.	MODEL	NEXT ASSY.	REQ.
-701	PBY-5	28F5326	1
-700	PBY-5	28F5326	1

REQUIREMENTS PER AIRPLANE

REPLACES

REPLACED BY

.21 CALC. WT.

ADOPT. WT.

SCALE 12"=1'-0"

± 1/32

STAMP PART NUMBER WHERE SHOWN

-701 TO BE MADE FROM -6
-700 TO BE MADE FROM -6

PART No.	STOCK	MATERIAL	SPEC.	LH REQ. -0	RH REQ. -0	LH REQ. -2	RH REQ. -2	LH REQ. -3	RH REQ. -3	LH REQ. -4	RH REQ. -4	LH REQ. -5	RH REQ. -5
-6	.081 x 2 X 14	ALC 24-30	41A98-Comp A										

PARTS LIST PER ASSY.

AC
NAVY SR-53 — HEAT TREAT
Z-P2AL — FINISH
5-19-41 — DRAFT
5-19-41 — CHECK
STRUCT
MAT
APPROV
ENG.

NAME CHANNEL SUPPORTS - FURNS FIRE EXTINGUISHER.

CONSOLIDATED AIRCRAFT CORP. SAN DIEGO, CALIF.

OPP. HAND

SIZE D

28F5329

R

A74402

LET	ALTERATION	DATE	BY
A	CREATED -3 ASS'Y. (WT. CHANGE)	1-12-43	[illegible]
B	ADDED NOTE "-7 TO BE....DRILLING." (NO WT. CHG.)	1-12-43	[illegible]
C	IN PARTS/AIRPLANE BLOCK REMARKS 2-25-43		
	C "DIAG-"D" LION FROM -2 ASS'Y.		SCRATCH
	CHG'D -6 ASS'Y FROM C "DIAG-"1-90 TO C "DIAG. NO WT. CHG.		"

ALL BEND RADII = 1/8

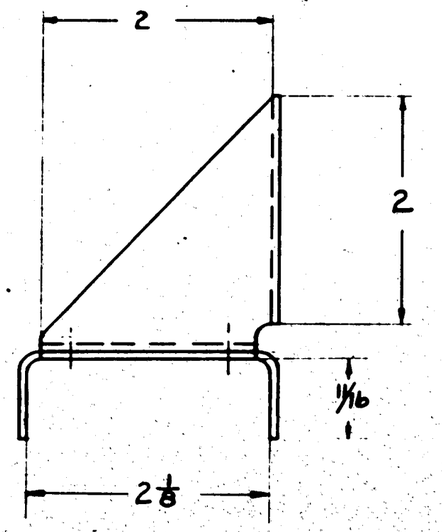

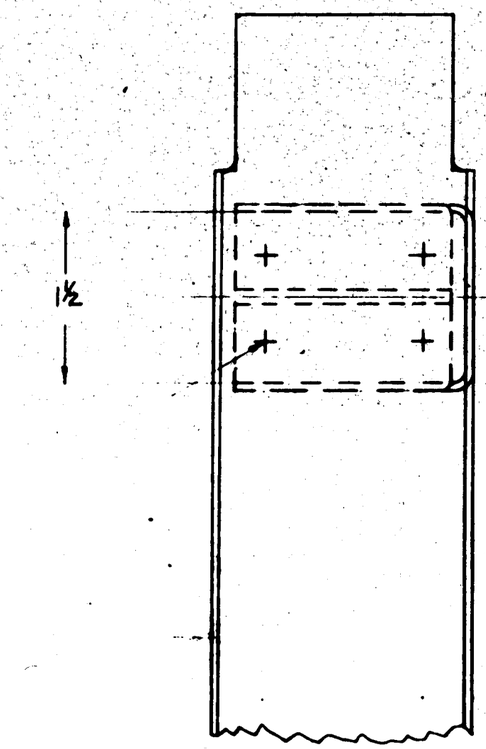

AN442-AD4
4 PLACES

DRILL #15 (.180)
2 PLACES EA. -700 & -701

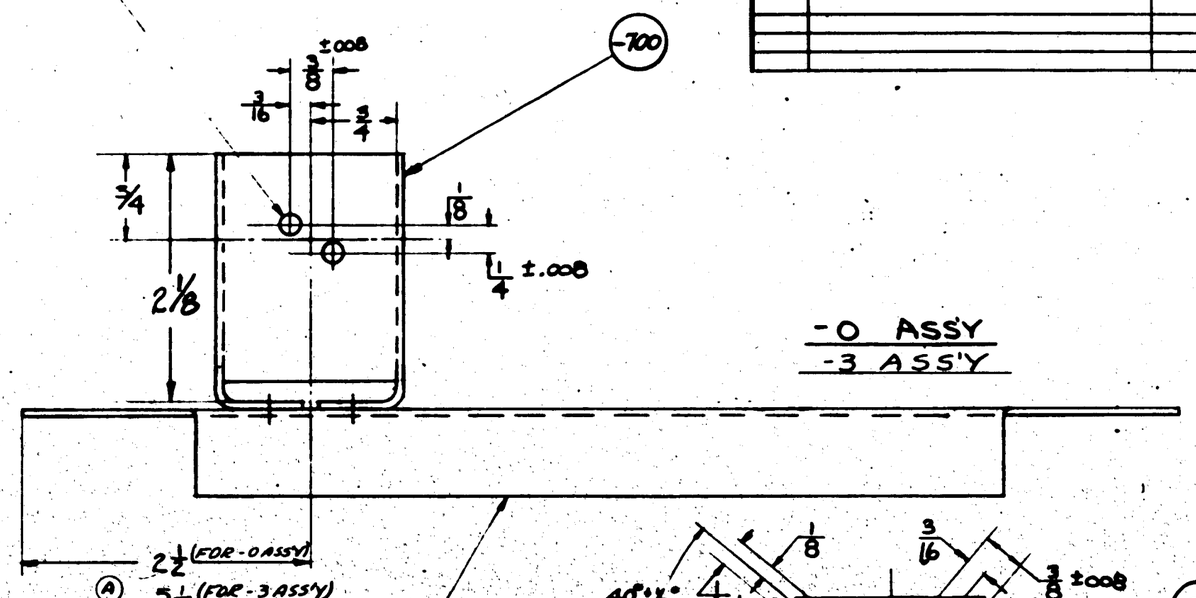

-0 ASS'Y
-3 ASS'Y

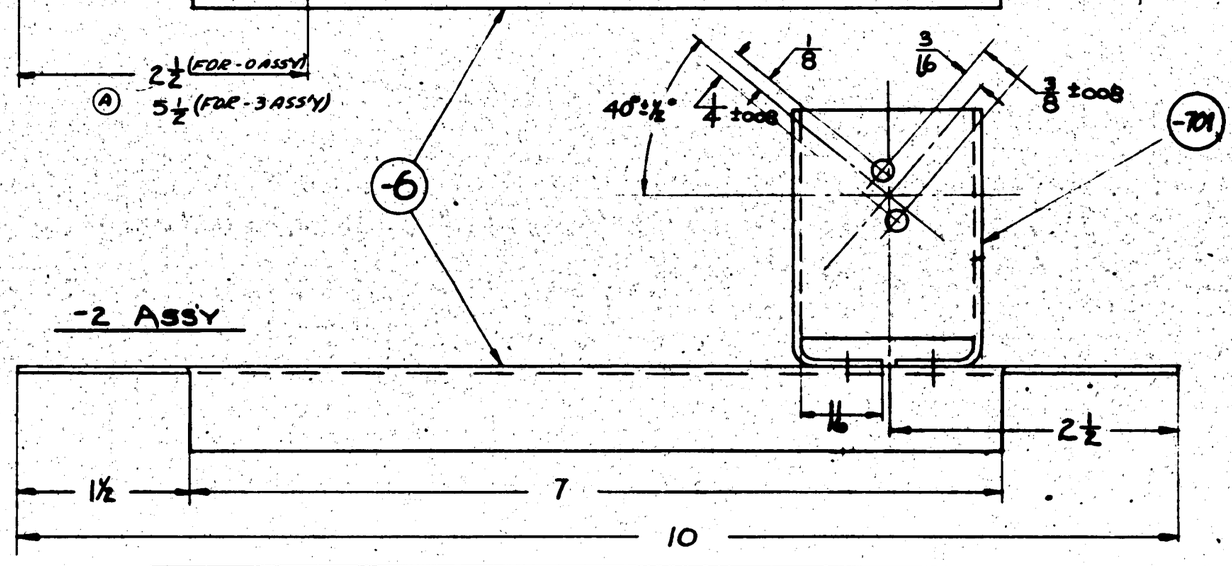

-2 ASS'Y

C 70496 #118-167 & 31876 -6
C 31876 #31604 -3
C 70496 #118-167 -2
C 70496 #118-167 & 21876 #1-90 -0

ASS'Y DASH No.	MODEL	NEXT ASSY.	REQ'D
-6	PBY-5	28F5326	1
-3	PBY-5	28F5326	1
-2	PBY-5	28F5326	1
-0	PBY-5	28F5326	1

REQUIREMENTS PER AIRPLANE

REPLACES — CALC. WT. .42

REPLACED BY — ASY. WT.

UNLESS OTHERWISE SPECIFIED DIMENSIONS ARE ± 1/32 — SCALE 12"=1'-0"

STAMP PART NUMBER WHERE SHOWN

Ⓑ NOTE:
-7 TO BE -700 & 701 AFTER DRILLING

AN442-AD4

PART No.	STOCK	MATERIAL	SPEC.	LH REQ. -0	RH REQ. -0	LH REQ. -2	RH REQ. -2	LH REQ. -3	RH REQ. -3	LH REQ. -4	RH REQ. -4	LR REQ. -5	RH REQ. -5
-701	MAKE FROM -7				1		1						
-700	MAKE FROM -7			1				1					
-7	0.64 x 5A 6 1/2	ALC. 24430 47AB-CLAD		1		1		1					
-8	0.64 x 4A R 10 1/2	ALC. 24ST 17AB-CLAD	T	1		1		1					

PARTS LIST PER ASSY.

A/C
NAVY SR-53 — HEAT TREAT
Z-P-AL — FINISH
5-26-41 — DRAFT
CHECK — STRUCT — MAT — APPROV — ENG.

NAME BRACKETS-FURNS-
FIRE EXTINGUISHER PULLEY.
CONSOLIDATED AIRCRAFT CORP. SAN DIEGO, CALIF.

OPP. HAND
SIZE D
28F5330

-0 ASSY & -2 ASSY TO BE IDENTICAL EXCEPT AS SHOWN.

LET	ALTERATION	DATE	BY
A	REMOVED BOTTOM PORTION OF SPHERICAL SURFACE & ADDED 5/8 DIM.	7-19-41	
D	CHANGED 3 3/8 TO 3 5/64	7-28-41	
C	IN REQ'S/AIR LIMITED PBY-5A REQ'S - UPTO MCR #2218-4 WAS ALL NO WT CHG	8-18-43	STEWART

MCR #2218-4

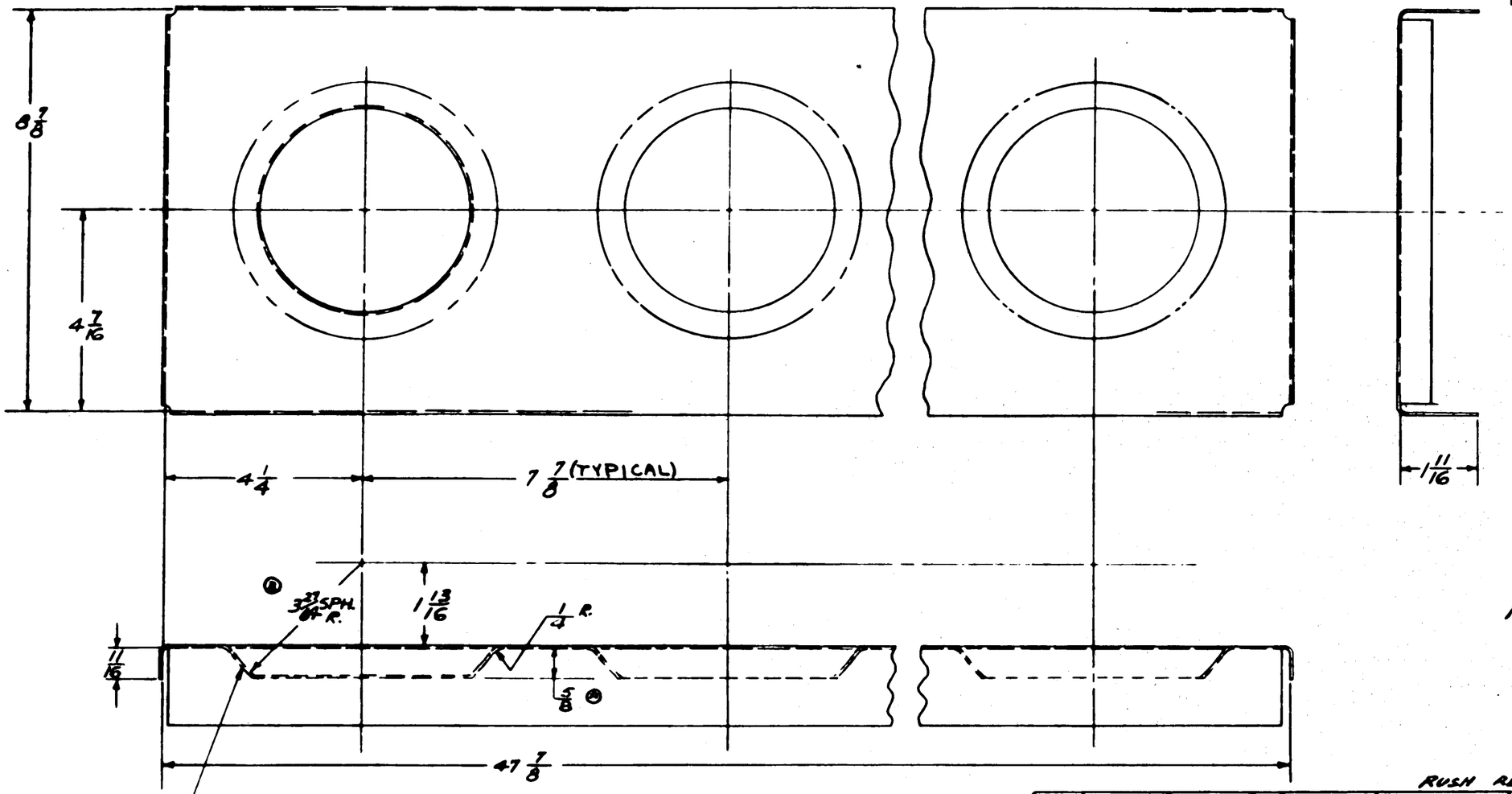

FINISH CO.	
Z	ANODIC TREATM
P	P-27 PRIMER
AP	ALUMINIZED PRIMER
C	CADMIUM PLATE

NOTE:
BEND RADII 1/4
BEND RELIEF 1/8
EXCEPT THOSE DIMENSIONED OTHERWISE

RUSH RELEASED 7/10/41

UP TO MCR #2218-4

ASSY. DASH No.	MODEL	HEAT ASSY.	MISC.
	PBY-5A	28F5336	1
	PBY-5	28F5326	1

REQUIREMENTS PER AIRPLANE

REPLACES	3.03 CALC WT.
REPLACED BY	ASY. WT.
UNLESS OTHERWISE SPECIFIED ± 1/32	SCALE 6" = 1'0"
STAMP PART NUMBER WHERE SHOWN	

PART No.	STOCK	MATERIAL	SPEC.	LH RH REQ.	LH RH REQ.	LH RH REQ.	LH RH REQ.	LH RH REQ.
PARTS LIST PER ASSY.	051-21 x 57	ALCL 2450	4748 CLASS A	-0	-2	-3	-4	-5

AC		NAME						
NAVY SP-53 CLASS J	2-P-2AP	7/9/41						
HEAT TREAT	FINISH	DRAFT	CHECK	STRESS	MAT	APPROV	ENG.	

NAME SUPPORT - FURNS. - OXYGEN BOTTLES - LOWER

OPP. HAND NAME

CONSOLIDATED AIRCRAFT CORP. SAN DIEGO, CALIF.

SIZE D

28F5334

RW

LET	ALTERATIONS	CHK'D	DATE
A	CHGD 7-16 HOLE ARRNGT		
	ADDED DIM TO 7/16		
B	FINISH "NONE" WAS "Z-P-2AP"		
	NO WT CHG		
C	IN REQ'S/NR LIMITED PBY-5A		
	REQ'S - UP TO NCR "221B-4 WHEN ALL		
	NO WT. CHG		

MCR 221-B4

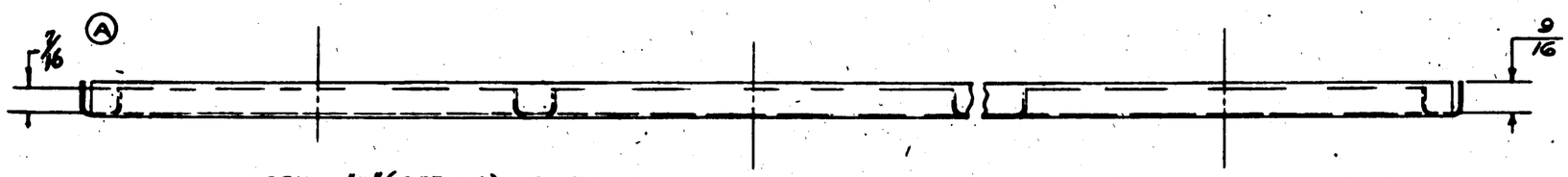

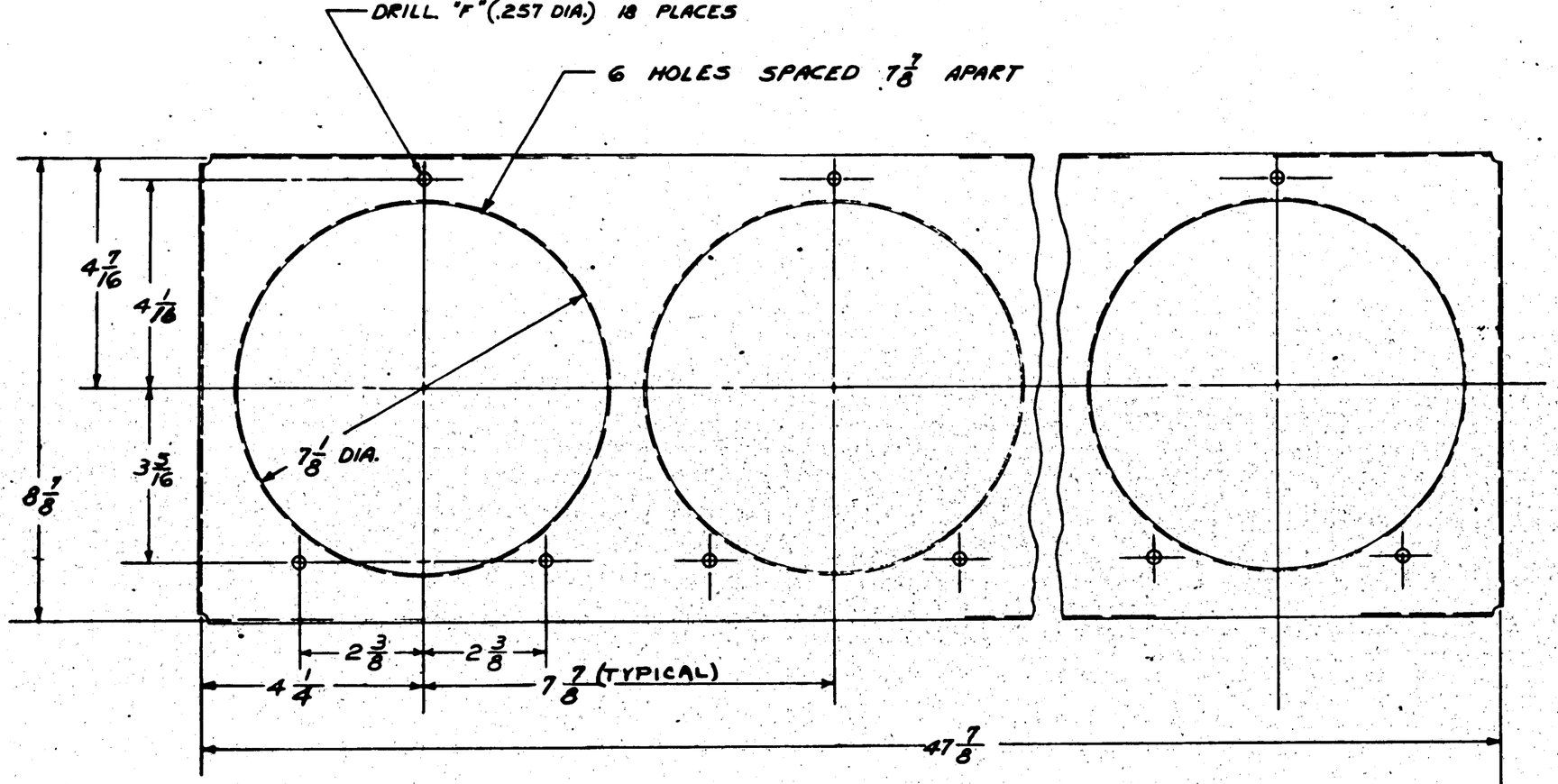

NOTE
BEND RADII & BEND RELIEF ± 1/32

FINISH CODE	
Z	ANODIC TREATMENT
P	PRIMER
AP	ALUMINIZED PRIMER
C	CHROMIUM PLATE

UP TO MCR 221B-4

ASSY. DASH No.	MODEL	NEXT ASSY.	REQ.
	PBY-5A	28F5336	1
	PBY-5	28F5336	1

REQUIREMENTS PER AIRPLANE

REPLACES	1.66 CALC. WT.
REPLACED BY	ACT. WT.
UNLESS OTHERWISE SPECIFIED ± 1/32	SCALE 6" = 1'0"
STAMP PART NUMBER WHERE SHOWN	

PART No.	STOCK	MATERIAL	SPEC.	LH REQ. -0	RH REQ. -2	LH REQ. -3	RH REQ. -4	LH REQ. -5	RH REQ.
	.051 X 13 X 51	ALCL 2450	47A COND A						

PARTS LIST PER ASSY.

AC			MAS					
NAVY SR-53 COND T	NONE		7/5/41					
HEAT TREAT	FINISH	DRAFT	CHECK	STRUCT	MAT	APPROV	ENG.	

NAME SUPPORT-UPPER-FURNS.-OXYGEN BOTTLES

OPP. HAND NONE

CONSOLIDATED AIRCRAFT CORP. San Diego, Calif.

DWG. SIZE D | 28F5339

LET	ALTERATION	DATE	BY
A	FINISH ZD-2AP REPLACED BY NONE PER WT CHG [illegible]		
B	IN REG. AIRPLANE BLOCK LIMITED P&V-5A REQ. "UP TO 2218-4. WAS "ALL." NO WT CHG. [illegible]		

MCR 2211-B-4

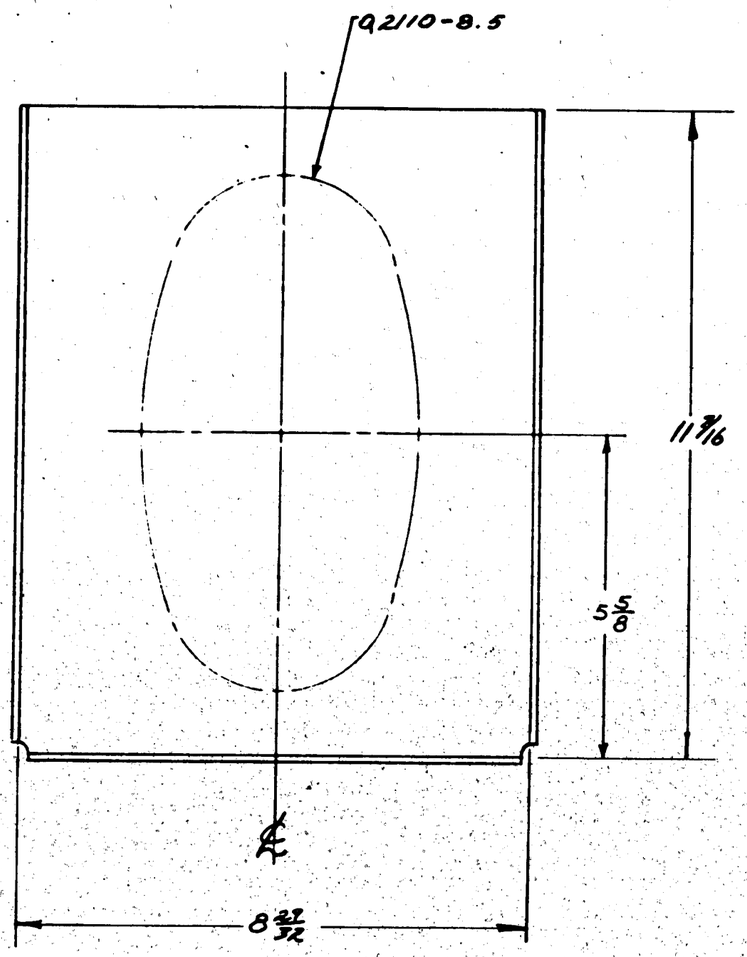

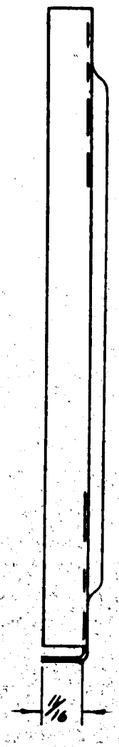

RELEASED AS PER CONTRACT #91876

NOTE: ALL BEND + RELIEF RADII TO BE 1/8

UP TO MCR 2218-4

RUSH RELEASED 7/11/41

FINISH CO	
Z	ANODIC TREAT
P	P-37 PRIMER
AP	ALUMINIZED PRIM
C	CADMIUM PLATE

ASSY. DASH NO.	MODEL	NEXT ASSY.	REQ.
-0	P&V-5A	28F5336	2
-0	P&V-5	28F5336	2

REQUIREMENTS PER AIRPLANE

REPLACES

REPLACED BY

CALC WT. .38

ACT. WT.

LIGHT ON DIMENSIONS UNLESS OTHERWISE SPECIFIED ± 1/32

SCALE 6"=1'-0

STAMP PART NUMBER WHERE SHOWN

PART NO.	STOCK	MATERIAL	SPEC.	LH REQ.	RH REQ.	LH REQ.	RH REQ.	LH REQ.	RH REQ.	LH REQ.	RH REQ.	LH REQ.	RH REQ.
				-0		-2		-3		-4		-5	
-6	090 X 15" X 13	ALAL 2950	47A8 COND A										

PARTS LIST PER ASSY.

AC

NAVY SR-53 COND T

HEAT TREAT

NONE

FINISH

MARKER 7/16/41

DRAFT | CHECK | STRUCT | MAT | APPROV | ENG.

NAME BULKHD — FURNS — OXYGEN BOTTLES

OPP. HAND

CONSOLIDATED AIRCRAFT CORP. SAN DIEGO, CALIF.

SIZE D

28F5342

LET	ALTERATION	DATE	BY
A	CHG'D DIM Ø1/16 TO Ø3/16	11-20-41	[illegible]
B	CHG 3 DIA WAS 3 1/16 DIA.	11-20-41	HOLLAND
C	IN RNS/AIR LIMITED P8Y-5A		
	REQ'S - UP TO MCR 2218-4 WAS		
	ALL - NO WT. CHG.	9-19-44	[illegible]

E.D.C./3587
MCR #221-84

DRILL "F" 3-PLACES
(.257 DIA)

$2\frac{3}{8}$

$2\frac{3}{8}$

$2\frac{7}{8}$

$5\frac{3}{4}$

3 DIA

$\frac{1}{2}$R

$\frac{1}{2}$ $3\frac{5}{16}$ $4\frac{1}{16}$

$8\frac{3}{8}$

UP TO MCR #2218-4

$1\frac{1}{8}$

$\frac{9}{16}$

$3\frac{3}{8}$ R.

$3\frac{3}{16}$

NOTE:
ALL BEND RADII TO BE 1/8 EXCEPT AT CORNERS WHERE 1/4 R. MAY BE USED.

RELEASED AS PER CONTRACT #91876

FINISH CODE	
Z	ANODIC TREATMENT
P	P-27 PRIMER
AP	ALUMINIZED PRIMER
C	CADMIUM PLATE

ASSY. DASH No.	MODEL	NEXT ASSY.	QUAN.
	P8Y-5A	28F5336	6
	P8Y-5	28F5236	6

REQUIREMENTS PER AIRPLANE

REPLACES — Wt. Calc. Wt.

REPLACED BY — Adv. Wt.

SCALE 12"=1'0

STAMP PART NUMBER WHERE SHOWN

PART No.	STOCK	MATERIAL	SPEC.	LH REQ. -0	RH REQ. -2	LH REQ. -3	RH REQ. -4	LH REQ. -5	RH REQ.
	.064 X 11 X 13	ALC. 2460	47AB comm'l						

PARTS LIST PER ASSY.

AC

NAVY 3R53 comm'l — HEAT TREAT

2P-2AP — FINISH

DRAFT — CHECK — STRUCT — MAT — [illegible] — ENG.

NAME HAT-FURN'S OXYGEN BOTTLE'S

CONSOLIDATED AIRCRAFT CORP. SAN DIEGO, CALIF.

OPP. HAND

SIZE D

28F5346

LTR	ALTERATION	DATE	BY
A	[illegible] / MADE A REF. TO -9 COLUMN. ADDED DIMENSION [illegible] / DEL. ACCESS. HOLE RELEASE		
B	IN S/N. FOR -6 REPLACE "K78F X16 AL. ALLOY 46A9 COND.T" WITH "Y-2-A49T X16"; FOR -7, REPLACED "K78F X22 1/8 AL. ALLOY 46A9 COND.T" WITH "Y-2-A49T X22 1/8"; FOR -9 REPLACED "K5401 X1 AL. ALLOY EXT. 46A9 COND. T" WITH ".072 X1X1 1/2, 24ST ALCLAD SHT." SPEC. "QQ-A-362 COND.T." ADDED 3/32 R & REMOVED "REF." FROM 5/8 DIM. FOR -9; BROT. RELEASES UP TO DATE WT. CHG. NEG.	4-30-43	[illegible]
C	IN S/N FOR -6 REPLACED "Y-2-A49T X 16" WITH "NOTED" FOR -7 REPLACED "Y-2-A49T X 22 1/8" WITH "NOTED" FOR -9 REPLACED ".072 X1X1 1/2" WITH "NOTED" ON FACE OF DWG. ADDED NOTES: 1, 2 & 3. NO WT. CHG.	11-12-43	ARBLE

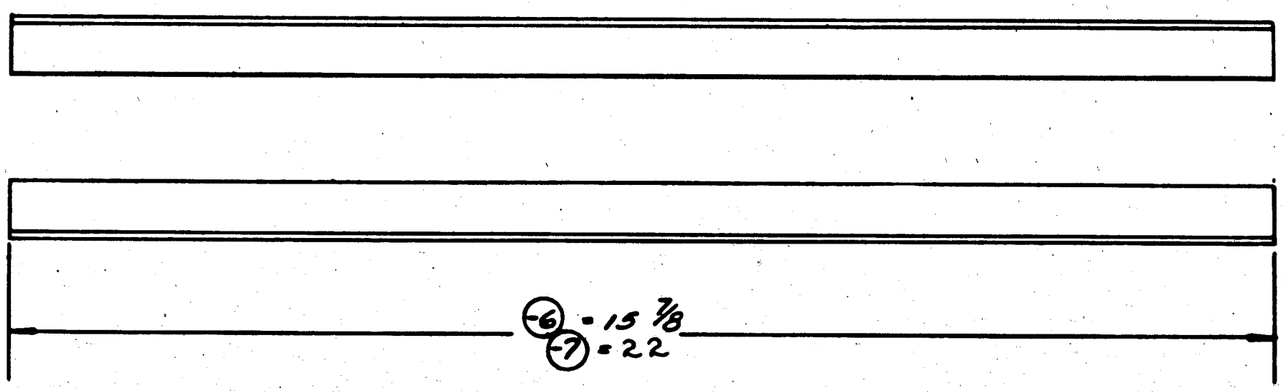

NOTES- ©
1- MATERIAL FOR -6 MAY BE:
(A) Y-2-A49T X16, OR
(B) K78F X16, 24ST AL. ALLOY EXTR, SPEC. QQ-A-354-T.
2- MATERIAL FOR -7 MAY BE:
(A) Y-2-A49T X22 1/8, OR
(B) K78F X22 1/8, 24ST AL. ALLOY EXTR., SPEC. QQ-A-354-T.
3- MATERIAL FOR -9, MAY BE:-
(A) .072 X1X1 1/2, 24ST ALCLAD SHEET, SPEC. QQ-A-362-T
(B) K5401 X1 1/2 24ST AL ALLOY EXTR., SPEC. QQ-A-354-T.

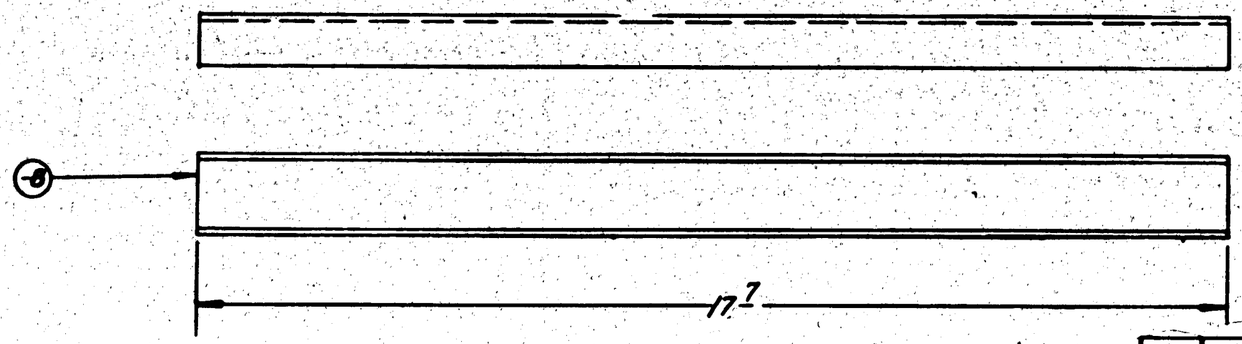

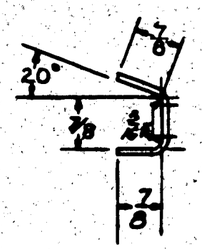

FINISH CODE	
Z	ANODIC TREATING
P	P-27 PRIMER
AP	ALUMINIZED PRIMER
C	CADMIUM PLATE

PARTS FOR C 70696 TO BE FURN TO NAVY

ASSY. DASH NO.	MODEL	NAVY ASSY.	QUAN.
-9	28-5AMN	28F5354	4
-8	28-5AMN	28F5354	1
-7	28-5AMN	28F5354	1
-6	28-5AMN	28F5354	1
-9	PBY-5A, B	28F5354	4 EA
-8	PBY-5A, B	28F5354	2 EA
-7	PBY-5A, B	28F5354	2 EA
-6	PBY-5A, B	28F5354	2 EA
-9	PBY-5	28F5354	4
-8	PBY-5	28F5354	2
-7	PBY-5	28F5354	2
-6	PBY-5	28F5354	2

REQUIREMENTS PER AIRPLANE

	Quan. Wt.
REPLACES	
REPLACED BY —	Assy. Wt.

LAST OR SUBSEQUENT CHANGE: +7/32 — SCALE: 6" = 1'-0" — STAMP PART NUMBER WHERE SHOWN

PART No.	STOCK	MATERIAL	SPEC.	RH REQ.	LH REQ.	RH REQ.	LH REQ.	RH REQ.	LH REQ.	RH REQ.	LH REQ.	RH REQ.	LH REQ.
28F5353-9	NOTED	NOTED	NOTED									-3	-4
28F5353-8	.081 X3 X18	AL. ALLOY	QQ-A-362-T										
28F5353-7	NOTED	NOTED	NOTED										
28F5353-6	NOTED	NOTED	NOTED										

PARTS LIST PER ASSY.

A C		11-7-41	[illegible]	[illegible]	JFR					
NAVY [illegible]	Z-20P	BAKER 2nd								
HEAT TREAT	FINISH	DRAFT	CHECK	STRUCT	MAT	ARMOR	ENG.			

NAME BRACE FURN. PILOTS ARMORED SEAT.

CONSOLIDATED AIRCRAFT CORP. San Diego, Calif.

OPP. HAND

SIZE D — DWG. 28F5353

R 28F5353

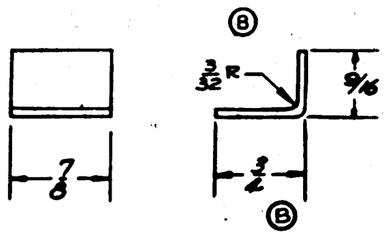

⑨ SCALE - 12" = 1'-0"

LET	ALTERATION	DATE	BY

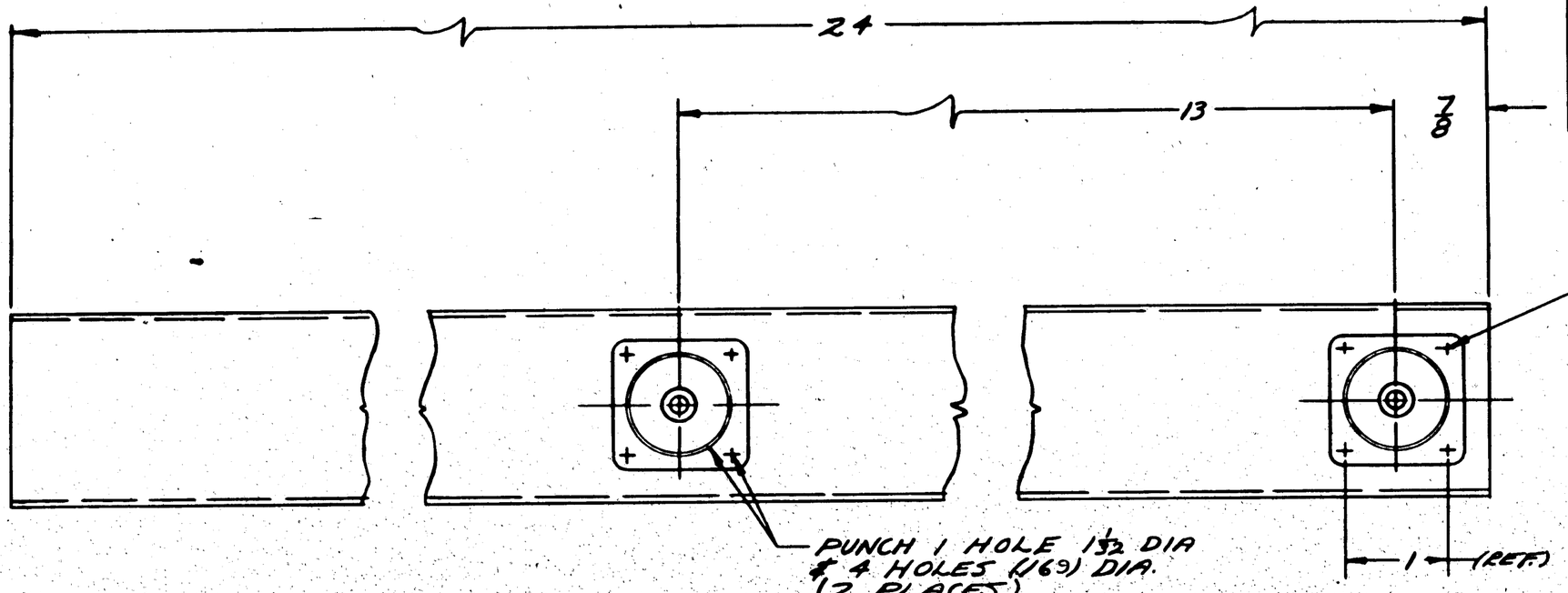

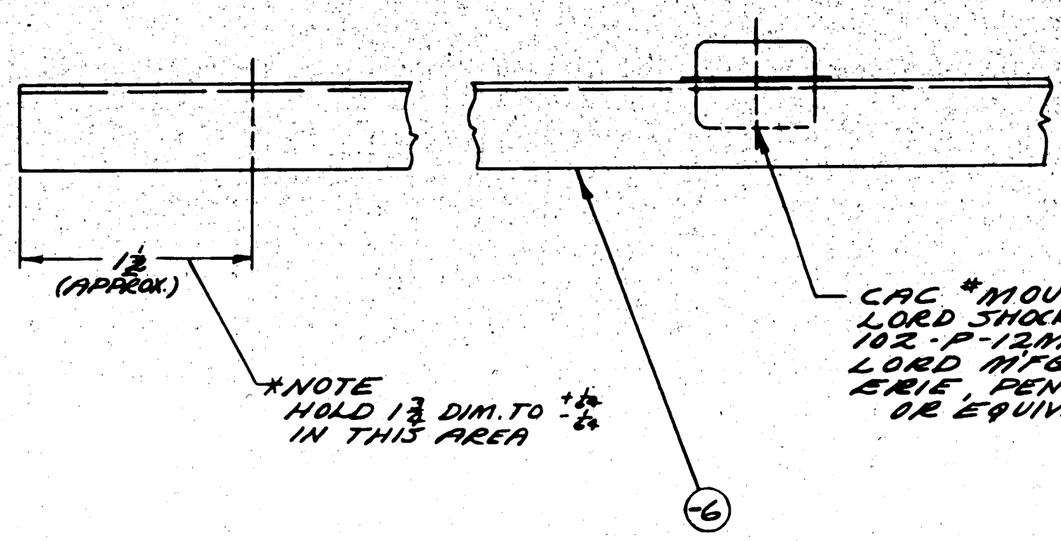

CONTRACT #91876

| | | |

LTR	DESCRIPTION	DATE	BY
	[illegible]		
A	[illegible]		

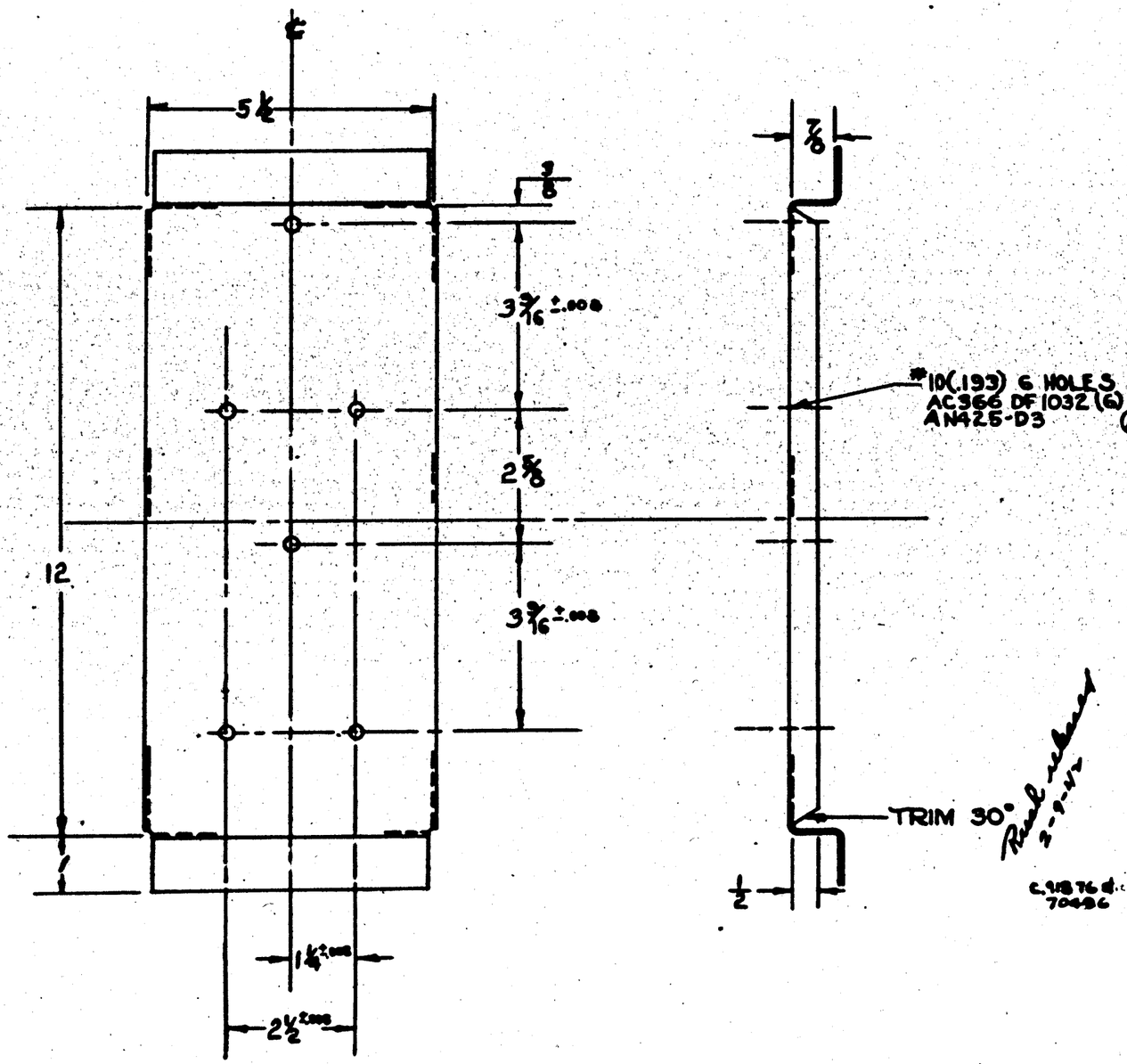

NOTE: ALL BEND & RELIEF RADII ARE 1/8

FINISH CODE	
Z	[illegible]
P	[illegible]
AP	[illegible]
C	[illegible]

PAY-SR [illegible] / AC366-DF-1032
PAY-S [illegible] / AN425-D3

6
1/2

ASSY. CLASS NO. | MODEL | NEW ASSY. | MOD.

REQUIREMENTS PER AIRPLANE

REPLACES	.51 CALC. WT.
REPLACED BY	ASY. WT.
UNLESS OTHERWISE VALUES ARE GIVEN DIMENSIONS ARE ± 1/32 & NOTED	SCALE 6" = 1'-0"
BY ASSY. DRAFT SHOWN	BY PART DRAFT SHOWN

-6 [illegible]

PART No.	STOCK	MATERIAL	SPEC.	LH REQ.	RH REQ.	LH REQ.	RH REQ.	LH REQ.	RH REQ.	LH REQ.	RH REQ.	LH REQ.	RH REQ.
PARTS LIST PER ASSY.				-0	-2	-3	-4	-5					

AC		CHECKED					
NAVY SR-52	Z-P-AP	[illegible]					
HEAT TREAT	FINISH	DRAFT	CHECK	STRUCT	MAT	APPROV	ENGR.

NAME SUPPORT ASSY FURN-RADAR. ANT. CHANGE OVER SWITCHES

OPP. HAND

CONSOLIDATED AIRCRAFT CORP. San Diego, Calif.

SIZE D | 28F5365

LET	ALTERATION	DATE	BY
A	RELEASE AFTER PRE-RELEASE	2/26/42	[illegible]
B	RE-LOCATE MOUNTING HOLES IN -6 & -7 TO MATCH 28F5372 & 28F6414	2/26/42	G.E. [illegible]
C	ADDED 4 HOLES & DIM'S REF. WT. CHG	3-21-42	[illegible]
D	CHGD. SHIP ARRANGEMENTS ON CONTRACT #1878, WAS 101 & ON FOR -7 & 1 TO 100 FOR -6.	9-30-42	[illegible]

E.A. # 2X619

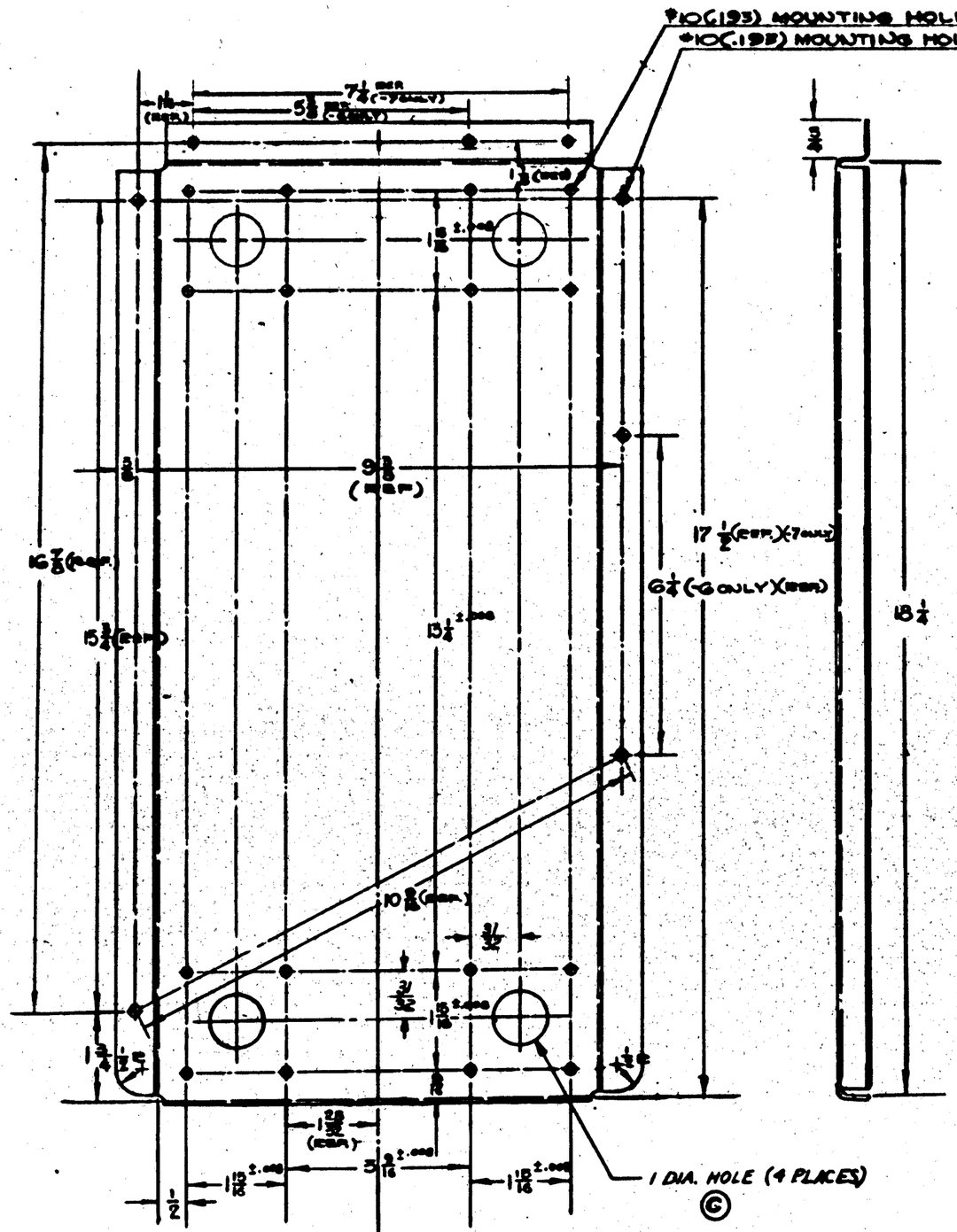

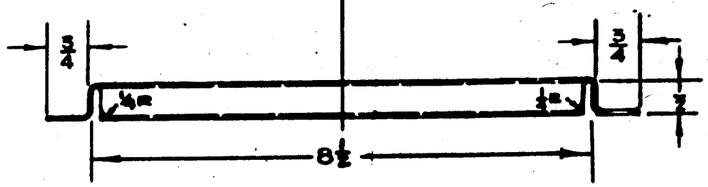

NOTE: ALL BEND & RELIEF RADII 1/8 UNLESS OTHERWISE NOTED.
-6 FOR INST. ON 28F5376 SHELF
-7 FOR INST. ON 28F5374 SHELF
} SEE THESE DWGS. FOR HOLE LOCATIONS

Rush-released 2-26-'42

FINISH CODE	
Z	ANODIC TREATMENT
P	P-27 PRIMER
AP	ALUMINIZED PRIMER
C	CADMIUM PLATE

CONTRACT #91876 { 88476 #53 & ON SHIPS #9) & ON: -7 PBY-5A 28F6414 1; -7 PBY-5 28F6414 1; SHIPS #1 TO 99: -6 PBY-5 28F5372 1 }
CONTRACTS #70496, 77713, AND FIRST 52 SHIPS OF 88476: -6 PBY-5A 28F5372 1

ASSY. DASH NO.	MODEL	NEXT ASSY.	QTY.

REQUIREMENTS PER AIRPLANE

REPLACES — 1.125 CALC. WT.
REPLACED BY — ADV. WT.
SCALE 6"=1'0"
± 1/32 STAMP PART NUMBER WHERE SHOWN

PART NO.	STOCK	MATERIAL	SPEC.	LH REQ. -0	RH REQ. -2	LH REQ. -3	RH REQ. -4	LH REQ. -5	RH
28F5373-7	.051 x 11⅝ x 20¼	ALCLAD 2450	47A8 "A"	1					
28F5373-6	.051 x 11⅝ x 20¼	ALCLAD 2450	47A8 "A"		1				

PARTS LIST PER ASSY.

A.C.								
NAVY SB-53	Z·P·AP							
HEAT TREAT	FINISH	DRAFT	CHECK	STRUCT	MAT	APPROV	ENG.	
		[illegible]	[illegible]	[illegible]	[illegible]	[illegible]	[illegible]	

NAME PAN-FURN.-RAD. OPER. VISUAL INDICATOR MOUNTING

CONSOLIDATED AIRCRAFT CORP. SAN DIEGO, CALIF.

OPP. HAND

SPEC. D SIZE 28F5373

E.8A52955

LET	ALTERATION	DATE	BY
A	1M-11, 8A4C CABLE X 81 WAS 8A6CX 120.38, SWT. CHG. -.6	8-6-42	BRIN

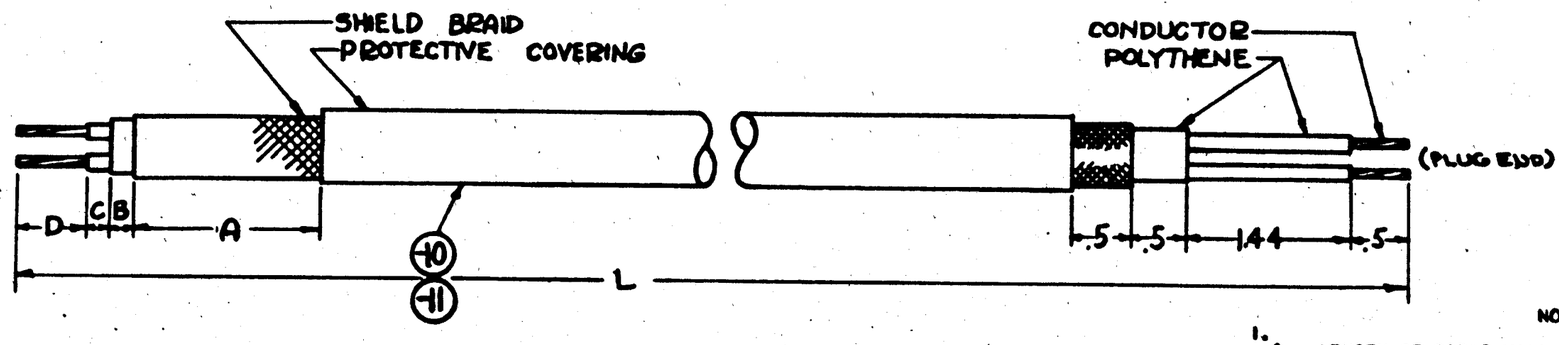

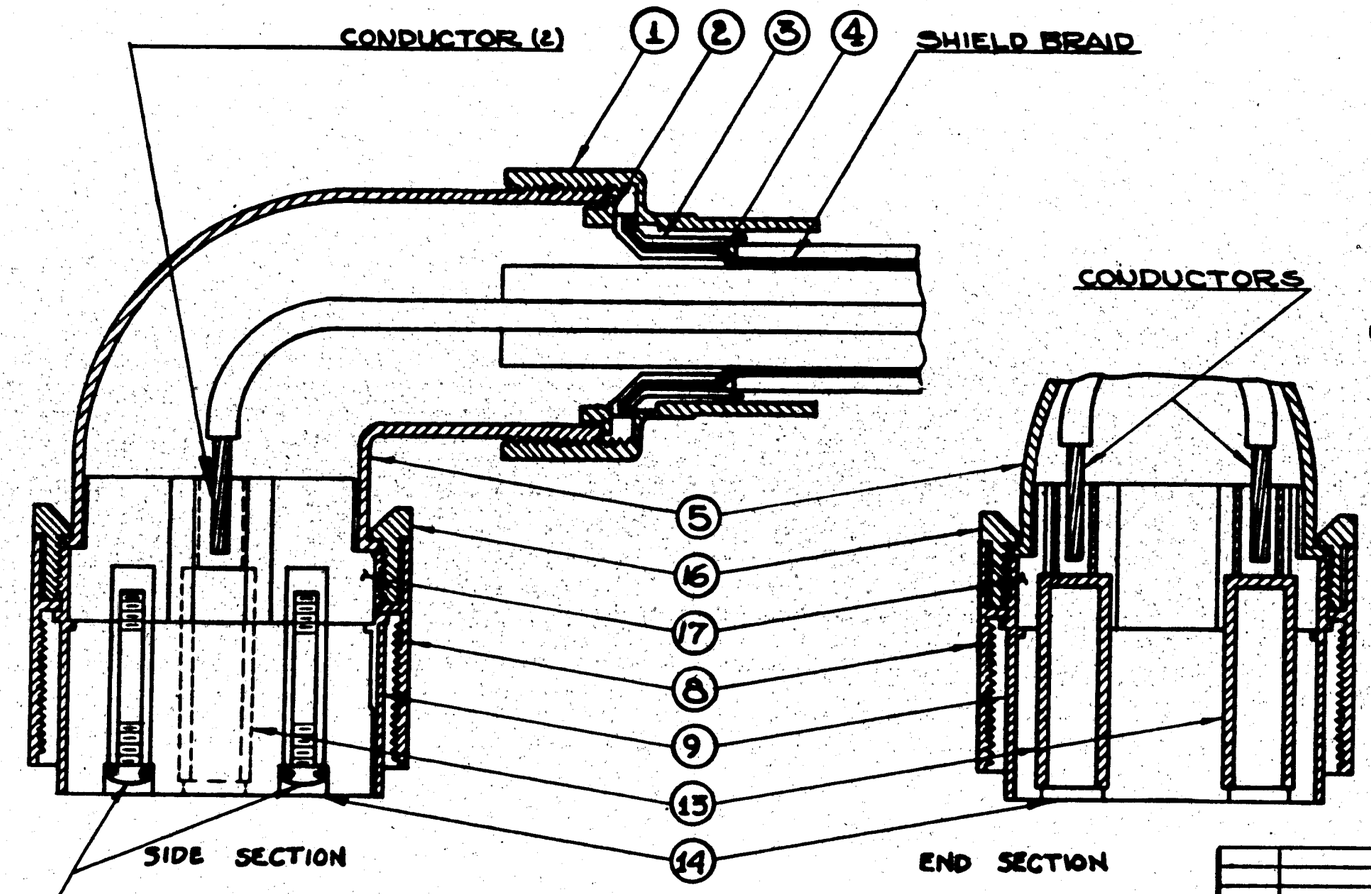

DASH Nos.	A	B	C	D	L
-10	1.63	.2	.2	.6	50
-11	.5	.15	.2	.4	120

NOTES:

I.
- A. LENGTH OF CABLE WILL BE APPROXIMATE. EXACT LENGTHS FOR EACH "BATCH" OF CABLE WILL BE DETERMINED BY TEST AND SUPPLIED TO SHOP BY RADAR TEST GROUP.
- B. SINCE THE POLYTHENE INSULATION OF THE CABLE MELTS AT 80° C., TINNING MUST BE DONE QUICKLY WITH A CLEAN HOT IRON TO PREVENT SPOILING THE CABLE.
- C. CABLE CANNOT BE BENT IN LESS THAN A 10" RADIUS DUE TO "COLD FLOW" PROPERTIES OF POLYTHENE UNDER COMPRESSION.
- D. "NOTE: IF CABLE INSULATION IS DAMAGED BY HEAT, IF CABLE IS SQUEEZED WITH PLIERS OR VISE, OR IF WIRE IS CUT TOO SHORT, THE CABLE MUST BE REPLACED.

II. PREPARATION OF CABLE:
- A. CUT CABLE INTO LENGTHS 1/2" LONGER THAN REQUIRED. THE PREPARED LENGTH SHOULD BE AT LEAST 3/8" LONGER THAN THE DISTANCE BETWEEN PLUG CENTERS. THE CABLE SHOULD LIE FLAT FOR 24 HOURS BEFORE ASSEMBLY TO ALLOW THE INSULATION TO CONTRACT, SINCE THIS WILL HAVE STRETCHED SLIGHTLY DUE TO COILING. SEAL CUT ENDS WITH LIQUID POLYSTYRENE TO PREVENT MOISTURE ENTRANCE AND WRAP WITH TAPE FOR MECHANICAL PROTECTION UNTIL READY FOR USE. "CAUTION:- CABLE MUST BE HANDLED WITH GREAT CARE: SQUEEZING CABLE IN VISE WILL DESTROY ELECTRICAL PROPERTIES.

III. ASSEMBLY OF SOCKETS ON CABLE:
- A. REMOVE PROTECTIVE COVERING AND PREPARE CABLE ENDS AS SHOWN BY DRAWING. THESE DIMENSIONS ARE IMPORTANT AND MUST BE HELD AS CLOSELY AS PRACTICABLE.
- B. SLIDE THE CLAMPING SLEEVE (1) ONTO THE CABLE PAST THE CUT-OFFS.
- C. UNWEAVE THE SHIELD BRADING WITH A BLUNT INSTRUMENT AND PARALLEL ALL STRANDS BEFORE SLIDING THE LARGE FERRULE (3) OVER THE SHIELDING AND SEATING IT FIRMLY AGAINST THE OUTER CABLE COVERING.
- D. SPLAY ALL THE SHIELD "HAIRS" OUT EVENLY AROUND THE BELL OF THE LARGE FERRULE (3) AND PRESS THE SMALL FERRULE (4) BETWEEN THE SHIELD AND THE POLYTHENE INSULATION, TRIM SHIELD "HAIRS" DOWN TO THE FERRULE. NOTE: EVERY BIT OF THE SHIELDING MUST BE BETWEEN THE TWO FERRULES FOR THE REST OF THE ASSEMBLY.
- E. SLIDE THE ASSEMBLY SLEEVE (6) BACK ONTO THE CABLE AND CAREFULLY PUSH THE PREPARED CABLE END THROUGH THE ELBOW (5) UNTIL THE FERRULES REACH THE BEND. EXTREME CARE MUST BE EXERCISED TO PREVENT SPLITTING OR OTHERWISE DAMAGING THE POLYTHENE INSULATION.
- F. THREAD THE CONDUCTORS THROUGH THE INNER INSERT (7) AND STRAIGHTEN SO THERE WILL BE NO SIDE PRESSURE ON THE INSULATION.
- G. LIGHTLY TIN THE CONDUCTORS AND SOLDER TO SOCKET-PINS (13); SEAT THE PINS BACK IN THE INNER INSERT (7) AND SLIDE THE ASSEMBLY BACK INTO THE ELBOW.
- H. INSERT THE FERRULE SEAT RING (2) AND SECURELY TIGHTEN THE CLAMPING SLEEVE (1).
- I. PUT ON THE CONNECTING SLEEVE (8) AND THE PLUG SHELL (9) IN ORDER, MAKING SURE THE KEYS AND THE KEY-WAYS LINE UP. INSTALL OUTER INSERT (14).
- J. INSERT AND TIGHTEN THE ASSEMBLY SCREWS (12) AND SCREW HOME THE ASSEMBLY SLEEVE (6).

CUSTOMER INSTALLED ON 52 SHIPS — #1 TO 90 #88477, 91 & UP #88476

#GOV'T FURNISHED EQUIP'T.

@MAY BE PURCHASED FROM AMERICAN PHENOLIC CORP.

ASSY. DASH NO.	MODEL	NEXT ASSY.	QUAN.
-7	PBC-5B	28F5003	1
-6	PBC-5	28F5412	1
-6	PBC-5A	28F5413	1

REQUIREMENTS PER AIRPLANE

REPLACES — CALC WT.

REPLACED BY — ACT WT.

UNLESS OTHERWISE SPECIFIED ±0.1 — SCALE

STAMP PART NUMBER WHERE SHOWN

PART NO	STOCK	MATERIAL	SPEC.	LH REQ.	RH REQ.	LH REQ.	RH REQ.	LH REQ.	RH REQ.	LH REQ.	RH REQ.	LH REQ.	RH REQ.
PARTS LIST PER ASSY.				-0		-3		-4		-5			
@PLUG 10W/420 TYPE K6				1									
-11 8A4C CABLE X 81				1									
-7 SUB ASSY.													
@PLUG 10W/420 TYPE K6						1							
-10 8A4C CABLE X 50.96"						1							
-6 SUB ASSY.													

A.C. —	—	LESH	3-2-42			PACK	JESS	
NAVY —	—				3-23		WOLD	3/20
HEAT TREAT	FINISH	DRAFT	CHECK	STRUCT	MAT	APPROV	ENG.	

NAME CABLE - FURN - XMTR JUNCTION BOX TO XMTR. ANTENNA C.O. SWITCH

CONSOLIDATED AIRCRAFT CORP. SAN DIEGO, CALIF.

OPP. HAND

DWG. SIZE D — 28F5388

Ron Kelly 3/16/42

R2

LET	ALTERATION	DATE	BY

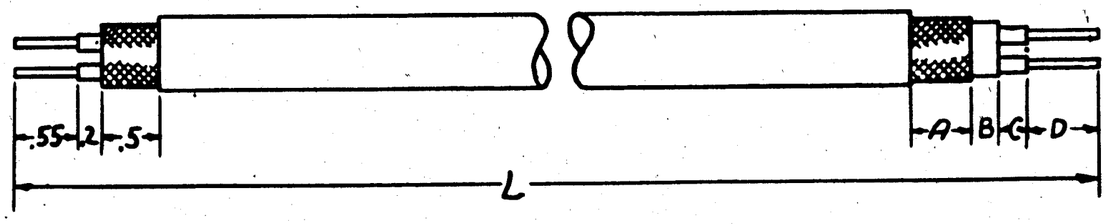

DASH No.	A	B	C	D	L
-6	1.63	.2	.2	.6	59.75
-7	.5	.15	.2	.4	54.75

Notes:

1. PERTINENT INFORMATION

(A) LENGTH OF CABLE WILL BE APPROXIMATE. EXACT LENGTHS FOR EACH "BATCH" OF CABLE WILL BE DETERMINED BY TEST & SUPPLIED TO SHOP BY RADAR TEST GROUP.

(B.) SINCE THE POLYTHENE INSULATION OF THE CABLE MELTS AT 80° C., TINNING MUST BE DONE QUICKLY WITH A CLEAN HOT IRON TO PREVENT SPOILING THE CABLE.

(C.) CABLE CANNOT BE BENT IN LESS THAN A 10" RADIUS DUE TO "COLD FLOW" PROPERTIES OF POLYTHENE UNDER COMPRESSION.

(D) NOTE: IF CABLE INSULATION IS DAMAGED BY HEAT, IF CABLE IS SQUEEZED WITH PLIERS OR VISE, OR IF WIRE IS CUT TOO SHORT, THE CABLE MUST BE REPLACED.

2. PREPARATION OF CABLE

(A) AFTER BEING CUT TO LENGTH, THE CABLE SHOULD LIE FLAT FOR 24 HOURS BEFORE ASSEMBLY TO ALLOW THE INSULATION TO CONTRACT, SINCE THIS WILL HAVE STRETCHED SLIGHTLY DUE TO COILING. SEAL CUT ENDS WITH LIQUID POLYSTRENE TO PREVENT MOISTURE ENTRANCE AND WRAP WITH TAPE FOR MECHANICAL PROTECTION UNTIL READY FOR USE.

* CAUTION: CABLE MUST BE HANDLED WITH GREAT CARE SQUEEZING CABLE IN VISE WILL DESTROY ELECTRICAL PROPERTIES.

#88477
#91876
#88476
TO BE CUSTOMER INSTALLED ON 5 FIRST 52 SWIRS

* GOV'T. FURNISHED EQUIP'T.

RUSH RELEASED
3/16/42

ASSY. DASH No.	MODEL	NEXT ASSY.	REQ.
-7	PBY-5B	28F10075	2
-6	PBY-5	28F5413	2
-6	PBY-5A	28F5413	2

REQUIREMENTS PER AIRPLANE

REPLACES — CALC. WT.

REPLACED BY — ACT. WT.

LIST ON DRAWINGS UNLESS OTHERWISE SPECIFIED — SCALE 12" = 1'-0"

± 0.1

STAMP PART NUMBER WHERE SHOWN

PART No.	STOCK	MATERIAL	SPEC.	LH REQ. -0	RH REQ. -0	LH REQ. -2	RH REQ. -2	LH REQ. -3	RH REQ. -3	LH REQ. -4	RH REQ. -4	LH REQ. -5	RH REQ. -5
-7	* BASIC CABLE EX 60-13												
	* BASIC CABLE EX 55-13												

PARTS LIST PER ASSY.

AC —	—	LESH	3-24-42	ORDER	BALAN	PROM	JCK
NAVY —	—			APPROV		3-23-42		WHB
HEAT TREAT	FINISH	DRAFT	CHECK	STRUCT	MAT	APPROV	ENG

OPP. HAND —

NAME CABLE - FURN. - YAGI XMTR. ARRAY TO XMTR. ANT. JUNCTION BOX

CONSOLIDATED AIRCRAFT CORP. San Diego, Calif.

DWG. SIZE D — 28F5389

P

LET	ALTERATION	DATE	BY

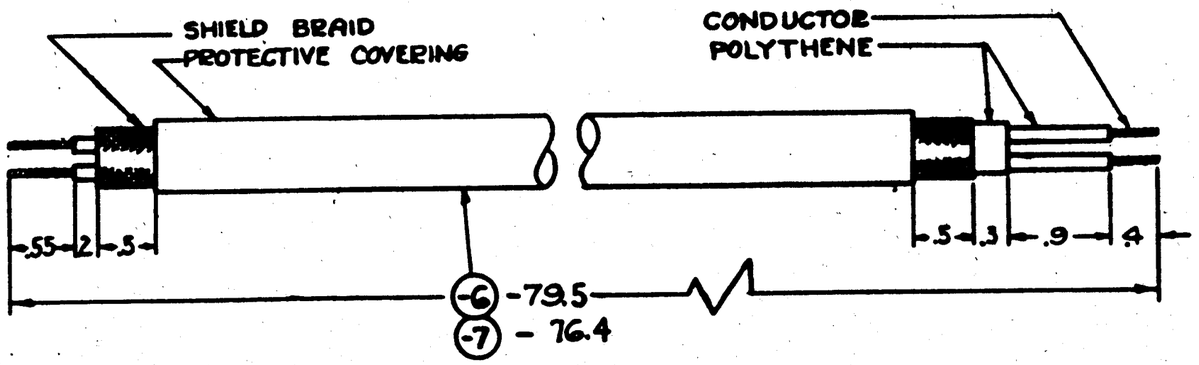

~ NOTES ~

I — PERTINENT INFORMATION

A. LENGTH OF CABLE WILL BE APPROXIMATE. EXACT LENGTHS FOR EACH "BATCH" WILL BE DETERMINED BY TEST & SUPPLIED TO SHOP BY RADAR TEST GROUP.

B. SINCE THE POLYTHENE INSULATION OF THE CABLE MELTS AT 80°C, TINNING MUST BE DONE QUICKLY WITH A CLEAN HOT IRON TO PREVENT SPOILING THE CABLE.

C. CABLE CANNOT BE BENT IN LESS THAN A 10" RADIUS DUE TO "COLD-FLOW" PROPERTIES OF POLYTHENE UNDER COMPRESSION.

D. NOTE: IF CABLE INSULATION IS DAMAGED BY HEAT, IF CABLE IS SQUEEZED WITH PLIERS OR VISE, OR IF WIRE IS CUT TOO SHORT, THE CABLE MUST BE RE-PLACED.

II — PREPARATION OF CABLE:

A. AFTER BEING CUT TO LENGTH, THE CABLE SHOULD LIE FLAT FOR 24 HOURS BEFORE ASSEMBLY TO ALLOW THE INSULATION TO CONTRACT, SINCE THIS WILL HAVE STRECHED SLIGHTLY DUE TO COILING. SEAL CUT ENDS WITH LIQUID POLYSTRENE TO PREVENT MOISTURE ENTRANCE & WRAP WITH TAPE FOR MECHANICAL PROTECTION UNTIL READY FOR USE.

* CAUTION: - CABLE MUST BE HANDLED WITH GREAT CARE: SQUEEZING CABLE IN VISE WILL DESTROY ELECTRICAL PROPERTIES.

TO BE CUSTOMER INSTALLED ON 52 AIRPLANES → #88477 #88476 #88476

*GOV'T FURNISHED EQUIP'T.

RUSH RELEASED 3/16/42

DASH NO.	MODEL	NEXT ASSY.	REQ'D
-7	PBY-5A	28F1003	8
-6	PBY-5	28F1003	8
-	PBY-5A	28F1003	8

REQUIREMENTS PER AIRPLANE

REPLACES — ORIG. QTY.

REPLACED BY — REV. QTY.

SCALE 12" = 1'-0"

± 0.1

(EXCEPT PART NUMBERS WHERE SHOWN)

PART No.	STOCK	MATERIAL	SPEC.	-0 LH REQ.	-0 RH REQ.	-2 LH REQ.	-2 RH REQ.	-3 LH REQ.	-3 RH REQ.	-4 LH REQ.	-4 RH REQ.	-5 LH REQ.	-5 RH REQ.
-7		CABLE	X 76.75										
-6		CABLE	X 79.25										

PARTS LIST PER ASSY.

AC —	—		DRAWN	CHECK	STRUCT	MAT	APPROV
NAVY —	—		3-18-42		3-23		WLD 3/20
HEAT TREAT	FINISH	DRAFT					ENG

NAME CABLE-FURN-YAGI RECEIVER ANTENNA TO YAGI RECEIVER MATCHING UNIT

OPP. HAND —

CONSOLIDATED AIRCRAFT CORP. SAN DIEGO, CALIF.

SIZE D DWG. 28F5391

R 3/24/42

LET	ALTERATION	DATE	BY
	E.O. A52184		
A	REVISED B.M. & REQ/AIRPL'N		
	BL'K. ADDED -11, -12, & -13		
	SUB-ASSEMBLIES TO FACE		
	NO WT CHG.	9-16-42	MARSH
B	28F5496 NEXT ASSY RESTRICTED		
	TO 88476(53 ON) & 91876(91 ON)	9-27-42	BARCH
C	MODEL PBY-5 NEXT ASSY		
	REMOVED FROM B/M FOR		
	CONT. NO. 91876 (90 ON)	10-13-42	[illegible]
	CHANGED "A" ON -7 FROM 28F496 TO 28F6285		
	E.O. A59787		
D	IN B/M IN -11 & -12 SUB ASSY.		
	10H/701 COAX. PLUG (2) WAS (4)		
	4 COAX. CABLE (1) WAS (2) IN -13		
	SUB-ASSY. COAX. PLUG (1) WAS (4)		
	8 COAX. CABLE (1) WAS (2) & ADDED		
	10H/701 COAX. PLUG (1). NO WT. CHG.	10/5/42	FUNK

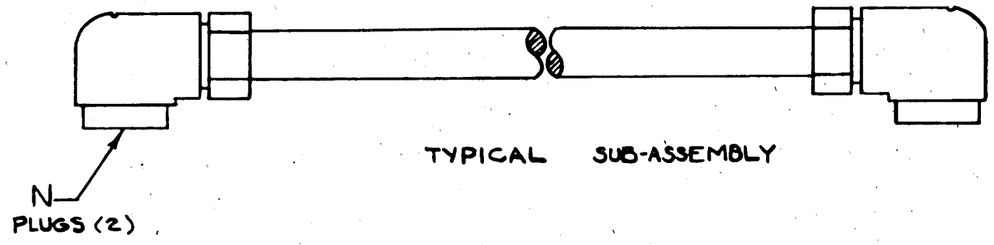

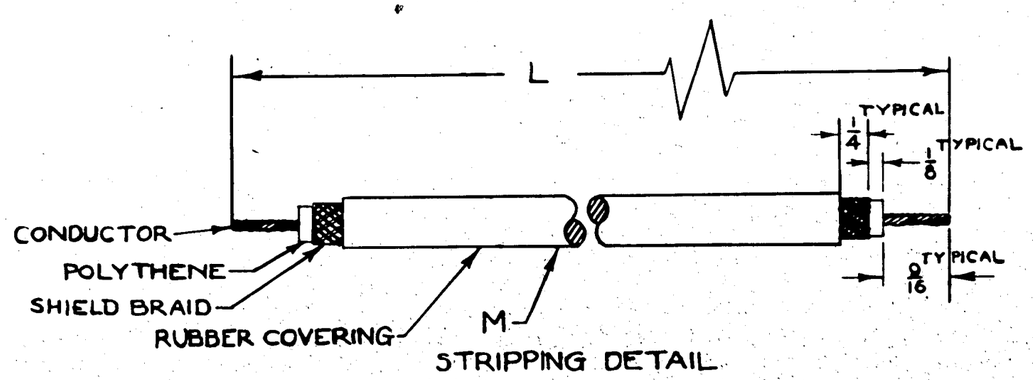

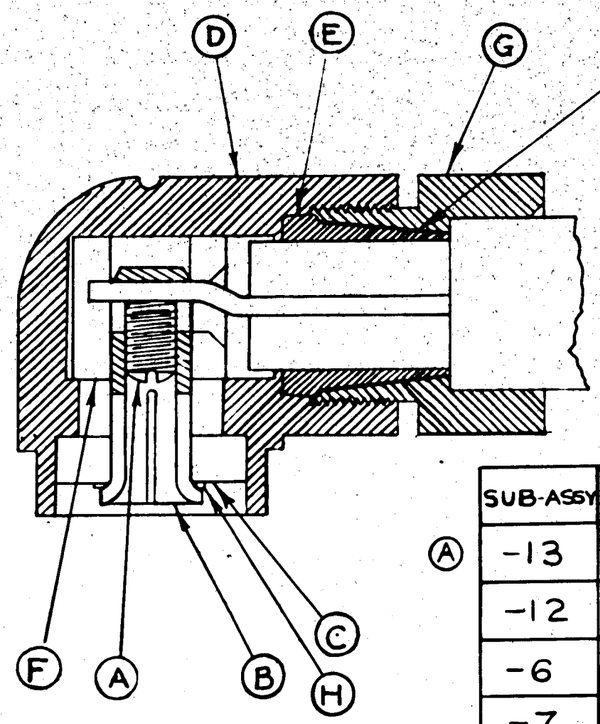

Ⓑ +88476(53 ON)
○ 70496, 91876(1-89)
77713, 70496
88476 (1-52)

Ⓐ

SUB-ASSY	L	M	N
-13	3'-10"	-27	10H/701
-12	32'	-26	10H/701
-6	35'	-20	10H/701
-7	12'	-21	"
-8	11'	-22	"
-9	5'6"	-23	10H/529
-10	11'	-24	"
-11	4½'	-25	10H/701

NOTES:

1. (1) LENGTH "L" OF CABLE WILL BE APPROXIMATE. EXACT LENGTHS FOR EACH "BATCH" OF CABLE WILL BE DETERMINED BY TEST & SUPPLIED TO SHOP BY RADAR TEST GROUP.
   (2) SINCE THE POLYTHENE INSULATION OF THE CABLE MELTS AT 80° C. TINNING MUST BE DONE QUICKLY WITH A CLEAN HOT IRON TO PREVENT SPOILING THE CABLE.
   (3) CABLE CANNOT BE BENT IN LESS THAN A 10" RADIUS DUE TO "COLD-FLOW" PROPERTIES OF POLYTHENE UNDER COMPRESSION.
   (4) NOTE: IF CABLE INSULATION IS DAMAGED BY HEAT, IF CABLE IS SQUEEZED WITH PLIERS OR VISE, OR IF WIRE IS CUT TOO SHORT, THE CABLE MUST BE REPLACED.
2. PREPARATION OF CABLE:
   CUT CABLE INTO LENGTHS 1/2" LONGER THAN REQUIRED. THE PREPARED LENGTH SHOULD BE AT LEAST 3/8" LONGER THAN THE DISTANCE BETWEEN PLUG CENTERS. THE CABLE SHOULD LIE FLAT FOR 24 HOURS BEFORE ASSEMBLY TO ALLOW THE INSULATION TO CONTRACT, SINCE THIS WILL HAVE STRETCHED SLIGHTLY DUE TO COILING. SEAL CUT ENDS WITH LIQUID POLYSTYRENE TO PREVENT MOISTURE ENTRANCE & WRAP WITH TAPE FOR MECHANICAL PROTECTION UNTIL READY FOR USE. CAUTION: CABLE MUST BE HANDLED WITH GREAT CARE; SQUEEZING CABLE IN VISE WILL DESTROY ELECTRICAL PROPERTIES.
3. ASSEMBLY OF SOCKET ON CABLE:
   (1) REMOVE THE PROTECTIVE COVERING OVER THE SHIELD BRAID FOR A DISTANCE OF 15/16" FROM THE CABLE END AND PUSH THE CLAMPING SCREW (G) OVER THE END OF THE CABLE SO THE SHOULDER IS FIRMLY SEATED AGAINST THE RUBBER COVERING. IT MUST BE KEPT IN POSITION THROUGHOUT THE ASSEMBLY.
   (2) UNWEAVE THE PROTRUDING SHIELD BRAID WITH A BLUNT INSTRUMENT AND SPLAY EVENLY BEFORE PASSING THE SLEEVE (E) UNDER THE BRAID INTO THE CLAMPING SCREW (G). PRESS THE SLEEVE INTO THE CLAMPING SCREW AS HARD AS POSSIBLE BY HAND. TRIM OFF THE PROTRUDING STRANDS OF BRAID AS CLOSE TO THE CLAMPING SCREW AS POSSIBLE.
   (3) THE INSULATION SHOULD NOT PROTRUDE MORE THAN 1/8" FROM THE SLEEVE & THE BARE CONDUCTOR SHOULD PROTRUDE 9/16".
   (4) TWIST THE STRANDED CONDUCTOR TIGHTLY WITH FLAT-NOSE PLIERS & LIGHTLY TIN.
   (5) FIT THE MOLDED SPACER (F) IN THE SOCKET BODY (D) SO THAT THE SMALL HOLE IS OPEN TO THE CABLE ENTRANCE AND THE LARGE HOLE POSITIONED TO RECEIVE THE SOCKET (B).
   (6) PLACE THE SPRING RING (H) AND THE MOLDED WASHER (C) IN TURN OVER THE SOCKET (B), BEFORE FITTING IT INTO THE MOLDED SPACER (F) ALREADY IN POSITION IN THE PLUG SHELL (D).
   (7) TIGHTEN PLUG SHELL (D) ONTO CLAMPING SCREW (G) AND TAKE-UP ON LOCK-SCREW (A) UNTIL CABLE CONDUCTOR IS FIRMLY CLAMPED, NOT SMASHED.

*NOTE: ALL EQUIPMENT GOV'T. FURNISHED.

ASSY. DASH NO.	MODEL	NEXT ASSY.	REQ.
-10	PBY-5A	28F5496	1
-9	PBY-5A	28F5496	2
-13	PBY-5A	28F5496	2
-12	PBY-5A	28F5496	2
-11	PBY-5A	28F5496	2
-10	PBY-5A	28F6285	1
-9	PBY-5A	28F6285	2
-8	PBY-5A	28F6285	2
-7	PBY-5A	28F6285	2
-6	PBY-5A	28FT320	2
-10	PBY-5	28F6285	1
-9	PBY-5	28F6285	2
-8	PBY-5	28F6285	2
-7	PBY-5	28F6285	2
-6	PBY-5	28FT320	2

REQUIREMENTS PER AIRPLANE

REPLACES — CALC. WT.

REPLACED BY 4J OF 28F6940 #41 — 9/16/42 — ACT. WT.

UNIT OR OVERSIZE UNLESS OTHERWISE SPECIFIED ± 1/32 — SCALE

STAMP PART NUMBER WHERE SHOWN

PART NO	STOCK	MATERIAL	SPEC	LT RH REQ -0	LH REQ -2'	RH REQ -3	LH REQ -4	RH REQ -5
	10H/701	COAXIAL PLUG (SINGLE)		1				
	*10H/701	COAXIAL PLUG (SINGLE)		1				
	*	-27 PT 5 COAXIAL CABLE X 3'-10"		1				
		← -13 SUB-ASS'Y →						
	10H/529	COAXIAL PLUG (SINGLE)			2			
	*	-24 AS48C COAXIAL CABLE X 11'			1			
		← -10 SUB-ASS'Y →						
	*10H/529	COAXIAL PLUG (SINGLE)		2				
	*	-23 AS48C COAXIAL CABLE X 5'6"		1				
		← -9 SUB-ASS'Y →						
	*10H/701	COAXIAL PLUG (SINGLE)		2				
	*	-22 PT-5C COAXIAL CABLE X 11'		1				
		← -8 SUB ASS'Y. →						
	*10H/701	COAXIAL PLUG (SINGLE)		2				
	*	-21 PT-5C COAXIAL CABLE X 12'		1				
		← -7 SUB ASS'Y. →						
	*10H/701	COAXIAL PLUG (SINGLE)		2				
	*	PT-5C COAXIAL CABLE X 35'		1				
		← -6 SUB ASS'Y. →						
	10H/701	COAXIAL PLUG (SINGLE)			2			
	*	-26 PT 5 COAXIAL CABLE X 32'0"			1			
		← -12 SUB ASS'Y. →						
	10H/701	COAXIAL PLUG (SINGLE)			2			
	*	-25 PT5C COAXIAL CABLE X 4'-6			1			
		← -11 SUB ASS'Y →						

PARTS LIST PER ASSY.

AC			DRAWING	[illegible]
NAVY			WIRE IDENT	9-41
HEAT TREAT	FINISH		DRAFT	CHECK / STRUCT / MAT / APPROV / ENG

NAME CABLE S - FURN-RADAR SINGLE CONDUCTOR TRANSMISSION LINES

OPP HAND USE

CONSOLIDATED AIRCRAFT CORP. SAN DIEGO, CALIF.

DWG D SIZE 28F5392

R

LET	ALTERATION	DATE	BY

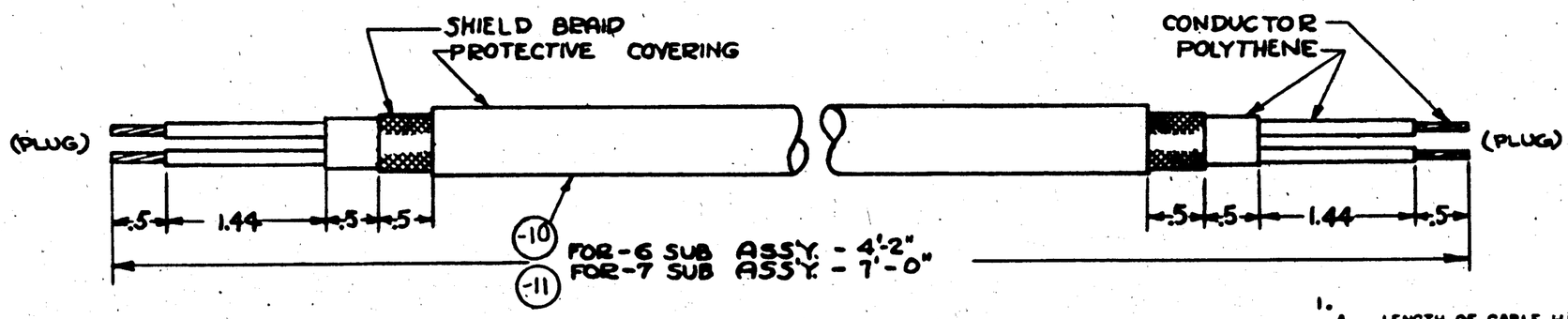

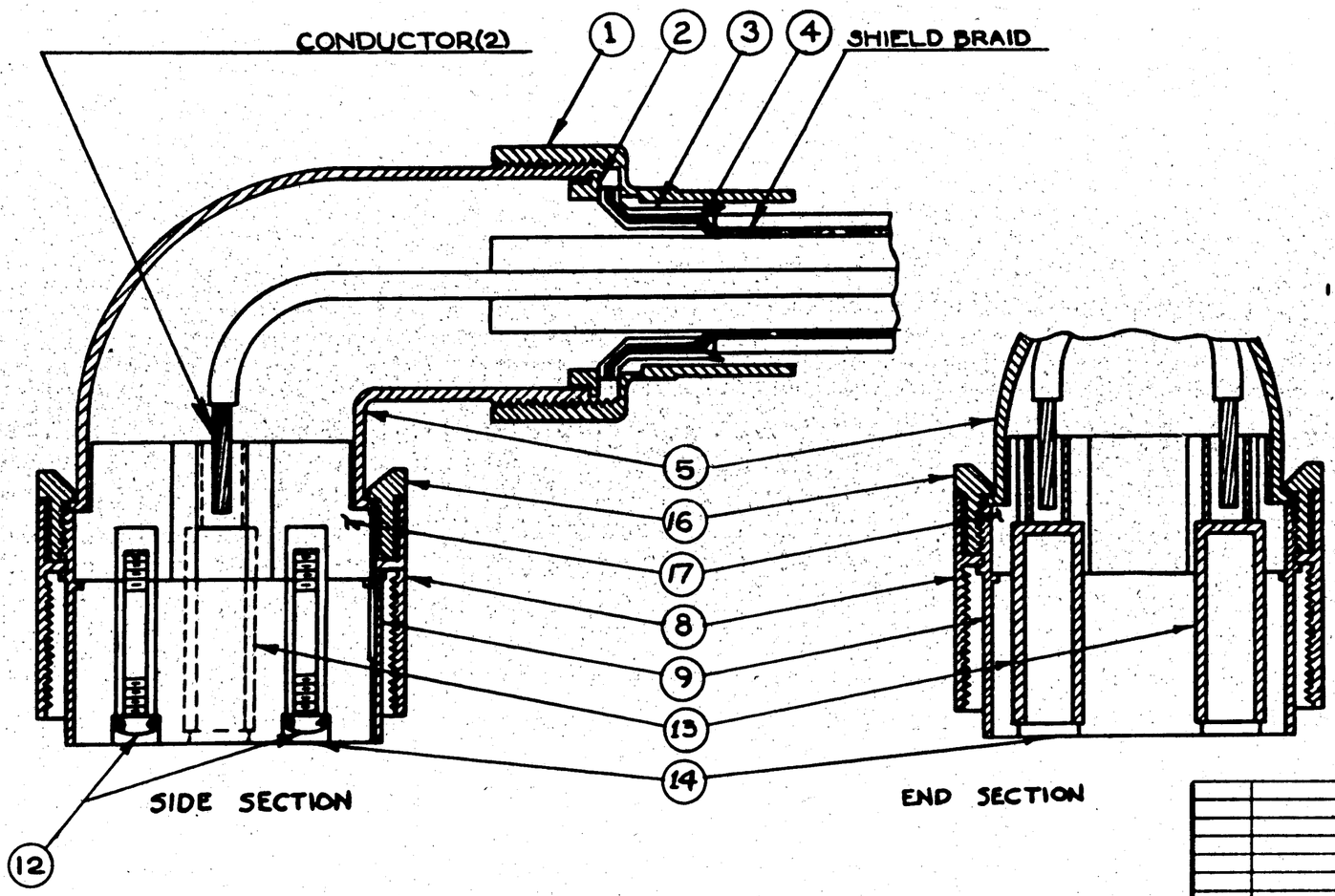

NOTES:

I.
- A. LENGTH OF CABLE WILL BE APPROXIMATE. EXACT LENGTHS FOR EACH "BATCH" OF CABLE WILL BE DETERMINED BY TEST AND SUPPLIED TO SHOP BY RADAR TEST GROUP.
- B. SINCE THE POLYTHENE INSULATION OF THE CABLE MELTS AT 80° C., TINNING MUST BE DONE QUICKLY WITH A CLEAN HOT IRON TO PREVENT SPOILING THE CABLE.
- C. CABLE CANNOT BE BENT IN LESS THAN A 10° RADIUS DUE TO "COLD FLOW" PROPERTIES OF POLYTHENE UNDER COMPRESSION.
- D. *NOTE; IF CABLE INSULATION IS DAMAGED BY HEAT, IF CABLE IS SQUEEZED WITH PLIERS OR VISE, OR IF WIRE IS CUT TOO SHORT, THE CABLE MUST BE REPLACED.

II. PREPARATION OF CABLE;
- A. CUT CABLE INTO LENGTHS 1/2" LONGER THAN REQUIRED. THE PREPARED LENGTH SHOULD BE AT LEAST 3/8" LONGER THAN THE DISTANCE BETWEEN PLUG CENTERS. THE CABLE SHOULD LIE FLAT FOR 24 HOURS BEFORE ASSEMBLY TO ALLOW THE INSULATION TO CONTRACT, SINCE THIS WILL HAVE STRETCHED SLIGHTLY DUE TO COILING. SEAL CUT ENDS WITH LIQUID POLYSTYRENE TO PREVENT MOISTURE ENTRANCE AND WRAP WITH TAPE FOR MECHANICAL PROTECTION UNTIL READY FOR USE. *CAUTION;- CABLE MUST BE HANDLED WITH GREAT CARE; SQUEEZING CABLE IN VISE WILL DESTROY ELECTRICAL PROPERTIES.

III. ASSEMBLY OF SOCKETS ON CABLE;
- A. REMOVE PROTECTIVE COVERING AND PREPARE CABLE ENDS AS SHOWN BY DRAWING. THESE DIMENSIONS ARE IMPORTANT AND MUST BE HELD AS CLOSELY AS PRACTICABLE.
- B. SLIDE THE CLAMPING SLEEVE (1) ONTO THE CABLE PAST THE CUT-OFFS.
- C. UNWEAVE THE SHIELD BRAIDING WITH A BLUNT INSTRUMENT AND PARALLEL ALL STRANDS BEFORE SLIDING THE LARGE FERRULE (3) OVER THE SHIELDING AND SEATING IT FIRMLY AGAINST THE OUTER CABLE COVERING.
- D. SPLAY ALL THE SHIELD "HAIRS" OUT EVENLY AROUND THE BELL OF THE LARGE FERRULE (3) AND PRESS THE SMALL FERRULE (4) BETWEEN THE SHIELD AND THE POLYTHENE INSULATION, TRIM SHIELD "HAIRS" DOWN TO THE FERRULE. NOTE; EVERY BIT OF THE SHIELDING MUST BE BETWEEN THE TWO FERRULES FOR THE REST OF THE ASSEMBLY.
- E. SLIDE THE ASSEMBLY SLEEVE (16) BACK ONTO THE CABLE AND CAREFULLY PUSH THE PREPARED CABLE END THROUGH THE ELBOW (5) UNTIL THE FERRULES REACH THE BEND. EXTREME CARE MUST BE EXERCISED TO PREVENT SPLITTING OR OTHERWISE DAMAGING THE POLYTHENE INSULATION.
- F. THREAD THE CONDUCTORS THROUGH THE INNER INSERT (17) AND STRAIGHTEN SO THERE WILL BE NO SIDE PRESSURE ON THE INSULATION.
- G. LIGHTLY TIN THE CONDUCTORS AND SOLDER TO SOCKET-PINS (18); SEAT THE PINS BACK IN THE INNER INSERT (17) AND SLIDE THE ASSEMBLY BACK INTO THE ELBOW.
- H. INSERT THE FERRULE SEAT RING (2) AND SECURELY TIGHTEN THE CLAMPING SLEEVE (1)
- I. PUT ON THE CONNECTING SLEEVE (8) AND THE PLUG SHELL (9) IN ORDER, MAKING SURE THE KEYS AND THE KEY-WAYS LINE UP, INSTALL OUTER INSERT (14).
- J. INSERT AND TIGHTEN THE ASSEMBLY SCREWS (12) AND SCREW HOME THE ASSEMBLY SLEEVE (15).

CUSTORMER INSTALLED ON 52 SHIPS → #88477 #91876 #88476

*GOV'T. FURNISHED EQUIP'T.

⊕ MAY BE PURCHASED FROM AMERICAN PHENOLIC CORP

RUSH RELEASED 3/16/42

ASSY DASH No.	MODEL	NEXT ASSY.
-7	PBY-5B	28F7314
-6	PBY-5	28F6285
-6	PBY-5A	28F6285

REQUIREMENTS PER AIRPLANE

REPLACED —

REPLACED BY —

CALC WT.

ACT. WT.

SCALE

±0.1

STAMP PART NUMBER WHERE SHOWN

⊕ PLUG-10H/420 TYPE W166 2
-11* BASC CABLE X7: 0.38" 1
-7 SUB ASSY.
* PLUG-10H/420 TYPE W166 2
-10* BASC CABLE X9: 2.38" 1
-6 SUB ASSY.

PART No	STOCK	MATERIAL	SPEC.	LH REQ.	RH REQ.	LH REQ.	RH REQ.	LH REQ.	RH REQ.	LH REQ.	RH REQ.	LH REQ.	RH REQ.
PARTS LIST PER ASSY.				-0		-2		-3		-4		-5	

AC —	—	LEISH	DORNER-HAYES	GERBER	BALLARD	MAGNL	J.F.H.	
NAVY —	—	3-3-42	SIMS		3-23		WOLD	3/20
HEAT TREAT	FINISH	DRAFT	CHECK	STRUCT	MAT	APPROV	ENG	

NAME CABLE-FURN-XMTR. ANTENNA C.O. SWITCH TO T3040 XMTR.

OPP. HAND

CONSOLIDATED AIRCRAFT CORP. SAN DIEGO, CALIF.

DWG. D SIZE 28F5393

R1 4-2

LET	ALTERATION	DATE	BY

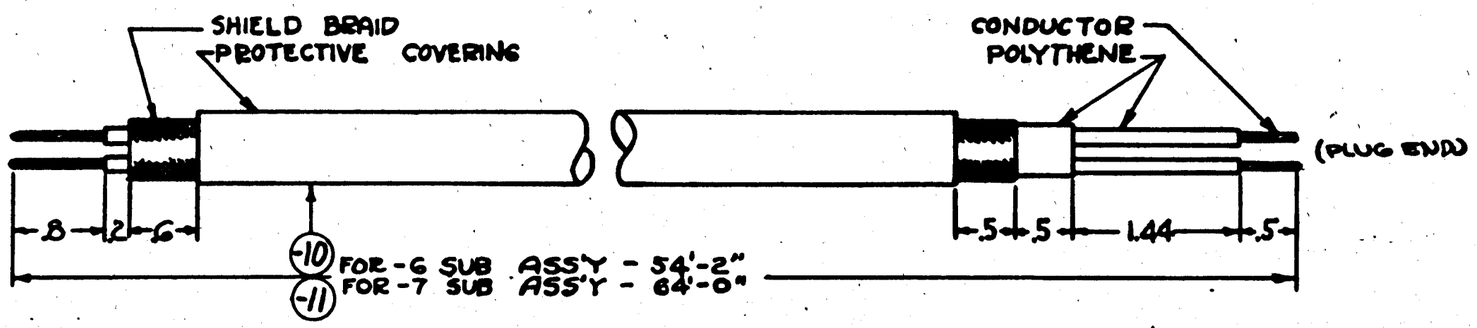

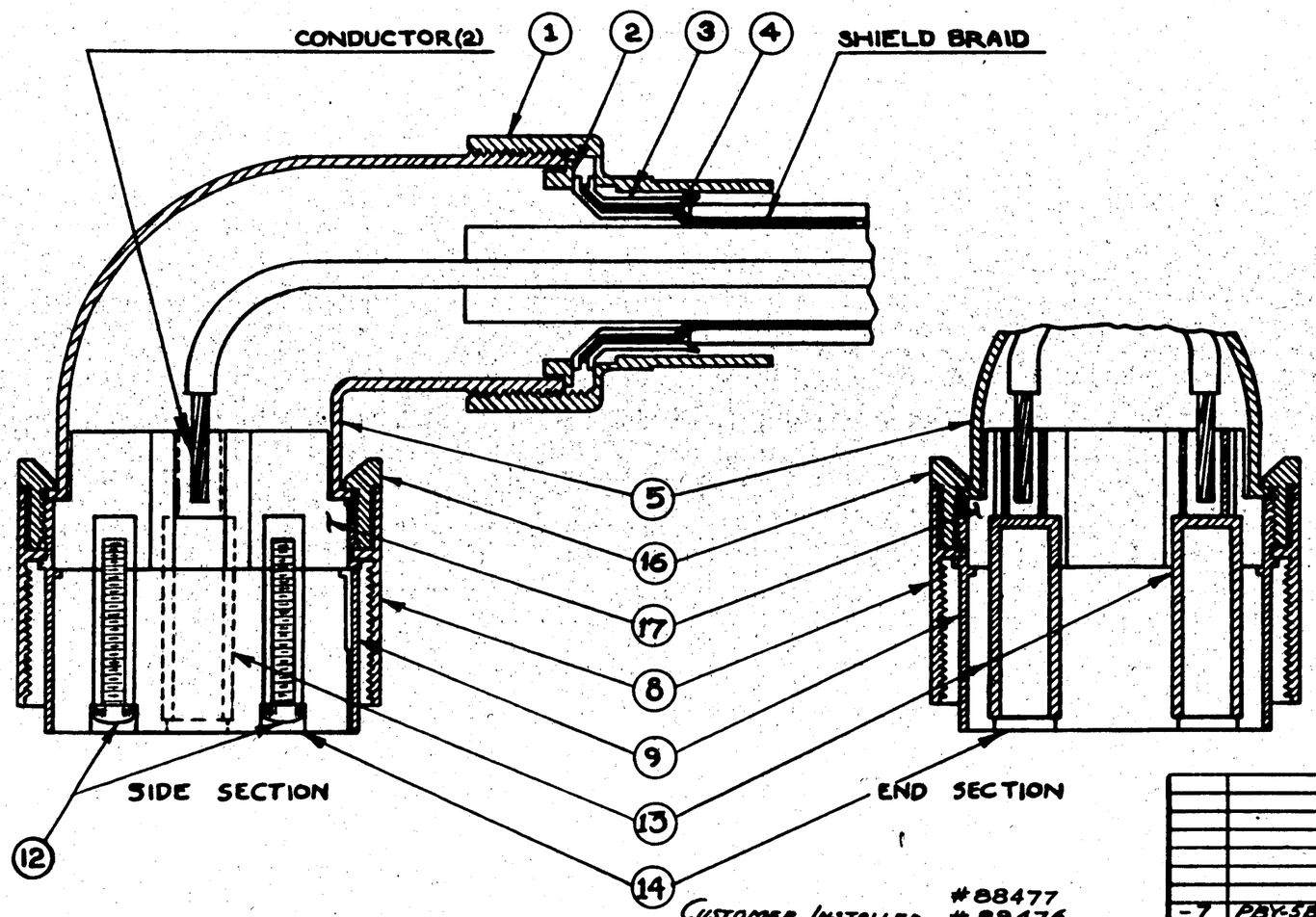

NOTES:

I.
- A. LENGTH OF CABLE WILL BE APPROXIMATE. EXACT LENGTHS FOR EACH "BATCH" OF CABLE WILL BE DETERMINED BY TEST AND SUPPLIED TO SHOP BY RADAR TEST GROUP
- B. SINCE THE POLYTHENE INSULATION OF THE CABLE MELTS AT 80° C., TINNING MUST BE DONE QUICKLY WITH A CLEAN HOT IRON TO PREVENT SPOILING THE CABLE.
- C. CABLE CANNOT BE BENT IN LESS THAN A 10" RADIUS DUE TO "COLD FLOW" PROPERTIES OF POLYTHENE UNDER COMPRESSION.
- D. "NOTE; IF CABLE INSULATION IS DAMAGED BY HEAT, IF CABLE IS SQUEEZED WITH PLIERS OR VISE, OR IF WIRE IS CUT TOO SHORT, THE CABLE MUST BE REPLACED.

II. PREPARATION OF CABLE;
- A. CUT CABLE INTO LENGTHS 1/2" LONGER THAT REQUIRED. THE PREPARED LENGTH SHOULD BE AT LEAST 3/8" LONGER THAN THE DISTANCE BETWEEN PLUG CENTERS. THE CABLE SHOULD LIE FLAT FOR 24 HOURS BEFORE ASSEMBLY TO ALLOW THE INSULATION TO CONTRACT, SINCE THIS WILL HAVE STRETCHED SLIGHTLY DUE TO COILING. SEAL CUT ENDS WITH LIQUID POLYSTYRENE TO PREVENT MOISTURE ENTRANCE AND WRAP WITH TAPE FOR MECHANICAL PROTECTION UNTIL READY FOR USE. "CAUTION:-CABLE MUST BE HANDLED WITH GREAT CARE; SQUEEZING CABLE IN VISE WILL DESTROY ELECTRICAL PROPERTIES.

III. ASSEMBLY OF SOCKETS ON CABLE;
- A. REMOVE PROTECTIVE COVERING AND PREPARE CABLE ENDS AS SHOWN BY DRAWING. THESE DIMENSIONS ARE IMPORTANT AND MUST BE HELD AS CLOSELY AS PRACTICABLE.
- B. SLIDE THE CLAMPING SLEEVE (1) ONTO THE CABLE PAST THE CUT-OFFS.
- C. UNWEAVE THE SHIELD BRAIDING WITH A BLUNT INSTRUMENT AND PARALLEL ALL STRANDS BEFORE SLIDING THE LARGE FERRULE (3) OVER THE SHIELDING AND SEATING IT FIRMLY AGAINST THE OUTER CABLE COVERING.
- D. SPLAY ALL THE SHIELD "HAIRS" OUT EVENLY AROUND THE BELL OF THE LARGE FERRULE (3) AND PRESS THE SMALL FERRULE (4) BETWEEN THE SHIELD AND THE POLYTHENE INSULATION, TRIM SHIELD "HAIRS" DOWN TO THE FERRULE. "NOTE; EVERY BIT OF THE SHIELDING MUST BE BETWEEN THE TWO FERRULES FOR THE REST OF THE ASSEMBLY.
- E. SLIDE THE ASSEMBLY SLEEVE (6) BACK ONTO THE CABLE AND CAREFULLY PUSH THE PREPARED CABLE END THROUGH THE ELBOW (5) UNTIL THE FERRULES REACH THE BEND. EXTREME CARE MUST BE EXERCISED TO PREVENT SPLITTING OR OTHERWISE DAMAGING THE POLYTHENE INSULATION.
- F. THREAD THE CONDUCTORS THROUGH THE INNER INSERT (17) AND STRAIGHTEN SO THERE WILL BE NO SIDE PRESSURE ON THE INSULATION.
- G. LIGHTLY TIN THE CONDUCTORS AND SOLDER TO SOCKET-PINS (12); SEAT THE PINS BACK IN THE INNER INSERT (17) AND SLIDE THE ASSEMBLY BACK INTO THE ELBOW.
- H. INSERT THE FERRULE SEAT RING (2) AND SECURELY TIGHTEN THE CLAMPING SLEEVE (1).
- I. PUT ON THE CONNECTING SLEEVE (8) AND THE PLUG SHELL (9) IN ORDER, MAKING SURE THE KEYS AND THE KEY-WAYS LINE UP, & INSTALL OUTER INSERT (14).
- J. INSERT AND TIGHTEN THE ASSEMBLY SCREWS (12) AND SCREW HOME THE ASSEMBLY SLEEVE (6).

ASSY DASH NO.	MODEL	NEXT ASSY.	REQ.
-7	PAY-5B	28F7320	1
-6	PAY-5A	28F7320	1
-6	PAY-5	28F7320	1

REQUIREMENTS PER AIRPLANE

REPLACES — CALC. WT. —

REPLACED BY — ADV. WT. —

SCALE

±0.1

STAMP PART NUMBER WHERE SHOWN

PART No.	STOCK	MATERIAL	SPEC.	LH BRD REQ. -0	RH BRD REQ. -2	LH REQ. -3	RH REQ. -4	LH REQ. -5	RH REQ.
	⊕ PLUG-MH420 TYPE W166			1					
	-11 * BA4C CABLE X 64' 0.38"					1			
	-7 SUB ASS'Y.								
	⊕ PLUG-MH420 TYPE W166					1			
	-10 * BA4C CABLE X 54' 2.38"							1	
	-6 SUB ASS'Y								

PARTS LIST PER ASSY.

AC —	—	LEASH 3-2-42	DRAWING	GERBER	DALLAM	PACHL	J.C.H
NAVY —	—		STRESS 3-11-42		3-23		WOLD
HEAT TREAT	FINISH	DRAFT	LAYOUT CHECK	STRUCT	ENGR	APPROV.	3/20

NAME CABLE - FUEN - XMTR. HOMING ARRAY TO XMTR. C.O. SWITCH

OPP. HAND —

CONSOLIDATED AIRCRAFT CORP. SAN DIEGO, CALIF.

SIZE D — 28F5394

#88477
CUSTOMER INSTALLED #88476
ON 52 SHIPS #91876

* GOV'T. FURNISHED EQUIP'T.
⊕ MAY BE PURCHASED FROM AMERICAN PHENOLIC CORP

RUSH RELEASED 3/16/42

R 4-42

CR 22147

LET	REVISION	DATE	BY
G	[illegible]		
H	CREATED -5 ASS'Y. IN BRK. BLOCK -5 FOR PBY-5A "BRP6955 WAS -5. ADDED WT. OF -5 ASS'Y. WT. OF -5 ASS'Y = 2.60	5-7-43 / 7-15-43	JR

E.O. A40965

LET	REVISION	DATE	BY
F	[illegible]		
B	[illegible]		
C	[illegible]		
	PBY-5 CONT NO. 91876 ADDED -7 FOR -5 ASSY. [illegible] ASSY FOR PBY-5 WAS [illegible] CREATED -5 ASSY, ADDED -8 FOR -5 ASSY		
D	IN C "HARNESS, CONT. NO. 91876 (5TH DIG. WAS CONT NO 91876- [illegible] NO WT CHG.	4-21-43	
E	IN CONNECTION DETAIL: RED, BLUE, ORANGE, GREEN, BROWN WHITE WAS BROWN WHITE RED, BLUE, ORANGE & GREEN [illegible] NO WT CHG.	5-21-43	
F	CREATED -5 ASSY. WT -5 ASSY [illegible]	5-21-43	
G	ON FACE OF DWG. 2 1/2 DIM. FROM FERRULE TO OUTSIDE OF [illegible]		

E.O. A63514
MCR #153

E.O. A74071

E.O. A92746
MCR 151-1-5

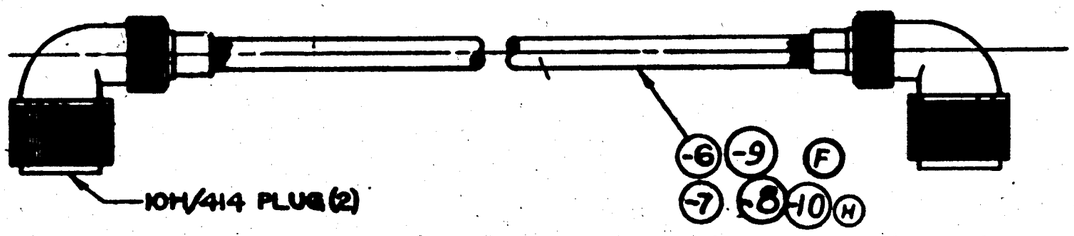

CABLE ASS'Y -0 & -2 & -3 & -4 & -5

WT. = 2.1 WT. = 2.34 WT. = 2.50 WT. = 1.60 WT. = 2.60 (H)

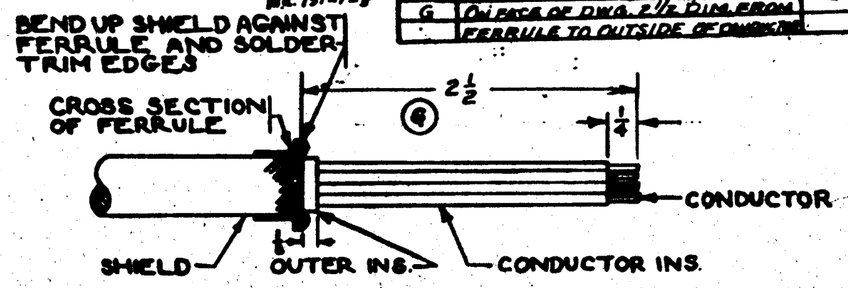

DETAIL OF CABLE END ATTACHING TO PLUG

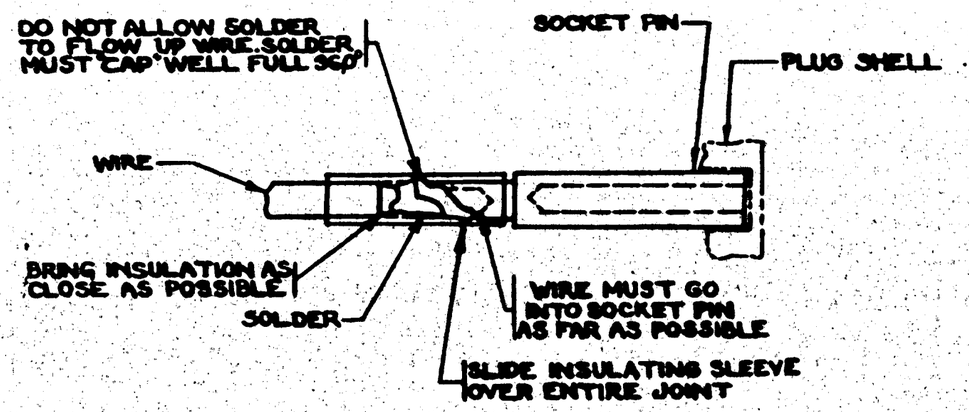

METHOD OF SOLDERING WIRE TO PIN

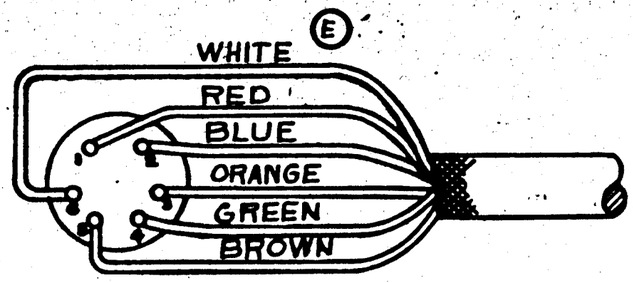

TYPICAL CONNECTION DETAIL OF CABLE TO PLUG

CHGS. as noted
C 91876 - "00 (-00 -0REN14-3
77713, 70496, 88476 (1-52)
91876 (1-88)
88476 (53 Fowler
91876 (104 ON)

ASSY. DASH NO.	MODEL	NEXT ASSY.	REQ.
-4	PBY-5A	28F6925	1
-5	PBY-5A	28F6955	1
-4	PBY-5	28F6925	1
-0	PBY-5A	28F6955	1
-0	PBY-5	28F6955	1
-2	PBY-5A	28F6955	1
-3	PBY5	28F6955	1

REQUIREMENTS PER AIRPLANE

REPLACES — NOT USED Calc. Wt.

REPLACED BY — Adv. Wt.

SCALE

STAMP PART NUMBER WHERE SHOWN

PART No.	STOCK	MATERIAL	SPEC.	LH REQ. -0	RH REQ. -2	LH REQ. -3	RH REQ. -4	LH REQ. -5	RH REQ.
	VINYLITE SLEEVING SL-7X1"			4	4	4	4	4	
	VINYLITE SLEEVING SL-6X1"			4	4	4	4	4	
	VINYLITE SLEEVING SL-6X1"			4	4	4	4	4	
	-9 6'-0" CABLE (DET. 7)						1		
	-10 5'-5" CABLE (DET. 7)								
10H/414 PLUG				2	2	2	2	2	
	-8 5'-0" CABLE (DET. 7)								
	-7 7'-3" CABLE (DET. 7)				1				
	-6 7'-6" CABLE (DET. 7)			1					

PARTS LIST PER ASSY.

* GOV'T. FURN. EQUIP.

NOTE:
WIRES MUST BE CAREFULLY PROTECTED FROM SHIELDING STRANDS TO PREVENT SHORTS.

1. CONTRACTOR INSTALLED ON CONT. 88476 (53 ON) & 91878

AC			
NAVY			
HEAT TREAT	FINISH	DRAFT 4-2-43	CHECK 4-2-43

STRUCT — STRESS — APPROV — ENG.

NAME CABLE-FURN: R3039 RECEIVER TO VISUAL INDICATOR-POWER

CONSOLIDATED AIRCRAFT CORP. San Diego, Calif.

OPP. HAND —

SIZE D — DWG. 28F5395

LET	ALTERATION	DATE	BY
J	TRACED NO WT. CHG.	10-6-43	TACKEN BATES

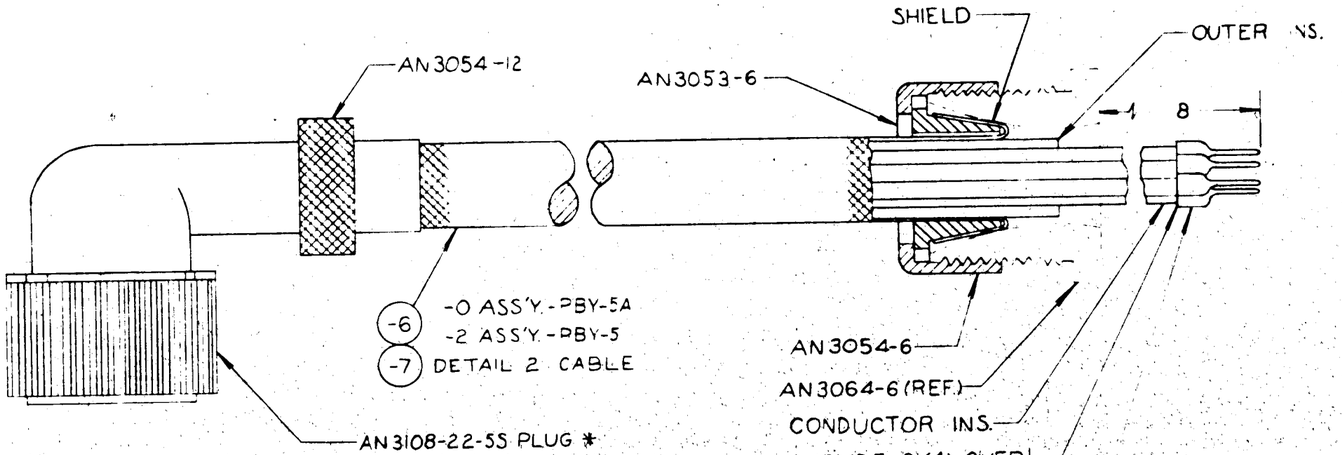

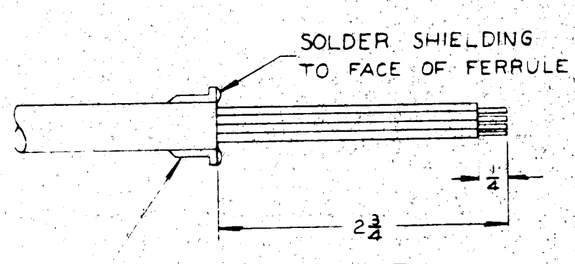

STRIPPING DETAIL

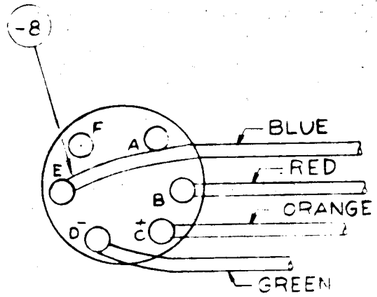

PLUG CONNECTION

NOTES-

1. * GOV'T. FURN. EQUIP.
2. CONTRACTOR INSTALLED ON 91876 & 88476. (53 & ON)

C.NO a (S) 464 #2-100
C 70496, 77713 & 884761-52
C88476 #53-#146
C91876 #90-586
C 91876 #1-89

ASS'Y	CALC. WT.
-0	.79 #
-2	1.19 #

ASSY. DASH No.	MODEL	NEXT ASSY.	REQ.
-2	PBY-5A	28F6955	1
-0	PBY-5A	28F6285	1
-0	PBY-5A	28F5496	1
-2	PBY-5	28F6955	1
-0	PBY-5	28F6285	1

REQUIREMENTS PER AIRPLANE

REPLACES 28F5396 OF 4-6-42 | NOTED CALC. WT.
REPLACED BY | ACT. WT.
LIMIT ON DIMENSIONS UNLESS OTHERWISE SPECIFIED ± —— | SCALE 24"=1'0"
STAMP PART NUMBER WHERE SHOWN

PART No.	STOCK	MATERIAL	SPEC.	LH REQ. -0	RH REQ. -0	LH REQ. -2	RH REQ. -2	LH REQ. -3	RH REQ. -3	LH REQ. -4	RH REQ. -4	LH REQ. -5	RH REQ. -5
AC660-50	LUG			4		4							
*AN3108-22-5S	PLUG			1		1							
AN3054-12				2		2							
AN3053-6				1		1							
28F7576				1		1							
-8	SL-6x1	VINOLITE	SLEEVING	8		8							
* -7	(DETAIL 2) x 88	CABLE		1		1							
* -6	(DETAIL 2) x 51	CABLE		1									

PARTS LIST PER ASSY.

AC		WITTEN BERG	DRAYNER	GERBER		GRONDONA	J.C.H.
NAVY		4-6-42	BOOHER 4-11-42		CUSTER 5-21-42		WOLD 5-20
HEAT TREAT	FINISH	DRAFT	CHECK	STRUCT.	MAT	APPROV	ENG.

OPP. HAND

NAME CABLE-FURN.-CONTROL PANEL TO RADIO PWR. JCT. BOX

CONSOLIDATED VULTEE AIRCRAFT CORP. SAN DIEGO DIVISION . . SAN DIEGO, CALIF.

DWG. SIZE D | 28F5396

28F5396

E.O. PR52192

LET	ALTERATION	DATE	BY
A	IN NEXT ASS'Y 28F5396 THIS		
	☆FE2283 AS W/ CAG	7-16-42	[illegible]
B	☆AE5396 NEXT ASS'Y RESTRICTED		
	TO USE ☆CAT (OLD FE2283)	7-28-42	[illegible]
	& CW) & SL-6 ADDED TO BOM		
C	REVISED CONT. NOTE SHTS.		
	(SEE BOM) FOR P&Y-5. REMOVED	9-16-42	[illegible]
	DEFENSE AID NEXT ASSY FOR		
	P&Y-5	9-16-42	[illegible]

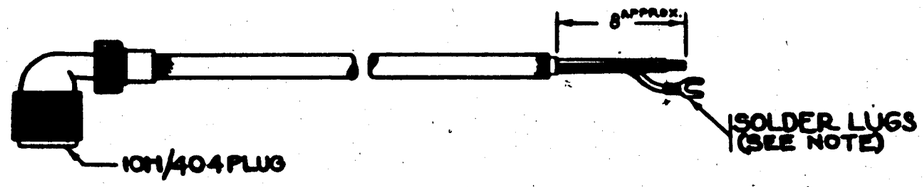

CABLE ASS'Y

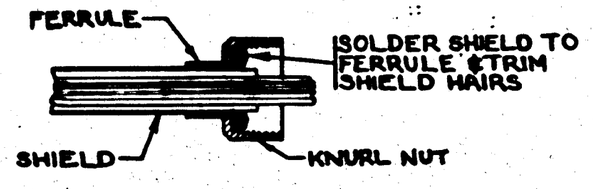

DETAIL OF ATTACHMENT OF CABLE SHIELD TO FERRULE

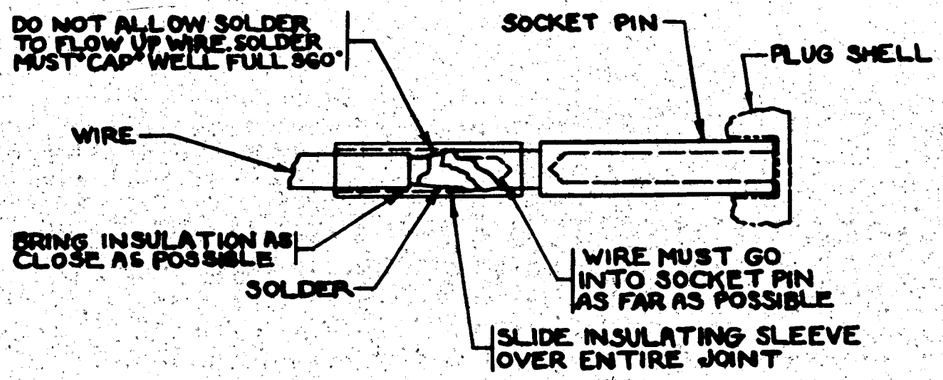

METHOD OF SOLDERING WIRE TO PIN

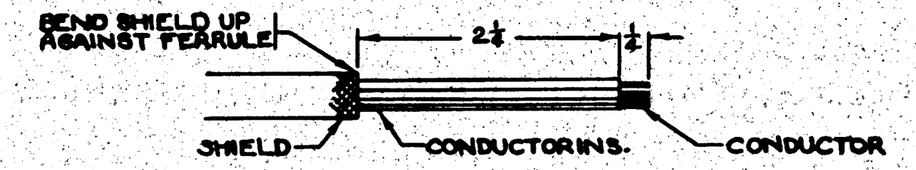

DETAIL OF CABLE END ATTACHING TO PLUG

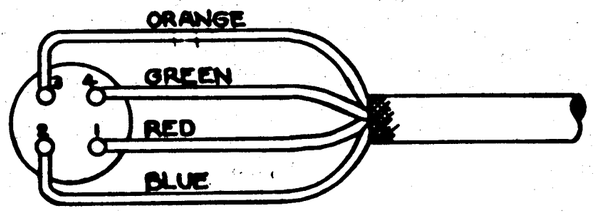

TYPICAL CONNECTION DETAIL OF CABLE TO PLUG

77713, 70496, 88476 (1-52) — P&Y-5A 28F6286 1
70496 91876 (1-89) — P&Y-5 28F6286 1
88476 (53 & ON) — P&Y-5A 28F5396 1

*GOV'T FURN. EQUIP.

NOTES:
WIRES MUST BE CAREFULLY PROTECTED FROM SHIELDING STRANDS TO PREVENT SHORTS.

1. CONTRACTOR INSTALLED ON CONTRACT 88476 (53 & ON) & 91876.

TYPE & SIZE OF LUGS TO BE DETERMINED ON FIRST INST.

ASSY. DASH No.	MODEL	NEXT ASSY.	REQ'D
REQUIREMENTS PER AIRPLANE			
REPLACES		.7# CALC. WT.	
REPLACED BY		ACT. WT.	
UNLESS OTHERWISE SPECIFIED DIMENSIONS ARE IN INCHES ± 1/32	SCALE		
STAMP PART NUMBER WHERE SHOWN			

PART No.	STOCK	MATERIAL	SPEC.	LH REQ. -0	RH REQ. -2	LH REQ. -3	RH REQ. -4	LH REQ. -5	RH REQ.
PARTS LIST PER ASSY.									
	VINYLITE SLEEVING SL-6 X 24			4					
#ION/404	PLUG			1					
#	CABLE - 4'3"		(DETAIL 2)	1					

A.C.			4-2-42	DRAFT	
NAVY	—	—		CHECK	
HEAT TREAT	FINISH			STRUCT	
				STAT	
				APPROV	
				ENG.	

NAME CABLE-FURN. - T3040 XMTR. TO CONTROL PANEL

OPP. HAND —

CONSOLIDATED AIRCRAFT CORP. San Diego, Calif.

SIZE D — 28F5397

R6

LET	ALTERATION	DATE	BY
A	REVISED R&B/AIRPL'N BL'K		
	NO WT CHG	7-[illegible]	[illegible]
B	ADDED TO ASM SL-6X2" (4)		
	28F5496 RESTRICTED TO		
	88476 (53401) 91876 (91401) ON	7-27-42	GARVIN
C	REMOVED CONTRACT NOTE 91876	7-31-42	[illegible]
	(DO & ON) FOR PBY-5, REMOVED	9-4-42	[illegible]
	REF DWG AS NEXT ASSY. FOR PBY-5	9-4-42	[illegible]
D	REMVD. NOTE: "TYPE I SIZE..."		
	INST. NOTES: "TE25 BURNDY		
	"BA14C-H4" WERE "SOLDER		
	LUGS (4) IN BIN -65-7 BA14C-H		
	LUGS ..... (4) WERE "LUGS		
	NOTED (4). NO WT. CHG.	11-20-42	NOE

E.O.A52118

E.O.A65915

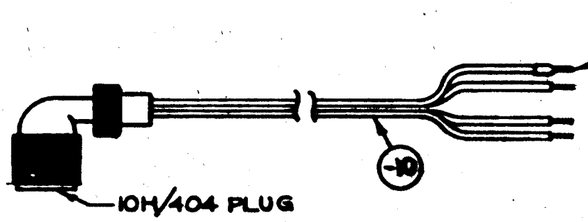

CABLE-R3039 RCVR. TO SPLICE BOX
-6 SUB-ASSEMBLY

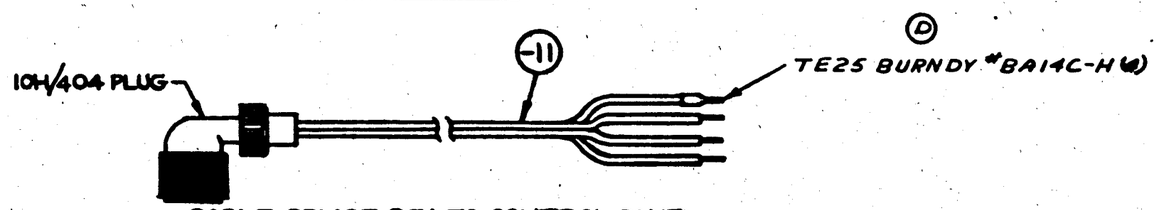

CABLE-SPLICE BOX TO CONTROL PANEL
-7 SUB-ASSEMBLY

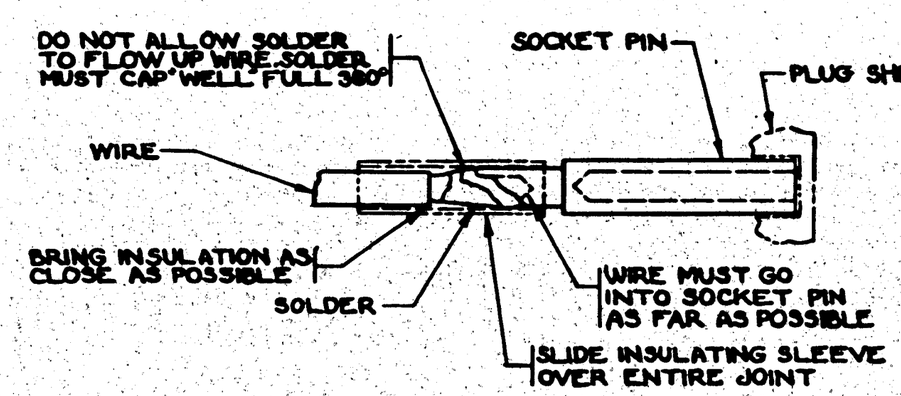

METHOD OF SOLDERING WIRE TO PIN

NOTE:
-11 CABLE CONSISTS OF (4) 6' LENGTHS OF #18 PACKARD FLAMEPROOF.
-10 CABLE CONSISTS OF (4) 5' LENGTHS OF #18 PACKARD FLAMEPROOF.

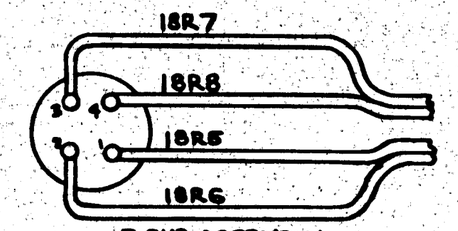

-7 SUB-ASSEMBLY
CONNECTION DETAIL-CABLE TO PLUG

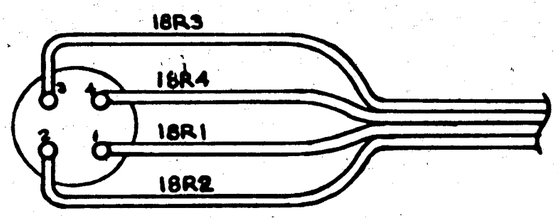

-6 SUB-ASSEMBLY
CONNECTION DETAIL-CABLE TO PLUG

77713, 70496 -7 PBY-5A 28F6285 1
88476(1-52) -6 PBY-5A 28F6285 1
70496, 91876(1-10) -7 PBY-5 28F6285 1
88476 (53401) -6 PBY-5 28F6285 1
-7 PBY-5A 28F5496 1
-6 PBY-5A 28F5496 1

ASSY. DASH NO.	MODEL	NEXT ASSY.	QTY.
	PBY-5	28F	

REQUIREMENTS PER AIRPLANE

REPLACES	.64# CALC WT.
REPLACED BY	ACT. WT.
LIMIT ON DIMENSIONS UNLESS OTHERWISE SPECIFIED	SCALE

STAMP PART NUMBER WHERE SHOWN

PART NO	STOCK	MATERIAL	SPEC.		LH REQ.	RH REQ.	LH REQ.	RH REQ.	LH REQ.	RH REQ.	LH REQ.	RH REQ.	LH REQ.	RH REQ.
PARTS LIST PER ASSY.					-0		-2		-3		-4		-5	
				VINOLITE SLEEVING SL-6X2"		4								
				#10H/404 PLUG				4						
				#BA14C-H LUGS TE25 BURNDY		4								
				-11 NOTED										
				-7 SUB-ASSEMBLY										
				#BA14C-H LUGS TE25 BURNDY				4						
				#10H/404 PLUG						4				
				-10 NOTED										
				VINOLITE SLEEVING SL-6X2"				4						
				-6 SUB ASS'Y										

NOTES
1. CONTRACTOR INSTALLED ON CONTRACT 88476(53401) & 91876.

GOV'T FURN. EQUIP.

A C									
NAVY									
HEAT TREAT	FINISH			DRAFT	CHECK	STRUCT	MAT	APPRO.	ENG.
				4-3-42	4-11-42			5-21-42	

NAME CABLE-FURN-R3039 RCVR. TO CONTROL PANEL

OPP. HAND

CONSOLIDATED AIRCRAFT CORP. SAN DIEGO, CALIF.

DWG. D

28F5398

LET	ALTERATION	DATE	BY
	E.O. A58994 (PR-24)		
A	FOR PBY-5B IN COLOR BLOCK		
	TERM. 5 CHGD FROM "WHITE" TO		
	BLACK. 10H258() WAS 10H256		
	(1). NO WT. CHG.	11-25-42	
	E.O. A63859 (PR-24)		
B	CREATED - 3 ASSY WITH -6 & -7		
	SUB-ASSYS. WT: -6 & 9.2 & -7		
	+1.25.	12-22-42	
	JAN		
C	REVISED - 3 ASSY. REPLACED -6 & -7		
	SUB-ASSYS WITH -6 & -7 ASSYS. NO		
	WT. CHG.	1-7-43	
	Grant		
D	ADDED - "DETAIL-JUNCTION BOX-"		
	S.L.P. 6508-6, AN3054-10, AN-		
	3053-10, CLI-182-25, AC660-30		
	WAS T & -25 WT. CHG. NIC	5-19-43	
	ADDED NOTES 2, 6, 7 & 8. REVISED NOTE		
	1 & 3. REMOVED RED & ADDED ORANGE		
	LARGE & SMALL TO COLOR CHART.	6-19-43	

* NAF 47844-1 (1) REF
PLUG SHIELD
(FOR -6 ± ASSY)

* NAF 47844-2 (1) REF
PLUG SHIELD
(FOR -7 ± ASSY)

Note: Not to scale

DETAIL A

AN3053-10
AN3054-10
LACE ON JIG

-7 (REF)

-6 (REF)

WHITE
BROWN-ORANGE
GREEN
RED
BLUE
BLACK (SMALL)
BLACK (LARGE)
WHITE
BROWN-ORANGE
GREEN
RED
BLUE
BLACK (SMALL)
BLACK (LARGE)

DETAIL-JUNCTION BOX END OF -6 & -7
NOT DRAWN TO SCALE

10H258 (1)
(-2 ASSY)

-7

-6

10H 256 (1) (-2 ASSY)

A

B

C

N.A.F. 68925-1
(-0 ASSY)

(SEE DET. A) - NAF 47844-1
NAF 68925-1
FOR -7 ASSY

N.A.F. 47024-802
(FOR -0 ASSY ONLY)

NAF 68925-2
(-0 ASSY)

(SEE DET. A) - NAF 47844-2
NAF 68925-2
(FOR -6 ± ASSY)

0508A-6
TINNERMAN CLAMP #8A
CLI-182-25

NOTES:
1. CUT CABLE TO PROPER LENGTH AND STRIP BACK 1½ IN OF THE OUTER INSULATION ON BOTH ENDS. (FOR -0 & -2 ASS'Y) (FOR -6 & -7 ASS'Y STRIP PLUG END ONLY)
2. UNBRAID CABLE SHIELD. TWIST 4 STRANDS OF SHIELDING TOGETHER GND. WIRE 1⅛" LONG. REMOVE REMAINDER OF SHIELDING FLUSH WITH OUTER INSULATION. FORM ¼" LOOP AT END OF GND. WIRE & SOLDER.
3. LAY CABLE ON PLUG AS SHOWN. CUT WIRES SO THEY REACH ⅝ PAST THEIR RESPECTIVE PINS AS SHOWN BY CHART. (CHART APPLIES TO BOTH ENDS OF CABLE FOR -0 & -2 ASS'Y), (APPLIES TO PLUG END OF CABLE FOR -6 & -7 ASS'YS).
4. TRIM WIRES SO THAT 5/16" OF EACH END IS BARE; TIN & SOLDER TO PINS IN EACH PLUG.
5. SEAL WITH CLEAR LACQUER & ATTACH COVER WITH SCREW PROVIDED.
6. AT LUG END STRIP OUTER INSULATION BACK 6½". REMOVE SHIELDING TO WITHIN ½" OUTER INSULATION - UNBRAID.
7. PLACE WIRES ON JIG & LACE.
8. FASTEN KNURL NUT & FERRULE TO CABLE FOR SHIP INSTALLATION.

TERM.	PBYF & 5A WIRE	PBY-5B WIRE
1	WHITE/BROWN	RED
2	ORANGE	
3	GREEN	GREEN
4	RED	YELLOW
5	BLUE	BLACK
6	LARGE & SMALL	
7	BLACK	BLUE

ASSY	LENGTH OF CABLE A	B	C
-0			41
-2			41
-6		32'6"	
-7	7'8"		

ASSY DASH NO.	MODEL	NEXT ASSY.	REQ.
-7	PBY-5A	28F6955	1
-6	PBY-5A	28F6955	1
-7	PBY-5	28F6955	1
-6	PBY-5	28F6955	1
-2	PBY-5B	28F5404	1
-0	PBY5	28F5401	1
-0	PBY5A	28F5402	1

NO. (S) 464 (MARK) C-91876 (-90 FOR)
#91876 (1-90)
#88476 (1-52)

REQUIREMENTS PER AIRPLANE

REPLACES — Ass'y. Wt.

REPLACED BY — Ass'y. Wt.

UNLESS OTHERWISE SPECIFIED DIMENSIONS ARE IN INCHES ± 1/32 — SCALE 12" = 1'0"

STAMP PART NUMBER WHERE SHOWN

PART NO.	STOCK	MATERIAL	SPEC.	LH REQ. -0	RH REQ. -0	LH REQ. -2	RH REQ. -2	LH REQ. -6	RH REQ. -6	LH REQ. -7	RH REQ. -7	LH REQ. -8	RH REQ. -8
PARTS LIST PER ASSY.													
#NAF 68925-1												1	
#NAF 47844-1 SHIELD												1	
#NAF 47024-802 X 35 CABLE												1	
0508A-6								1		1			
SLEEVING VINOLITE								7		7			
AC660-30								7		7			
#NAF 68925-2								1				1	
#NAF 47844-2 SHIELD								1				1	
#NAF 47024-802 X 35 CABLE								1				1	
AN3054-10								1				1	
AN3053-10								1				1	
CLI-182-25								1				1	
#NAF 47844-2				1									
#NAF 47844-1				1									
QUINTOFORCE (RED RUBBER COVERED) X 41" (MARK)				1		1							
#PLUG 10H256				1									
#PLUG 10H258					1								
#N.A.F. 68925-1 PLUG				1									
#N.A.F. 68925-2 PLUG					1								
#N.A.F. 47024-802 X 41 CABLE				1									

* GOV'T FURNISHED

NOTE:
1. CONTRACTOR INSTALLED ON CONTRACT 88476 (53 & ON) #91876 (91 & ON). 2. ON CONTRACT 88476 (1 TO 52) & 91876 (1 TO 90) PARTS ARE TO BE FURNISHED NAVY FOR SERVICE INST

AC —
NAVY —
HEAT TREAT — FINISH

DRAFT: 3-3-42 — CHECK — STRUCT — MAT — APPROV — ENG.

NAME ASS'Y - CABLE - RCVR. TO CONTROL PANEL - R3003 (IFF)

OPP. HAND

CONSOLIDATED AIRCRAFT CORP. SAN DIEGO, CALIF.

SIZE D — 28F5404

28F5404

LET	ALTERATION	DATE	BY
	RELEASED		
A	ADDED NAF47844-3 (2) (FOR PBY-5A *53 ℄ ON) -0 ASSY (DELETE -1 ASSY)		
	*NAF68925-3(2) (-0 ASSY) & *NAF68925-3(1) (-7 SUB ASSY)	2-8-43	
B	RELEASED MAR 12-43		
	IN COLOR CODE BLOCK, WHERE FOR PBY-5A, BLUE WAS RED, RED WAS GREEN, GREEN WAS YELLOW, YELLOW WAS WHITE & WHITE WAS BLUE NO WT. CHG.	1-11-43	
C	RELEASED MAR 12-43		
	CREATED -5 ASSY, WT. OF -6 SUB-ASSY 5.69# & -7 SUB ASSY. 1.22#	1-11-43	
D	-6 & -7 ASSYS WERE -5 ASSY NO WT. CHG.	1-11-43	
E	ON FACE OF DWG. ADDED LACING DETAIL & REVISED NOTES AS FOLLOWS: "BLUE" IN NOTE 1 WAS "BRAID", ADDED NOTES 2, 6, 7 & 8. ON DWG. NAF47024-604 X 33" WAS 40" &, CACTES-80 WAS TERZ BURNDY YAVBC-LI. ON FACE OF DWG. & IN BOM, ADDED ARBORA-8, ARBORA-6, CACTES-80 BURNDY YAVBC-LI, ASSY-6, TINNERMAN CLAMP CLI-182-25, SLS VINOLITE, WT. CHG. + .074 FOR -6 & -7.	2-5-43	WLMA

Ⓐ

*NAF47844-3 (2) (FOR PBY-5A *53 ℄ ON)

*NAF.68925-3(2) (-0 ASSY)

10H/254 (2) (-2 ASSY)

QUINTO SHEATH (SMALL) (-2 ASS'Y)

Ⓓ *N.A.F.47024-604 (-0, -6 & -7 ASSY)

AN3053-8
AN3054-8
LACE ON JIG

Ⓐ FOR *NAF47844-3 (REF.) SEE DETAIL A

Ⓒ *NAF47844-3(1)
Ⓓ *NAF68925-3(1)
(-7 SUB ASSY)

Ⓒ *NAF47844-3(1)
*NAF68925-3(1)
(-6 SUB ASSY) Ⓓ

A

B

C.A.C.TE5-80 BURNDY YAVBC-LI
SL5 VINOLITE

C

Ⓒ

Q508A-6
TINNERMAN CLAMP *8A
CLI-182-25
Ⓔ

Ⓑ

TERM.	PBY-5 & 5A WIRE	PBY-5B WIRE
1	WHITE	BLUE
2	BLACK	RED
3	BLUE	GREEN
4	GREEN	YELLOW
5	BROWN	WHITE

ASSY	LENGTH OF WIRE A	B	C
-0			40"
-2			40"
-6		32"-5"	
-7	7'-8"		

Ⓒ Ⓓ

*NAF47844-3(REF.)
PLUG SHIELD

DETAIL A Ⓓ
FOR -6 & -7 ASS'YS ALL
Ⓐ & -0 ASS'Y FOR PBY-5A *53 ℄ ON -88476

CABLE ASSEMBLY

1. CUT CABLE TO PROPER LENGTH AND STRIP BACK 1 1/2 IN. OF THE OUTER INSULATION FROM PLUG END.
2. UNBRAID CABLE SHIELD. TWIST 4 STRANDS OF SHIELDING TOGETHER TO FORM GND. WIRE 1 1/8 IN. LONG. REMOVE REMAINDER OF SHIELDING FLUSH WITH OUTER INSULATION. FORM 1/4 IN. LOOP AT END OF GND. WIRE & SOLDER. Ⓔ
3. LAY CABLE ON PLUG AS SHOWN. CUT WIRES SO THEY REACH 3/8 IN. PAST THEIR RESPECTIVE PINS AS SHOWN BY CHART. (CHART APPLIES TO BOTH ENDS OF CABLE.)
4. TRIM WIRES SO THAT 3/16 IN. OF EACH END IS BARE; TIN AND SOLDER TO PINS IN EACH PLUG.
5. SEAL WITH CLEAR LACQUER AND ATTACH COVER WITH SCREW PROVIDED.
6. AT LUG END STRIP OUTER INSULATION BACK 6 1/2 IN. REMOVE SHIELDING TO WITHIN 1/2 IN. OF OUTER INSULATION - UNBRAID.
7. PLACE WIRES ON JIG & LACE.
8. FASTEN NUT & FERRULE TO CABLE FOR SHIP INSTALLATION.

* GOV'T FURNISHED

CONTRACT # 91876(1-30) 88476

NOTE:
1. CONTRACTOR INSTALLED ON CONTRACT 88476 (53 ℄ ON) & # 91876 (31 ℄ ON)
2. ON CONTRACT 91876 (1-30) & 88476 (1-32) PARTS TO BE FURNISHED TO NAVY FOR SERVICE INST'LN.

ASSY. DASH NO.	MODEL	NEXT ASSY.	REQ.
-7	PBY5A	28F6985	1
-6	PBY5A	28F6955	1
-7	PBY5	28F6965	1
-6	PBY5	28F6950	1
-2	PBY-5B	28F7316	1
-0	PBY 5	28F5387	1
-0	PBY 5A	28F5387	1

REQUIREMENTS PER AIRPLANE

REPLACES

REPLACED BY

ASST. QTY.

LIST OF STANDARDS UNLESS OTHERWISE SPECIFIED: ± 1/32

SCALE: 12" = 1'0"

STAMP PART NUMBER WHERE SHOWN

PART No.	STOCK	MATERIAL	SPEC.	LH REQ.	RH REQ.	LH REQ.	RH REQ.	LH REQ.	RH REQ.	LH REQ.	RH REQ.	LH REQ.	RH REQ.
	CLI-182-25	TINNERMAN CLAMP						1	1				
	AN3054-8							1	1				
	NAF47024-604 X 7'8"	CABLE								1	1		
	AN3054-8							1	1				
	Q508A-6							1	1				
	NAF68925-3							1	1				
	NAF47024-604 X 33"	CABLE						1	-				
	VINOLITE SLEEVING	SL5 X 5/8						5"	5"				
	NAF47844-3	SHIELD						1	1				
	CACTES-80	BURNDY YAVBC-LI						5"	5"				
	NAF47844-3	SHIELD (FOR PBY-5A *53 ℄ ON ONLY)		2									
	QUINTO SHEATH (SMALL)	40" (CA101)				1							
	10H/254					2							
	NAF68925-3			2									
	NAF47024-604 X 40"	CABLE		1									

PARTS LIST PER ASSY.

				-0		-2		-6		-7		-5			

A C			DRAWING VIEW	SCREW			LCH
NAVY		3342	4-11-43		MEC		WOLD
HEAT TREAT	FINISH	DRAFT	CHECK	STRUCT	MAT	APP. BY	ENG.

NAME ASSY-CABLE-RCVR. TO CONTROL UNIT - R3003 (IFF)

OPP. HAND NONE

CONSOLIDATED AIRCRAFT CORP. San Diego, Calif.

SIZE D — 28F5406

R 90616

LET	ALTERATION	DATE	BY
A	REDRAWN - REPLACED # NAF47844-1 PLUG WITH # NAF47844-1 ASSY. CONSISTING OF # NAF47844-1 SHIELD, SOLDER SLEEVE & CABLE CLAMP ASSEMBLY WITH 2 CONTACTS AND 1 CONTACT FOR #3 & #5 CABLE WIRES, ONE WIRE & SHIELD. ADDED NOTE 5. ADDED DET. SHOWING NAF 47844-1 SHIELD ASSY. ADDED "# NAF 47908-1 (1) PLUG" 47844-1 (1) & CAC # SL-26	5-27-42	R.S.
B	REMOVED FROM FACE OF DRWG. NOTE NO. 2 "ON CONTRACT 91876 (-2 & -5) & 88476 (-0 & -2) PARTS TO BE FURNISHED TO NAVY FOR SERVICE INST'L'N. RESTRICTED CONT. 91876 TO SHIPS (1 TO 82) 88476 TO SHIPS (1 TO 82)		
C	CREATED "ASSY. WT. 1.33#"	11-43	SHIKADA
D	ADDED:- 6 FOR-2 ASSY. ADDED DIM'S 2¾ & 1½ APPROX & NOTE "SOLDER ---SHIELD" TO BE (2) WAS (3) FOR -2 ASSY. WT CHG NEG.	2-2-43	
E	REMOVED 1/16, 1/4 DIMS & CAC SLEEVING LITE. ADDED 4, 3 DIMS & NOTE 5 REVISED CABLE PREPARATION DETAIL. NAF47024-302 X 17'6" WAS 17' WT. CHG NEG.	6-21-43	

MCR-36 E.O. A88771
E.O. # A98269

DETAIL OF SHIELD * NAF47844-1(1)

SEE NOTE #1. BLACK

Ⓔ

3/16 3/4 7/8 1/4

CABLE PREPERATION DIMS.

Ⓔ Ⓒ 1/4 APPROX Ⓓ

TE 25 BURNDY (3) SL34 BURNDY SLEEVE(3)

SOLDER -6 (REF) TO SHIELD.

1/4 2½ 3½

-6 (FOR-2 ASSY)

Ⓓ

* NAF 47024-302
(15' FOR -0 ASSY.)
(17' FOR -2 ASSY.)

Ⓔ

Ⓓ

TE 25 (BURNDY) (FOR-2 ASSY)
SL34 BURNDY SLEEVE (1)

Ⓔ

Ⓔ A A

* NAF 47908-1 (1)

SECTION A-A

BLACK

PIN NO.	WIRE COLOR
1	RED
2	WHITE
3	WHITE
4	BLACK
5	RED

C. NO. 2464
C91876 - #0400
CONTRACT # 91876 (TO 82)
C.88476 →

NOTES:-

1. TO OBTAIN GND. WIRE CUT OUTER INSULATION FROM CABLE PER DIMS. UNBRAID SHIELDING, & TWIST 4 STRANDS TOGETHER TO FORM WIRE 1⅛ LONG. FORM ¼ LOOP AT GND. END & SOLDER. REMOVE REMAINING SHIELDING FLUSH WITH OUTER INSULATION.
2. CONTRACTOR INSTALLED ON C.#88476 (53 & ON) & C. 91876 (90 & ON)

Ⓔ

* GOV'T FURN. EQUIP.

PART No.	STOCK	MATERIAL	SPEC.	LH REQ.	RH REQ.	LH REQ.	RH REQ.	LH REQ.	RH REQ.	LH REQ.	RH REQ.	LH REQ.	RH REQ.
PARTS LIST PER ASSY.				-0	-2	-3	-4	-5					
-2	PBY-5A	28F6955	1										
-2	PBY-5	28F6955	1										
-0	PBY-5	28F5307	1										
-0	PBY-5A	28F5307	1										
ASSY. DASH NO.	MODEL	NEXT ASSY.	QTY.										
REQUIREMENTS PER AIRPLANE													
REPLACED 28F5307 3/5/42		1.33 CALC. WT.											
REPLACED BY		ADV. WT.											
SCALE 24" - 1'-0"													
STAMP PART NUMBER WHERE SHOWN													
	-6 WIRE	X 4½	AN-IC4 B	B	1								
	TE 25 BURNDY BAND-H			B	4								
	SL 34 BURNDY SLEEVE			B	4								
	# NAF 47908-1 PLUG			1	1								
	# N.A.F. 47844-1 SHIELD			1	1								
	* N.A.F. 47024-302 X 17'6" CABLE			-	1								
	# N.A.F. 47024-302 X 15' CABLE			1	-								

AC		SMITH	GRACIE SIMS	GREER		ROWE	ICH
NAVY —	—	8-29-42			CUSTER	8-1-42	WOLD
HEAT TREAT	FINISH	DRAFT	CHECK	STRUCT	MAT	APPR	ENG

NAME ASSY-CABLE-CONTROL UNIT TO SWITCH-R3003 (1FF)

OPP. HAND NONE

CONSOLIDATED AIRCRAFT CORP. San Diego, Calif.

DWG. D SIZE 28F5407

R 5/8

E.O.#A31544 G

E.O. A35755

LET	ALTERATION	DATE	BY
A	ON FACE OF DWG. DIM 6½ APPROX. WAS 6½, 1½ APPROX. WAS 1½ & 2 APPROX. WAS 2. ADDED NOTE "LOCATE ---CABLES" (NO WT. CHG.)	5/8/42	WALTHER
B	3" DIM. WAS 1⅛, 4⅝ DIM. WAS 7¾, REMOVED 3/8 DIM. ADDED AN340D8, WT. CHG. NEG.	6/8/42	LEWIS

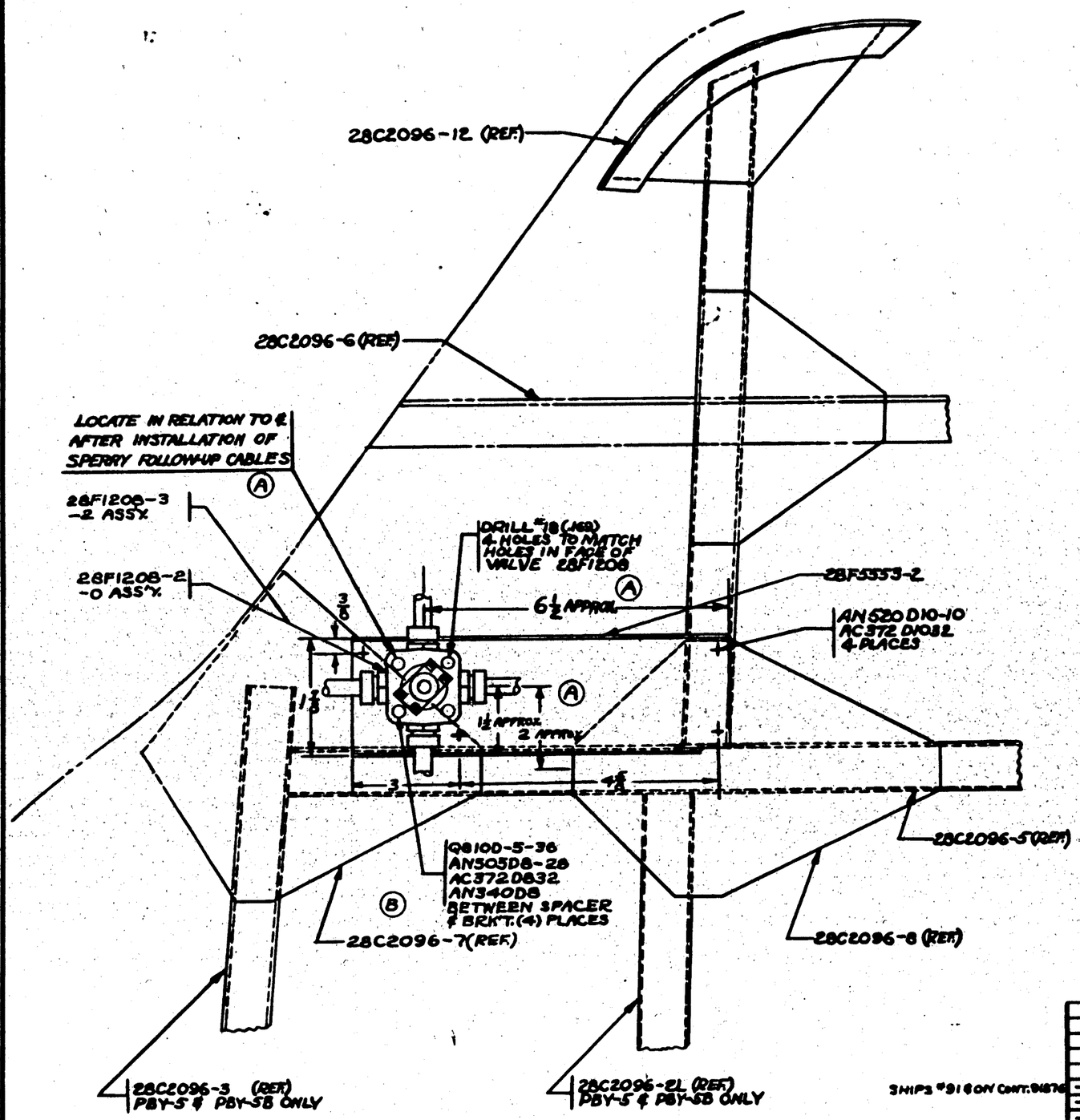

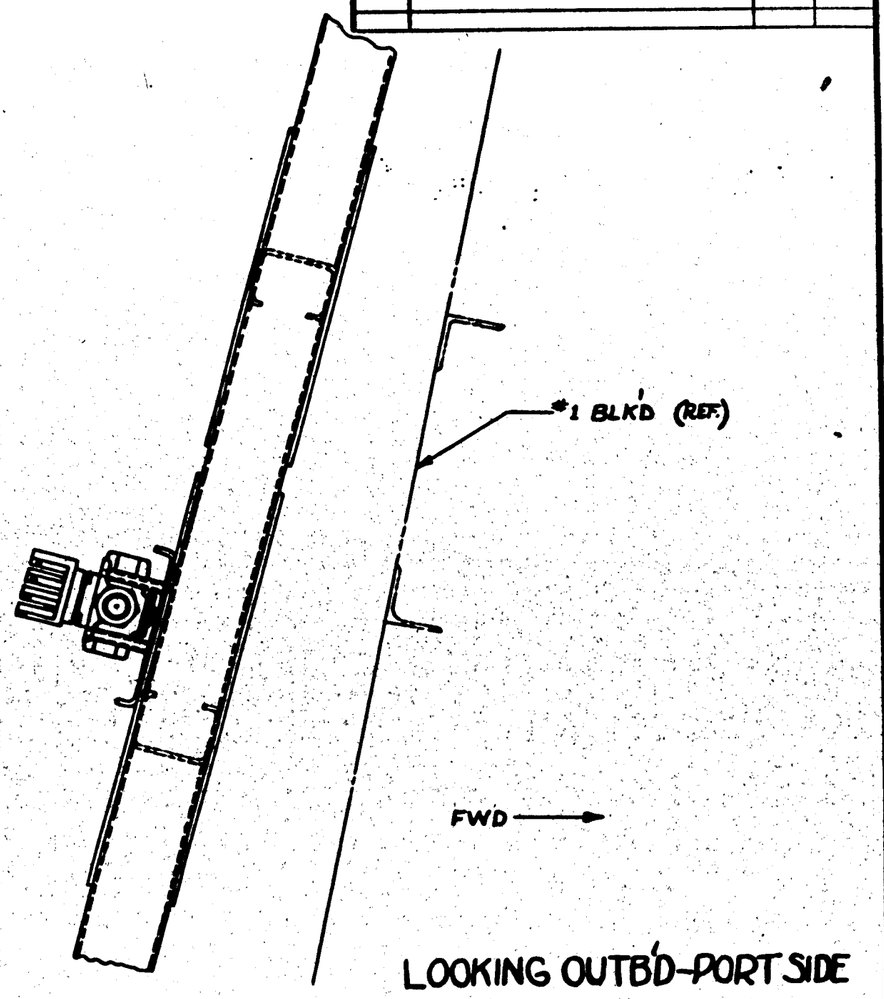

LOOKING OUTB'D-PORT SIDE

SHIPS #91 & ON CONT. 91676

CONT. 88476
SHIPS #1-90 CONT. 91676

AFT #1 BULKHEAD PORT SIDE LOOKING FWD.

| | | |

LET	ALTERATION	DATE	BY

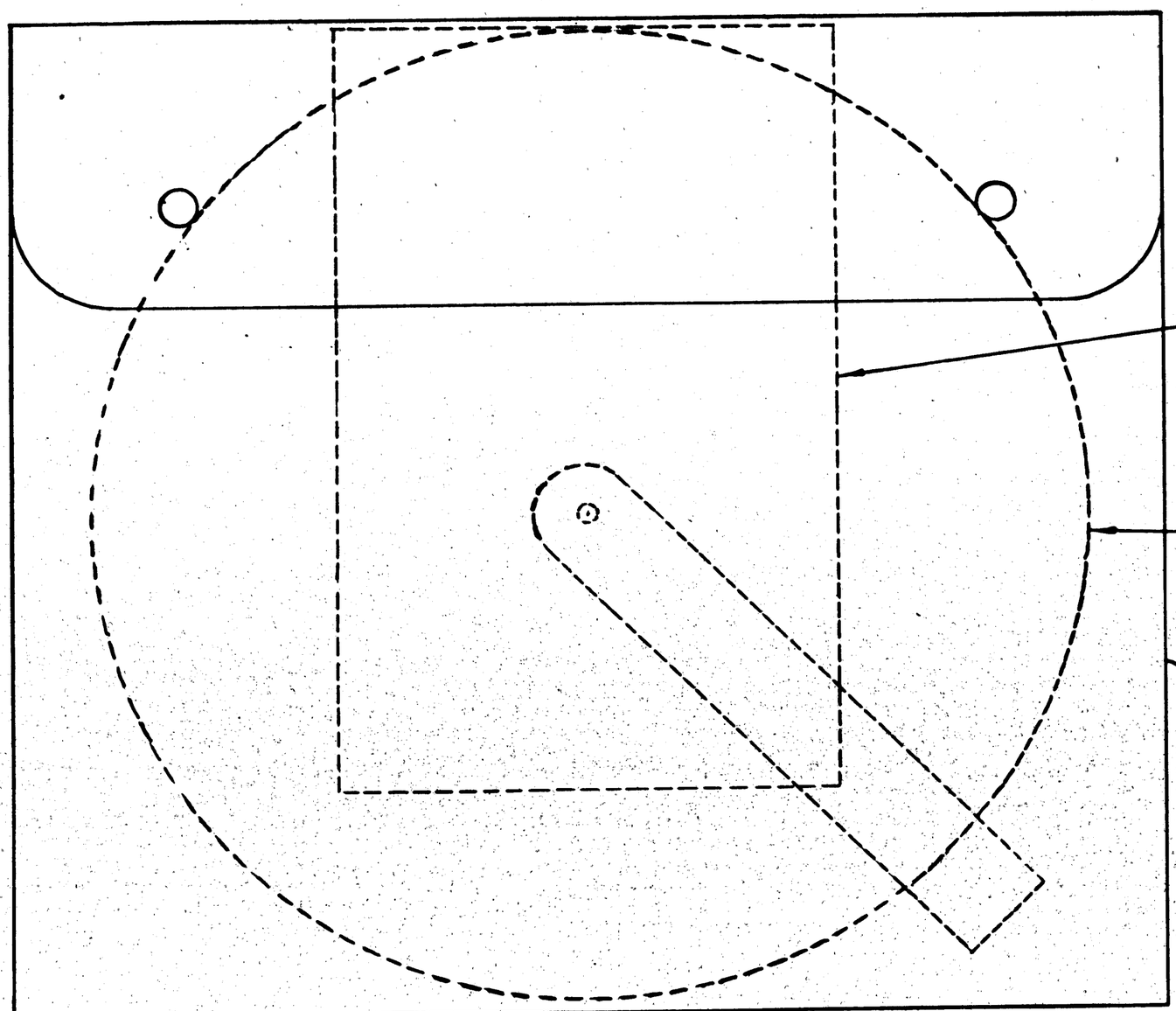

REPORT #ZI-28-094 (-0 ASSEM. ONLY)
REPORT #ZI-28-095 (-2 ASSEM. ONLY)
REPORT #ZI-28-096 (-3 ASSEM. ONLY)
REPORT #ZI-28-097 (-4 ASSEM. ONLY)
ZI-28-098 (-5 ASSEM. ONLY)

28F5416

28F5437

PURCHASE TO DWG

CONT. 70496 — -5 PBY-5A 28F6002
CONT. #31876 — - PBY-5 28F1002
CONT. #88476 — -3 PBY-5A 28F6002
CONT. #77113 — -2 PBY-5A/5B 28F6002
CONT. #70496 — -0 PBY-5 28F1002

ASSY. DASH NO.	MODEL	NEXT ASSY	REQ.
REQUIREMENTS PER AIRPLANE			
REPLACES			GALC. WT.
REPLACED BY			ACT. WT.
SCALE 12" = 1'-0"			

STAMP PART NUMBER WHERE SHOWN

PART No.	STOCK	MATERIAL	SPEC.	LTR DASH	LTR DASH	LTR DASH	LTR DASH	LTR DASH
				-0	-2	-3	-4	-5
ZI-28-098								A
ZI-28-097								A
ZI-28-096								A
ZI-28-095								A
ZI-28-094				A	A	A	A	A
28F5437				A	A	A	A	A
28F5416				A	A	A	A	A

PARTS LIST PER ASSY.

AC			DRAWN	SBA			Phase	Phase
NAVY NONE	NONE		9-15-41	A M C		MSB		Weld
HEAT TREAT	FINISH		DRAFT	CHECK	STRUCT	ENG	SPEC	ENG

NAME BAL-O-DIAL KIT

OPP HAND

CONSOLIDATED AIRCRAFT CORP. of SAN DIEGO, CALIF

SIZE D — 28F5415

R

LET	ALTERATION	DATE	BY
A	IN P/M REPLACED FOR -7 "K13624 x 5/8, AL. ALLOY EXT. 46A9-T" WITH "Y-2-A20T x 3/4" BRD'T REQ/AIR. TO DATE. WT. CHG. NEG.	8-20-42	[illegible]

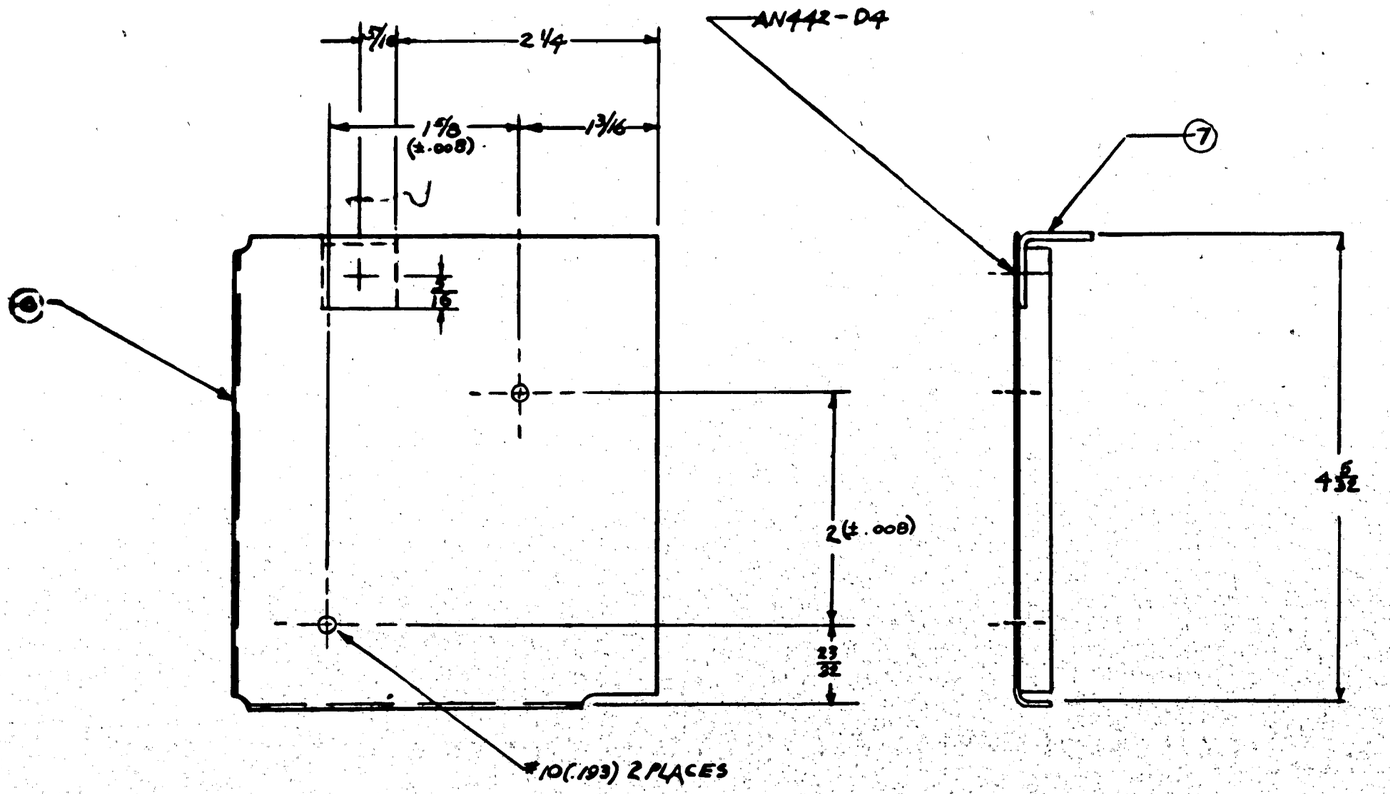

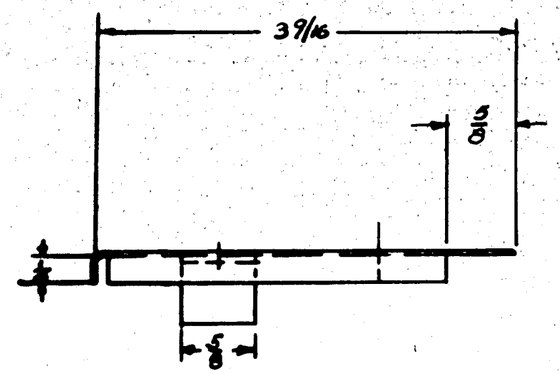

FINISH
Z-ANODIC TREATMENT
P-P-27 PRIMER
GP- GREEN PRIME

C.- 8847 (53 ON) ONLY

ASSY. DASH NO.	MODEL	NEXT ASSY.	REQ.
	PBY-5A	28F5102	1

AN442AD4

REQUIREMENTS PER AIRPLANE

REPLACES — .072 CALC WT.

REPLACED BY — ACT. WT.

LIGHT GA. DIMENSIONS UNLESS OTHERWISE SPECIFIED ± 1/32 — SCALE 12" = 1'0"

STAMP PART NUMBER WHERE SHOWN

PART NO	STOCK	MATERIAL	SPEC.	LH REQ. -0	RH REQ. -0	LH REQ. -2	RH REQ. -2	LH REQ. -3	RH REQ. -3	LH REQ. -4	RH REQ. -4	LH REQ. -5	RH REQ. -5
-7	Y-2-A20T x 3/4			1									
-6	.040 X 4 1/2 X 4	24ST ALC.	47A9-T		1								

PARTS LIST PER ASSY.

A C
NAVY NONE — HEAT TREAT
Z-P-GP — FINISH

BRIS 9-9-42 — DRAFT

CHECK | STRUCT. | MAT | APPROV. | ENG.

NAME BRACKET-FURNS.-ZB PILOTS CONTROL BOX MTG.

OPP HAND NONE

CONSOLIDATED AIRCRAFT CORP. WF SAN DIEGO, CALIF

DWG SIZE D — 28F5426

R 9-17-42

LET	ALTERATION	DATE	BY
A	CREATED -6 & -7 PART & RELOCATED HOLES ON FACE OF Q'NTD		
B	ADDED -8 #40(2) HOLES (LOC'S DIMS. & NOTE #2. NEG. W/C 41-8 PROC		
C	IN REQ/AIRP. BLK: -8 FOR PBY-5 (PBY-5A - NA 28F5432) - (QUANT 2 WAS 1) NO WT. CHG	17-43	GRIMM
D	RELOCATED #40(.098) 2 HOLES 1 DIM. WAS 7/8, NO WT. CHG.	2-3-43	

E.O. A94582

OTC

#18 (.169) 2 PLACES FOR -6 & -7

3/8

3/8

3/16

3/16

HOLE (1) FOR -6 ONLY

-8 (COVER)

#40(.098) 2 HOLES

3/8(.375) 2 PLACES FOR -6 & -7

HOLE (1) FOR -7 ONLY

1/4 (REF)

1/4

7/8

9/16

2 1/4

4/16

1

1/4

7/8

9/16

FINISH CODE	
Z	ANODIC TREATMENT
P	P-27 PRIMER
AP	ALUMINIZED PRIMER
C	CADMIUM PLATE

GP-GREEN PRIMER

NOTE: #1. BOX MAY BE PURCHASED FROM:
POULSEN & NARDON, LOS ANGELES { #1035-35D COVER, #1035-208N BOX
(OR)
MONARCH TOOL & INST. SAN DIEGO { #MT-C5D 1002 COVER, #MT-1002R-208 BOX
#2. KEEP COVER ATTACHED TO BOX.

-8	PBY-5A	28F5432	2
-8	PBY-5	28F5432	2
-6	PBY-5	28F5432	1
-7	PBY-5	28F5432	1
-7	PBY-5A	28F5432A	1
-6	PBY-5A	28F5432	1

ASSY. DASH NO. | MODEL | NEXT ASSY. | NOMEN.

REQUIREMENTS PER AIRPLANE

REPLACES — A6 CALC. WT.

REPLACED BY — ADV. WT.

UNLESS OTHERWISE SPECIFIED DIMENSIONS ± 1/32 — SCALE 12" = 1'0"

STAMP PART NUMBER WHERE SHOWN

PART No.	STOCK	MATERIAL	SPEC.	LH REQ.	RH REQ.	LH REQ.	RH REQ.	LH REQ.	RH REQ.	LH REQ.	RH REQ.	LH REQ.	RH REQ.
				-0		-2		-3		-4		-5	
(A)	-7 MFR. FROM CAC BOX #13												
	-8 CAC BOX #18												
	-6 CAC BOX #13												

PARTS LIST PER ASSY.

AC		DWG.		GREEN		GREEN	JEST
NAVY NONE	P-GP	4-7-42	C.R.			8-1-43	WELD
HEAT TREAT	FINISH	DRAFT	CHECK	STRUCT	MAT	APPROV	ENG.

NAME BOX-FURN & WAISTGUN'R. INTERPHONE-EXTENSION

CONSOLIDATED AIRCRAFT CORP. SAN DIEGO, CALIF.

OPP. HAND NONE

DWG. SIZE D

28F5431

LET	ALTERATION	DATE	BY
A	CREATED -6 & -7 ASS'YS & CHANGED LOCATION OF PARTS ON FACE. Changed Wiring Connection JACK SPECIFICATIONS		
B	ON FACE OF DWG. & B/M JA-4-20 WAS JA-15 & JA-4-15 WAS JA-20 NO WT. CHG.		

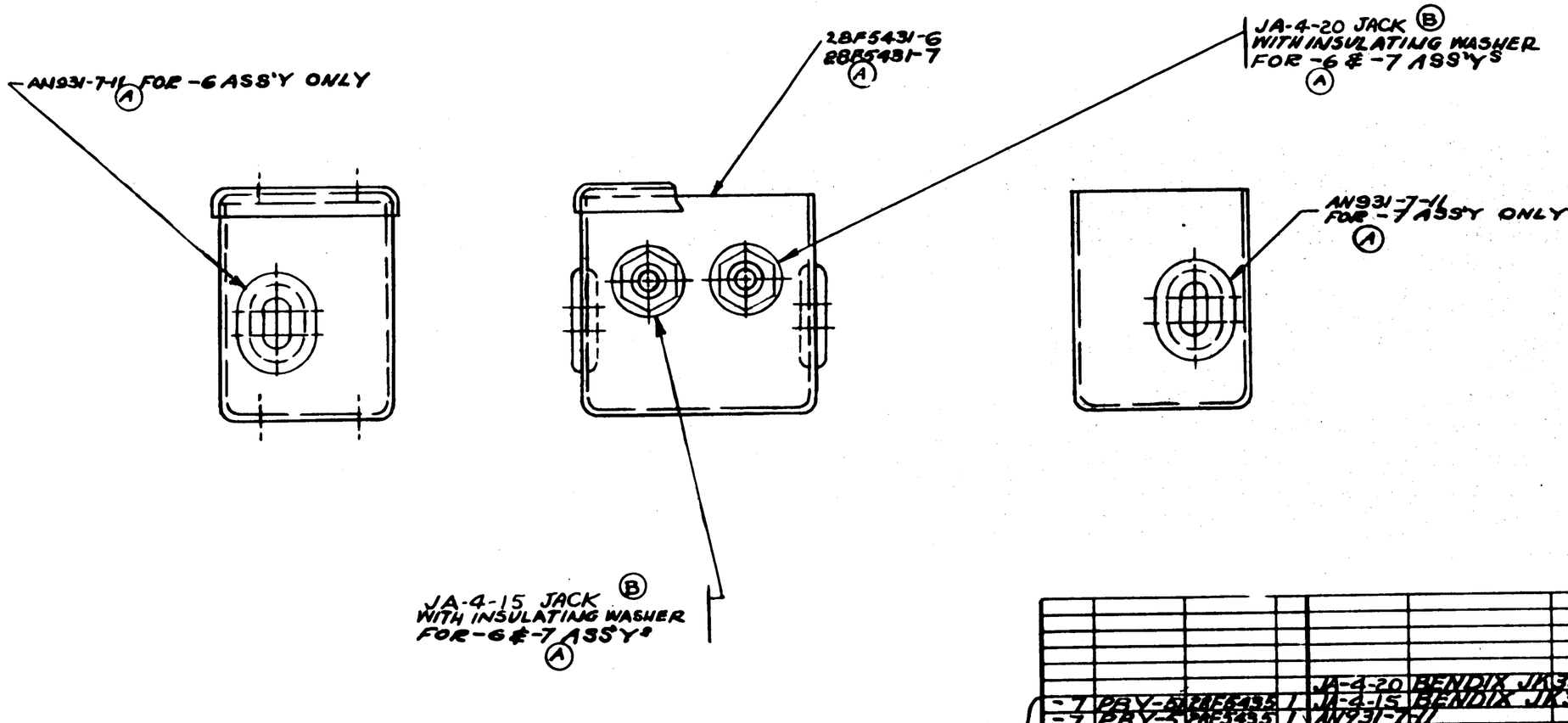

NOTE:
BENDIX - JK33-A OR EQUIV. - TEL JACK
BENDIX - JK34-A OR EQUIV. - MIC. JACK
(A)

ASSY. DASH No.	MODEL	NEXT ASSY.	QUAN.
-7	PBY-5A	28F5435	1
-7	PBY-5	28F5435	1
-6	PBY-5A	28F5435	1
-6	PBY-5	28F5435	1

REQUIREMENTS PER AIRPLANE
REPLACES
REPLACED BY
.86 Calc. WT.
ASY. WT.
SCALE 12"=1'0"
1/32
STAMP PART NUMBER WHERE SHOWN

ALL

PART No.	STOCK	MATERIAL	SPEC.	LH REQ. -0	RH REQ. -0	LH REQ. -2	RH REQ. -2	LH REQ. -3	RH REQ. -3	LH REQ. -4	RH REQ. -4	LH REQ. -5	RH REQ. -5
JA-4-20	BENDIX JK33-A TEL. JACK			1		1		1		1		1	
JA-4-15	BENDIX JK34-A MIC. JACK				1		1		1		1		1
AN931-7-11				1	1	1	1	1	1	1	1	1	1
28F5431-6				1									
-6 ASSY				1									
28F5431-7					1								
-7 ASSY					1								
JA-15	BENDIX JK33-A TEL. JACK				1		1		1		1		1
JA-20	BENDIX JK34-A MIC. JACK			1		1		1		1		1	
AN931-7-11					1		1		1		1		1
28F5431-5				1	1	1	1	1	1	1	1	1	1
-5 ASSY				1	1	1	1	1	1	1	1	1	1

PARTS LIST PER ASSY.

A.C.			BARS										
NAVY NONE	P-6P												
HEAT TREAT	FINISH		DRAFT	CHECK	STRUCT	STAT	APPROV	ENG.					

NAME BOX-ASSEM-FURNS-WAIST-GUN'R INTERPHONE EXT.
OPP. HAND NONE
SIZE D
28F5432
CONSOLIDATED AIRCRAFT CORP. SAN DIEGO, CALIF.

R 8-7-42

LET	ALTERATION	DATE	BY
	E.O. #A48675 E.O. AC61524		
A	CREATED - 2 ASS'Y: AIR NAT. CAM.	6-2-42	
B	CREATED - 3 ASS'Y. AIRCRAFT ACC. AIRPLANE - 3 ASS'Y. AIR NAT. CAM.		
	PBZ-3 PBZY-3 MOUNT CAM.		
C	RELAY'D. AC224-1(2) AC224-2(2) ADDED 1/8 SNAP FAST. (2) TO -3		
	FOR -2 ASS'Y. AIR NAT. CAM.		
	E.O. #A93326 M.C.R. 8504 REVISED REF. AIRPLANE BLK.		
D	ADDED CUTOUT. MTG. NAT. CHG.	2-2-43	

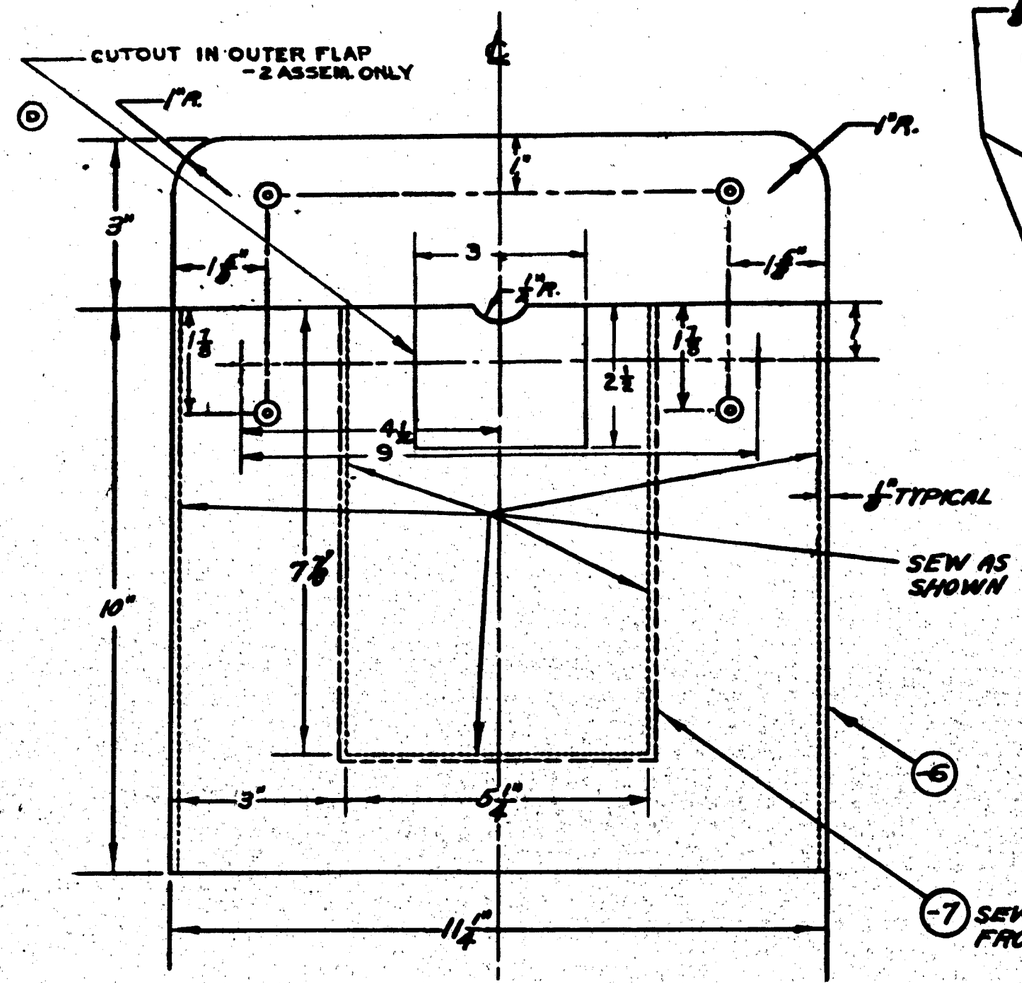

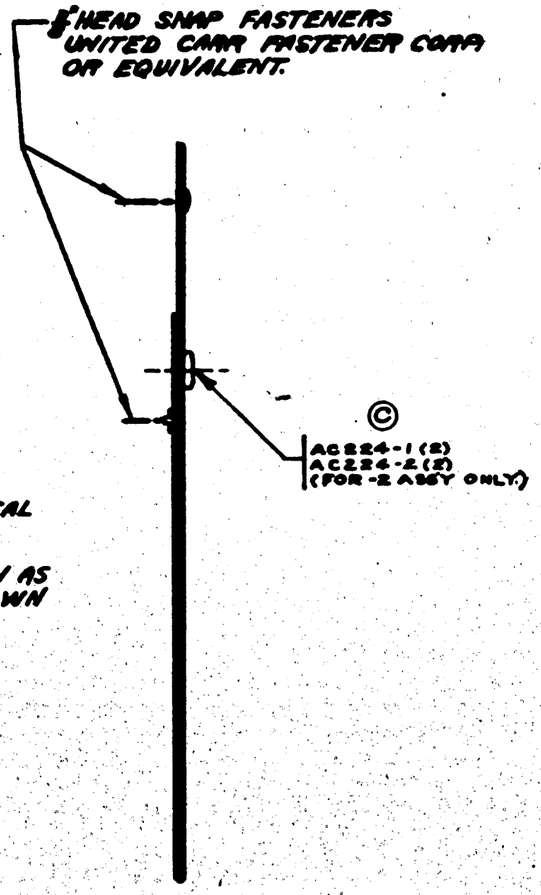

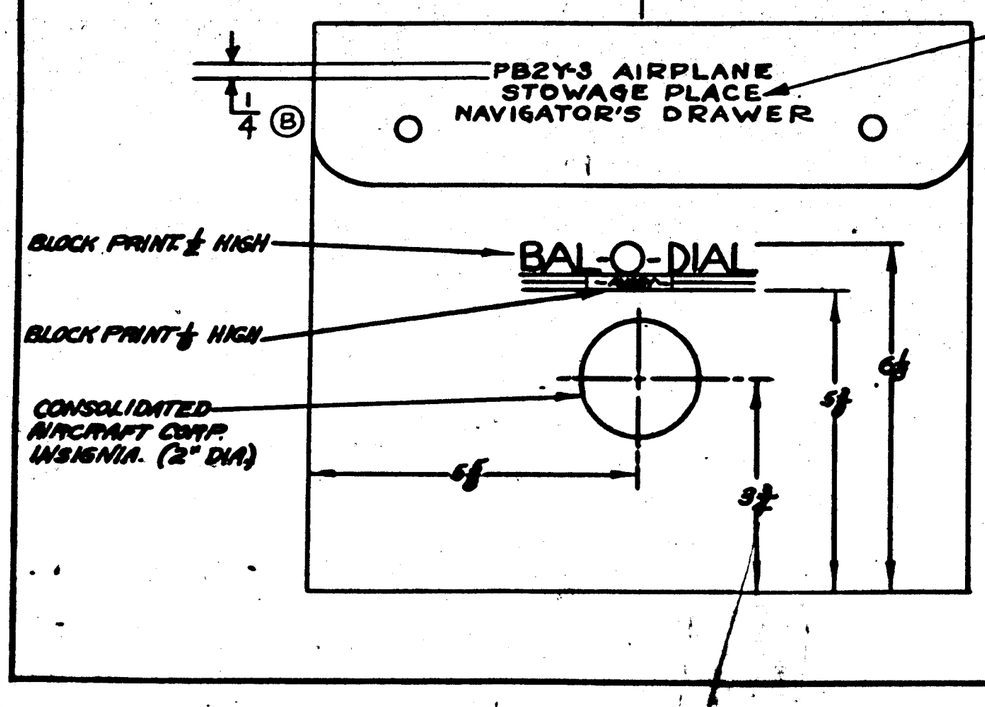

NOTE: LETTERING TO BE DONE IN GOLD LEAF.

PURCHASE TO DWG.
FURNISHED WITH PURCHASED PART 28F5415

PART No.	STOCK	MATERIAL	SPEC.	-0 REQ.	-2 REQ.	-3 REQ.	-4 REQ.	-5 REQ.
-2	B24D	28F4417						
-0	PBY-5A							
-0	PBY-5A							
-0	PBY-5A							
-3	PBZY-3	28F5415				1		
-0	PBY-5							
-0	PBY-5							
	AC224-1				2			
	AC224-2				2			
-7			CASEIN.	1	1	1		
-8			CASEIN.	1	1	1		

ASSY. DASH No. | MODEL | NEXT ASSY. | QTY.

REQUIREMENTS PER AIRPLANE

REPLACES | Gross Wt.

REPLACED BY | Adv. Wt.

SCALE 6"=1'-0"

PARTS LIST PER ASSY.

AC | NAVY NONE | NONE

HEAT TREAT | FINISH

NAME CASE-FURN-BAL-O-DIAL

CONSOLIDATED AIRCRAFT CORP. SAN DIEGO, CALIF.

OPP. HAND

SIZE D | DWG. 28F5437

NCR 380A (1) D

C.# 7890S

R

	DIM. "L"
-6	78
-7	84

Ⓐ

LET	ALTERATION	DATE	BY
Ⓐ	CHANGED -3 ASSY. WY. CHG. NOT...	5-21-42	[illegible]

MCR. 153-10 EXAMINATION

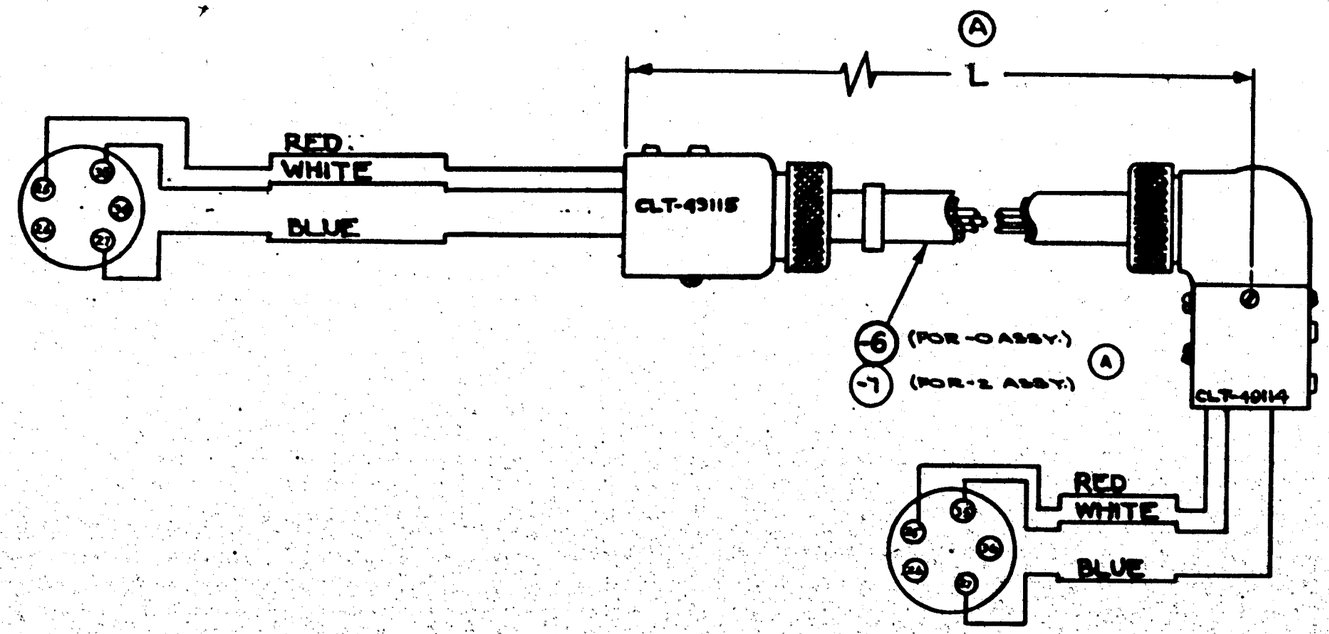

MCR. 153-10 C 91876 # 20 & ON
C. 10486 & C 91876 #1-88

*GOV'T FURN. EQUIP.

HAS BEEN DONE ON ALL AIRPLANES TO DATE

Rush Released 5-21-42

NOTE:
SOLDER WIRE FROM SHIELD TO PIN #27 ON BOTH ENDS OF CABLE

ASSY. DASH NO.	MODEL	NEXT ASSY.	REQ'D
-2	PBN-5	28F5050	1
-0	PBY5A	28F5050	1
-0	PBY-5	28F5050	1

REQUIREMENTS PER AIRPLANE

REPLACES
REPLACED BY
.42 # CALC. WT.
ACT. WT.
SCALE —
+ 1/4
STAMP PART NUMBER WHERE SHOWN

PART NO.	STOCK	MATERIAL	SPEC.	LH REQ. -0	RH REQ. -2	LH REQ. -3	RH REQ. -4	LH REQ. -5	RH REQ.
*CLT49114	PLUG - RT. ANGLE			1		1			
*CLT49115	PLUG - ST.				1		1		
-7	8 CONDUCTOR	TIREX CABLE X 84)						1	
* -4	3 CONDUCTOR	"TIREX" CABLE X 78"		1					

PARTS LIST PER ASSY.

AC
NAVY
HEAT TREAT
FINISH
WITHOUT CHANGE 4-29-42
DRAFT VEW
CHECK STRUCT MAT

NAME CABLE ASS'Y-FURN'S-DW JUNCTION BOX TO LOOP COUPLER
CONSOLIDATED AIRCRAFT CORP. SAN DIEGO, CALIF.
OPP. HAND
SIZE D
28F5442

LET	ALTERATION	DATE	BY

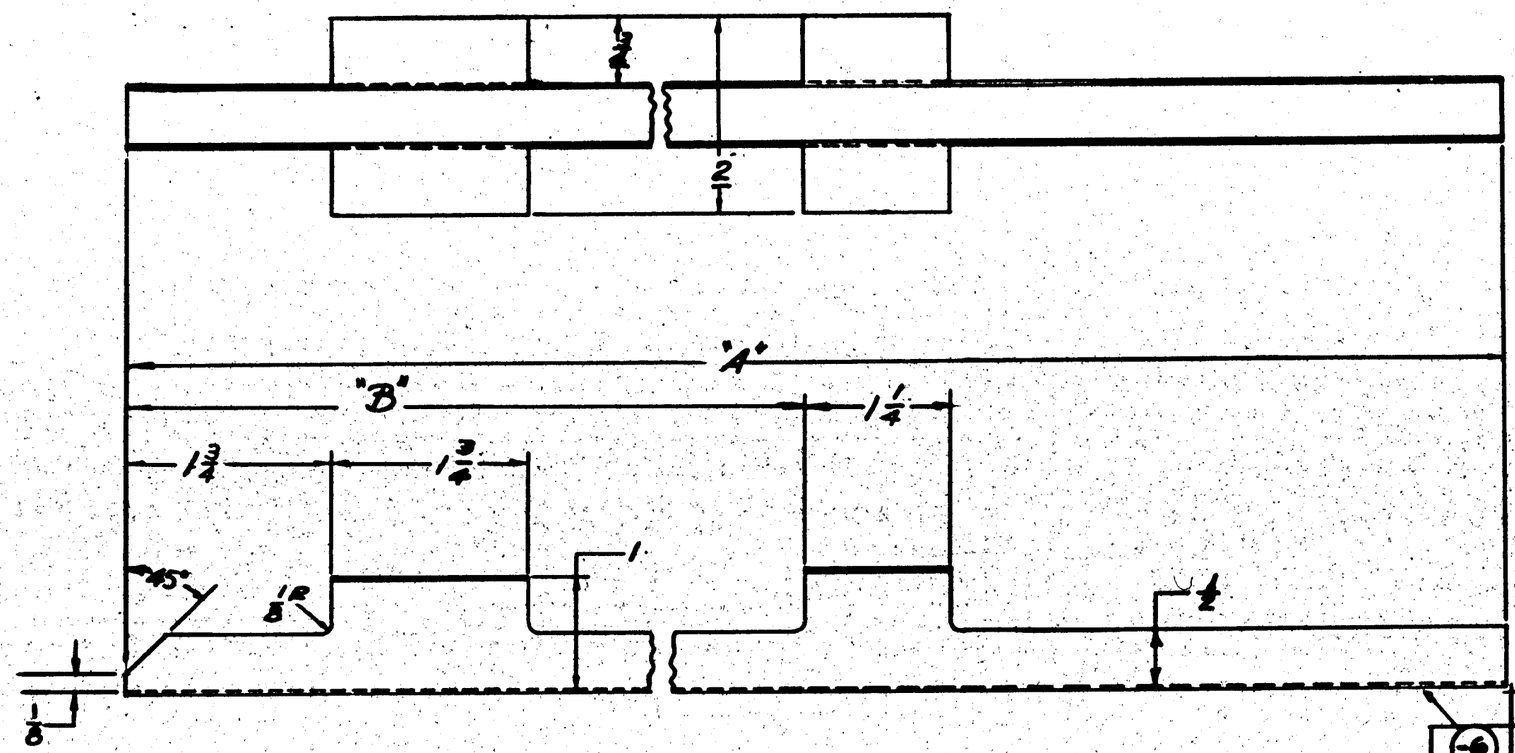

	A	B
-6	12 1/2	7 1/2
-7	14 1/2	8 1/2

FINISH CODE	
Z	ANODIC TREATMENT
P	P-27 PRIMER
AP	ALUMINIZED PRIMER
C	CADMIUM PLATE

GP-GREEN PRIME

CONT. #8476 #631 ON
CONT. #31876

ASSY. DASH NO.	MODEL	NEXT ASSY.	REQ.
-6	PBY-5A		
-7	PBY-5A		
-6	PBY-5		
-7	PBY-5		

REQUIREMENTS PER AIRPLANE

REPLACES

REPLACED BY

ASY. WT.

SCALE 12"=1'-0"

STAMP PART NUMBER WHERE SHOWN

PART NO.	STOCK	MATERIAL	SPEC.	LH REQ.	RH REQ.	LH REQ.	RH REQ.	LH REQ.	RH REQ.	LH REQ.	RH REQ.	LH REQ.	RH REQ.
				-0		-2		-3		-4		-5	
-7	4" x 4 3/16 x 4 3/16	ALCLAD	24S-T										
-6	4" x 4 3/16 x 1 3/8	ALCLAD	24S-T										

PARTS LIST PER ASSY.

AC			
NAVY NONE	Z-P-GP		
HEAT TREAT	FINISH	DRAFT	CHECK / STRUCT / MAT / APPROV / ENG.

4-22-42 STRESSED

GEORGE'S GERBER ARMSTRONG ZUCK

CHECKED 5-4-42 PWC

NAME GUARD - EMERGENCY RELEASE - COMPT. - ARMAMENT

OPP. HAND

SIZE D

DWG. 28F5453

CONSOLIDATED AIRCRAFT CORP. SAN DIEGO, CALIF.

R 5-42

LET	ALTERATION	DATE	BY

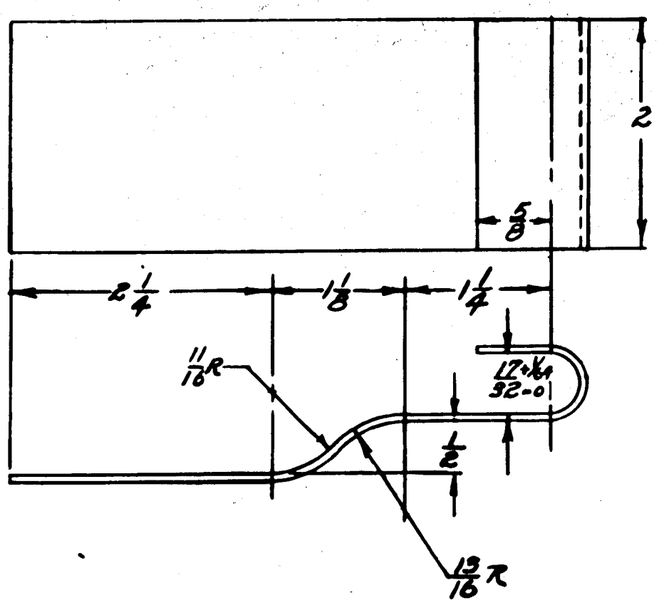

FINISH
Z- ANODIC TREATMENT
P- P27 PRIMER
G P - GREEN PRIME

PBY-5A 28B5469 1

ASSY. DASH No.	MODEL	NEXT ASSY.	QTY.

REQUIREMENTS PER AIRPLANE

REPLACES — ACT. WT. -5 .052 -7 .044

REPLACED BY — ACT. WT.

UNLESS OTHERWISE SPECIFIED ± 1/32 — SCALE 12" = 1'-0"

STAMP PART NUMBER WHERE SHOWN

PART No.	STOCK	MATERIAL	SPEC.	LH REQ. -0	RH REQ. -2	LH REQ. -3	RH REQ. -4	LH REQ. -5	RH REQ.
-5	.064 X 2 X 5 3/8	24STALC	47A8-T						

PARTS LIST PER ASSY.

AC			DRAFT	CHECK	STRUCT	MAT	APPROV	ENG
NAVY NONE	Z-P-GP							
HEAT TREAT	FINISH							

NAME SUPPORT-FURN-PILOTS VISUAL INDICATOR STOWAGE HOOK

CONSOLIDATED AIRCRAFT CORP. SAN DIEGO, CALIF.

OPP. HAND NONE

DWG. SIZE D — 28F5468

R 9-14-42

LET	ALTERATION	DATE	BY

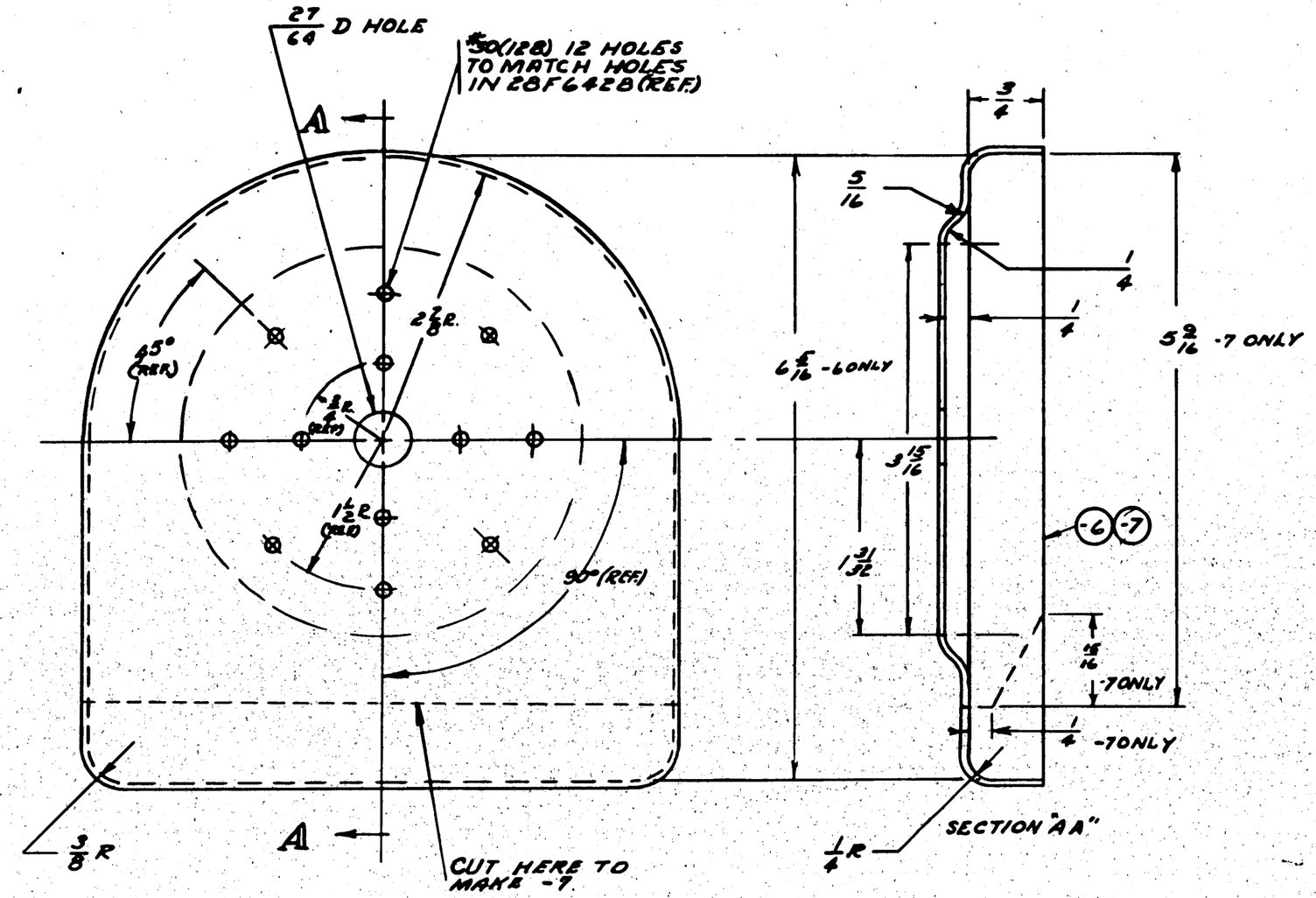

FINISH
Z-ANODIC TREATMENT
P-P27 PRIMER
GP-GREEN PRIME

ASSEM. DASH NO.	MODEL	NEXT ASSY.	REQ.
-7	PBY-5A	28F6433-2	R
-6	PBY-5A	28F6433-0	R

REQUIREMENTS PER AIRPLANE

REPLACES — CALC WT. 45

REPLACED BY — ACT. WT.

SCALE 12 = 1'-0"

STAMP PART NUMBER WHERE SHOWN

PART NO	STOCK	MATERIAL	SPEC.	LH REQ. -0	RH REQ. -2	LH REQ. -3	RH REQ. -4	LH REQ. -5	RH REQ.
28F5476-7	064 X 10 X 11	24ST ALC	47AR-T						
28F5476-6	064 X 10 X 11	24ST ALC	47AR-T						

PARTS LIST PER ASSY.

AC
NAVY NONE — HEAT TREAT
Z-P-GP — FINISH

DRAFT: ROTHER MAN 7-13-42
CHECK: C. Vern
STRUCT:
MAT: FOSTER
APPROV:
ENG: [illegible]

NAME BRACKET-FURN-PILOTS
VISUAL INDICATOR INNER LOCK

OPP. HAND NONE

CONSOLIDATED AIRCRAFT CORP. SAN DIEGO, CALIF.

DWG. SIZE D — 28F5476

R 9-14-42

S.O. 478647

LET	ALTERATION	DATE	BY
A	[illegible]		
	[illegible]	1-2-42	[illegible]

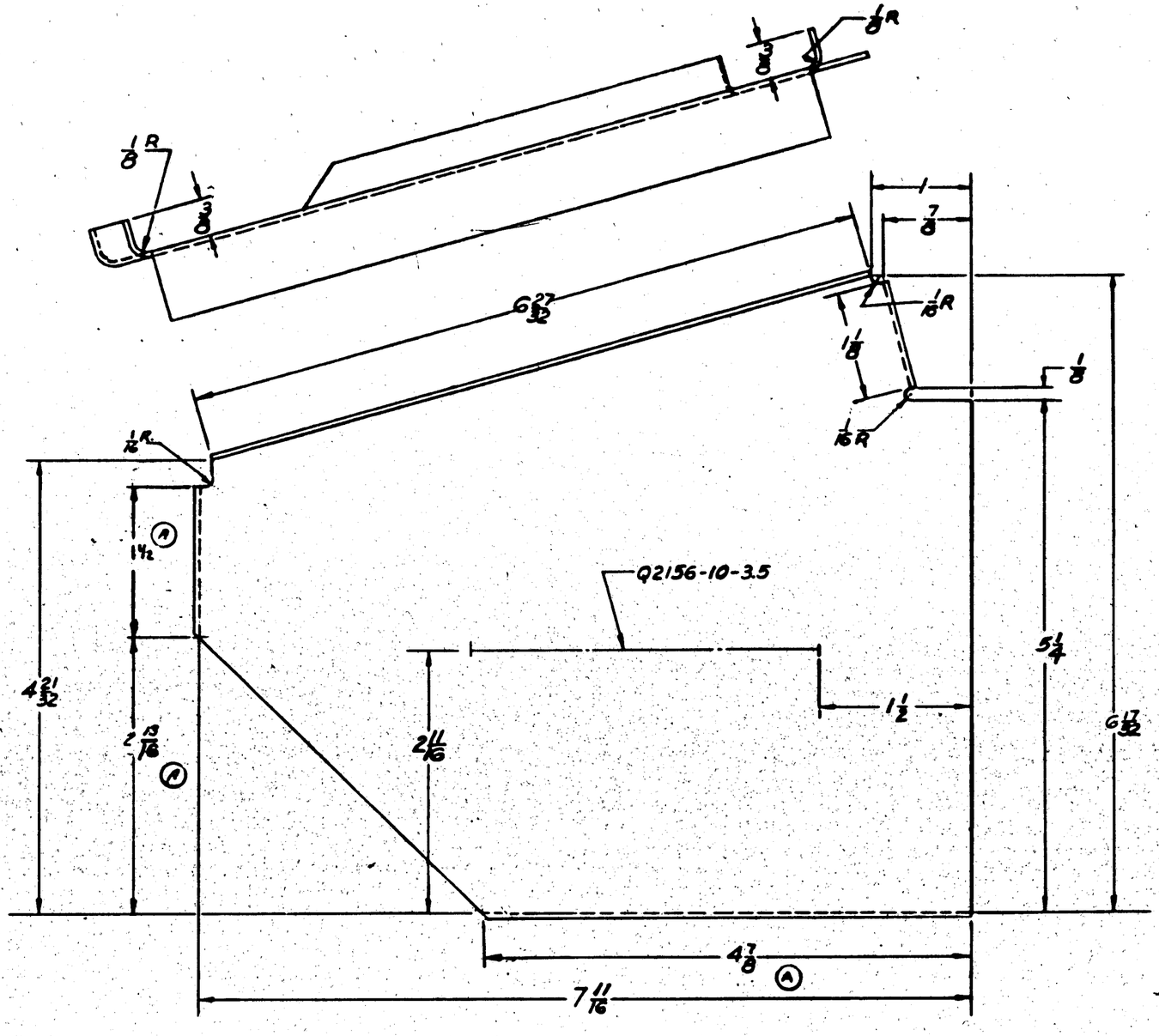

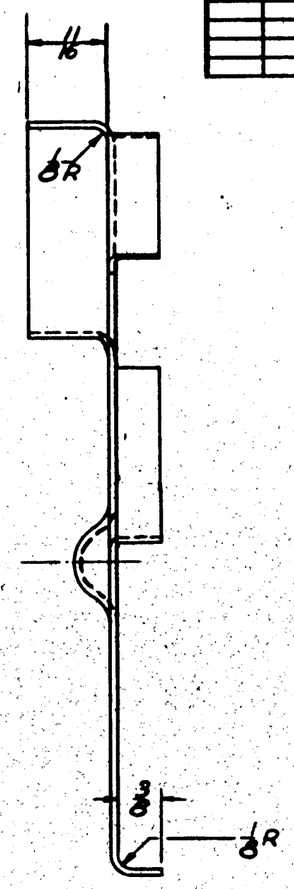

FINISH CODE	
Z	ANODIC TREATMENT
P	P-27 PRIMER
AP	ALUMINIZED PRIMER
C	CADMIUM PLATE

GP GREEN PRIME

#151 ON
C88476 #53 ON
C91876 #91 ON

PBY-5A	28F1423	1	
PBY-5A	28F1423	1	
PBY-5	28F1423	1	

ASSY. CHART No.	MODEL	NEXT ASSY.	REQ.
REQUIREMENTS PER AIRPLANE			
REPLACED BY 28F1430		25 SHIP WTS.	
REPLACED BY		ASY. WTS.	
SCALE 12"=1'-0"			

PART No.	STOCK	MATERIAL	SPEC.	LH REQ.	RH REQ.	LH REQ.	RH REQ.	LH REQ.	RH REQ.	LH REQ.	RH REQ.	LH REQ.
PARTS LIST PER ASSY.				-0	-2	-3	-4	-5				
	.090 x 7 1/2 x 8 1/2	ALCLAD	24S-T									

A.C.		STRESS [illegible]	ERROR [illegible]			LOCK WASH
NAVY NONE	Z-P-GP	11-42	2-28-42 CUSTOM			
HEAT TREAT	FINISH	DRAFT	CHECK	STRUCT	MAT	APPROV	ENG.

NAME PLATE-BOMBSIGHT TRACK-SUP'T

CONSOLIDATED AIRCRAFT CORP. SAN DIEGO, CALIF.

OPP. HAND

SIZE D

28F5483

R

LET	ALTERATION	DATE	BY
A	CHG'D DIM -6 P-721135-1 CABLE X 7'-5" WAS -- CABLE X 10'-REV. REQMTS ACC. CHG'D WT. 2.69 (WAS 3.64)	2-29-42	
B	ON FACE OF DWG. REMOVED NOTE 7 REPLACED WITH NOTE "STRIP ---WIRES." ADDED SHIELD BRAID 7 DIM. 1/2. ON FACE OF DWG. & IN B/M. REMOVED BONDING BRAID & BONDING BRAID DET. IN B/M. REPLACED SL-7 VINOLITE WITH SL-6 VINOLITE. WT. CHG. NEG.	6-15-43	MC
C	IN B/M. REMOVED Q-SDBA-4C BONDING BRAID (1). WT. CHG. NEG.	6-15-43	MC

E.O. A74338 (MCR 143-4)

POLARIZING KEY

P-721098-6

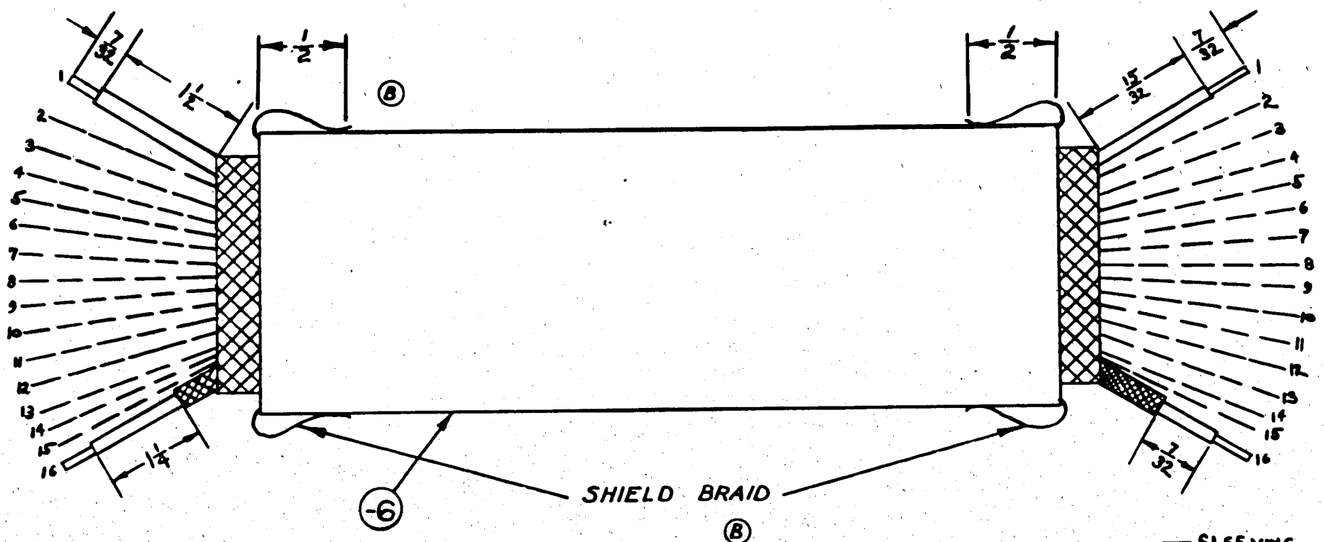

POLARIZING KEY

P721098-7

TERM NO.	LEAD NO.	LEAD COLOR
1	1	RED
2	2	GREEN
3	3	ORANGE
4	4	BLUE
5	5	WHITE-BLACK
6	6	RED-BLACK
7	7	GREEN-BLACK
8	8	ORANGE-BLACK
9	9	BLUE-BLACK
10	10	BLACK
11	11	BLACK-WHITE
12	12	RED-WHITE
13	13	GREEN-WHITE
14	14	BLUE-WHITE
15	15	BLACK-RED
16	16	WHITE

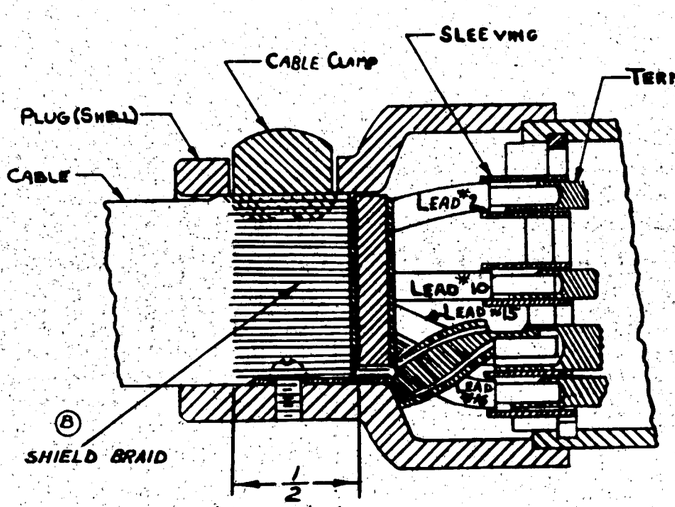

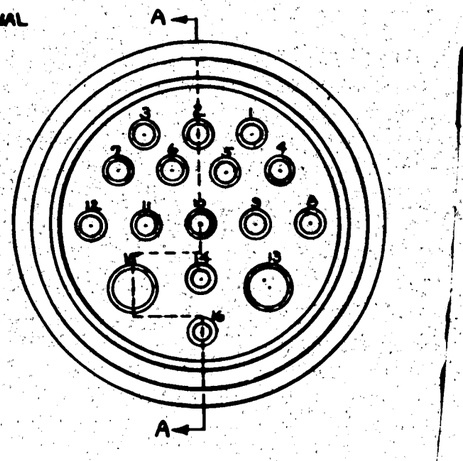

SECTION IN DIRECTION OF ARROWS A-A
PLUG & CABLE ASSEMBLY

NOTE Ⓑ

STRIP & PREPARE WIRES FOR SOLDERING INTO PLUGS. FOLD SHIELDING BRAID BACK OVER RUBBER COVER OF CABLE 1/2" & HOLD WITH WRAP OF TAG WIRE. SPOT SOLDER SHIELDING AROUND LEAD #16 TO CABLE SHIELD. UNBRAID SHIELD FROM LEAD #16 3/4", TWIST & SOLDER WITH LEAD #15 INTO TERMINAL #15. SL-6 VINOLITE SLEEVING IS USED ON ALL TERMINALS EXCEPT #15. WITH ALL WIRES SOLDERED INTO THEIR RESPECTIVE TERMINALS, SLIDE SHELL OF PLUG OVER PLUG & FASTEN WITH FOUR SCREWS FURNISHED FOR THIS PURPOSE. TIGHTEN PLUG CLAMP SUFFICIENTLY TO PRODUCE GOOD GROUND & HOLD CABLE IN PLACE WITHOUT ANY STRAIN ON WIRES.

*DENOTES GOV'T FURN EQUIP.

CONT. #C.#NOa(S)464 #91876 #90&ON (MCR 143-4)

ASSY. BASH NO.	MODEL	NEXT ASSY.	REQ.
	PBY-5A	28F6955	1
	PBY-5	28F6955	1

REQUIREMENTS PER AIRPLANE

REPLACES — REPLACED BY — Calc Wt. 2.69 — Act. Wt. —

SCALE — STAMP PART NUMBER WHERE SHOWN

PART NO.	STOCK	MATERIAL	SPEC.	LH REQ. -0	RH REQ. -2	LH REQ. -3	RH REQ. -4	LH REQ. -5	RH REQ.
CAC #SL-6	SLEEVING (VINOLITE) X 3/4 LONG			1					
CAC #SL-6	SLEEVING (VINOLITE) X 5/8 LONG			2					
CAC #SL-6	SLEEVING (VINOLITE) X 3/32 LONG			13					
#P-721098-7	PLUG			1					
#P-721098-6	PLUG			1					
-6	P-721135-1 CABLE X 7'-3"			1					

PARTS LIST PER ASSY.

A.C. — NAVY NONE — HEAT TREAT — NONE — FINISH — BUILDING — DRAFT — CHECK — STRUCT — MAT — APPROV — E.O.

NAME CABLE ASS'Y - FURN - DYNAMOTOR JUNCTION BOX TO ATB TRANSMITTER

OPP. HAND NONE

CONSOLIDATED AIRCRAFT CORP. WF SAN DIEGO, CALIF.

DWG. D — 28F5484

R

E.O. No. 3860
M.C.R. 143-4

LTR	ALTERATION	DATE	BY
A	REVISED VIEW OF PLUG SHELL CREATED -8 & -9 SUB ASS'YS. REVISED REQ'D AIRPLANE WTS: -8 (2.03) -9 (1.81)	12-15-42	Mooney
B	REMOVED ALL -0 ASS'Y NOTATION FROM FACE OF DWG & ADDED CHANGED -8 & -9 SUB ASS'Y TO -8 & -9 ASS'Y	2-13-43	Garner
C	ON FACE OF DWG. REMOVED NOTE 4 REPLACED WITH NOTE "STRIP & ..... WIRES." ALSO REMOVED BONDING BRAID DET. MOVED KEY TO 11 O'CLOCK POSITION FOR -8 ASS'Y. ADDED NEW DET. TO SHOW KEY IN 7 O'CLOCK POSITION FOR -9 ASS'Y. ADDED SHIELD BRAID 1/2 DIM. ON FACE OF DWG. IN R/M REMOVED BONDING BRAID C.A.C. BRA 2. IN R/M CHANGED CABLE LENGTH OF -6 FROM 6'6" TO 7'5 1/2" & -7 FROM 26' TO 48'. REPLACED SL-7 VINOLITE WITH SL-6. WT. CHG. NEG.	6-9-43	Mooney
D	IN R/M REMOVED B700BA-4C BONDING BRAID (1) REQ. WT. CHG. NONE	6-10-43	Mooney

NOTE ©

STRIP & PREPARE LEADS FOR SOLDERING INTO PLUG. FOLD CABLE SHIELD BACK OVER RUBBER COVER OF CABLE 1/2" & HOLD IN PLACE WITH WRAP OF TAG WIRE. SL-6 VINOLITE SLEEVING IS USED ON ALL LEADS. WITH ALL WIRES SOLDERED IN THEIR RESPECTIVE TERMINALS SLIDE SHELL OF PLUG OVER PLUG & FASTEN WITH FOUR SCREWS. TIGHTEN CLAMP SUFFICIENTLY TO PRODUCE GOOD GROUND & TO HOLD CABLE IN PLACE WITHOUT ANY STRAIN ON WIRES.

TERM. NO.	LEAD NO.	LEAD COLOR
1	1	RED
2	2	GREEN
3	3	ORANGE
4	4	BLUE
5	5	WHITE-BLACK
6	6	RED-BLACK
7	7	GREEN-BLACK
8	8	ORANGE-BLACK
9	9	BLUE-BLACK
10	10	BLACK
11	11	BLACK-WHITE
12	12	RED-WHITE
13	13	GREEN-WHITE
14	14	BLUE-WHITE
15	15	BLACK-RED
16	16	WHITE

POLARIZING KEY FOR -9 ASS'Y.

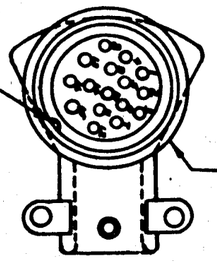

© P721098-9 (REF.)

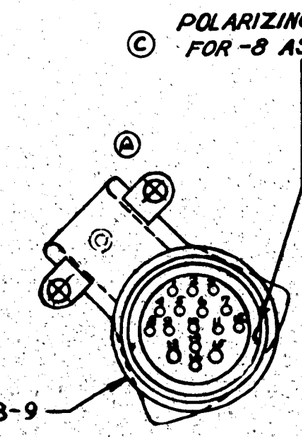

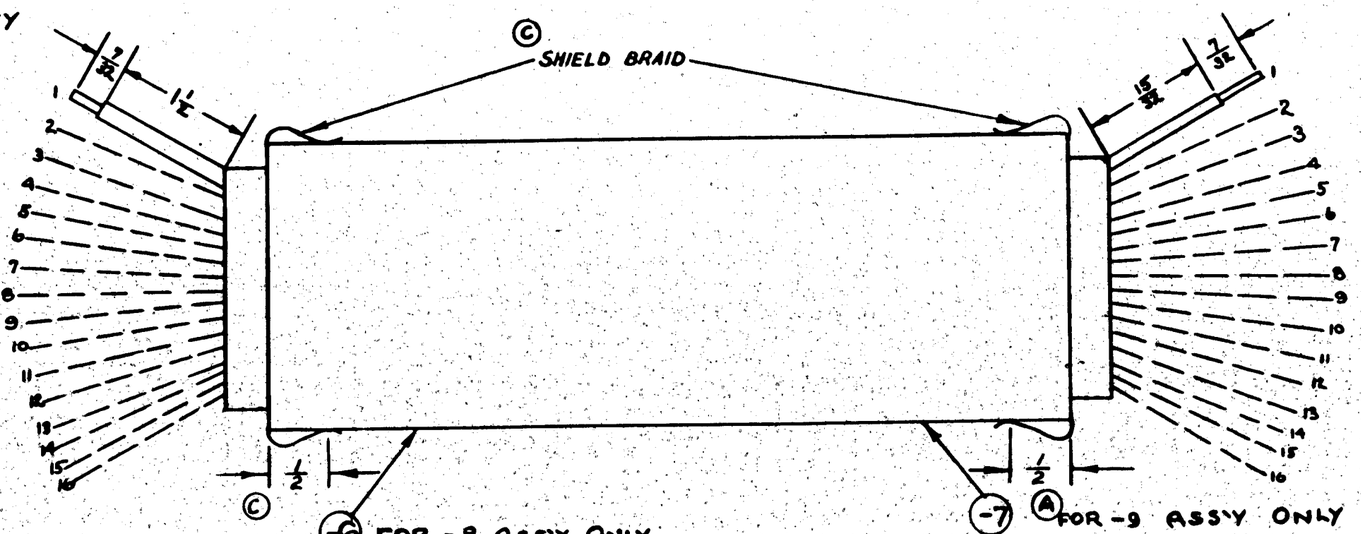

Ⓐ

ASS'Y.	ROUTE
-8	CONTROL BOX TO PILOTS R'CV'R
-9	CONTROL BOX TO RADIO R'CV'R

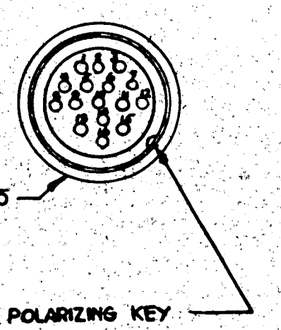

*DENOTES GOV'T. FURN. EQUIP.

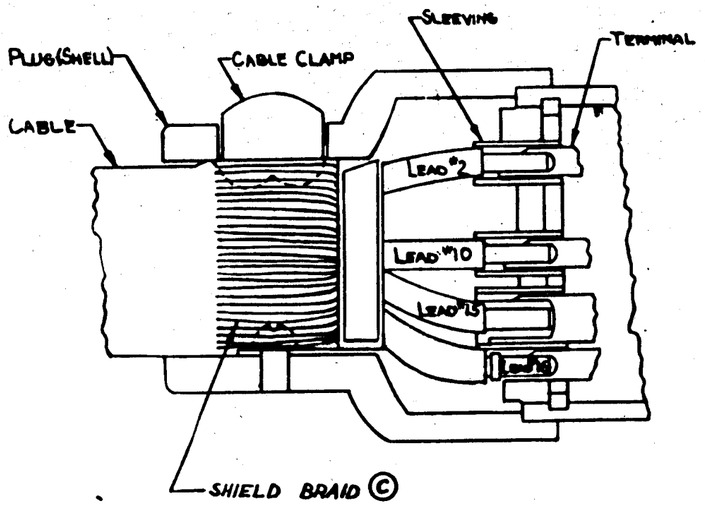

PLUG & CABLE ASSEMBLY

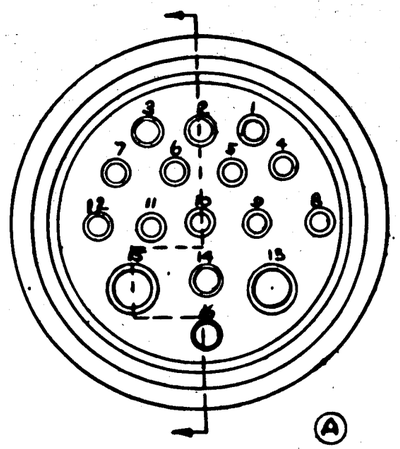

C. NO. (S) 464
C. #91876
#90 & ON
M.C.R. 143-4

QUAN. EACH ASS'Y.	MODEL	PART ASS'Y. NO.
-8	PBY-5A	28F6955
-8	PBY-5A	28F6955
-9	PBY-5	28F6955
-8	PBY-5	28F6955

REQUIREMENTS PER AIRPLANE

REPLACED	NOTED CHG. WT.
REPLACED BY	ADV. WT.
SCALE	

STAMP PART NUMBER WHERE SHOWN

PART NO.	STOCK	MATERIAL	SPEC.	LH REQ.	RH REQ.	LH REQ.	RH REQ.	LH REQ.	RH REQ.	LH REQ.	RH REQ.
#P721098-5	PLUG			1							
-7	P-721135-2	CABLE X 48			1						
-6	P-721135-2	CABLE X 75 1/2		1							
#P721098-9	PLUG				1						
CAC SL-6	SLEEVING (VINOLITE X 3/8 LONG)			3	2						
CAC SL-6	SLEEVING (VINOLITE X 5/8 LONG)			4	4						
CAC SL-6	SLEEVING (VINOLITE X 7/8 LONG)			2	6						
-8	ASS'Y			1							
-9	ASS'Y				1						

PARTS LIST PER ASS'Y.

AC NAVY	NONE	NONE	
	HEAT TREAT	FINISH	

Buckhorn Inc. Engr. 6-16-42 DRAFT — CHECK — STRUCT — MAT — APPROV — ENG

NAME CABLE ASS'Y - FURN - CONTROL BOX TO ARB RECEIVER

OPP. HAND

CONSOLIDATED AIRCRAFT CORP. SAN DIEGO, CALIF.

DWG. D SIZE 28F5485

28F5485 R

ECO A74330 (MCR 143-4)

LET	ALTERATION	DATE	BY
A	P721135 CABLE X 14 WAS P 721135 CABLE X 16 & REV'D. REQ. / AIRPLANE (WT. .495 lbs CLG)	8-19-42	[illegible]
B	ON FACE OF DWG. REMOVED NOTE & REPLACED WITH NOTE, "STRIP ---WIRES." ADDED SHIELDING BRAID & DIM. 1/2. ON FACE OF DWG. & IN B/M, REMOVED BONDING BRAID & BONDING BRAID DETAIL. IN B/M, REPLACED SL-7 VINOLITE WITH SL-6 VINOLITE WT. CHG. NEG.	8-19-42	[illegible]
C	IN B/M, REMOVED GSOBA-4C BONDING BRAID (). WT. CHG. NEG.	10-14-42	[illegible]

NOTE (B)

STRIP & PREPARE WIRES FOR SOLDERING INTO PLUGS. FOLD CABLE SHIELD BRAID BACK OVER RUBBER COVER 1/2" & HOLD WITH WRAP OF TAG WIRE. SPOT SOLDER SHIELDING ON LEAD #16 TO CABLE SHIELD. UNBRAID SHIELD FROM LEAD #16 3/4", TWIST, & SOLDER WITH LEAD #15 INTO TERMINAL #15. SL-6 VINOLITE SLEEVING IS USED ON ALL TERMINALS EXCEPT #15. WITH ALL WIRES SOLDERED INTO THEIR RESPECTIVE TERMINALS, SLIDE SHELL OF PLUG OVER PLUG & FASTEN WITH FOUR SCREWS FURNISHED FOR THIS PURPOSE. TIGHTEN PLUG CLAMP SUFFICIENTLY TO PRODUCE GOOD GROUND & HOLD CABLE IN PLACE WITHOUT ANY STRAIN ON WIRES.

TERM NO.	LEAD NO.	LEAD COLOR
1	1	RED
2	2	GREEN
3	3	ORANGE
4	4	BLUE
5	5	WHITE-BLACK
6	6	RED-BLACK
7	7	GREEN-BLACK
8	8	ORANGE-BLACK
9	9	BLUE-BLACK
10	10	BLACK
11	11	BLACK-WHITE
12	12	RED-WHITE
13	13	GREEN-WHITE
14	14	BLUE-WHITE
15	15	BLACK-RED
16	16	WHITE

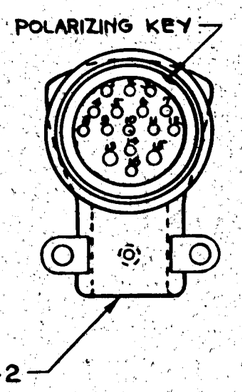

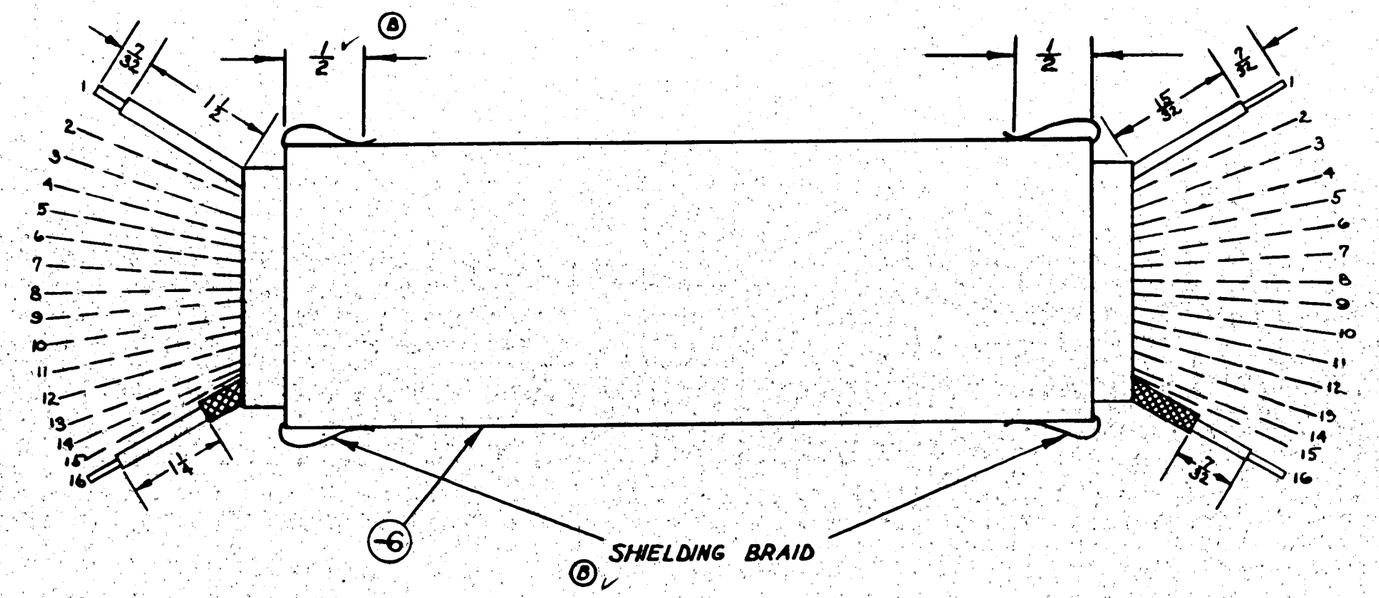

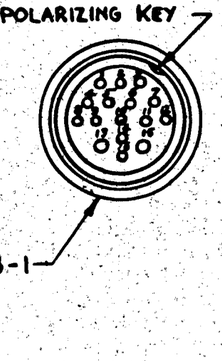

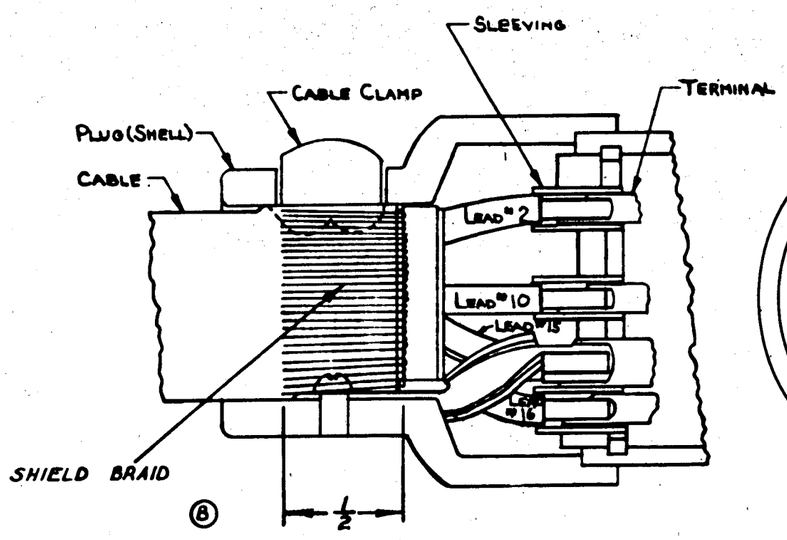

PLUG & CABLE ASSEMBLY

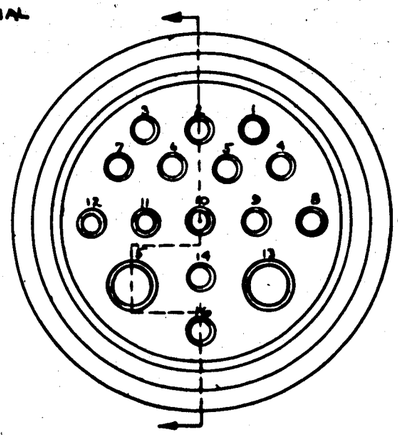

C. NO. (S) 464
C-91876 = 90/01
MCR 143-4

#DENOTES GOV'T FURN. EQUIPMENT

ASSY. BASIC NO.	MODEL	NEXT ASSY.	REQ.
	PBY-5A	28F6455	1
	PBY-5	28F6455	1

REQUIREMENTS PER AIRPLANE

REPLACES — 4.95 CALC. WT.

REPLACED BY — ACT. WT.

UNLESS OTHERWISE SPECIFIED ± 1/32 — SCALE

STAMP PART NUMBER WHERE SHOWN

PART NO.	STOCK	MATERIAL	SPEC.	LH REQ.	RH REQ.	LH REQ.	RH REQ.	LH REQ.	RH REQ.	LH REQ.	RH REQ.	LH REQ.	RH REQ.
CAC #SL-6	SLEEVING (VINOLITE X 7/8 LONG)			1									
CAC #SL-6	SLEEVING (VINOLITE X 7/8 LONG)					2							
CAC #SL-6	SLEEVING (VINOLITE X 5/32 LONG)							13					
#A-721098-2	PLUG			1									
#A-721098-1	PLUG				1								
* -6	P721135 CABLE X 14'						1						

PARTS LIST PER ASSY. — -0 -2 -3 -4 -5

AC		BUREAU
NAVY NONE	NONE	6-15
HEAT TREAT	FINISH	DRAFT

CHECK: [illegible] STRUCT: [illegible] MAT: [illegible] APPROV: [illegible] ENG: [illegible]

NAME CABLE ASS'Y-FURN-DYNAMOTOR JUNCT. BOX TO ATB PILOT'S CONTROL

OPP. HAND NONE

CONSOLIDATED AIRCRAFT CORP. SAN DIEGO, CALIF.

DWG. SIZE D — 28F5486

R

28F5486

LET	ALTERATION	DATE	BY
	E.O. "AC3593 MCR. "149-2		
A	FOR -9 42" WAS 48" & -10 4'5" WAS 10' ADDED DWG. RELOCATED POSITION OF SCREW & BRAID. REVISED REQ PER AIRPLANE BLY.		
	WT FOR -6 .96 WAS 1.22.		
	WT FOR -7 1.02 WAS 2.13	8-20-43	
	E.O. "A80069		
B	ON FACE OF DWG. IN COLOR BLK. 1 - WHITE WAS BLACK & 2 - BLACK WAS WHITE		
	NO WT. CHG.	8-20-43	
C.	ON FACE OF DWG. REVISED NOTE "REMOVE --- LEADS" REMOVED! GND. TO JUNCTION BOX LEAD & GND. DET. REMOVED POLARIZING KEY FOR -7 ASS'Y, & ADDED "FOR -7 ASS'Y" TO "POLARIZING KEY FOR -6 ASS'Y" ADDED SHIELD BRAID FOLDED BACK OVER CABLE; DIM. "D" & TAG WIRE, ON FACE OF DWG. & IN B/M, CHANGED CABLE LENGTH OF -9 FROM 42" TO 56", -10 FROM 4'5" TO 61½", & -11 FROM 24" TO 32" WT. CHG. NEG.	5-16-43	

TERM NO.	LEAD NO.	LEAD COLOR
1	1	WHITE
2	2	BLACK

(B)

POLARIZING KEY FOR -6 ASS'Y © & FOR -7 ASS'Y.

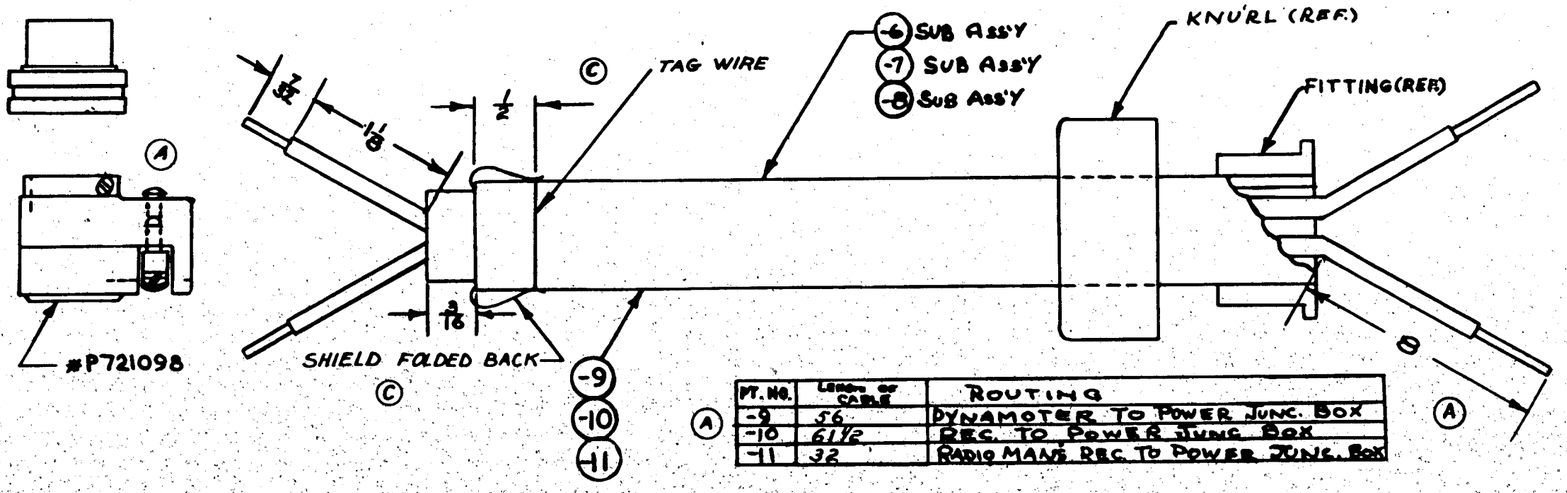

PT. NO.	LENGTH OF CABLE	ROUTING
-9	56	DYNAMOTOR TO POWER JUNC. BOX
-10	61½	REC. TO POWER JUNC. BOX
-11	32	RADIO MAN'S REC. TO POWER JUNC. BOX

(A)

© NOTE: GENERAL CABLE ASSEMBLY

REMOVE FRONT & BACK PORTION OF PLUG & LOOSEN CABLE CLAMP. FOLD SHIELD BRAID BACK OVER RUBBER COVER OF CABLE ½" AND HOLD IN PLACE WITH WRAP OF TAG WIRE. SLIDE PLUG OVER CABLE SUFFICIENTLY TO ALLOW LEADS 1 & 2 TO PROTRUDE. PLACE SLEEVES OVER EACH LEAD (1 & 2) AND SOLDER INTO TERMINALS 1 & 2 RESPECTIVELY. PUSH SLEEVES OVER TERMINALS. ADJUST CABLE IN PLUG SO CLAMP WILL TIGHTEN ON RUBBER PORTION SUFFICIENTLY TO HOLD CABLE IN PLACE WITHOUT ANY STRAIN ON LEADS.

NOTE:
WT.-6 = .96
" -7 = 1.02
" -8 = .513

*DENOTES GOV'T FURN. EQUIP.

ASSY. DASH NO.	MODEL	NEXT ASSY.	REQ.
-8	PBY-5A	28F6955	1
-7	PBY-5A		1
-6	PBY-5A		1
-8	PBY-5		1
-7	PBY-5		1
-6	PBY-5	28F6955	1

C. "NOa(S) 464

C. "91876 "80 & ON

REQUIREMENTS PER AIRPLANE

REPLACES — NOTED CALC. WT.

REPLACED BY — ACT. WT.

UNLESS OTHERWISE SPECIFIED — SCALE

STAMP PART NUMBER WHERE SHOWN

PART NO.	STOCK	MATERIAL	SPEC.	LH REQ.	RH REQ.	LH REQ.	RH REQ.	LH REQ.	RH REQ.	LH REQ.	RH REQ.	LH REQ.	RH REQ.
PARTS LIST PER ASSY.				-0		-2		-3		-4		-5	
CAC "SL-6	SLEEVING 5/16 LONG			2									
*P721098-4	PLUG			1									
" -11	K-871505 (SIMPLEX 2 COND. SHIELDED x 32)			1									
-8	SUB ASS'Y			1									
CAC "SL-6	SLEEVING 5/16 LONG					2							
*P721098-4	PLUG					1							
" -10	K-871505 (SIMPLEX 2 COND. SHIELDED x 61½)					1							
-7	SUB ASS'Y					1							
CAC "SL-6	SLEEVING 5/16 LONG							2					
*P721098-3	PLUG							1					
" -9	K-871505 (SIMPLEX 2 COND. SHIELDED x 56)							1					
-6	SUB ASS'Y												

AC		BUCKLING TEMPLATE	
NAVY NONE	NONE	6-13-42 DRAFT	CHECK
HEAT TREAT	FINISH		STRUCT. MAT. APPROV. ENG.

NAME CABLE ASS'Y-FURN-ARB RECEIVER /DYNAMOTOR TO POWER JUNCT BOX

OPP. HAND NONE

CONSOLIDATED AIRCRAFT CORP. WF SAN DIEGO, CALIF.

DWG. SIZE D — 28F5487

28F5487 R

COLUMBIA ED "F-102"

LET	ALTERATION	DATE	BY
A	DIM. 3/16 WAS 7/16 WT. CAD. PLTS.	8-1-45	JAMES

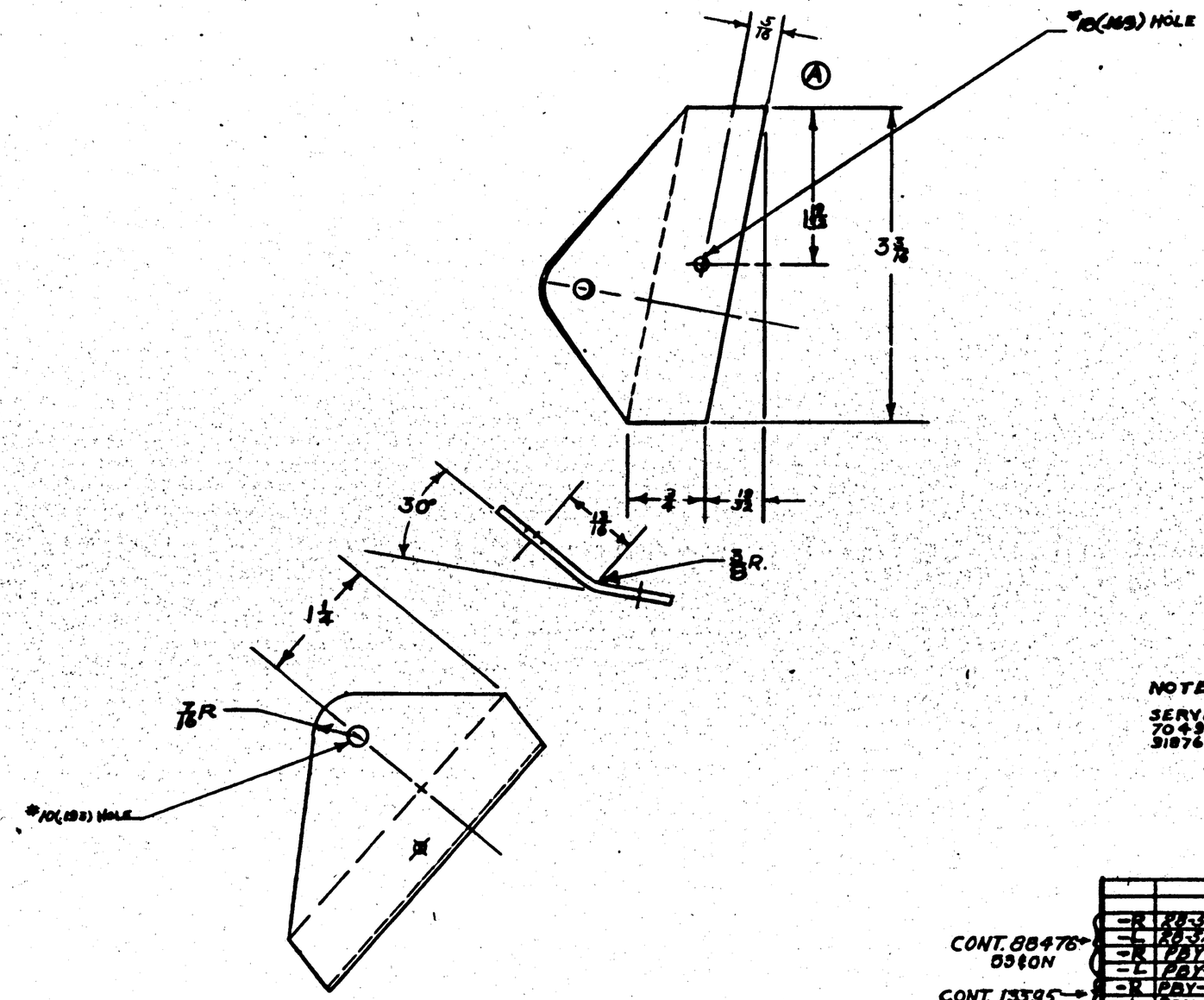

NOTE
PARTS TO BE FURNISHED BY C.A.C. FOR SERVICE ACTION ON CONTRACTS 77713, 70496-PBY5A-88116 PBY-5A (UTO52) & CONTRACT 91876 (1T090)

FINISH CODE	
Z	ANODIC TREATMENT
P	P-27 PRIMER
AP	ALUMINIZED PRIMER
C	CADMIUM PLATE

CONT. 88476 89 & ON
CONT. 13395
CONT. 91876 91 & ON

-R	PB-3AAN	28T2029	1	
-L	PB-3AAN		1	
-R	PBY-5A		1	
-L	PBY-5A		1	
-R	PBY-5A	28T2029	1	
-L	PBY-5A	28T2029	1	
-R	PBY-5	28T2029	1	
-L	PBY-5	28T2029	1	
DASH NO.	MODEL	NEXT ASSY.	REQ'D.	

REQUIREMENTS PER AIRPLANE

REPLACES .03 CAUC. STK.
REPLACED BY ASSY. STK.
SCALE 12"=1'-0"
STANDARD PARTS NUMBERS WHERE SHOWN

PART No.	STOCK	MATERIAL	SPEC.	LH REQ.	RH REQ.	LH REQ.	RH REQ.	LH REQ.	RH REQ.	LH REQ.	RH REQ.	LH REQ.	RH REQ.
PARTS LIST PER ASSY.				-0		-2		-3		-4		-5	

AC
NAVY —
HEAT TREAT
Z-P-AP
FINISH

	DRAFT	CHECK	STRUCT	MAT	APPROV	ENG.
ORIGINAL	6-10-43	6-24-43		Constant	6-24-43	Wild
CHANGE						Jost

NAME PLATE-FURN-STAB. GUYWIRE BRACE. (COLINEAR ANT. ARRAYS)
OPP. HAND 28F5492-12
CONSOLIDATED AIRCRAFT CORP. SAN DIEGO, CALIF.
SIZE D
28F5492

LET	ALTERATION	DATE	BY
A	REMOVED: QBOBD-4-160, AN442 D4, 1 1/16 DIM. & CALLOUT - 6 REQ. WT. CHG. NEG.	9-21-42	[illegible]

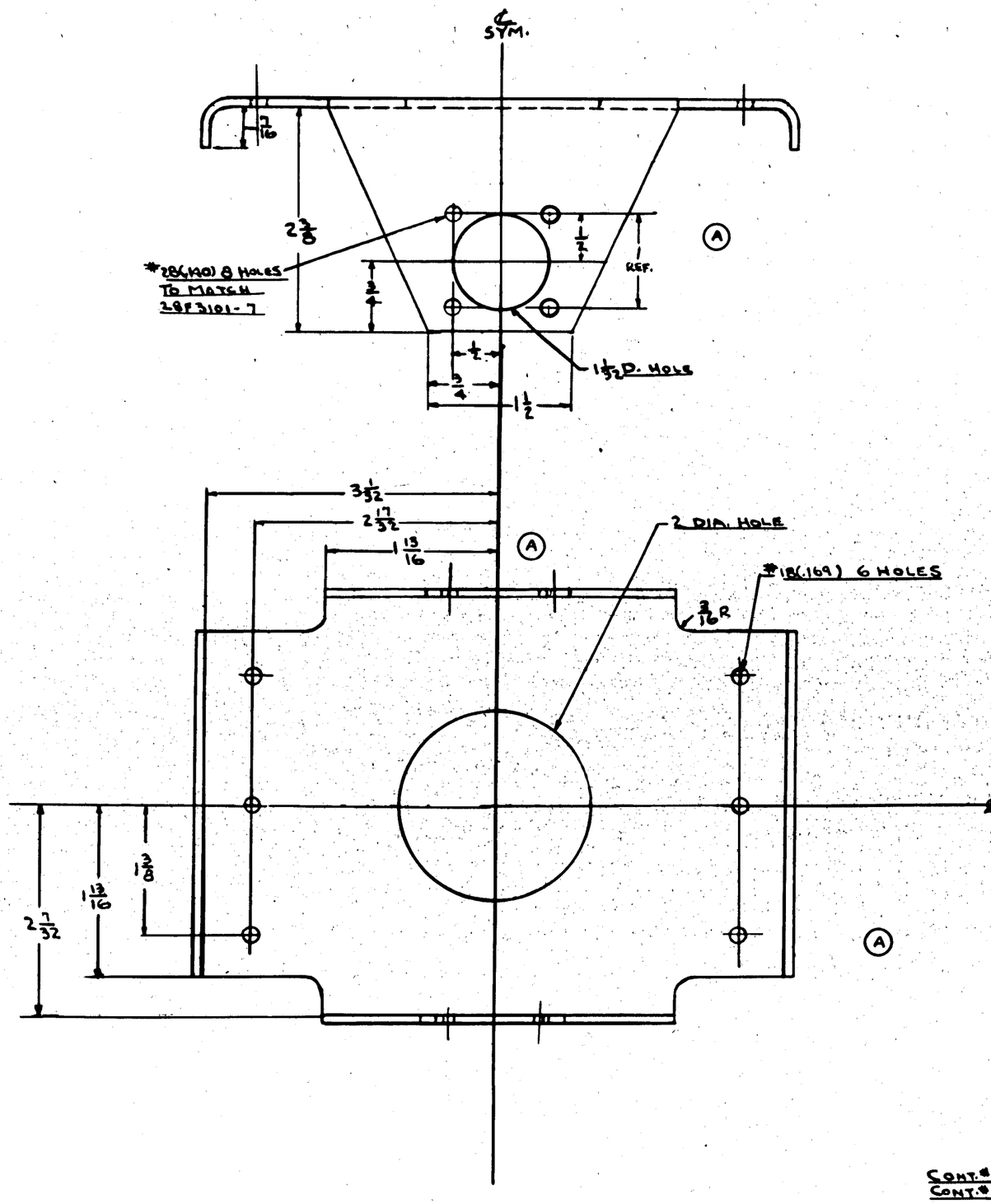

ALL BEND RADII 3/16 UNLESS OTHERWISE SPECIFIED

FINISH CODE	
Z	ANODIC TREATMENT
P	P-27 PRIMER
AP	ALUMINIZED PRIMER
C	CADMIUM PLATE

GP GREEN PRIME

CONT.'d 88476
CONT.'d 81876

ASSY. DASH No.	MODEL	NEXT ASSY.	REQ'D.
	PBY-5A	28F5417	1
	PBY-5	28F5417	1

REQUIREMENTS PER AIRPLANE

REPLACES — .69 CALC. WT.

REPLACED BY — ACT. WT.

LIMIT ON DIMENSIONS UNLESS OTHERWISE SPECIFIED ± 1/32 — SCALE 12"=1'-0"

STAMP PART NUMBER WHERE SHOWN

PART No.	STOCK	MATERIAL	SPEC.	LH REQ.	RH REQ.	LH REQ.	RH REQ.	LH REQ.	RH REQ.	LH REQ.	RH REQ.	LH REQ.	RH REQ.
PARTS LIST PER ASSY.	-991 x 7 x 9 1/2	ALCLAD	47A8-T	-0		-2		-3		-4		-5	

A℄		7-1-42					
NAVY	Z-P-GP	REVISED					
HEAT TREAT	FINISH	DRAFT	CHECK	STRUCT	MAT	APPROV	ENG.

NAME MTG BRKT ASSY - FURN'S - REMOTE IND. COMPASS

OPP. HAND NONE

CONSOLIDATED AIRCRAFT CORP. WF SAN DIEGO, CALIF.

DWG. SIZE D — 28F5498.

R 7/23/42

28F5498

28-ME, MA
MC, AMC.

LET	ALTERATION	DATE	BY
A	#10 (.193) HOLES WERE ADDED		
	& LOCATED. 8 HOLES.	3-11-41	BARTSCH

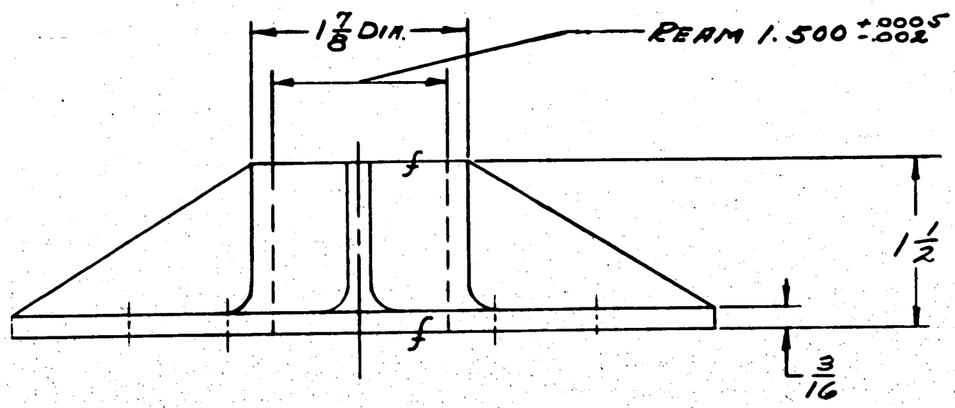

NOTE
ALL FILLETS 1/4 RADIUS.

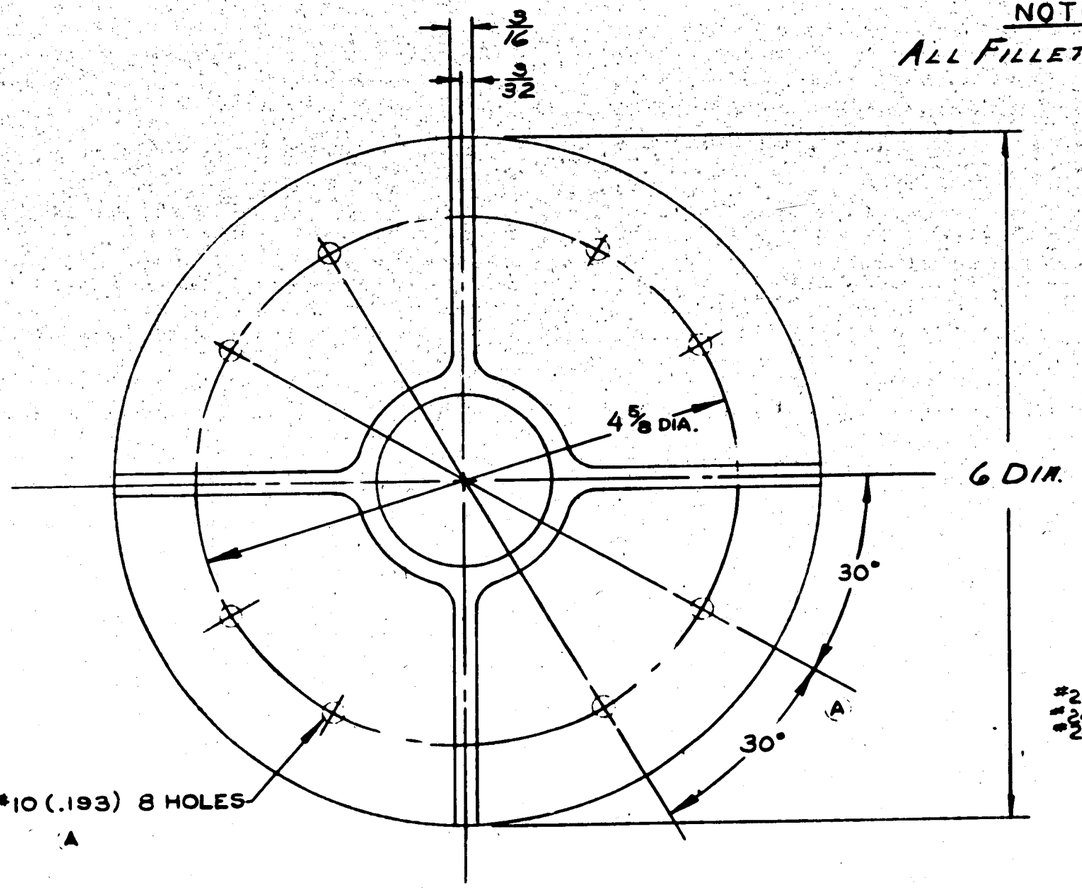

FINISH CODE	
Z	ANODIC TREATMENT
P	P-27 PRIMER
AP	ALUMINIZED PRIMER
C	CADMIUM PLATE

ASSY. DASH NO.	MODEL	NEXT ASSY.	REQ.
	PBY-5B	28F5626	1
	PBY-5A	28F5626	1
	28-5ME	28F5626	3

#2486
#2487
#2488

REQUIREMENTS PER AIRPLANE

REPLACES — CALC. WT. .79

REPLACED BY — ACT. WT.

LIGHT ON BLUEPRINTING UNLESS OTHERWISE SPECIFIED ± 1/32 & NOTED — SCALE 12" = 1'-0"

STAMP PART NUMBER WHERE SHOWN

PART NO.	STOCK	MATERIAL	SPEC.	LH REQ.	RH REQ.	LH REQ.	RH REQ.	LH REQ.	RH REQ.	LH REQ.	RH REQ.	LH REQ.	RH REQ.
		ALUM. ALLOY CASTING 4681 C.4		1									

PARTS LIST PER ASSY. -0 -2 -3 -4 -5

AC								
NAVY NONE	Z-P	APPROVED	C. Bean					
HEAT TREAT	FINISH	DRAFT 6-14-40	CHECK STRUCE	STRUCT	MAT	6/14/40 APPROV.	ENG.	

NAME BRACKET-SEAT-FURN'S BOMBER-&-WAIST-GUNNER

OPP. HAND

CONSOLIDATED AIRCRAFT CORP. SAN DIEGO, CALIF.

DWG. SIZE D — 28F5624

E.032962

LET	ALTERATION	DATE	BY
A	REDESIGNED	[illegible]	[illegible]
B	ADDED -2 ASS'Y TO A/N#	[illegible]	[illegible]
	PART # 13 & NOTE 'OMIT 10 [illegible]	[illegible]	[illegible]
C	ADDED NOTE: "ALTERNATE --- COND. N." WT. CHG. NEG.	[illegible]	[illegible]

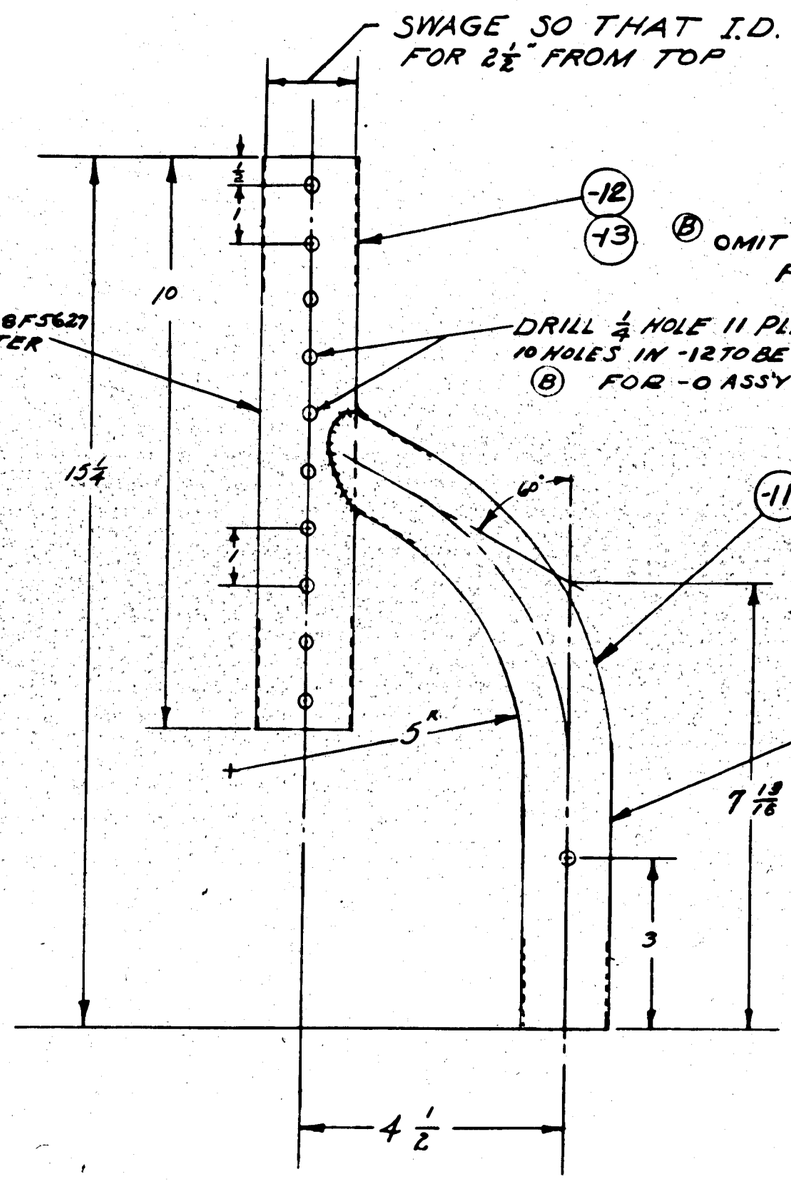

Ⓒ
* NOTE:
ALTERNATE MATERIALS FOR -11:
CHROME-MOLY WELDED TUBING, AN-T-3, TYPE I, COND. N
CHROME-MOLY SEAMLESS TUBING, AN-WW-T-850, COND. N.

O.D. OF -11 TUBE MUST BE HELD TO 1.500 +.002 -.003, 3½" FROM BOTTOM -

FINISH CODE	
Z	ANODIC TREATMENT
P	P-27 PRIMER
AP	ALUMINIZED PRIMER
C	CADMIUM PLATE

ASSY DASH NO.	MODEL	NEXT ASSY.	REQ.
	PBY-5B	28F5629	1
	28-5AMC	28F5629	1
	28-5MC	28F5629	1
	28-5MA	28F5629	1
-2	PBY-5A	28F5280	1
	28-5ME	28F5629	1

#2486
#2487
#2488

REQUIREMENTS PER AIRPLANE

REPLACES 28F5628 or 6-14-40 — CALC. WT.
REPLACED BY — ACT. WT.
SCALE 6" = 1'-0"
STAMP PART NUMBER WHERE SHOWN

	PART NO.	STOCK	MATERIAL	SPEC.	LH REQ.	RH REQ.	LH REQ.	RH REQ.	LH REQ.	RH REQ.	LH REQ.	RH REQ.	LH REQ.	RH REQ.
Ⓒ	-13	1⅝ ODX.049X10¼	STEEL TUBE	44T18			1							
	-12	1⅝ ODX.049X10¼	STEEL TUBE	44T18	1									
*	-11	1¾ ODX.058X14	" "	44T18	1		1							

PARTS LIST PER ASSY. — -0 -2 -3 -4 -5

AC		7-12-40						
NAVY NONE	C	A.N. STRAIGHT						
HEAT TREAT	FINISH	DRAFT	CHECK	STRUCT.	MAT	APPROV.	ENG.	

NAME LEG-FURN'S BOMBER'S SEAT
CONSOLIDATED AIRCRAFT CORP. SAN DIEGO, CALIF.
OPP. HAND
SIZE D
28F5628

LET	ALTERATIONS
	[illegible]
	[illegible]
B	LOCATION DIM TO B.C. [illegible]
	W.L. 96.5 (REF) REMOVED
	28B1000-[illegible]
	28B1000-[illegible]
	28B1000-[illegible]
	28B1000-[illegible]
	6 HR LOCATING [illegible]
	BULKD AT WALL [illegible]
C	CHANGED BF 535 TO BF 544 [illegible]
	28B0594 (REF) WAS CHANGED [illegible]
	(REF). NO WT CHANGE
D	-6 1/16 x 2 1/8 DIA NEOP COATED
	ASBESTOS FAB 13-25 MAT'L-6 REQ
	2 1/8 DIA NEOP IMPREG ASBESTOS
	COMM. [illegible]

E.O. A9239
E.O. A22160

(B) 28B1000-338 (REF)

5 APPROX.

32F1722

(B)

DRILL SKIN TO MATCH HOLE IN EXH OUTLET

-6 1/16 NEOPRENE COATED ASBESTOS

(B) 28B1000-340 (REF)

(E)

28F5670

Q4305 D4 RIVET (6)

(C) 28B059-2L REF

F'W'D

SKIN

6 1/4 (B)

(B)

(C) BF366

℄ BULKD #4

(B) 28B1000-342 (REF)

(B) 28B1000-344 (REF)

K/7090-C-91876
#6 ON
#6 ON
#6 ON

THIS DRWG HAS BEEN RUSH RELEASED
F.D.R 5 SETS OF PARTS.
N. STEELE

ASSY. DASH No.	MODEL	NEXT ASSY.	REQ.
-0	PBY-5B	28F7289	1
-0	PBY-5A	28F6169	1
-0	PBY-5	28F5361	1
-0	28-5ME	28F6024	1
-0	28-5 ME	28F5741	1
-0	28-5 MA	28F5741	1
-0	28-5 MC	28F5741	1

REQUIREMENTS PER AIRPLANE

REPLACES
REPLACED BY
CALC. WT. 36
ACT. WT.
SCALE 6" : 1'0"
STAMP PART NUMBER WHERE SHOWN

32F1722 FAIRING
28F5670

-6 1/16 x 2 1/8 DIA NEOPRENE COATED ASBESTOS FAB 13-25

PART No.	STOCK	MATERIAL	SPEC	-0	-3	-4	-5

PARTS LIST PER ASSY.

AC
NAVY AN-A-8
HEAT TREAT
FINISH

NAME INSTALLN-FWDN.-AFT OF MAY. HEATER EXHAUST OUTLET

CONSOLIDATED AIRCRAFT CORP. San Diego, Calif.

SIZE D
28F5631

E.O. 25928

LET	ALTERATION	DATE	BY
A	2 5/16 WAS 2 7/16	10-23-41	EVANS

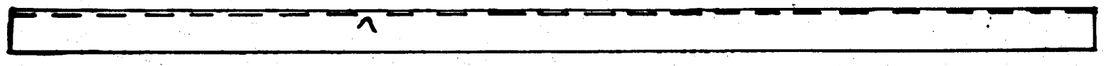

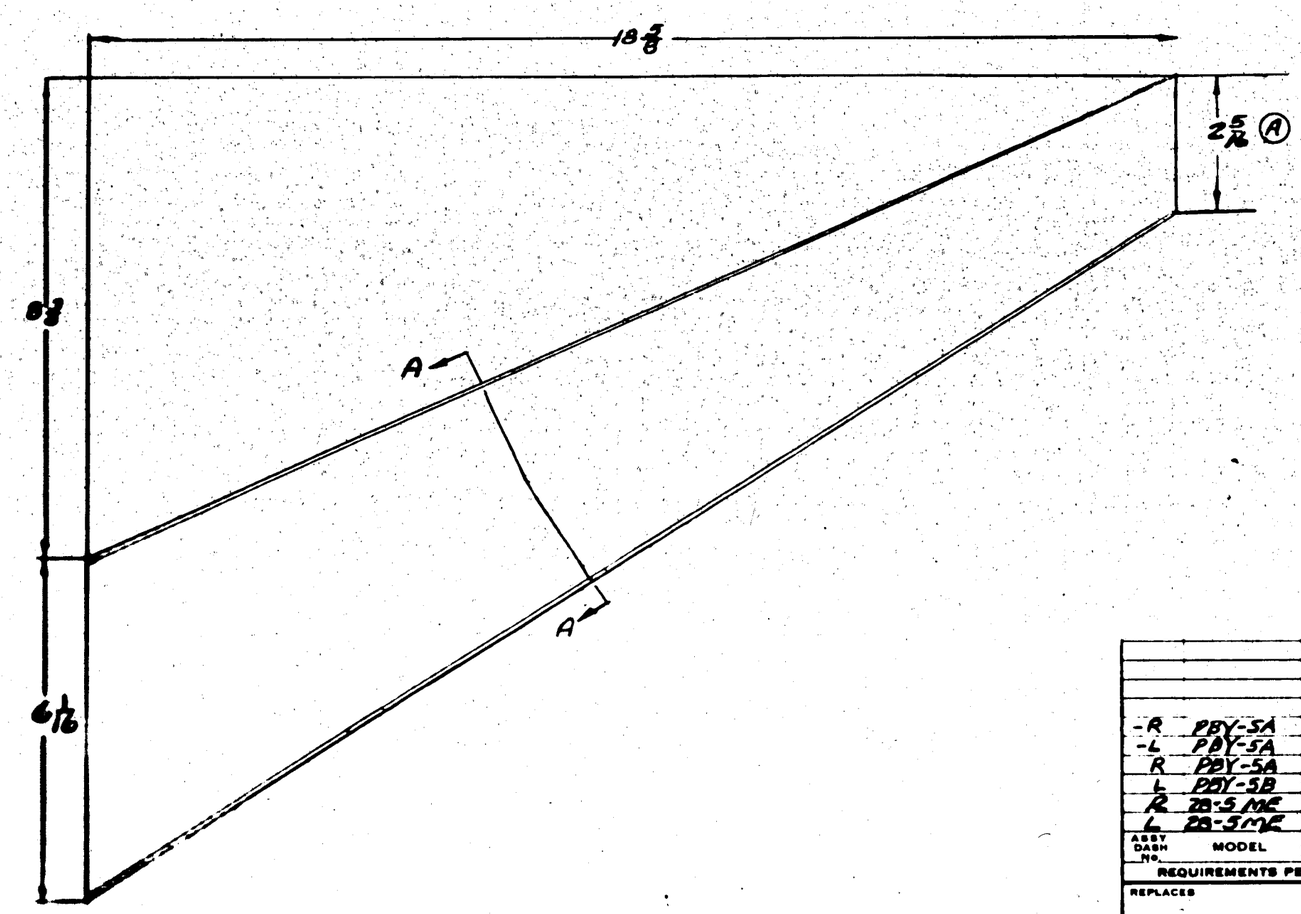

SCALE 12"=1'0"

SECTION A-A

FINISH
Z-ANODIC TREATMENT
P-P-27 PRIMER
AP-ALUMINISED PRIMER

ASSY DASH NO.	MODEL	NEXT ASSY	REQ
-R	PBY-5A	28F5719	2
-L	PBY-5A	28F5719	2
R	PBY-5A	28F5719	2
L	PBY-5B	28F5719	2
R	28-5ME	28F5719	1
L	28-5ME	28F5719	1

REQUIREMENTS PER AIRPLANE

REPLACES — CALC. WT. 36

REPLACED BY — ACT. WT.

LIGHT ON DRAWING UNLESS OTHERWISE SPECIFIED ± 1/32

SCALE 6"=1'0" if NOTED

STAMP PART NUMBER WHERE SHOWN

PART No.	STOCK	MATERIAL	SPEC.	LH REQ. -0	RH REQ. -2	LH REQ. -3	RH REQ. -4	LH REQ. -5	RH
	6R025X7X24	AL. ALLOY	57410 "H"						
	4025X7X24	AL. ALLOY	57410 "H"						

PARTS LIST PER ASSY.

A C

NAVY NONE — HEAT TREAT; Z-P-AP — FINISH

DRAFT K.N. 6-25-41; CHECK; STRUCT.; MAT.; APPROV. C.L. 7/41; ENG. J.H.H.

NAME BRACKET - FURN - 0-2 COMPASS SUPPORT

OPP. HAND 28F5720-R

CONSOLIDATED AIRCRAFT CORP. SAN DIEGO, CALIF.

DWG SIZE D

28F5720

R

LET	ALTERATION	DATE	BY
E	TRACED NO WT. CH'G	10-5-42	TAYLOR

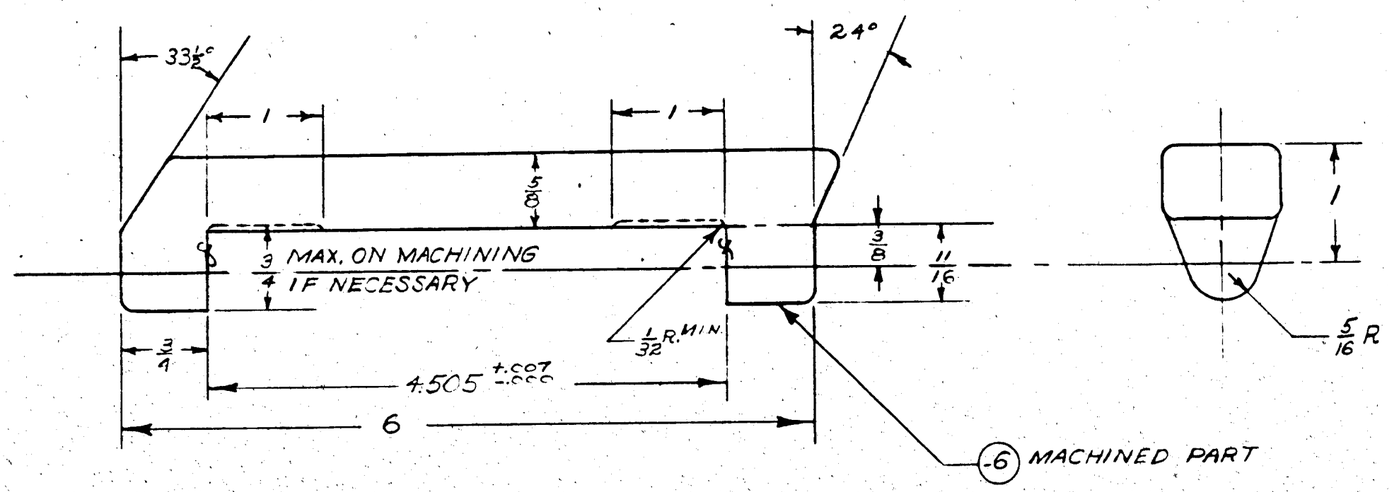

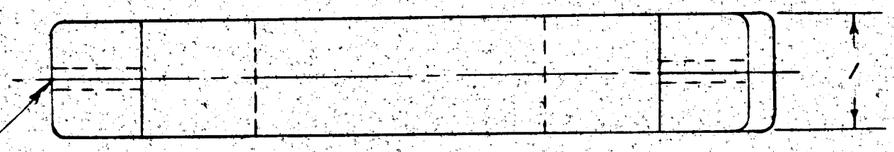

LINE REAM .187 +.0015 -.000

FINISH CODE

Z	CHROMIC TREATMENT
P	PRIMER
GP	GREEN PRIMER
C	CADMIUM PLATE

NOTES:
1. MATERIAL NOTE: -6 MAY BE MADE FROM (1) AL. ALLOY 195 T4, SPEC. AN-QQ-A-390, CL I, T.S. 29,000 P.S.I., OR (2) AL. ALLOY S195 T6, SPEC. AN-A-5, CL. II, T.S. 32,000 P.S.I.
2. ALL RADII TO BE 1/8

C#P2476
C#91876

ASSY. DASH NO.	MODEL	NEXT ASSY.	REQ'D
-6	PBY-5A	28F5719	2
-6	PBY-5	28F5719	2
-6	PBY-5B	28F5719	2
	28-5ANC	28F5719	1
	28-5ANC	28F5719	1
	28-5ME	28F5719	1
	28-5ME	28F5719	1

REQUIREMENTS PER AIRPLANE

REPLACES 28F5723-6-29-40 .34 CALC. WT.
REPLACED BY AGT. WT.
UNLESS OTHERWISE SPECIFIED DIMENSIONS ARE IN DECIMALS ± 1/32 & ½° SCALE 12" = 1'-0"
STAMP PART NUMBER WHERE SHOWN

PART No.	STOCK	MATERIAL	SPEC.	LH REQ. -0	RH REQ. -0	LH REQ. -2	RH REQ. -2	LH REQ. -3	RH REQ. -3	LH REQ. -4	RH REQ. -4	LH REQ. -5	RH REQ. -5
-6	MAKE FROM -5												
-5	CASTING	NOTED	NOTED										

PARTS LIST PER ASSY.

AC		APPLEGATE	J.C.H.	7-29-42	JWH
NAVY NOTED	Z-P-GP	6-29-42	C.N.	GREEN C.S.	
HEAT TREAT	FINISH	DRAFT	CHECK	STRUCT MAT APPROV	ENG.

NAME HINGE-FURN.-
0-2 COMPASS BRACKET SUPPORT

OPP. HAND

CONSOLIDATED VULTEE AIRCRAFT CORP. SAN DIEGO DIVISION . . SAN DIEGO, CALIF.

DWG. SIZE D 28F5723

28F5723

LET	ALTERATION		
	28-5 A—		
	E.O. A34026 A		
	E.O. A5058 PBY-5 #118 TO 167 INCL 28-5 MA, ME & MG ALL		
C	ADDED PBY-5 REQMTS (2 REQD) OF -7 ON 28F5803-3, SWIPS 110-767 INCL ALSO (28A) -6 & -7 FOR 28-5MC ON 28F5805-6 & 28-5ME & MA		
D	E.O. A28878 → 3⅝ WAS 4⅞, 3⅝ WAS 2,6 FR WAS 4⅛ INT. CHG. MFG.		
E	E.O. A34026 A → 6 WAS 5⅝ INT. CHG. MFG.		

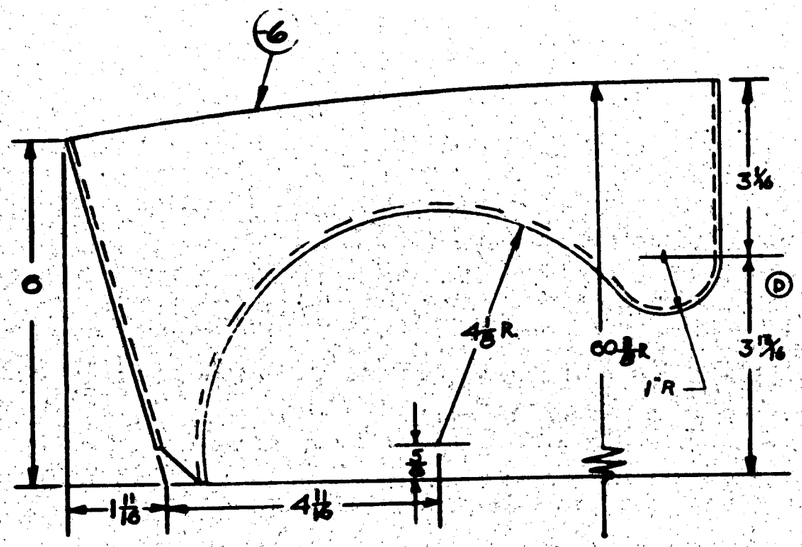

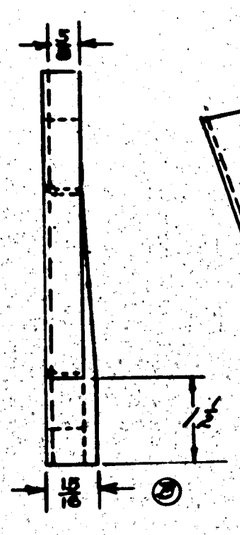

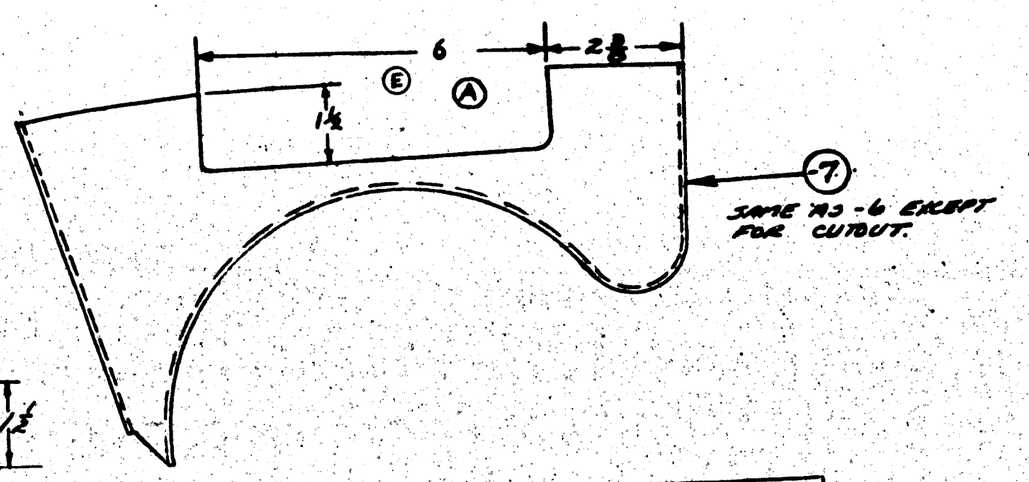

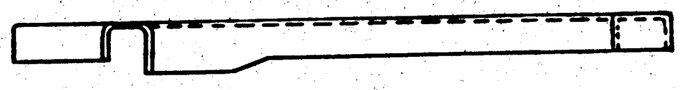

FINISH CODE	
Z	ANODIC TREATMENT
P	F-27 PRIMER
AP	ALUMINIZED PRIMER
C	CADMIUM PLATE

ALL BEND RADII 3/16

2 NOTE - ALL FLANGES TO BE 5/8 EXCEPT AS SHOWN

CONTRACT "70496," 118 TO 167 INCL C-791876-

ASSY DASH NO.	MODEL	NEXT ASSY.	QTY.
-7	PBY-5B	28F5805	1
-6	PBY-5A	28F5805	1
-6	PBY-5	28F5805	3
-7	PBY-5	28F5805	1
-6	28-5MC	28F5805	1
-7	28-5MC	28F5805	1
-6	28-5MA	28F5805	1
-7	28-5MA	28F5805	1
-6	28-5ME	28F5805	1
-7	28-5ME	28F5805	1

REQUIREMENTS PER AIRPLANE

REPLACES — REPLACED BY — ASSY. QTY.

SCALE 6" = 1'0"

+ 1/32

PART No.	STOCK	MATERIAL	SPEC.	LH REQ.	RH REQ.	LH REQ.	RH REQ.	LH REQ.	RH REQ.	LH REQ.	RH REQ.	LH REQ.	RH REQ.
PARTS LIST PER ASSY.				-0	-2	-3	-4	-5					
-7	.032 X 9 X 15	ALCLAD	2MG - A	1									
-6	.032 X 9 X 15	ALCLAD	24S - A	1									

AC — NAVY SR-53 — P-1AP

HEAT TREAT — FINISH

DRAFT: Crofton 9/4/40 — CHECK — STRUCT. — MAT — APPROV — ENG.

NAME SUPPORT - WATER TANK - MECH'S COMP - L.H.

CONSOLIDATED AIRCRAFT CORP. San Diego, Calif.

OPP. HAND

ENGR. D — DWG. 28F5804

LET	ALTERATION	DATE	BY
A	CHANGE PART -13 TO PART -5 & -7 ADD PART -11 & -12, ADDED DETAIL	10-31-41	[illegible]
B	ON FACE VIEW, CHG. FROM [illegible] TO [illegible]	11-5-41	[illegible]

CA 32126

Ⓐ

$26\frac{7}{16}$

$16\frac{13}{16}$

$6\frac{7}{16}$

A

$\frac{5}{16}$

$\frac{3}{8}$

$2\frac{3}{4}$

DRILL #10 (.1935) ON ASS'Y. TYPICAL BOTH SIDES

$4\frac{5}{32}R^{+\frac{1}{32}}_{-0}$

$\frac{7}{16}$

$\frac{1}{2}$

25

$5\frac{13}{16}$

12

$\frac{5}{8}$

$\frac{3}{16}$ R. TYPICAL

.051

04303 AD4 FLUSH THIS SIDE SPACE EQUALLY AT 2 (MARK)

$\frac{3}{4}$

A

$23\frac{9}{8}$

Ⓐ TRIM THIS EDGE TO SUIT ON ASS'Y

SECT. A-A

Ⓑ 05761-K5-14.5 KHAKI WEBBING 2 REQ'D CEMENT & RIVET TO (-6) USE EAGLE BRAND CEMENT

⑥ .051 ALCLAD SHT.

FINISH CODE	
Z	ANODIC TREATMENT
P	P-7 PRIMER
AP	ALUMINIZED PRIMER
C	CADMIUM PLATE

ASSY. DASH NO.	MODEL	NEXT ASSY
	28-STMC	28STA
	28STA	28STK

REQUIREMENTS PER AIRPLANE

REPLACES — 1.37 CALC WT.

REPLACED BY — ACT WT.

SCALE 6"=1'-0"

STAMP PART NUMBER WHERE SHOWN

05761-K5-14.5 KHAKI WEBBING STRAP 2 REQ'D

PART No	STOCK	MATERIAL	SPEC.	LH REQ.	LH REQ.	LH REQ.	LH REQ.	LH REQ.
PARTS LIST PER ASSY.				-0	-2	-3	-4	-5
-6	051X14X27	ALCLAD	47A0 "X"					

AC · NAVY (4) 3253 GT — ZP — HEAT TREAT — FINISH

DRAFT: [illegible] 2-24-42 — CHECK: RAH 2-24-42 — STRUCT. — MAT. — APPROV. — ENGR.

NAME SOCKET-FURNS-WATER TANK STOWAGE

CONSOLIDATED AIRCRAFT CORP. SAN DIEGO, CALIF.

OPP. HAND

SIZE D — DWG. 28F5846

WR

LET		LENGTH	QP
A	[illegible]		

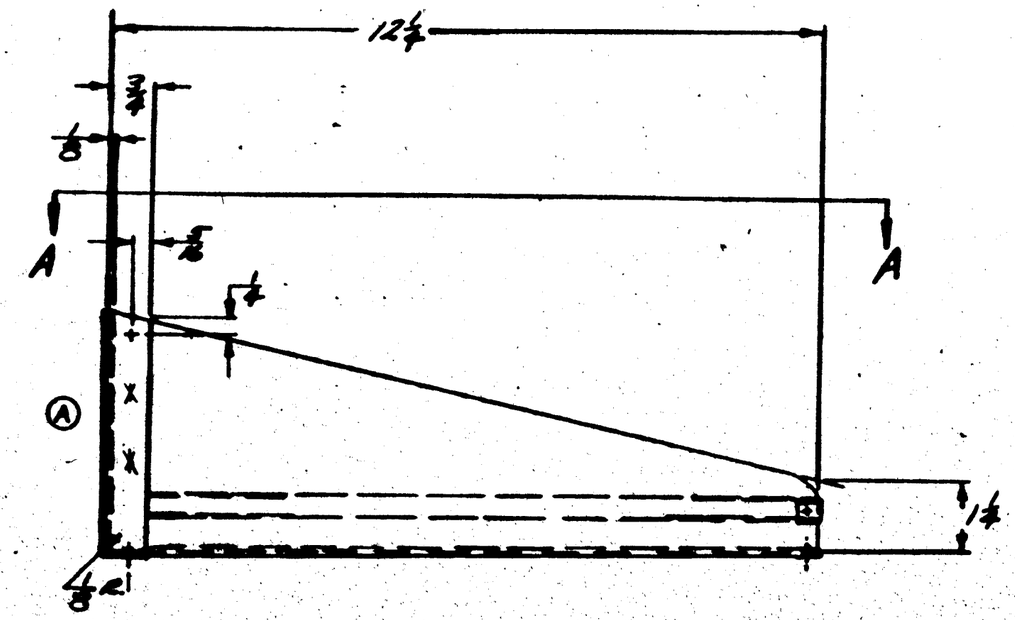

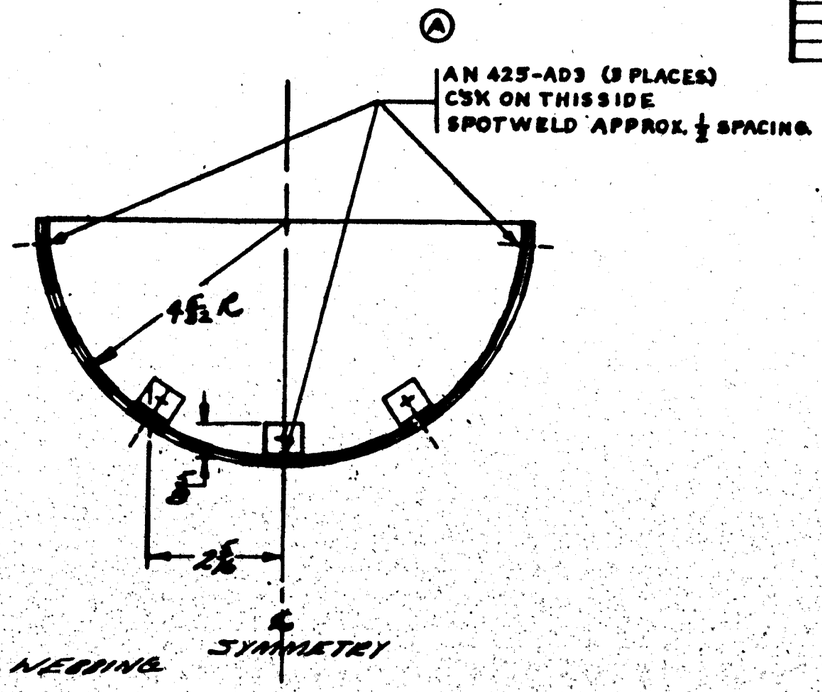

(-7) .040 ALCD. SHT.

Q5761-K5-14 KHAKI NEOPRENE
3 REQ'D
CEMENT & RIVET TO (-6)
USE EAGLE BRAND CEMENT

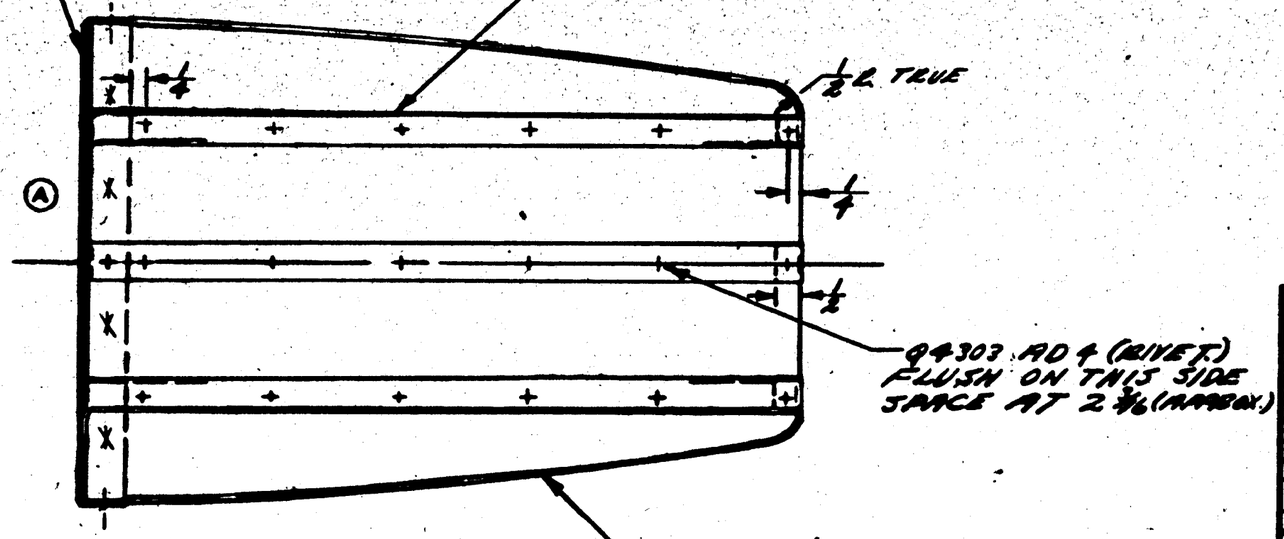

VIEW A-A

(-6) .040 ALCD. SHT.

FINISH CODE	
Z	ANODIC TREATMENT
P	R-07 PRIMER
AP	ALUMINIZED PRIMER
C	CADMIUM PLATE

ASSY. SALES NO.	MODEL	NEXT ASSY.	REQ
	28-XAMN	28F5916	2
	28-XAMC	28F5916	2
	PBY-5A	28F5716	4

REQUIREMENTS PER AIRPLANE

REPLACES 67 CALC WT.

REPLACED BY ASY. WT.

SCALE 6"=1'-0"

AM425 AD3

Q5761-K5-14 P

Q4303 AD4 P

PART No.	STOCK	MATERIAL	SPEC.	LIN REQ. -0	LIN REQ. -2	LIN REQ. -3	LIN REQ. -4	LIN REQ. -5
	-7 .040 X 5 3/4 X 10	ALCLAD 2024-T3	QQ-A-250/4	1				
	-6 .040 X 11 1/2 X 12	ALCLAD 2024-T3	QQ-A-250/4	1				

PARTS LIST PER ASSY.

AC

NAVY-71 SERIES C-7 — ZP

HEAT TREAT — FINISH

DRAFT: B.C.H. — CHECK — STRUCT. — MAT — APPROV. — ENG.

NAME GUIDE-FURNS-WATER TANK STOWAGE

CONSOLIDATED AIRCRAFT CORP. San Diego, Calif.

OPP. HAND

SIZE D — DWG. 28F5850.

LET	ALTERATION	DATE	BY
C	TRACED. NO WT. CHG.	10-7-43	[illegible]

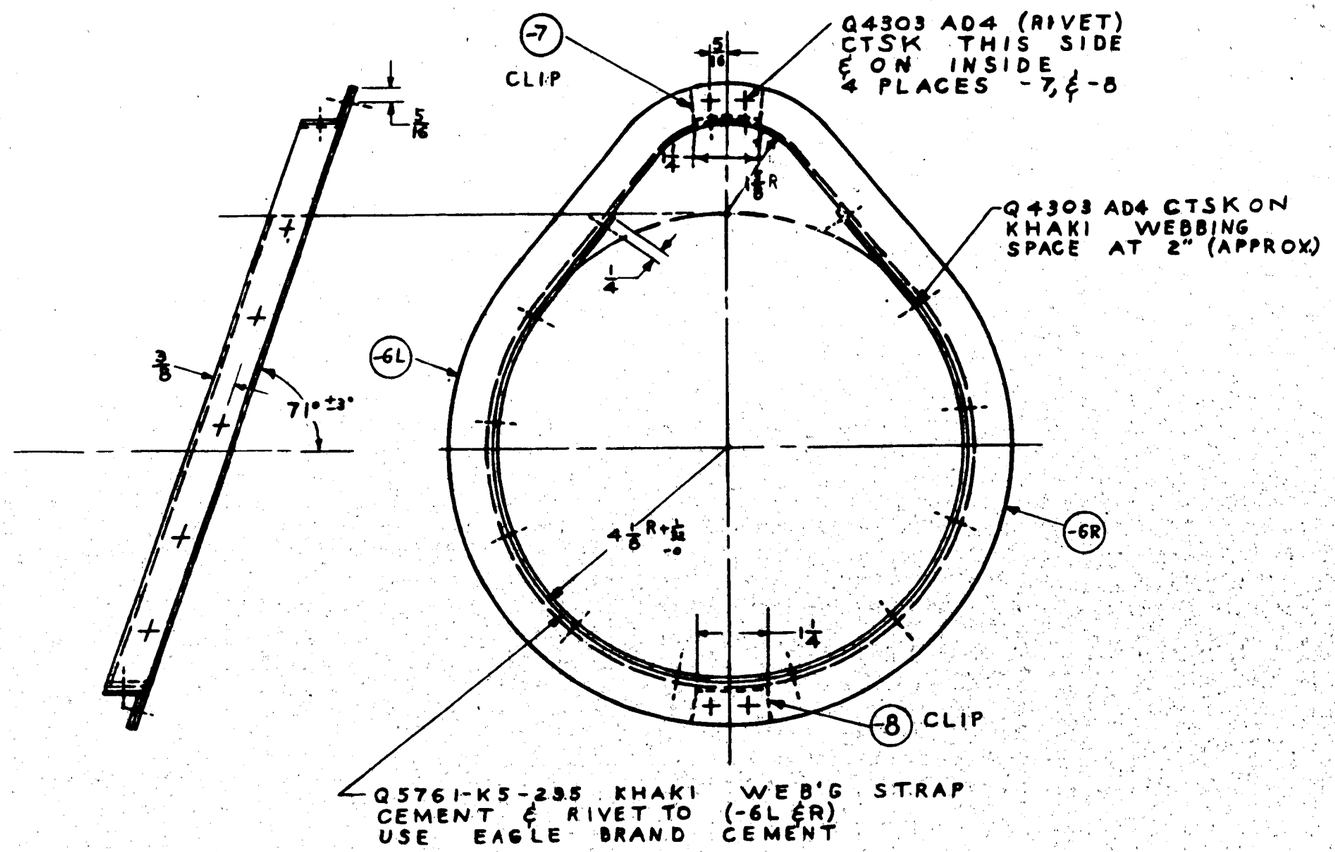

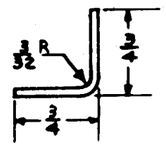

DETAIL -6L ℄ -6R
SCALE 12" = 1'-0"

	PBY-5A	28B5554	2	
	285AMN	28B5554	2	
	285AMC	28B5554	2	Q4303 AD4
ASS'Y GROUP NO.	[illegible]	NEXT ASS'Y	REQ.	Q5761-K5-235

REQUIREMENTS PER AIRPLANE

REPLACES 28F5851-10-3 | CALC. WT. .18

REPLACED BY | ACT. WT.

WHAT ON INSPECTIONS UNLESS OTHERWISE SPECIFIED: 1/32

SCALE 6" = 1'-0" & NOTED

STAMP PART NUMBER WHERE SHOWN

PART NO.	STOCK	MATERIAL	SPEC.	LH REQ.	RH REQ.	LH REQ.	RH REQ.	LH REQ.	RH REQ.	LH REQ.	RH REQ.	ZONE
				-0		-2		-3		-4		-5	
-8	.064XCUT-OFF	ALCLAD	QQ-A-362 COND T	1								
-7	.064XCUT-OFF	ALCLAD	QQ-A-362 COND T			1						
-6R	.072X1 7/8X18	ALC. SH'T	QQ-A-362 COND T					1				
-6L	.072X1 7/8X18	ALC. SHT	QQ-A-362 COND T							1		

PARTS LIST PER ASSY.

A.C.		E. SMILLIE			SC	W.F.Z.	J.M.H.
NAVY	ZP-GP	10-2-40	R.R.H.	GREEN	11-6-40	11-6-40	
HEAT TREAT	FINISH	DRAFT	CHECK	STRUCT.	MAT.	APPROV.	ENG.

NAMERING - FURN'S - WATER TANK STOWAGE SUPPORT

OPP. HAND

CONSOLIDATED AIRCRAFT CORP. SAN DIEGO, CALIF.

DWG. D 28F5851

SIZE

FINISH CODE	
Z	ANODIC TREATMENT
P	P-27 PRIMER
GP	GREEN PRIMER
C	CADMIUM PLATE

28F5851

LET	ALTERATION	DATE	BY

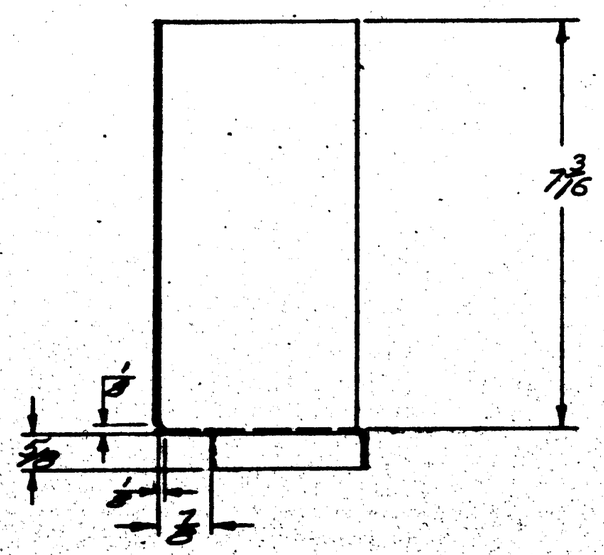

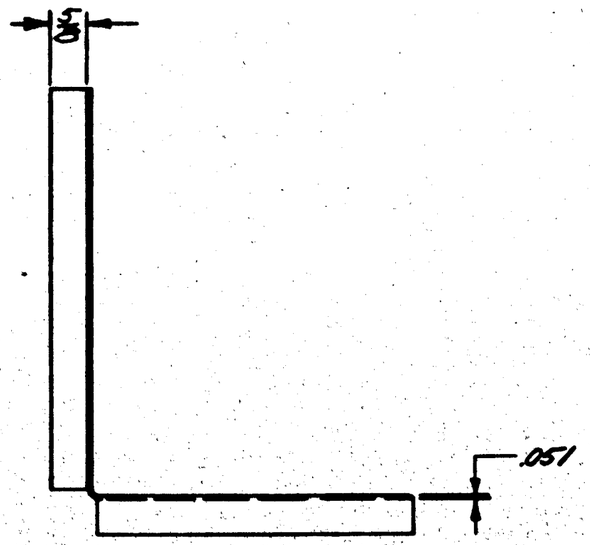

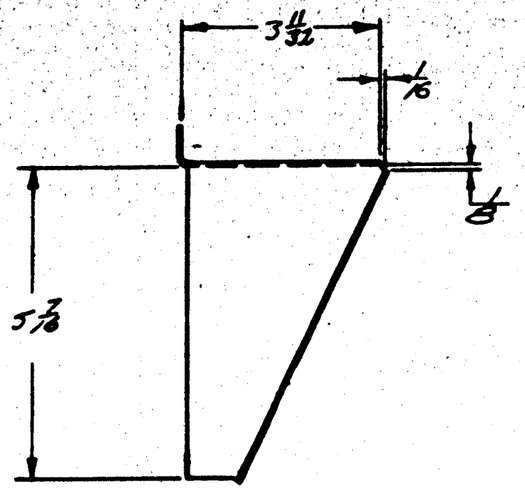

NOTE:
ALL BEND RADII
EQUALS 1/8

FINISH CODE	
Z	ANODIC TREATMENT
P	P-17 PRIMER
AP	ALUMINIZED PRIMER
C	CADMIUM PLATE

ASSY. DASH NO.	MODEL	NEXT ASSY.	QTY.
	28-5AMC	28F5916	1
	PBV-5A	28F5916	1

REQUIREMENTS PER AIRPLANE

REPLACES — CALC. QTY. .285

REPLACED BY — ACT. QTY.

UNLESS OTHERWISE SPECIFIED DIMENSIONS ARE IN INCHES ± 1/32 — SCALE 6"-1'-0"

PART NO.	STOCK	MATERIAL	SPEC.	LAY OUT DWG. -0	LAY OUT DWG. -2	LAY OUT DWG. -3	LAY OUT DWG. -4	LAY OUT DWG. -5
	.051 x 5 3/4 x 14	ALCLAD	17ST	1				

PARTS LIST PER ASSY.

AC		DWG. & SPEC.					
NAVY NONE	XP		BRH	BRH	7/14/40		
HEAT TREAT	FINISH	DRAFT	CHECK	STRUCT	DAT	ARMOR	ENG.

NAME BRACKET-FURNS-
WATER TANK STOWAGE

OPP. HAND

CONSOLIDATED AIRCRAFT CORP. San Diego, Calif.

SIZE D — 28F5918

R

LET	ALTERATION	DATE	BY
A	MATERIAL FOR -1 "FELT..., GR A" WAS "2F7 GR A FELT PAD 14 x 10 x 13 3/4 - ATTACH TO -6 WITH 5260 MARINE GLUE" WT. CHG. NEG.	10-21-42	MOLL

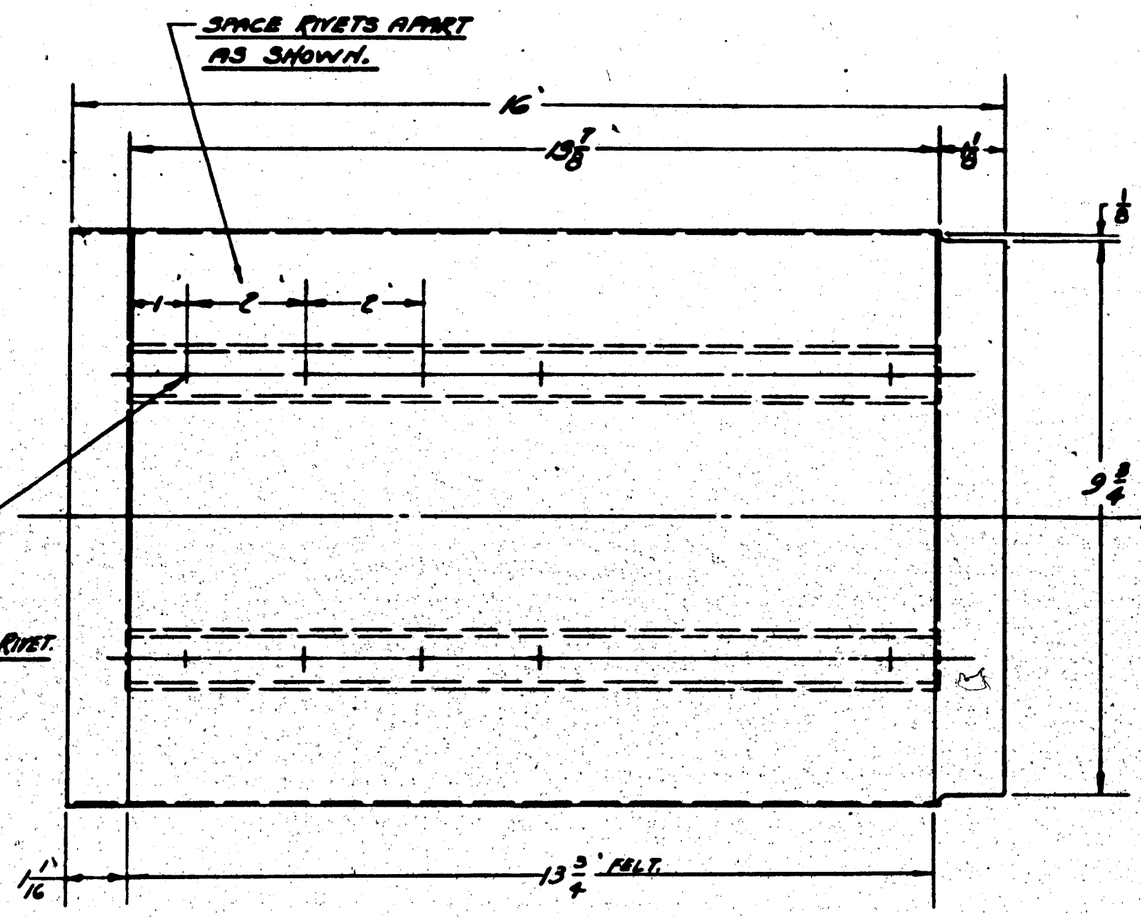

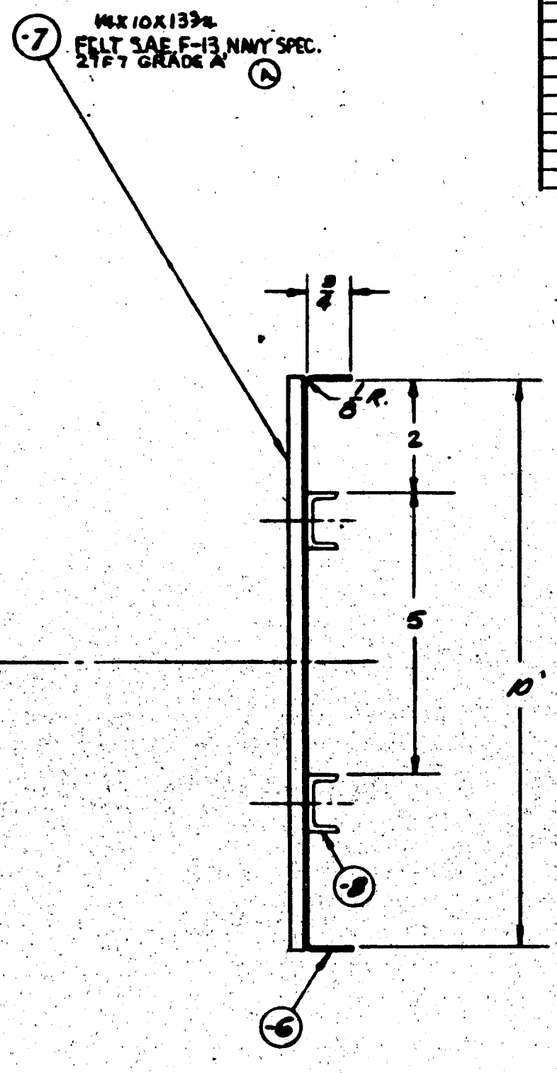

3 AIRPLANES SERIAL Nos 2486
2487
2488

CONTRACT ORDER 70496
CHANGE No a-1

PBY-5A/OSF6B1 1

ASSY. SALES NO.	MODEL	NEXT ASSY.	REQ.
REQUIREMENTS PER AIRPLANE			
REPLACES			1.0 Ass'y. Qty.
REPLACED BY			Ass'y. Qty.
LOCK OR ENGINEERING RELEASE STRUCTURE DRAWING: Key 1		SCALE 6"=1'-0"	
STAMP PART NUMBER WHERE SHOWN			

AN 426 — D4

PART No.	STOCK	MATERIAL	SPEC.	LH REQ. -0	RH REQ. -2	LH REQ. -3	RH REQ. -4	LH REQ. -5	RH REQ.
-8	K1868 x 14 1/2	EXT.	4GA9-T	8					
-7	14 x 10 1/8 x 14	FELT	2F7 F-13A	1					
-6	6061 x 2 x 16 1/2	ALCLAD	47A8-T	1					

PARTS LIST PER ASSY.

A C							
NAVY —	Z-P-2AP (-6)	3/3/41		FAF JPC			
HEAT TREAT	FINISH	DRAFT	CHECK	STRUCT.	MAT	APPROV.	ENG.

NAME BASE-ARM'T-OBLIQUE CAMERA STOWAGE.

CONSOLIDATED AIRCRAFT CORP. San Diego, Calif.

OPP. HAND

SPEC. D SIZE

28F5939

R

LET	ALTERATION	DATE	BY

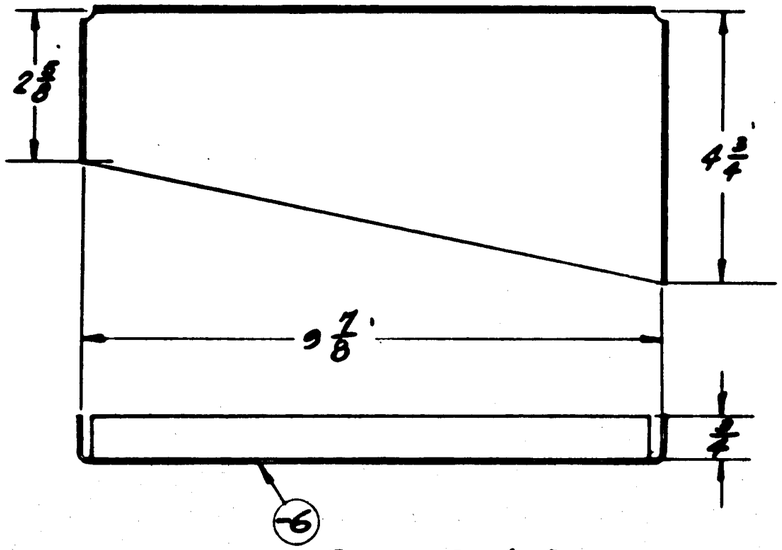

SCALE 6"=1'-0"

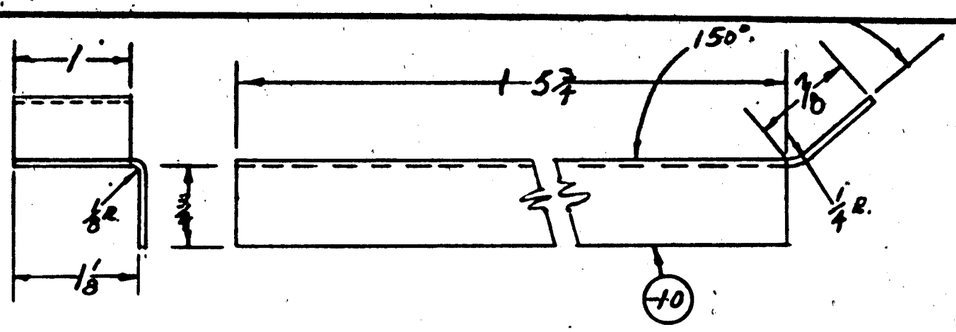

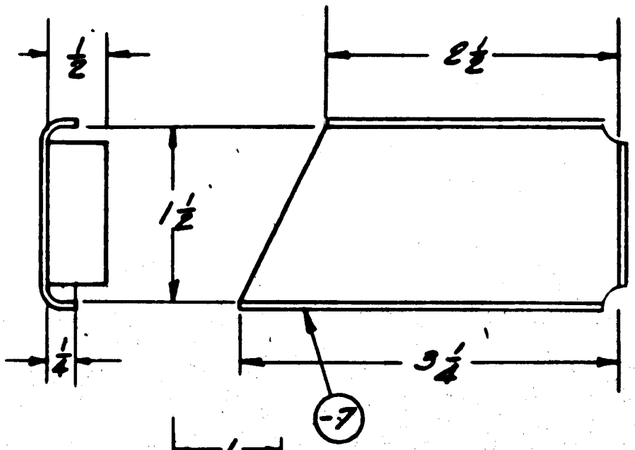

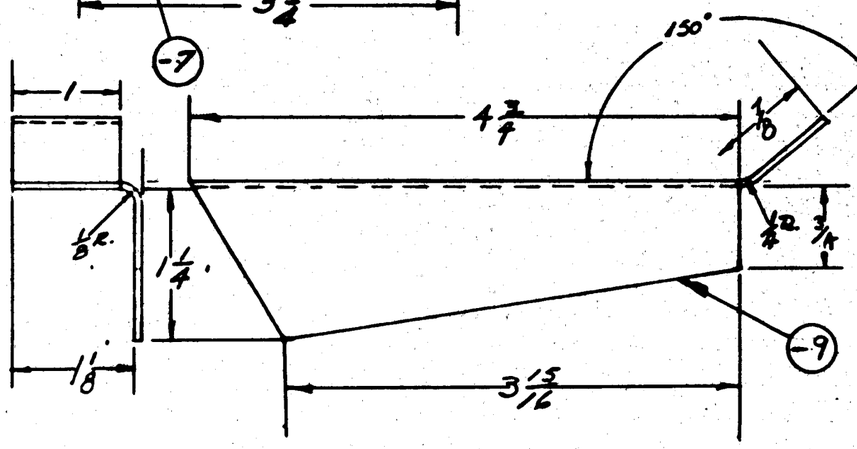

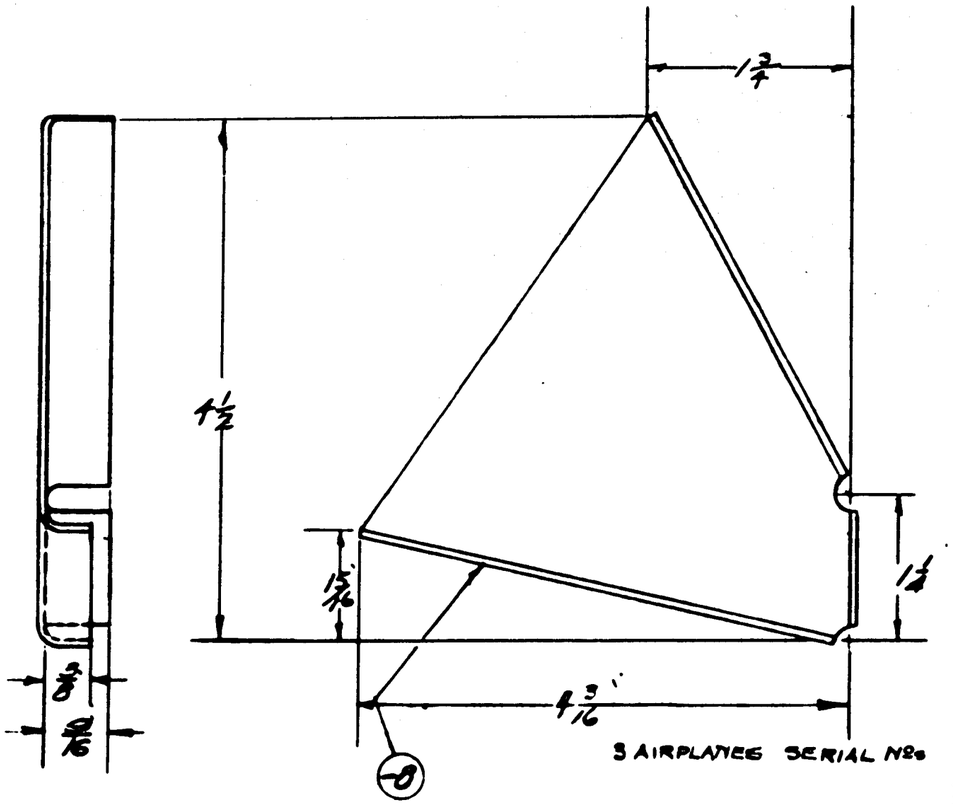

Part No.	Gage	Alt. Wt.
-6	.86	
-7	.03	
-8	.07	
-9	.05	
-10	.05	

3 AIRPLANES SERIAL Nos. 2486
2487
2488

CONTRACT ORDER 70496
CHANGE No. Q-1

BEND RADII 1/8.
RELIEF RADII 1/8.

-10	PBY-5A	28F6023	1
-9	PBY-5A	28F6029	1
-8	PBY-5A	28F6028	1
-7	PBY-5A	28F6027	2
-6	PBY-5A	28F6028	1

ASSEM. BASH No. | MODEL | NEXT ASSY. | REQ.

REQUIREMENTS PER AIRPLANE

REPLACES — NOTED. — SALS. WT.

REPLACED BY — ADV. WT.

LIST OF DIMENSIONS UNLESS OTHERWISE SPECIFIED: ± 1/32 & 1°

SCALE: FULL = 1'-0" / NOTED

STAMP PART NUMBER WHERE SHOWN

PART No.	STOCK	MATERIAL	SPEC.	-0	-2	-3	-4	-5
				LH RH REQ.	LH RH REQ.	LH RH REQ.	LH RH REQ.	LH RH REQ.
-10	.051 x 2 x 6 3/4	ALCLAD	47AB-T					
-9	.051 x 2 1/2 x 5 3/4	ALCLAD	67AB-T					
-8	.081 x 5 x 5 1/4	ALCLAD	67AB-T					
-7	.051 x 2 1/2 x 3 1/8	ALCLAD	47AB-T					
-6	.051 x 5 7/8 x 11 1/8	ALCLAD	67AB-T					

PARTS LIST PER ASSY.

AC

NAVY NONE — 2-P-2AP — 7/3/41

HEAT TREAT | FINISH | DRAFT | CHECK | STRESS | DAY | APPROV. | ENG.

NAME DETAILS - ARM'T. - OBLIQUE CAMERA STOWAGE.

CONSOLIDATED AIRCRAFT CORP. San Diego, Calif.

OPP. HAND

SIZE D

28F5943

E.O. #28971

LET	ALTERATION	DATE	BY
A	ON FACE & B/M AC224-B1 (7) REQ. WAS (6) REQ. AC224-2 (7) REQ. WAS (6) REQ. (SWITCHING NEGD)	3 21 42	[illegible]
B	ADDED NOTE #3 "MATERIAL ---- TYPE 3" IN B/M MATERIAL OF -7 & -8 "8.7 OZ. DUCK SEE NOTE #3" WAS "8.90 OZ/YD ARMY DUCK - COMM'L WT. CHG. NEG. 11-13-42		[illegible]

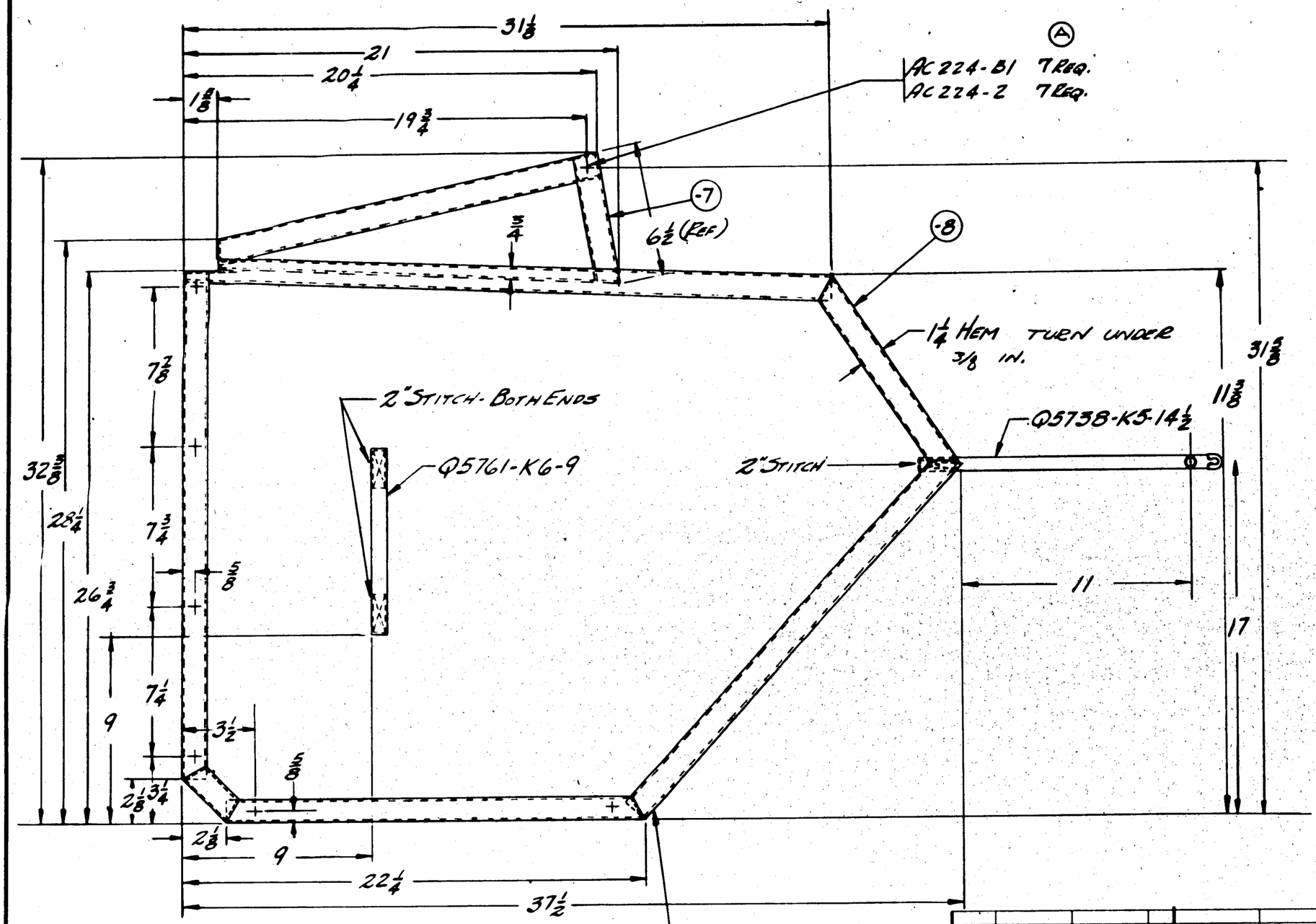

NOTE:

1. THREAD & STITCHING TO CORRESPOND WITH FEDERAL SPEC DDD-S-751
2. DIMS SHOWN DO NOT INCLUDE ALLOWANCE FOR SHRINKAGE OF MAT'L.

(8) 3. MATERIAL FOR -7 & -8: C.A.C. #FAB-2, 8.7 OZ. DUCK, OLIVE DRAB, MILDEW RESISTANT AND WATER REPELLENT, FEDERAL SPEC. CCC-D-771, TYPE 3.

NOTE: THIS DWG. RUSH-RELEASED 5-22-41

ALL DIMENSIONS ARE APPROX.

S.O. No. 936-59 200 PARTS TO BE MADE & SHIPPED
S.O. No. 949-8-134 PARTS TO BE MADE & INSTALLED BY C.A.C.

ASSY. DASH No.	MODEL	NEXT ASSY.	REQ.
-0	PBY-5A	28F5977	1
-0	PBY-5	28F5977	1

REQUIREMENTS PER AIRPLANE

REPLACES — CALC. WT. .60

REPLACED BY — ACT. WT.

LIMIT ON DIMENSIONS UNLESS OTHERWISE SPECIFIED ± 1/16

SCALE 3" = 1'0"

STAMP PART NUMBER WHERE SHOWN

PART No.	STOCK	MATERIAL	SPEC.	LH REQ. -0	RH REQ. -0	LH REQ. -2	RH REQ. -2	LH REQ. -3	RH REQ. -3	LH REQ. -4	RH REQ. -4	LH REQ. -5	RH REQ. -5
	AC224-2				7								
	AC224-B1			7									
	Q5761-K6-9							1					
	Q5738-K5-14 1/2			1									
-8	3 1/2 x 40 1/2	8.7 OZ DUCK	SEE NOTE #3		1								
28F5979-7	9 x 21 1/2	8.7 OZ DUCK	SEE NOTE #3		1								
	-6 SUB ASSY.			1									
-6	SUB ASSY			1									

PARTS LIST PER ASSY.

A.C. NONE		5-20-41				
NAVY		HENNINGS W.J.				
HEAT TREAT	FINISH	DRAFT	CHECK	STRUCT.	MAT'L	APPROV.	ENG

NAME CURTAIN - FURN. - SIDE BLIND FLYING

CONSOLIDATED AIRCRAFT CORP. SAN DIEGO, CALIF.

OPP. HAND

DWG. SIZE D

28F5979

LET	ALTERATION	DATE	BY

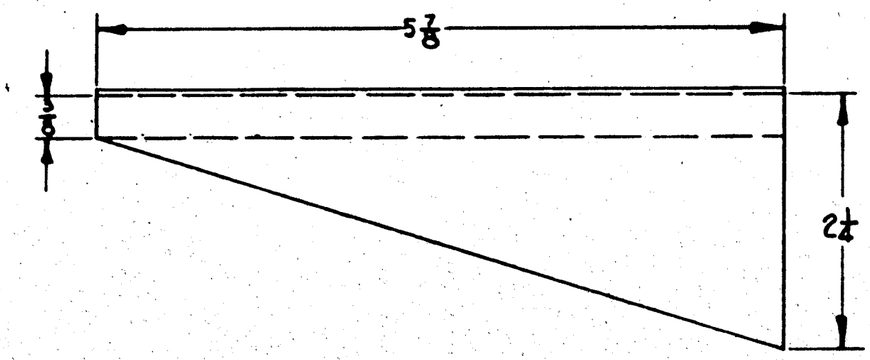

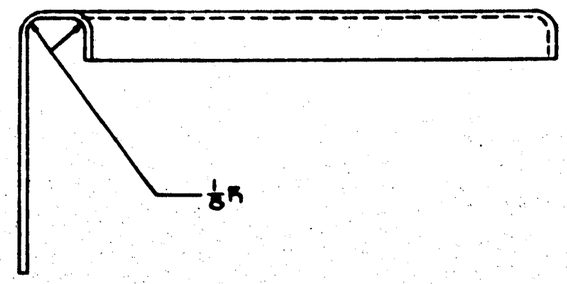

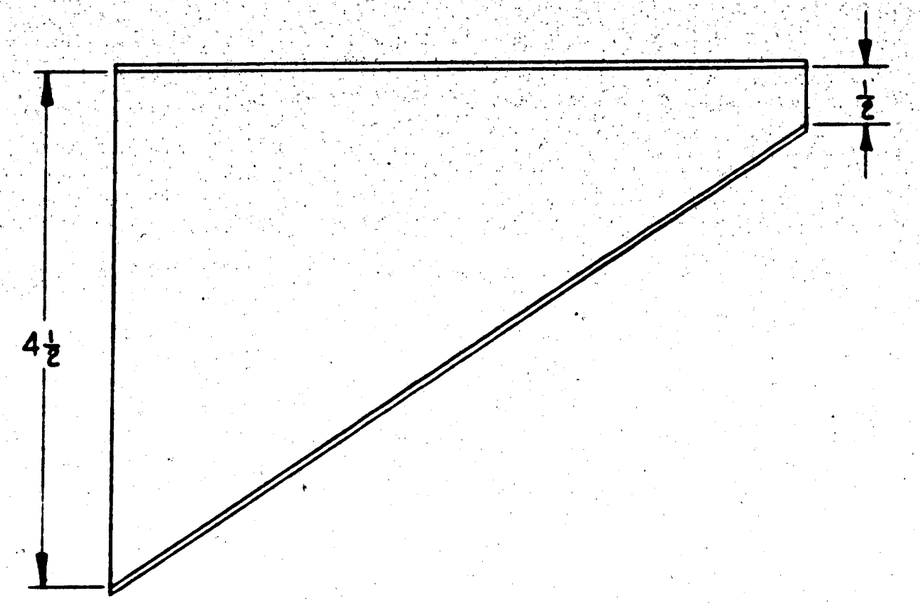

FINISH COL	
Z	ANODIC TREATMENT
P	A-27 PRIMER
AP	ALUMINIZED PRIMER
C	CADMIUM PLATE

ASSY. GAGE No.	MODEL	NAVY ASSY.	REQ.
	PB-2B*K	28F5982	1
	PB-1G	28F5983	1
	PBY-5A	28F5984	1

REQUIREMENTS PER AIRPLANE

REPLACES — .131" GALV. WT.

REPLACED BY — ASY. WT.

UNLESS OTHERWISE SPECIFIED: SCALE 12"=10"

+ 1/32

CHANGE PARTS MARKED THUS (CHANGE)

PART No.	STOCK	MATERIAL	SPEC.	LH REQ.	RH REQ.	LH REQ.	RH REQ.	LH REQ.	RH REQ.	LH REQ.	RH REQ.	LH REQ.	RH REQ.
-0	051 x 6½ x 42 - BPC	24ST ALC. SHT.	4788 COND. T	1									
PARTS LIST PER ASSY.				-0		-2		-3		-4		-5	

AC 6R-53	Z-8P	ORIGIN						
NAVY		7-1-40						
HEAT TREAT	FINISH	DRAFT	CHECK	STRUCT	MAT	APPROV	ENG.	

NAME BRACKET-FURN'S.-SUPPORT MISC. TOOL & GEAR LOCKER

OPP. HAND

CONSOLIDATED AIRCRAFT CORP. San Diego, Calif.

SIZE D — 28F5981

R

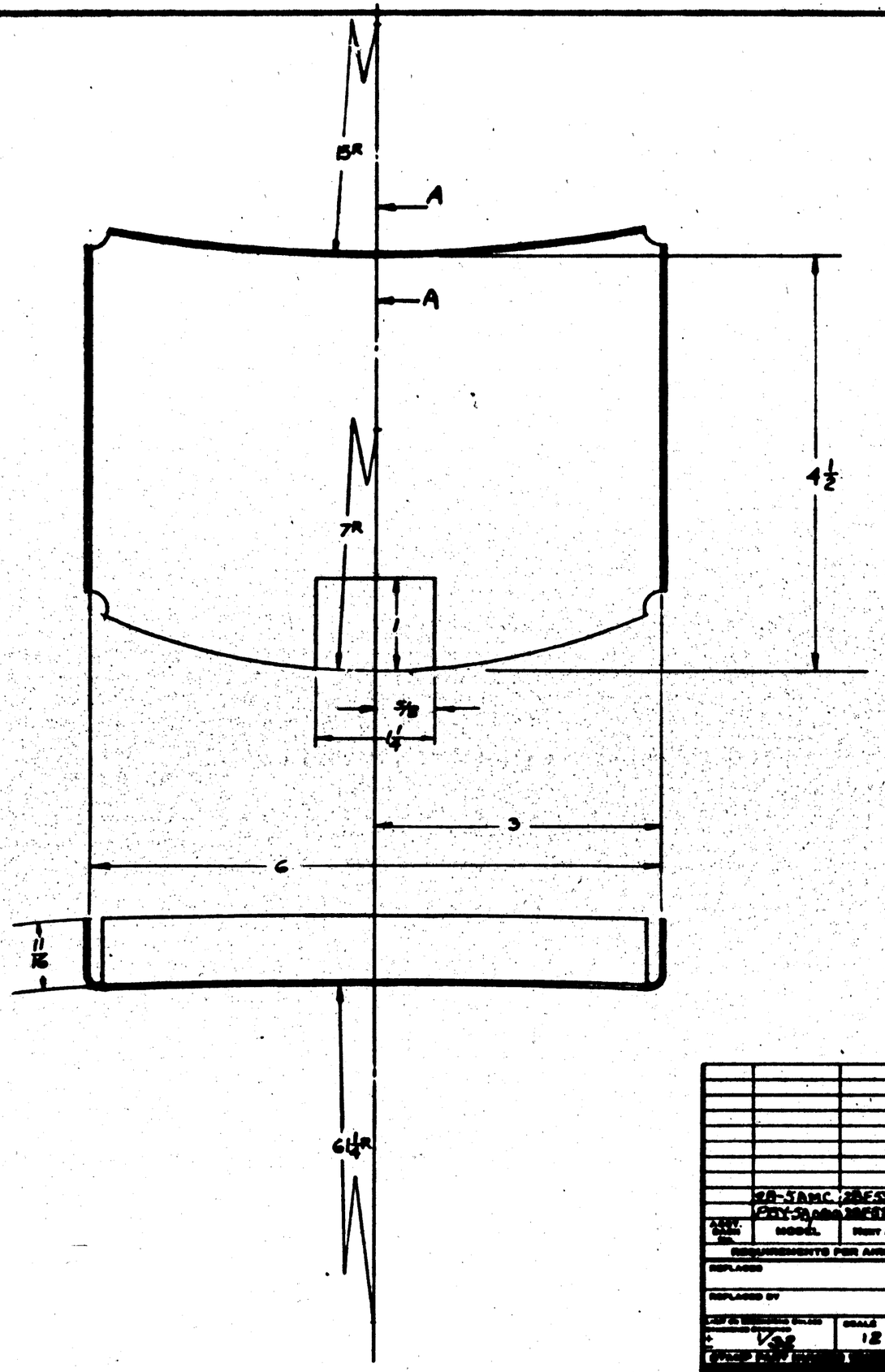

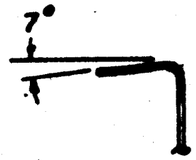

SECTION A-A

NO.	REVISIONS	DATE	BY

ALL BEND RADII 1/8
ALL RELIEF RADII 3/16

FINISH CODE	
Z	ANODIC TREATMENT
P	P-17 PRIMER
AP	ALUMINIZED PRIMER
C	CADMIUM PLATE

ASSY. CODE NO.	MODEL	NEXT ASSY.	QTY.
	28-5AMC-28F590-0 1		
	28V-5AMC-28F590-0 1		

REQUIREMENTS PER AIRPLANE

REPLACES ./9 CODE IDENT. NO.

REPLACED BY ASSY. IDENT. NO.

SCALE 12"=1-0

PART NO.	STOCK	MATERIAL	SPEC.	-0	-2	-3	-4	-5
	28R7 R	AL. ALL.	17ST SHEET					

PARTS LIST PER ASSY.

AC
NAVY AN-53 + | K-P-ZAP | 24 HR
HEAT TREAT | FINISH | DRAFT

NAME BRACKET-FURNS. MECH. SEAT

CONSOLIDATED AIRCRAFT CORP. SAN DIEGO, CALIF.

OPP. HAND ADAMC

SIZE D

28F590

R

LET	ALTERATION	DATE	BY
A	[illegible]		

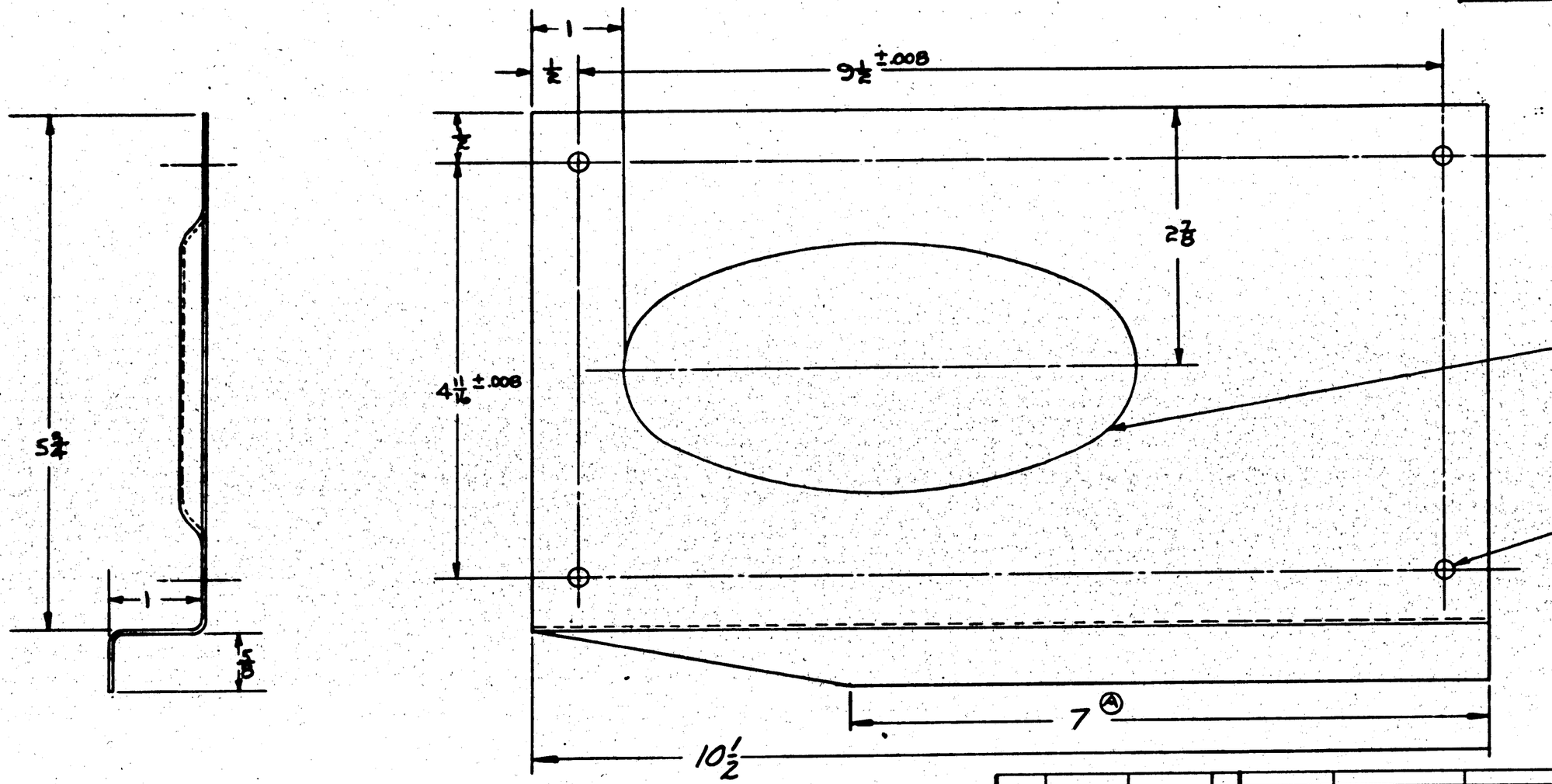

GP-GREEN PRIME

FINISH CODE	
Z	ANODIC TREATMENT
P	P-37 PRIMER
AP	ALUMINIZED PRIMER
C	CADMIUM PLATE

CONTR. 70496
77715
#1-52 88476
#1 TO 52

TEST DASH No.	MODEL	NEXT ASSY.	REQ.
	28-5-AMC	28F6011	1
	08-10	28F6011	1
	PBY-5A	28F6011	1

REQUIREMENTS PER AIRPLANE

REPLACES — 0.20 GALS. WT.

REPLACED BY — ASY. WT.

SCALE FULL

STAMP PART NUMBER WHERE SHOWN

PART No.	STOCK	MATERIAL	SPEC.	LH REQ. -0	RH REQ. -2	LH REQ. -3	RH REQ. -4	LH REQ. -5	RH REQ.
PARTS LIST PER ASSY.									

.040 X 10½ X 15½ ALCLAD 24S-T4 (Spec. A)

AC
NAVY NONE
HEAT TREAT — ZP 2 — FINISH

DRAFT | CHECK | STRUCT. | MAT | APPROV. | ENG.

NAME BRACKET-FURNS.-ENGINE FIRE EXTIN.-CO_2 CYLINDER

CONSOLIDATED AIRCRAFT CORP. San Diego, Calif.

OPP. HAND

SIZE D — 28F6013

R

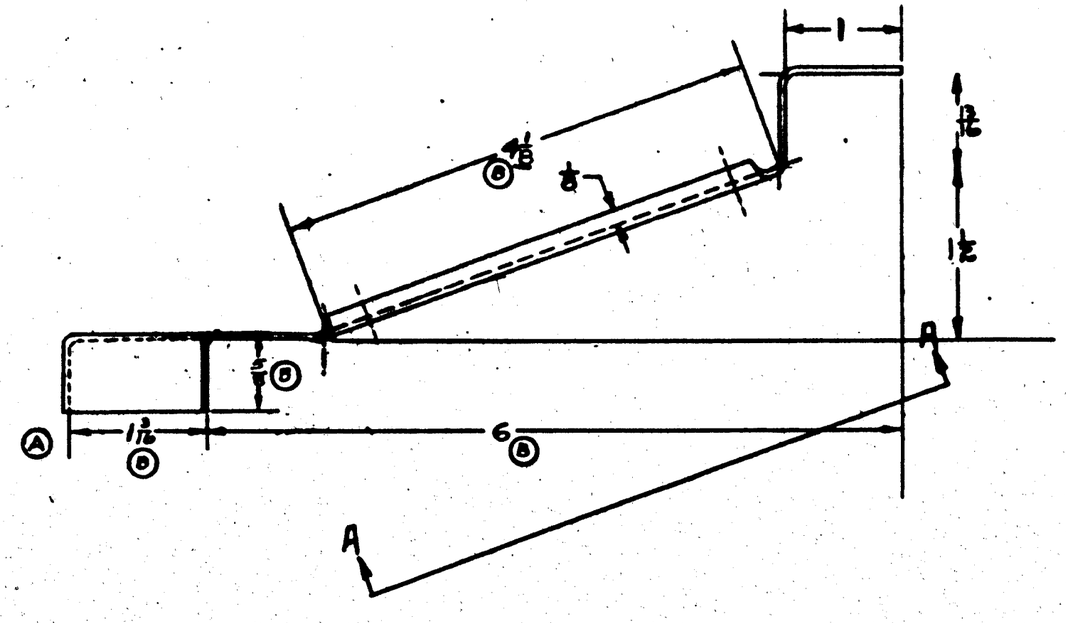

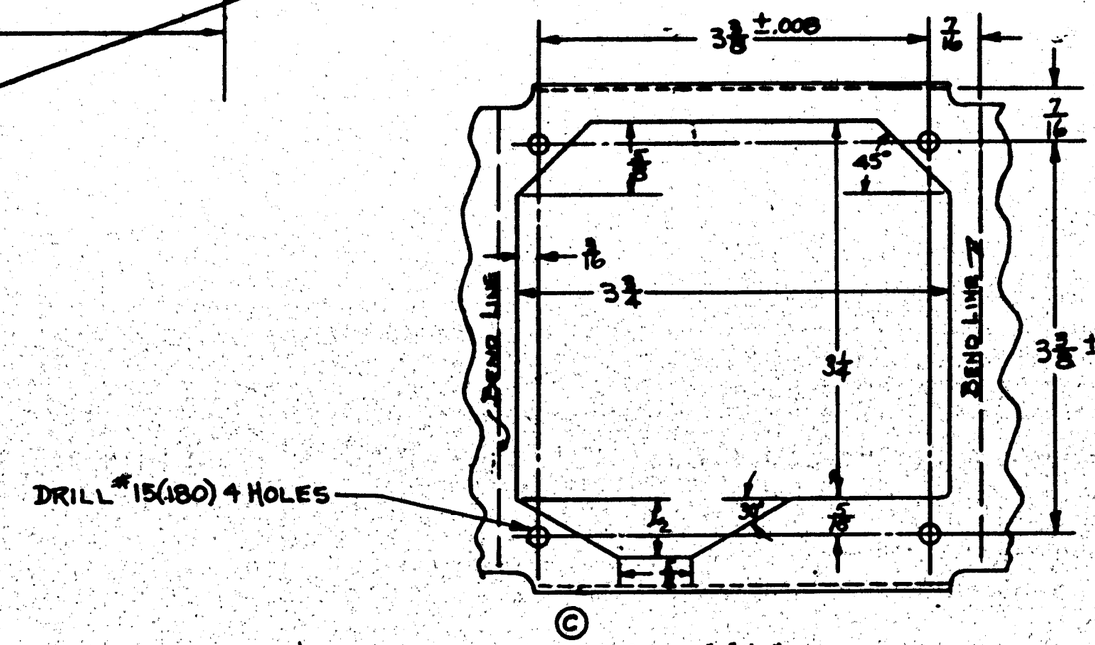

VIEW "A-A"

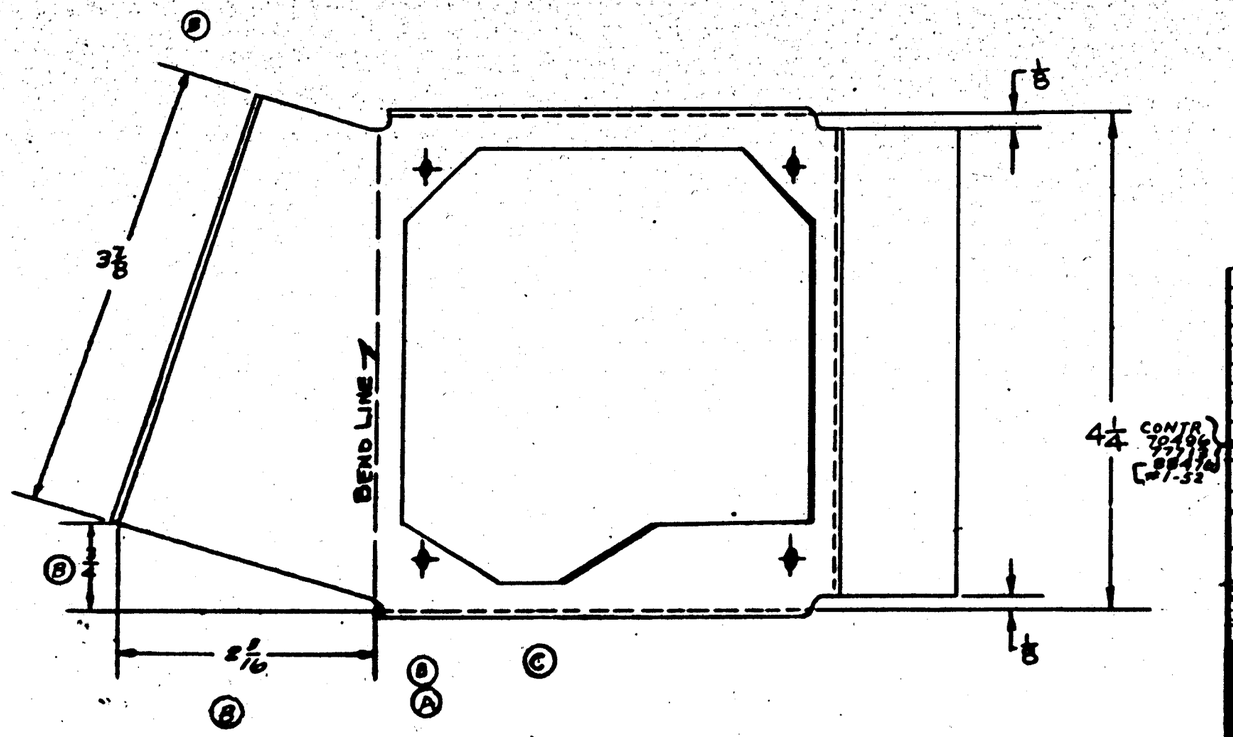

ALL BEND & RELIEF RADII — 1/8

GP-GREEN PRIME

FINISH CODE	
Z	ANODIC TREATMENT
P	P-17 PRIMER
AP	ALUMINIZED PRIMER
C	CADMIUM PLATE

ASSY. DASH NO.	MODEL	NEXT ASSY.	REQ.
	28-5AMN	28F6011	1
	28-5AMC	28F6011	1
	PRY-5A	28F6011	1

REQUIREMENTS PER AIRPLANE

REPLACES — 0.80 CALC. WT.

REPLACED BY — ACT. WT.

SCALE FULL

STAMP PART NUMBER WHERE SHOWN

PART NO.	STOCK	MATERIAL	SPEC.	LH REQ. -0	RH REQ. -2	LH REQ. -3	RH REQ. -4	LH REQ. -5	RH REQ. -6
PARTS LIST PER ASSY.									

AC

NAVY NAME — ZP2 [redacted] GP — HEAT TREAT — FINISH

DRAFT — CHECK — STRUCT. — WAT — APPROV. — ENG.

NAME BRACKET-FURNS.-ENGINE FIRE EXTING.-CONTROL PANEL

CONSOLIDATED AIRCRAFT CORP. SAN DIEGO, CALIF.

OPP. HAND

SIZE D — 28F6014

LET	ALTERATION	DATE	BY
A	[illegible]	[illegible]	[illegible]
	[illegible]		
	[illegible]		
B.	-30 REQ. WAS (2) REQ. (Ea)	3-3-42	Non-Metallic
	NO WT. CHANGE.		

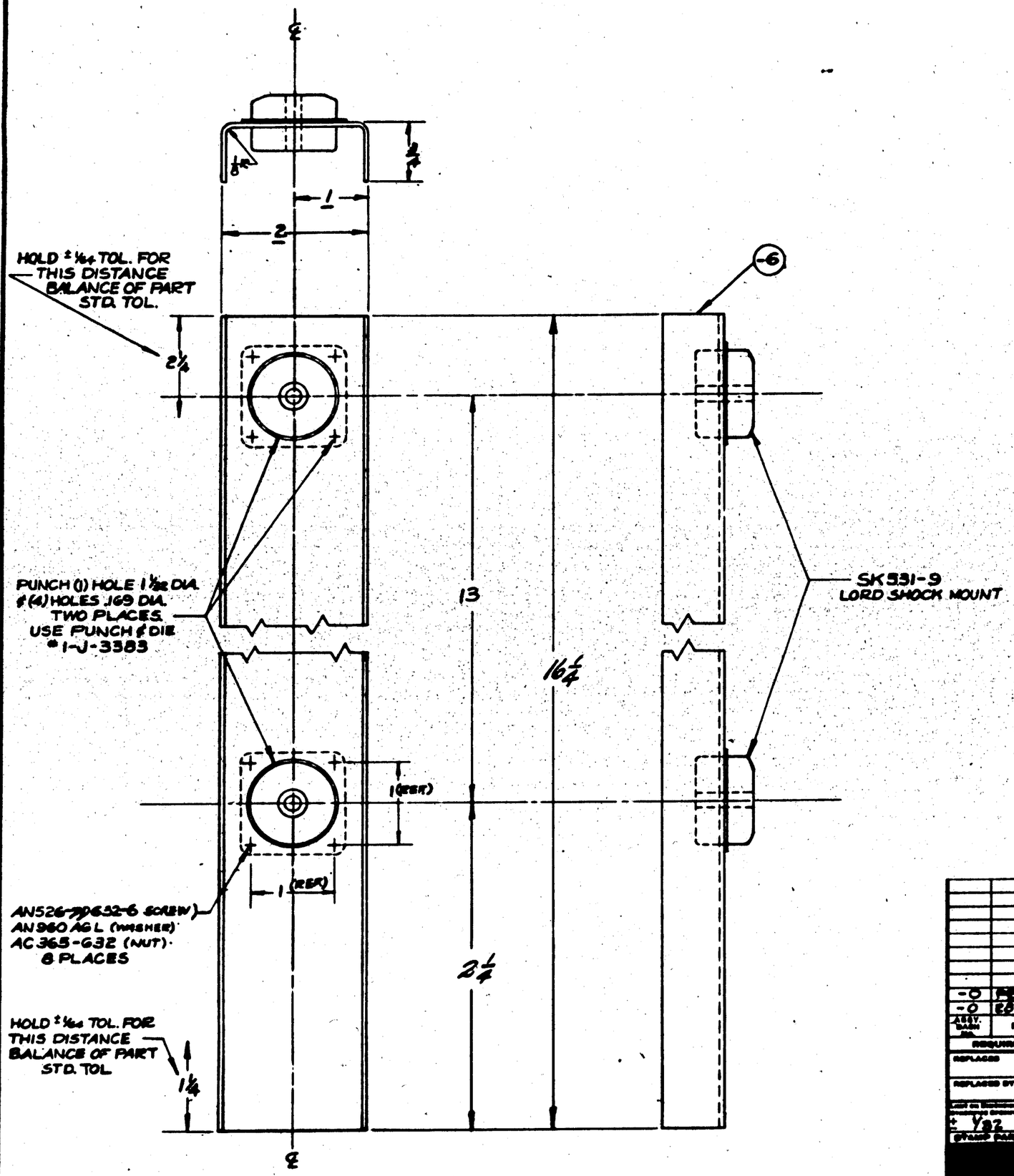

FINISH CO	
Z	ANODIC TREATM
P	P-27 PRIMER
AP	ALUMINIZED PR
C	CADMIUM PLAT

ASSY. DASH NO.	MODEL	NEXT ASSY.	REQ.
-0	PBV-5A	28F6044	2
-0	CO-SANC	28F6045	2

REQUIREMENTS PER AIRPLANE

REPLACES — .29 Grams Wt.

REPLACED BY — Assy. Wt.

SCALE 12" = 1'0"

SK531-9 LORD SHOCK MOUNT (12°) — 2

AN960AGL — A
AC 365-632 — A
-6 — B

PART No.	STOCK	MATERIAL	SPEC.	LH REQ.	RH REQ.	LH REQ.	RH REQ.	LH REQ.	RH REQ.
				-0	-2	-3	-4		
-0	[illegible]	ALCLAD	47AD T	1					

PARTS LIST PER ASSY.

AC		LABOR						
NAVY	EP AP	J-30				JER		
HEAT TREAT	FINISH	DRAFT	CHECK	STRUCT	MAT	APPROV	ENG.	

NAME SHOCK MOUNT CHANNEL-FURN.
S.W. HEATING SYSTEM

OPP. HAND

CONSOLIDATED AIRCRAFT CORP. San Diego, Calif.

DWG. SIZE D — 28F6042

R

LET	ALTERATION	CHKD	APP'D
A	[illegible]	[illegible]	[illegible]
	[illegible]	4	[illegible]
	[illegible]	4	[illegible]
	[illegible]	4	[illegible]
	[illegible]	4	[illegible]
B	ADDED DETAIL-7-AC-84 SECTION A-A CLEARED E.O. UNCLASSIFIED [illegible]		
	[illegible]		
C	CHANGED (2) [illegible]		
	[illegible]		
D	AT SECT. B-B ADDED DIM. [illegible] (NO WT. CHG.)		
E	REPLACED -10 WITH -21 ON [illegible] (NO WT. CHG.)		

E.O. A13474 PER ECN 25-3MC

E.O. A18751 D6

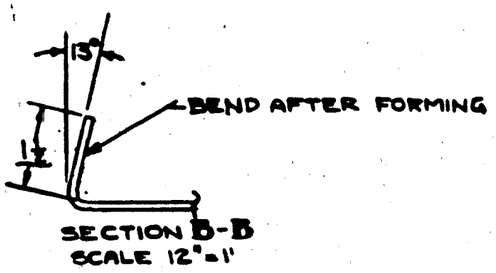

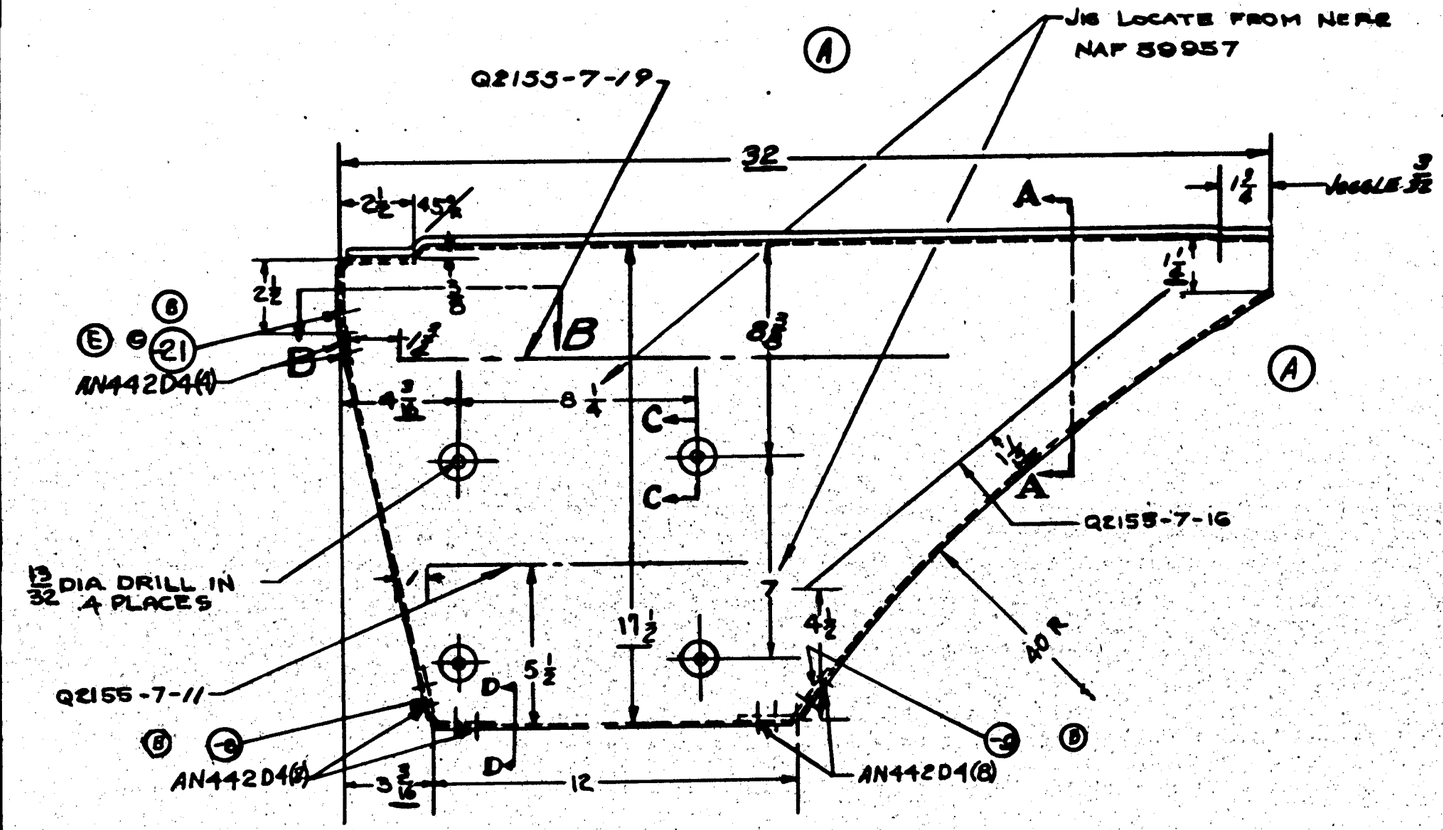

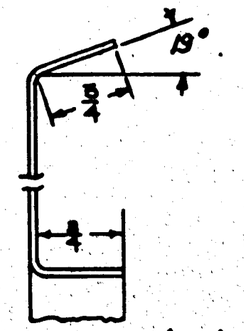

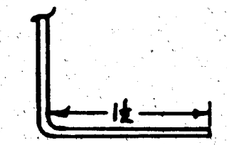

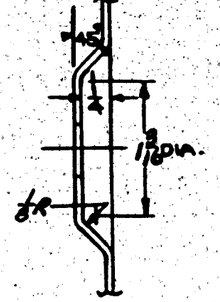

FINISH COD	
Z	ANODIC TREATMENT
P	P-27 PRIMER
AP	ALUMINIZED PRIMER
C	CADMIUM PLATE

NOTE
ALL FORM RADII TO BE ⅛
ALL BEND RELIEF RADII TO BE 3/16

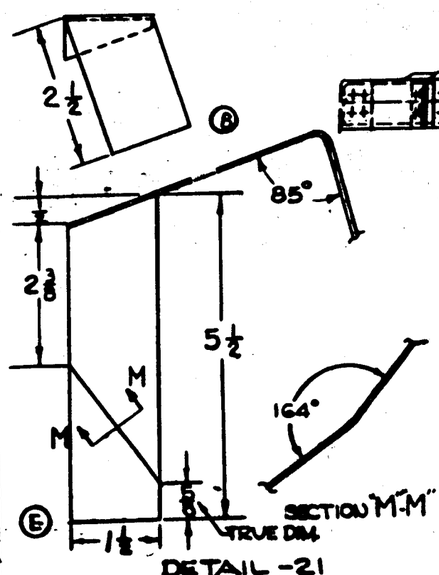

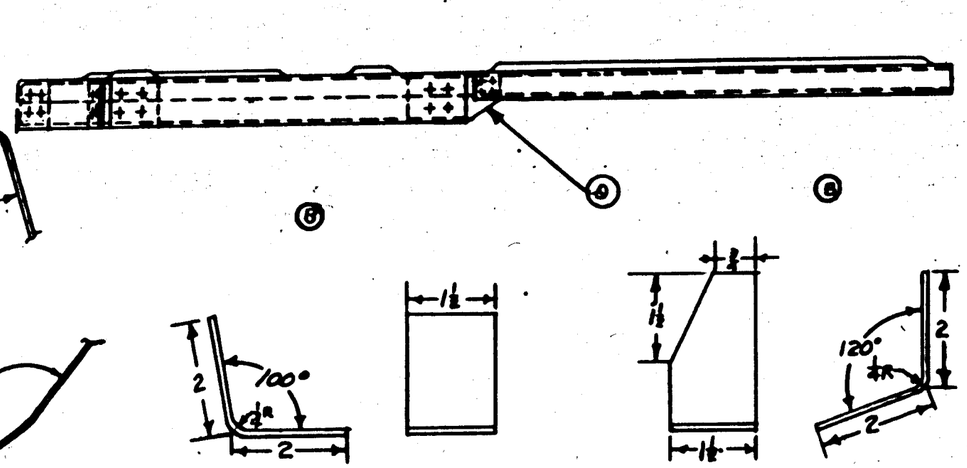

AN442D4

ASSY. DASH No.	MODEL	NEXT ASSY.	QUAN.
-0	PBY-5A	[illegible]	1
-0	28 RAMP	[illegible]	1
-0	28-5AMC	[illegible]	1

REQUIREMENTS PER AIRPLANE

REPLACES
REPLACED BY
2.09 CALC. WT.
ACT. WT.
SCALE 3"=1'-4
NOTED
± 1/32 ± 1/2°
STAMP PART NUMBER WHERE SHOWN

PART No.	STOCK	MATERIAL	SPEC.	LH REQ	RH REQ	LH REQ	RH REQ	LH REQ	RH REQ	LH REQ	RH REQ	LH REQ	RH REQ
-21	.064 x 2 x A	ALCLAD	47AB-T	1									
-0	.064 x [illegible] x 4½	ALCLAD	47BB-T	1									
-0	.064 x [illegible] x 4½	ALCLAD	47BB-T		1								
-4	.064 x 2 x 3⅜	ALCLAD	47AB-A					1					

PARTS LIST PER ASSY.

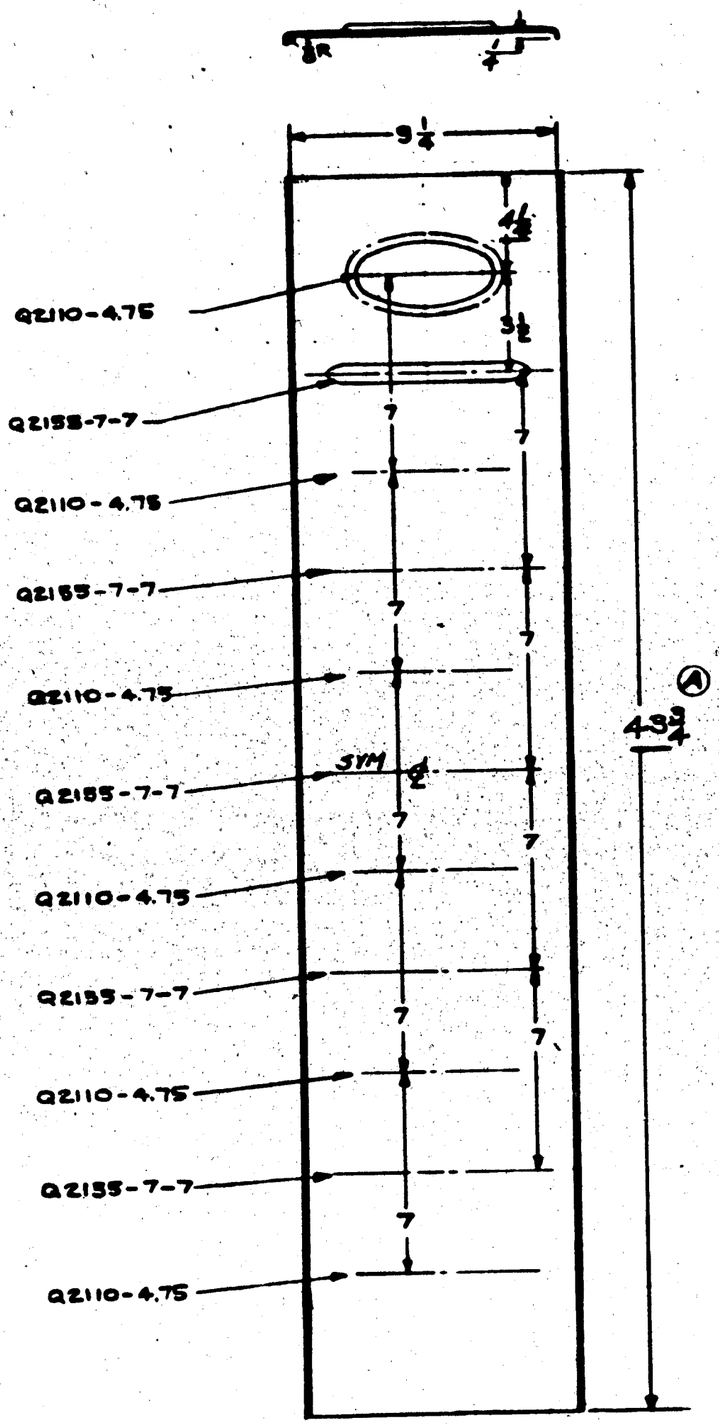

LTR	REVISION	DATE	APPROVED
A	ON EACH DWG AS REQUIRED		

FINISH CODE	
Z	ANODIC TREATMENT
P	P-7 PRIMER
AP	ALUMINIZED PRIMER
C	CADMIUM PLATE

PART NO.	STOCK	MATERIAL	SPEC.	LH REQ.	RH REQ.	LH REQ.	RH REQ.	LH REQ.	RH REQ.	LH REQ.	RH REQ.
-0	PURCH.			1							
-0	02-10			1							
-0	05-5[illegible]			1							
-3	.051 x 10½ x 46	ALCLAD	47A8-A			1					
PARTS LIST PER ASSY.				-0	-2	-3	-4	-5			

REQUIREMENTS PER AIRPLANE	
REPLACED	1.98 Grad. Wt.
REPLACED BY	Adv. Wt.
SCALE	3" = 1'-0"

AC						
NAVY 58-SB-T	ZYAP					
HEAT TREAT	FINISH	DRAFT	CHECK	STRUCT.	MAT.	APPROV.	ENG.
		1-10-41	BELLIS		1-23-41	KLEIN	

NAME FRONT SUPPORT AUX. POWER PLANT

OPP. HAND NONE

CONSOLIDATED AIRCRAFT CORP. SAN DIEGO, CALIF.

SIZE D

28F6049

R

LET	ALTERATION	ZONE	BY
A	CHG. REQ'D: [illegible]		
	WAS [illegible]		
	WAS [illegible]		
	ADD -6 CHANGE		
B	REVISED CUTOUT ARRANGE. DET. [illegible] ADD [illegible] & ACCESSORIES		
	WAS DET. A ADDED PLATE		
C	CORRECTED POSITION OF F -9 AS SHOWN		
D	17 1/2 WAS 18 1/16, 3 9/16 WAS 3 13/16, 5 1/4 WAS 5 5/16, 3 1/2 WAS 3 5/8, 10 Z/16 WAS 10 1/8, ADDED 61°		
	ADD -7 CHG.		
E	ADDED NOTE: "CUTOUT - [illegible]"		
	CUTOUT, [illegible]		
	WAS -7 R - 7 WAS -7 [illegible]		
F	REVISED NOTE "[illegible] ONLY", DIMS. [illegible]		
	CHG'D -10 TO -7 R & -7 TO -7L. ADDED [illegible]		

EDC 19027

EO A14669

EO A491206

DETAIL "C"
SCALE 12"=1'

SECTION A-A
SCALE 1"=1'

DETAIL "B"
SCALE 12"=1'

92153-7
3 BEADS 4, 3, 2½ LONG

NOTE -
ALL FORM RADII TO BE 1/8

-6 SUB ASSEM. SHOWN.
-9 SUB ASSEM. SAME EXCEPT USE -7R IN PLACE OF -7L

FINISH CODE	
Z	ANODIC TREATMENT
P	P-27 PRIMER
AP	ALUMINIZED PRIMER
C	CADMIUM PLATE

ASSY. DASH NO.	MODEL	NEXT ASSY	REQ
-9	PBY-5A	28F6047	1
-6	PBY-5A		1
-9	28-5AMN		1
-6	28-5AMN		1
-9	28-5AMC	28F6047	1
-6	28-5AMC	28F6047	1

REQUIREMENTS PER AIRPLANE

REPLACES 1.70 Cy c 47.

REPLACED BY Act. 127

SCALE 3"=1' & NOTED

STAMP PART NUMBER WHERE SHOWN

PART No.	STOCK	MATERIAL	SPEC.	LH REQ.	RH REQ.	LH REQ.	RH REQ.	LH REQ.	RH REQ.	LH REQ.	RH REQ.	LH REQ.	RH REQ.
	PARTS LIST PER ASSY.			-0		-3		-3		-4		-5	
-10	.051 x 15 x 49	ALCLAD	47AB-A	1									
-3	.051 x 6½ x 7	ALCLAD	47AB-T	1									
-5	SUB-ASSY.			1									
-8	.051 x 6½ x 7	ALCLAD	47AB-T			1							
-10	.051 x 15 x 49	ALCLAD	47AB-A			1							
-4	SUB-ASSY.					1							
-7	.051 x 6½ x 7	ALCLAD	47AB-T					1					
-10	.051 x 15 x 49	ALCLAD	47AB-A					1					
-5	SUB-ASSY.							1					

AC —	—	DRAWING	BATES Kline Gw
NAVY SR53-T	Z-P-AP	1-28-41	4041
HEAT TREAT	FINISH	DRAFT	CHECK STRUCT. HEAT APPROV. ENG.

NAME SUPPORT - FURNS. AUX POWER PLANT

CONSOLIDATED AIRCRAFT CORP. San Diego, Calif.

OPP. HAND NONE

DWG. D SIZE 28F6050

E.O. A-13014

LET	REVISIONS	DATE	BY
A	-10 [illegible]		
	ADDED [illegible]		
	-7L, -7R [illegible]		
	-8 [illegible]		
	BRUSH CEMENT TO -7 WITH EAGLE BRAND CEMENT		
	REMOVED NOTE ANA430D4 EQUAL ARE'S THRU -7		
	-8 1/8" IN DIA ADDED DIM		
	CLAIMED RUBBER CEMENT (PLASTIKON #169 OR EQUIV.)		
	SYN RUBBER EM048 TYPE II GR. A OR EQUIV. CEMENT TO -8 WITH RECLAIMED RUBBER CEMENT (PLASTIKON #169 OR EQUIV.)		
	REMOVED ANA430D4 RIVETS		
	WT. CHG. NEG. [illegible]		

SECTION "A-A"
FULL SIZE

DRILL 7/32 (.219) 4-PLACES
W.L. 66 5/16

AN442D4 RIVETS (REF.)

CEMENT 1/16R x 1/8

(-8) CRADLE

(-7) 1/8 SUPPORT

(6) SPOTWELD -8 TO -7 1/2 SPACING.

(-10) (A) SYN. RUBBER EM048 TYPE II GR. A OR EQUIV. CEMENT TO -8 WITH RECLAIMED RUBBER CEMENT (PLASTIKON #169 OR EQUIV.)

2885558 (REF.)

NOTE: FINISH - 7L, - 7R, AND - 8 Z-P-AP

FINISH CODE

Z	ANODIC TREATMENT
P	P-27 PRIMER
AP	ALUMINIZED PRIMER
C	CADMIUM PLATE

RECLAIMED RUBBER CEMENT (PLASTIKON #169 OR EQUIV.)

PART No.	STOCK	MATERIAL	SPEC.	LH REQ. -0	RH REQ. -2	LH REQ. -3	RH REQ. -4	LH REQ. -5	RH REQ.
-10	.125 x 1/8 x 6 3/4	SYN RUBBER EM048 TYPE II GR. A							
-8	.050 x 7/8 x 10 1/2	ALCLAD	4788-T	1					
-7R	.051 x 10 x 18	"	4788-A		1				
-7L	.051 x 10 x 18	"	4788-A			1			

PARTS LIST PER ASSY.

ASSY-SA			
28-6 MFG	2885558	1	
ASSY. SERIAL No.	MODEL	NEXT ASSY.	REQ.

REQUIREMENTS PER AIRPLANE

REPLACED	.884 ORIG. QTY.
REPLACED BY	ADV. QTY.

SCALE 6" - 1"

+ 1/32

A C			
NAVY SR-53-T	NOTED	2-19-41	2-22-41
HEAT TREAT	FINISH	DRAFT	MAT'L APPROV.

NAME CRADLE-FURN.-A.P.U.-OIL TANK

CONSOLIDATED AIRCRAFT CORP. San Diego, Calif.

OPP. HAND

SIZE D

28F6051

LET	ALTERATION	DATE	BY
	EO #33854 EO #A1084		
A	CREATED -06-2 ASSY.		
	NEG WT. CHG.	6-8-42	SEERY
B	FINISH "NONE" WAS "R-P-AA"		
	NO WT. CHG.	6-8-42	SEERY

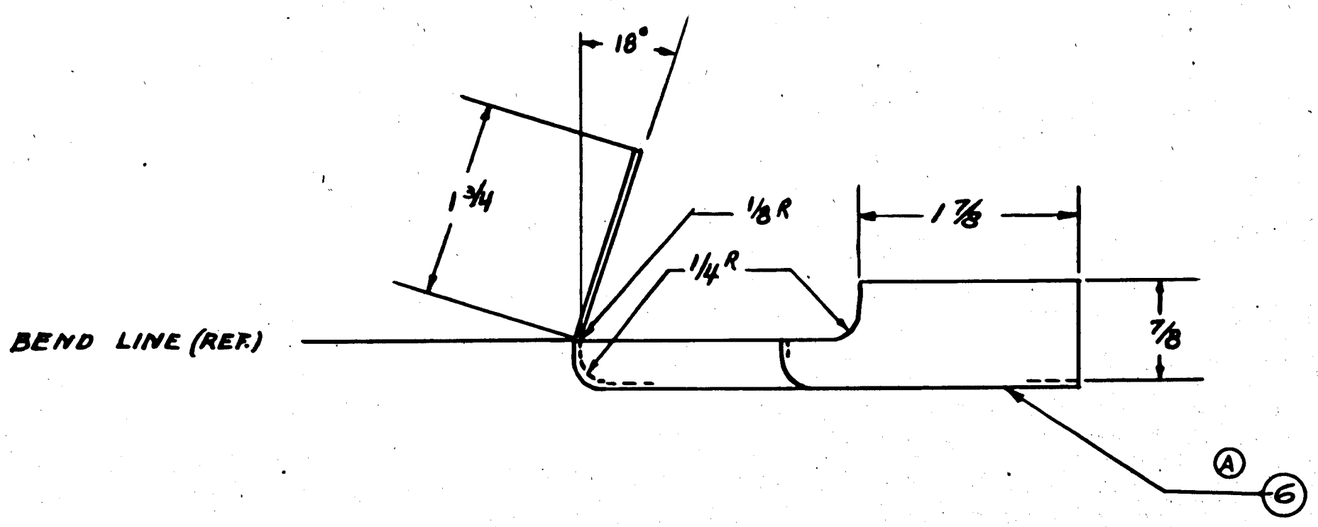

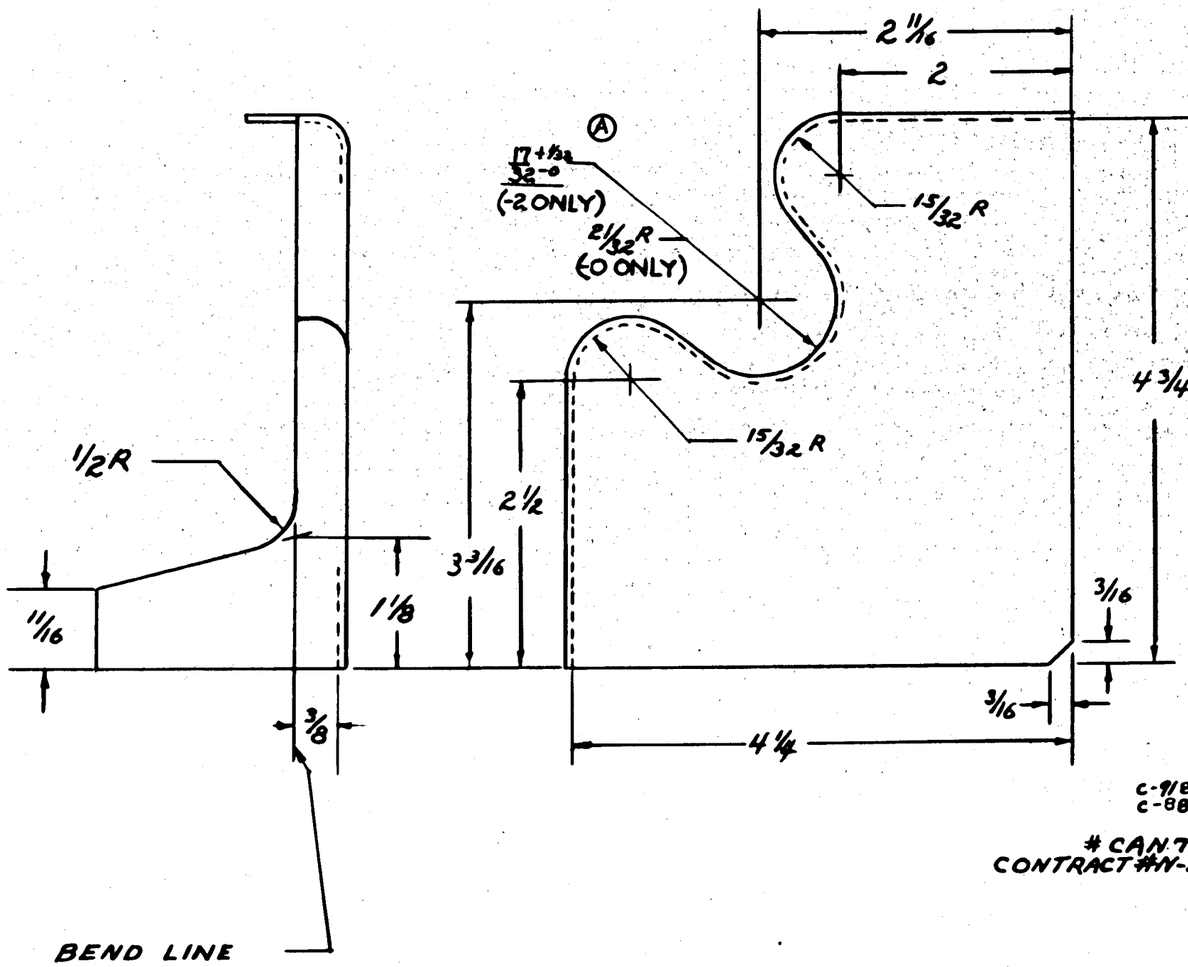

ASSY. DASH NO.	MODEL	NEXT ASSY.	REQ
-2	PBY-5A	28F6920	1
	28-5AMN	28F6066	1
-2	PBY-5	28F6066	1
-2	PBY-5B	28F6066	1
	28-5AMC	28F6114	1
	28-5MC	28F6066	1
	28-5MN	28F6066	1

C-9876
C-88477
CAN 78
CONTRACT #N-36-

REQUIREMENTS PER AIRPLANE

REPLACES .15 CALC. WT.

REPLACED BY ACT. WT.

LIGHT OR SHOWDOWS UNLESS OTHERWISE SPECIFIED + 1/32 - 1/2°

SCALE 12" = 1'-0"

STAMP PART NUMBER WHERE SHOWN

-6 .064 X 10 1/2 X 10 ALC. SHT. 47AB-A

PART NO	STOCK	MATERIAL	SPEC.	LH RH REQ.	LH RH REQ.	LH RH REQ.	LH RH REQ.	LH RH REQ.
PARTS LIST PER ASSY.				-0	-2	-3	-4	-5

A.C. SHARD Eng. BMJ

A.C.		4-18-42	4-21-42			
NAVY SR-53	NONE	DRAFT	CHECK	STRUCT.	MAT	APPROV. ENG.
HEAT TREAT	FINISH					

NAME SOCKET - ARMT. - .303 CAL. BOW GUN STOWAGE

OPP. HAND ~

DWG. SIZE D

28F6112

CONSOLIDATED AIRCRAFT CORP. SAN DIEGO, CALIF.

R

LET	ALTERATION	DATE	BY
A	ADDED 1¼ DIA HOLE & MISCEL. DIMS	10-24-41	[illegible]
B	-7 L/R WAS -7 ON FACE AND IN B/M.	10-24-41	[illegible]
C	CREATED -2 ASSY. ADDED 28F6319 L/ANGLE (TO -2 ASSY) & LOCATING DIMS. ADDED PBY-5, -5A REQMTS.	1-6-42	[illegible]

EDC 7458
EDA13851
28-5 MC, AMC, MN
AMN

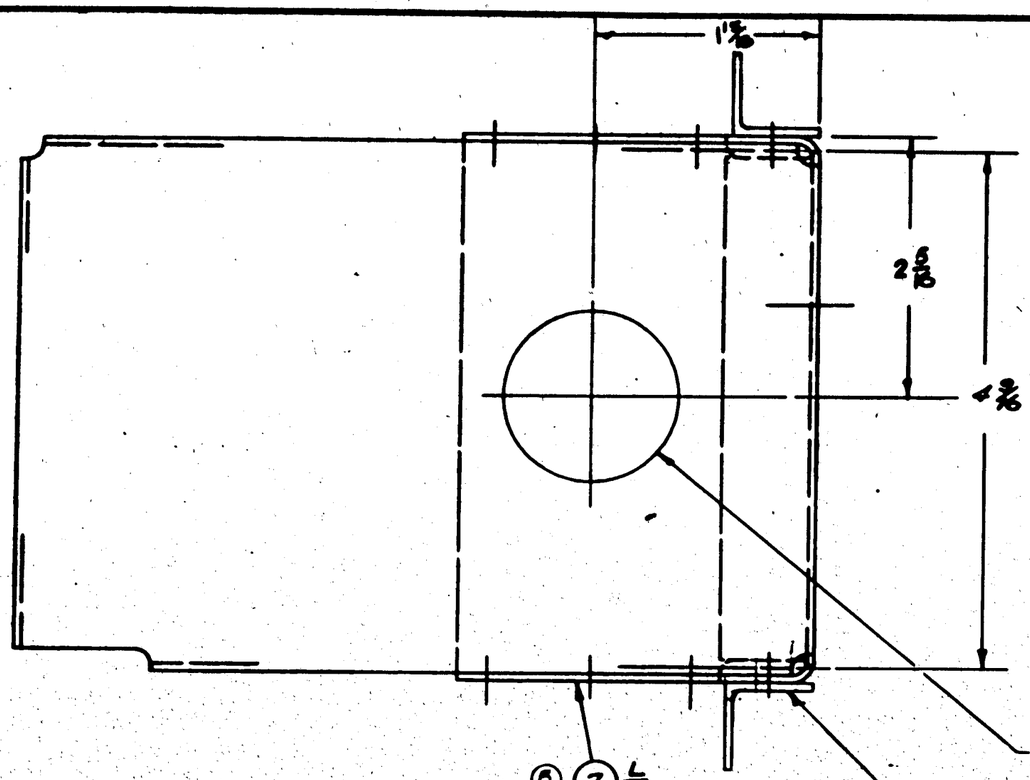

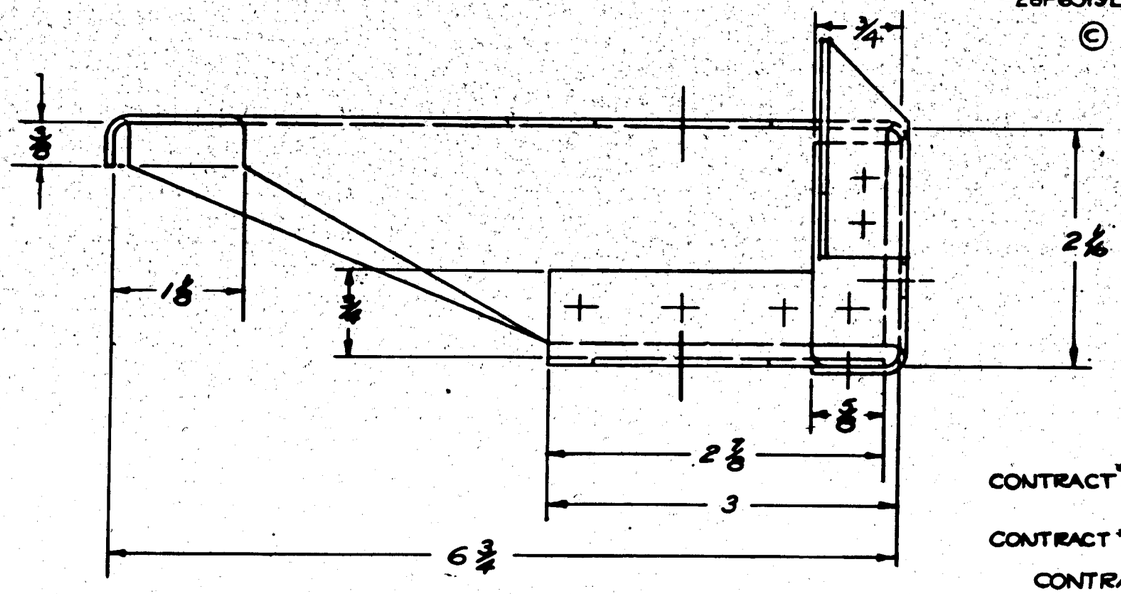

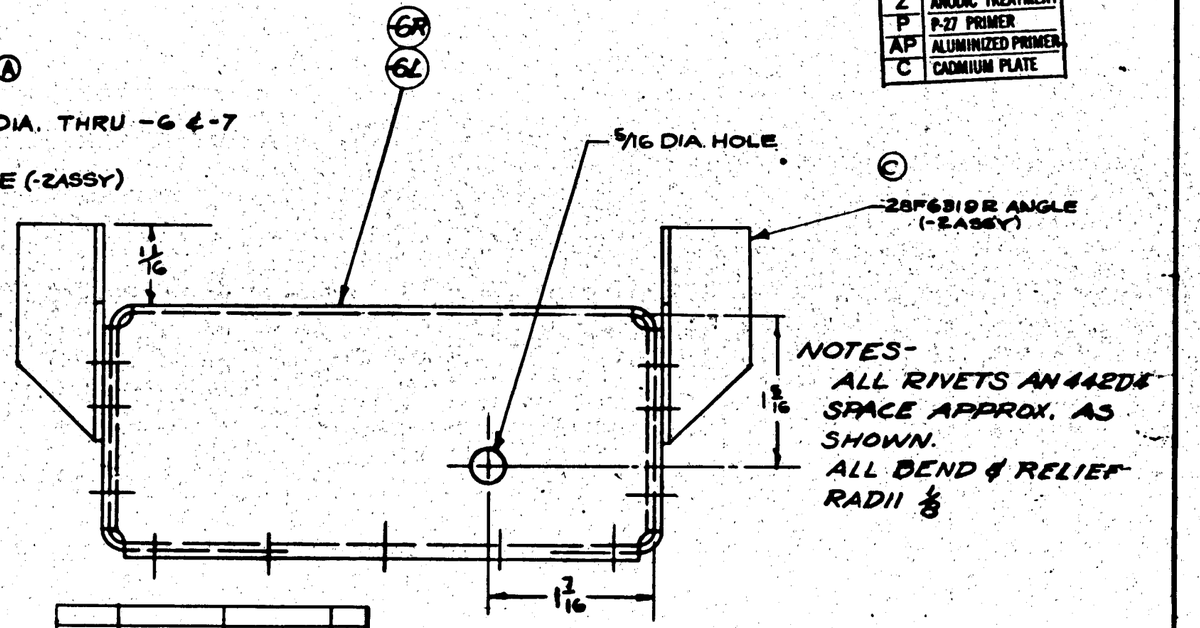

NOTES-
ALL RIVETS AN442D4 SPACE APPROX. AS SHOWN.
ALL BEND & RELIEF RADII ⅛

FINISH CODE	
Z	ANODIC TREATMENT
P	P-27 PRIMER
AP	ALUMINIZED PRIMER
C	CADMIUM PLATE

CONTRACT #91876 → -0L PBY-5 28F6130
-2 2B-5AMN
CONTRACT #88476 → -2 PBY-5A
2B-5AMN
PBY-5A
CONTRACT #91876 → -0R PBY-5
-0L 2B-5AMN 28F6130
2B-5AMC
2B-5MC
2B-5MN
2B-5AMC
2B-5MC 28F6130
CONTRACT #N-36
CAN.-78

ASSY. DASH NO.	MODEL	NEXT ASSY.	REQ.
REQUIREMENTS PER AIRPLANE			
REPLACES		CALC. WT.	0.61
REPLACED BY		ADV. WT.	
UNLESS OTHERWISE SPECIFIED ± 1/32	SCALE 12"=1'0"		
STAMP PART NUMBER WHERE SHOWN			

AN442D4
28F6319-R
28F6319-L

PART No.	STOCK	MATERIAL	SPEC.	LH REQ.	RH REQ.	LH REQ.	RH REQ.	LH REQ.	RH REQ.	LH REQ.	RH REQ.	LH REQ.	RH REQ.
-7R	.064 x 3 x 6½	ALCLAD	57AB Comm A		1								
-7L	.064 x 3 x 6½	ALCLAD	57AB Comm A	1		1							
-6R	.064 x 8⅝ x 10½	ALCLAD	57AB Comm A		1								
-6L	.064 x 8⅝ x 10½	ALCLAD	57AB Comm A	1		1							
PARTS LIST PER ASSY.				-0		-2		-3		-4		-5	

AC		Stanley	5-19-41
NAVY SR-53	Z-P-AP	E.M. Smith	5/19/41
HEAT TREAT	FINISH	DRAFT	CHECK / STRUCT. / MAT. / APPROV. / ENG.

NAME HOUSING-ARMT-EMER. BOMB RELEASE PULLEY
CONSOLIDATED AIRCRAFT CORP. San Diego, Calif.
OPP. HAND 28F6129R
SIZE D
28F6129

LET	ALTERATION	WORK ORDER	BY
A	CHANGED -2 ASSY. (ORIG. MFGR'S) TO RAJAH		
B	PART NO. & MFGR. ADDED AS FOLLOWS: FOR -0 ASSY. CA-58 SHIELDED CABLE TO S-505-11 & AS-505-11 FROM CA-58 16 HIGH TENSION CABLE		

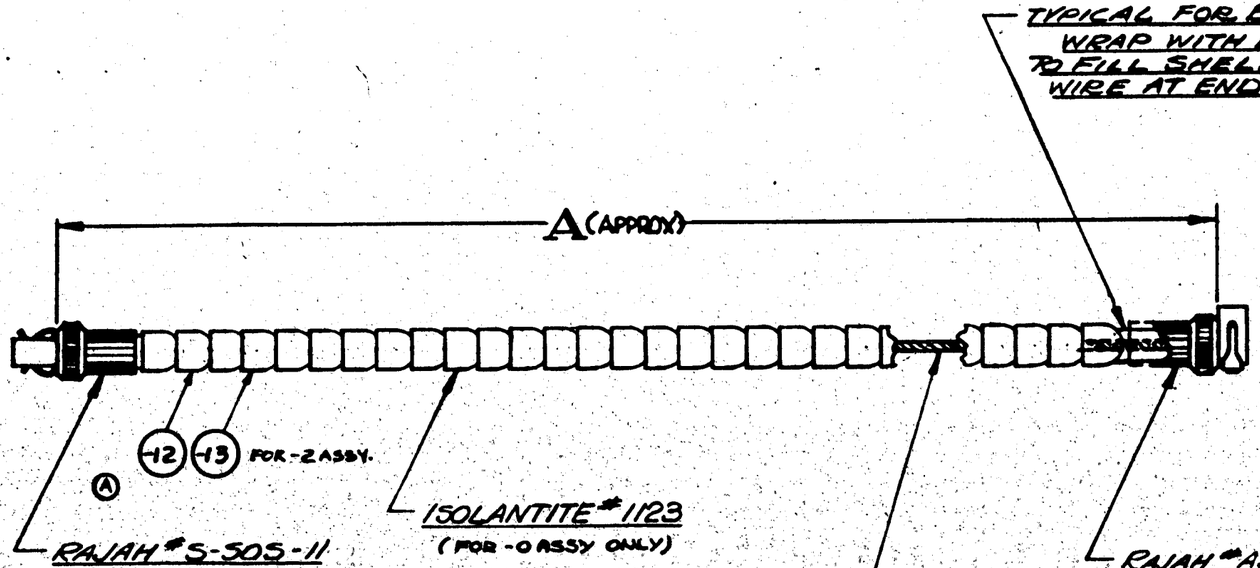

-8	A = 14
-9	A = 7
-12	A = 10
-13	A = 15

PART No.	STOCK	MATERIAL	SPEC.	LH REQ.	RH REQ.	LH REQ.	RH REQ.	LH REQ.	RH REQ.	LH REQ.	RH REQ.	LH REQ.	RH REQ.
				-0		-2		-3		-4		-5	
	S-505-11	RAJAH CO. { BLOOMFIELD AS-505-11	RAJAH CO. { N.V.			1		1		1		1	
	-13	CA-58 X 15" HIGH TENSION CABLE				1		1		1		1	
	PARTS IN -11 SUB ASSY.												
	-12	CA-58 X 10" HIGH TENSION CABLE				1		1		1		1	
	S-505-11	RAJAH CO. { BLOOMFIELD AS-505-11	RAJAH CO. { N.V.			1		1		1		1	
	PARTS IN -10 SUB ASSY.												
	#1123	ISOLANTITE CORP		2									
	S-505-11	RAJAH CO. { BLOOMFIELD AS-505-11	RAJAH CO. { N.J.	1		1		1		1		1	
	-9 .064 X 8	MOD. ANT. WIRE		1									
	PARTS IN -7 SUB ASSY.												
	#1123	ISOLANTITE CORP		2									
	S-505-11	RAJAH CO. { BLOOMFIELD AS-505-11	RAJAH CO. { N.J.	1		1		1		1		1	
	-8 .064 X 15	MOD. ANT. WIRE		1									
	PARTS IN -6 SUB ASSY.												
	-11	SUB ASSY.				1							
	-10	SUB ASSY.				2							
	-7	SUB ASSY.		1									
	-6	SUB ASSY.		2									

PARTS LIST PER ASSY.

C91876 #901 or C.13595

C.70496-T7713-88476

ASSY. BASIC No.	MODEL	NEXT ASSY.	QTY.
-2	PBY-6	28F6056	1
-2	PBY-6A	28F6056	1
-0	PBY5A	28U5004	1

REQUIREMENTS PER AIRPLANE

REPLACES 28F6196 -0, -2, -3, -4, -5

REPLACED BY — ACT. QTY.

LIST OF REQUIREMENTS UNLESS OTHERWISE SPECIFIED — SCALE 1/32 — 12" = 1'-0"

STAMP PART NUMBER WHERE SHOWN

AC			
NAVY NONE	NONE		
HEAT TREAT	FINISH	DRAFT	CHECK

DRAFT: M-41 — CHECK: [illegible] — STRUCT: [illegible] — MAT: [illegible] — APPROV: 1-27-49 — ENG: [illegible]

NAME ASS'Y - FURUS - FLEX. ANTENNA CONNECTORS

CONSOLIDATED AIRCRAFT CORP. San Diego, Calif.

OPP. HAND NONE

SPEC. D SIZE 28F6196

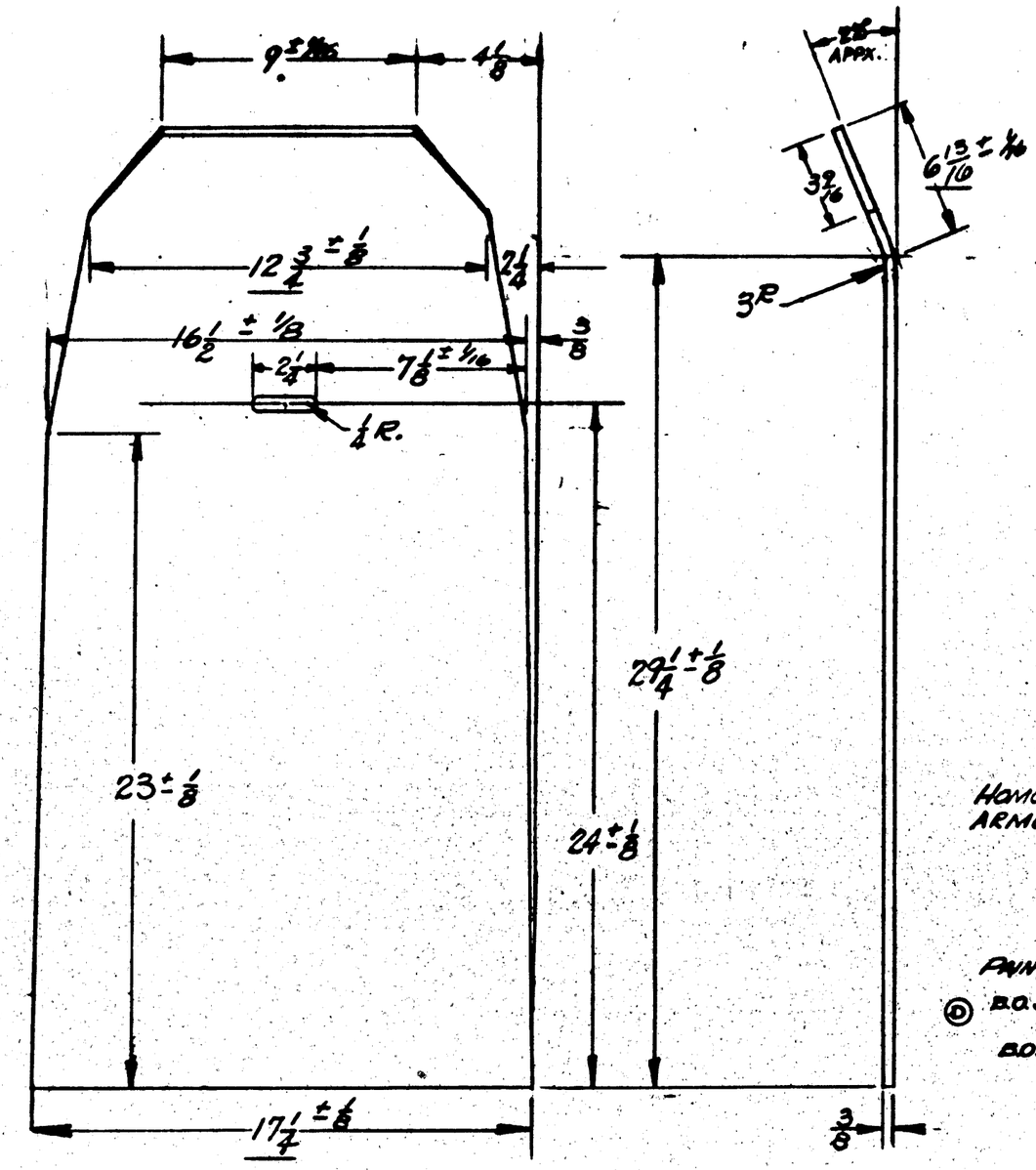

HOMOGENEOUS ARMOR PLATE — MAGNETIC — 3/8 STEEL

PAINT WITH 2 COATS OF ZINC CHROMATE PRIMER (P-27)

(D) B.O. SPEC. 0.S. 2380 (28-SAMN, PBY-5B C88477, PBY-5A C77113 (C.88476)

B.O. SPEC. 0.S. 2498 (PBY-5 C91876, PBY-5A C13535 NCR-179-1)

RUSH RELEASED 12-8-41.

PURCHASE TO DWG.

C#88477 → C#91876 → C#77113 → C#88476

ASSY DASH No.	MODEL	NEXT ASSY.	REQ'D
	28-SAMN	28F6233	1
	PBY-5A	28F6233	2
	PBY-5	28F6233	2
	PBY-5A	28F6233	2

REQUIREMENTS PER AIRPLANE

REPLACES — CALC WT.

REPLACED BY — ACT. WT.

LIGHT ON DIMENSIONS UNLESS OTHERWISE SPECIFIED ± 1/32 — SCALE 3" = 1'0"

STAMP PART NUMBER WHERE SHOWN

PART No.	STOCK	MATERIAL	SPEC.	LH REQ.	RH REQ.	LH REQ.	RH REQ.	LH REQ.	RH REQ.	LH REQ.	RH REQ.
-0	17 3/4 X 41 1/4	NOTED	NOTED								
-2											
-3											
-4											
-5											

PARTS LIST PER ASSY.

AC — NAVY NOTED — HEAT TREAT — NOTED — FINISH

12-1-41						
DRAFT	CHECK	STRUCT	MAT	APPROV	ENG	
				12-2		

NAME ARMOR PLATE-FURN. PILOT & CO-PILOT SEATS

CONSOLIDATED AIRCRAFT CORP. San Diego, Calif.

OPP. HAND

SIZE D — 28F6201

LET	ALTERATIONS			

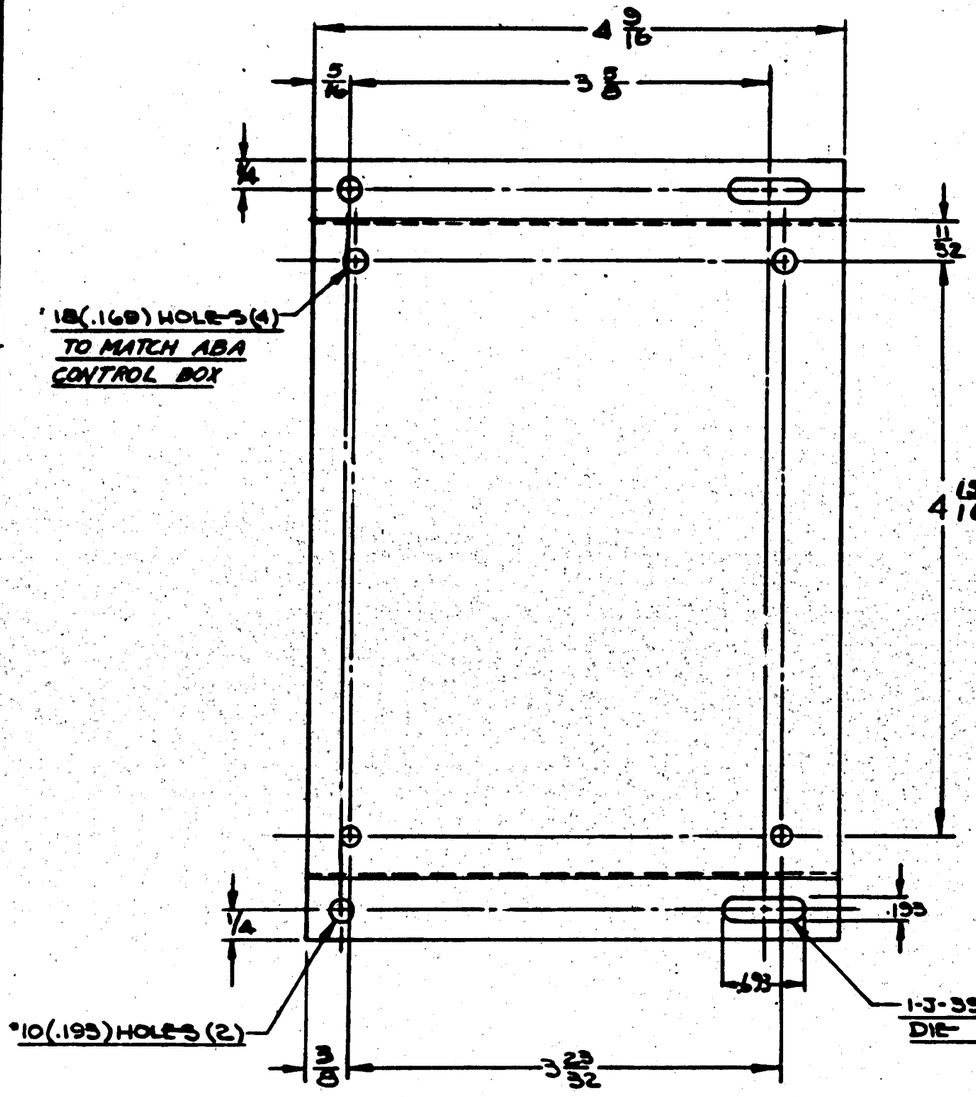

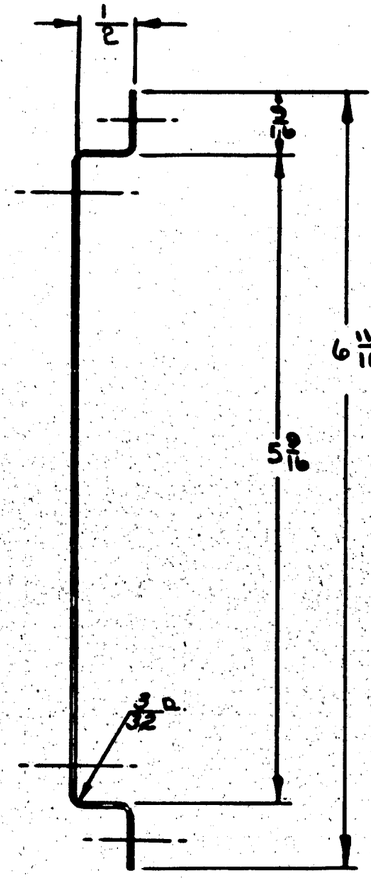

CONTRACT #91876
" " #70496
" " #77713
" " #88476

NOTE. ON 70496 (33 AIRPLANES) & 77713 PARTS ARE TO BE SUPPLIED TO NAVY FOR SERVICE INSTALLATION.

RUSH RELEASED 1/27/42

ASSY. DASH No.	MODEL	NEXT ASSY.	QTY.
	PBY-5	28F6205	1
	PBY-5A	28F6206	1

REQUIREMENTS PER AIRPLANE

REPLACES — Chge. Wt.

REPLACED BY — Adv. Wt.

SCALE 12"-1"-0

± 1/32

STAMP PART NUMBER WHERE SHOWN

PART No.	STOCK	MATERIAL	SPEC
	⊕ .040 x 6 5/16 x 5	Alc. 24 ST	QQA-561

PARTS LIST PER ASSY.

AC

NAVY None

HEAT TREAT

Z-P-AD

FINISH

NAME BRACKET - FURN. - A.B.A. CONTROL BOX

CONSOLIDATED AIRCRAFT CORP. San Diego, Calif.

28F6204

LET	ALTERATION	DATE	BY
A	28F6210 WAS 28F6211 -6 WAS -7 28F6211 -7 WAS -6 28F6210 -6 WAS 61% 28F6210 WAS 1/2 DIA. REVISED PER ECN-ALC-KA-14.5.8 DRAWING CHANGED TO B		

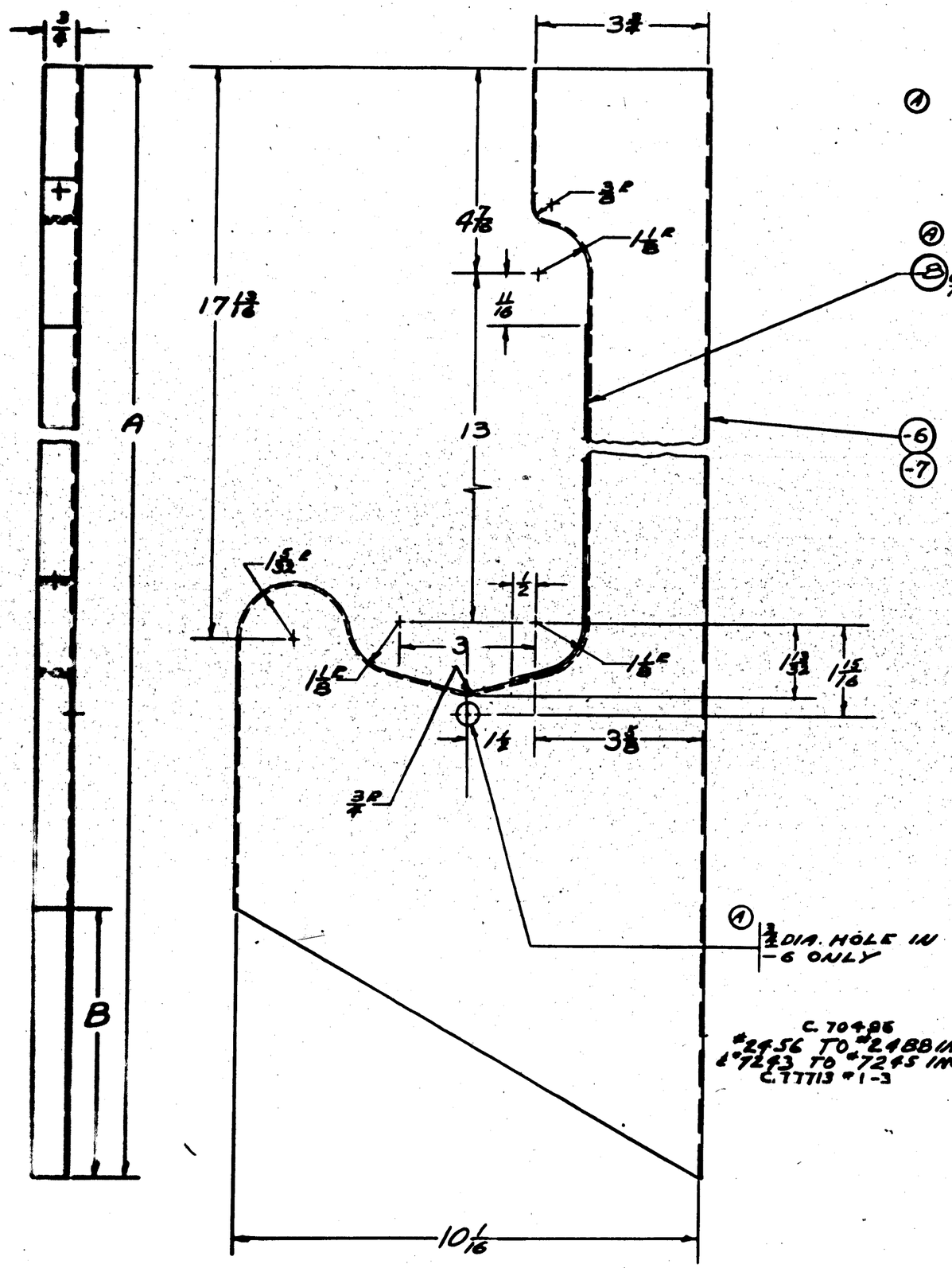

ALL RADII 1/4 EXCEPT AS SHOWN

	A	B
A -6	29 1/4	5 1/16
A -7	30 3/16	5 1/16

FINISH CODE	
Z	ANODIC TREATMENT
P	P-27 PRIMER
AP	ALUMINIZED PRIMER
C	CADMIUM PLATE

RELEASE AFTER RUSH RELEASE 12/23/41

C. 70496
#2456 TO #2488 INCL.
C. 7243 TO #7245 INCL.
C. 77713 #1-3

ASSY. DASH NO.	MODEL	NEXT ASSY.	REQ.
-2	PBY-5A	28F6211	1
-0	PBY-5A	28F6211	1
-2	PBY-5A	28F6211	1
-0	PBY-5A	28F6211	1

REQUIREMENTS PER AIRPLANE

REPLACES --- | 1 AB CALC. WT.

REPLACED BY | ASS'Y WT.

UNLESS OTHERWISE SPECIFIED ± 1/32 | SCALE 6" = 1'0"

STAMP PART NUMBER WHERE SHOWN

PART No.	STOCK	MATERIAL	SPEC.	LH REQ. -0	RH REQ. -0	LH REQ. -2	RH REQ. -2	LH REQ. -3	RH REQ. -3	LH REQ. -4	RH REQ. -4	LH REQ. -5	RH REQ. -5
-6	1/16 X 3 1/4 X 14 1/2	NEOPRENE	COMM.	1		1							
-7	.080 X 1 5/8 X 33	2S50 ALC.	AZAB-A			1							
-8	.050 X 1 5/8 X 33	2S50 ALC.	AZAB-A	1									

PARTS LIST PER ASSY.

AC ——— | NAVY SR-53 CLASS "F" | HEAT TREAT

2P-AP | FINISH

DRAFT 12-4-41 | CHECK | STRUCT | MAT | APPROV | ENG.

CHECK J.E.R. | MEIN | 12-4-41 | 12-4-41

NAME SUPT.-FURNS-WIND SHIELD ALCOHOL TANK

CONSOLIDATED AIRCRAFT CORP. SAN DIEGO, CALIF.

OPP. HAND WING

DWG. D | 28F6210

LET	ALTERATION	DATE	BY
	E.O. 43199		
A	2 5/8 WAS 3 1/16, 12 3/4 WAS 12 7/16	4-6-42	RD/MR
	WT. CHG. NEG.	" "	" "
B	IN ALM'AL ALL. EXT. 24ST-46A9-T"		
	WAS "ALCLAD 24ST-46A9-T" NO WT. CHG.	6-19-42	GENERAL
C	IN B/O. FOR -6 REPLACED "K1288 X 12 1/2 AL. ALL. EXT 24ST, 46A9-T WITH "NOTED." ADDED MAT'L NOTE #1.		
	WT. CHG. NEG.	8-5-43	P. HUTT

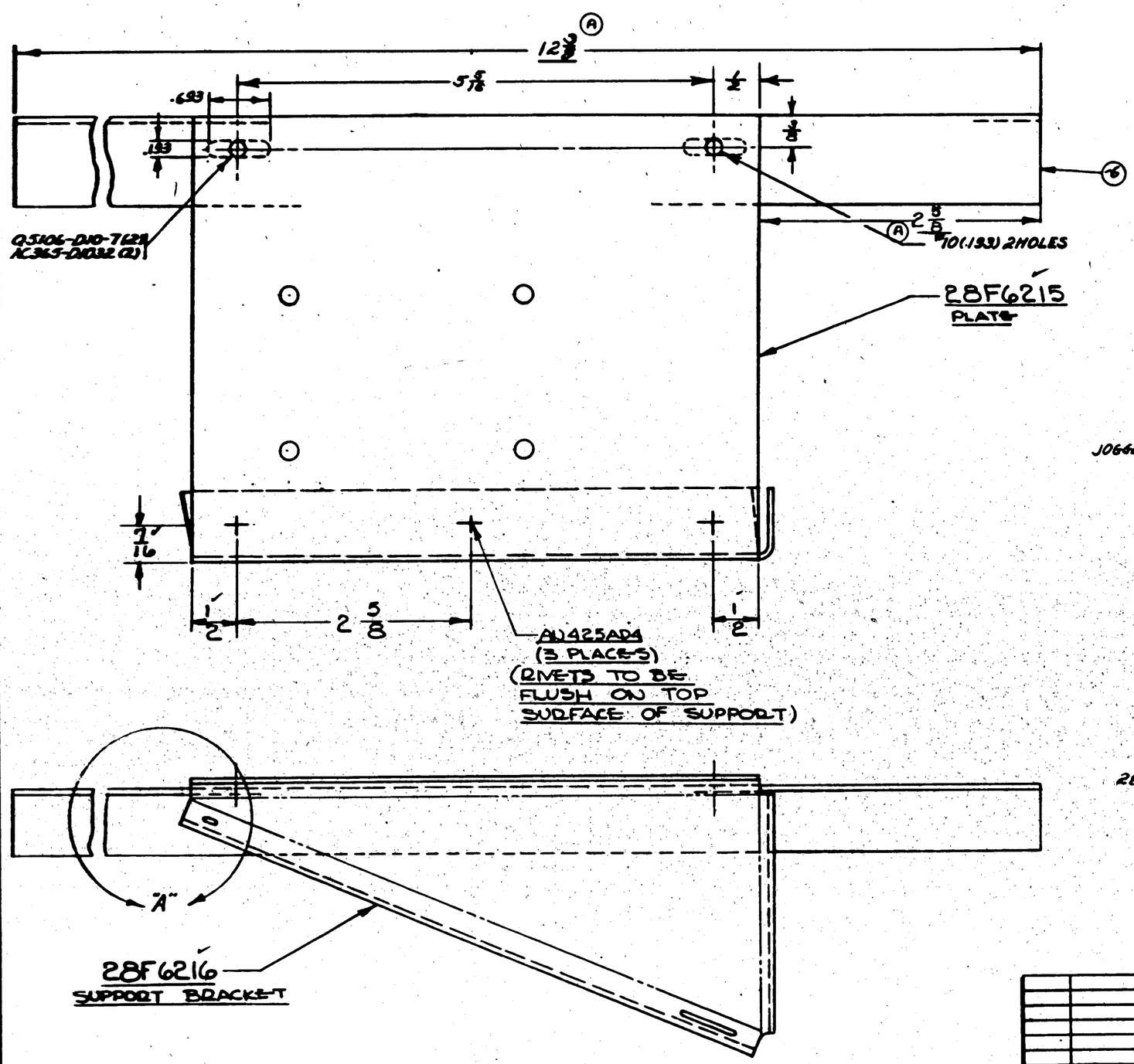

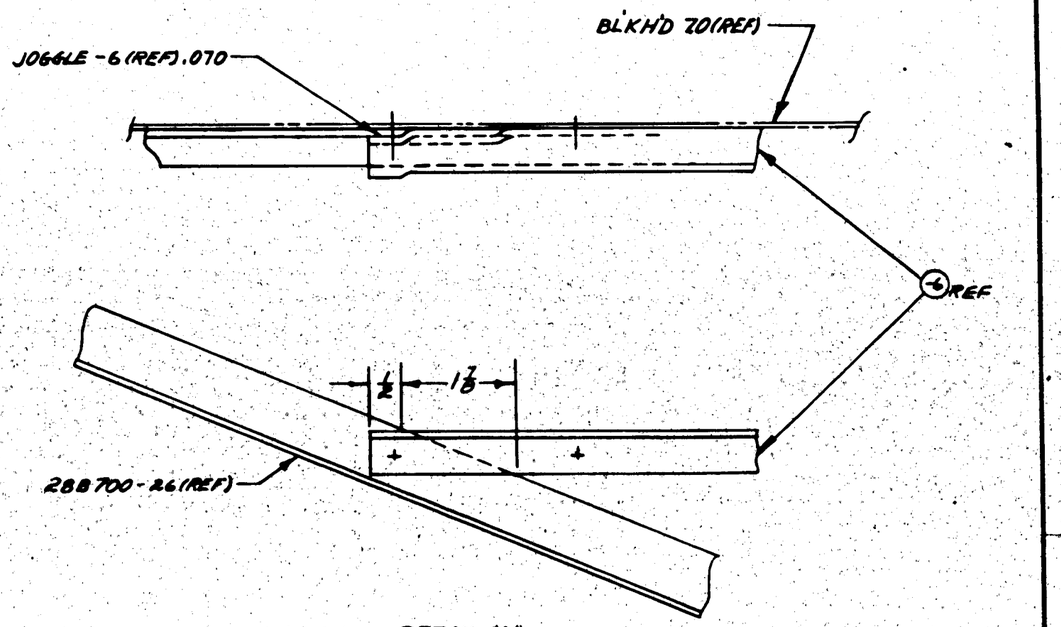

DETAIL "A"
SCALE - 6"-1'0"

MATERIAL NOTE-

© 1.-MAT'L. FOR -6 MAY BE-
(A) Y-6-A17T X 12 1/2, OR
(B) K1288 X 12 1/2, AL. AL. EXTR., SPEC. QQ-A-354-T.

CONTRACT # 91876
" " # 70496
" " # 77713
" " # 88976
TO BE INSTAL. BY NAVY ON DELIVERED SHIPS

ASSY.	28F6223	1	
PHYSA	28F6223	1	AN425AD4

ASSY. DASH NO.	MODEL	NEXT ASSY.	QTY.

REQUIREMENTS PER AIRPLANE

REPLACES	CALC. WT.
REPLACED BY	ASSY. WT.

LIMIT ON DIMENSIONS UNLESS OTHERWISE SPECIFIED: ± 1/32
SCALE - 1"-1'0" (NOTED)
STAMP PART NUMBER WHERE SHOWN

PART NO.	STOCK	MATERIAL	SPEC.	LH REQ.	RH REQ.	LH REQ.	RH REQ.	LH REQ.	RH REQ.	LH REQ.	RH REQ.	LH REQ.	RH REQ.
28F6215				1									
28F6216					1								
-6	NOTED	NOTED	NOTED	1									

PARTS LIST PER ASSY.

AC		SUPERS.						
NAVY NONE	NONE	12-18-41	DRAFT	CHECK	STRUCT	MAT	APPROV	ENG
HEAT TREAT	FINISH							

NAME ASS'Y.- FURNS.- ABA DYNAMOTOR SUPPORT

OPP. HAND NONE

CONSOLIDATED AIRCRAFT CORP. SAN DIEGO, CALIF.

SIZE D

28F6218

R 8129 J 82

LET	ALTERATION	DATE	BY
A	8 9/16 WAS 8 1/2 NO WT CHG.	8-8-45	[illegible]
B	ADDED "SIGNAL CONVERTER" TO TITLE, & ADDED -6, -700, -70[illegible] WT CHG NEG	12-29-45	[illegible]

E.O.A 40459
EO A 589431

#18(.169) 4 HOLES TO MATCH FREQUENCY INDICATOR NAF311007 (REF)
FOR - 700 ONLY
(B)

#18(.169) 4 HOLES TO MATCH NAF214672
FOR - 701 ONLY
(B)

2R

3½R

9½
4 5/8
4½ (REF)
2 11/16
2 7/16

4½ (REF)
2 9/16
8 9/16
6 7/16
18 1/8
7/8

A
A

(A)

1/4R
1/4R
1/4R
1/4
1/4
3½
7/8
7/8

4 HOLES
FOR SIZE & LOCATION SEE 28F6243 (REF)

1/4
7/8
7/8
1/4

SECTION "A-A"

FINISH C...

Z	ANODIC TREATM...
P	P-27 PRIMER
AP	ALUMINIZED PRIME...
C	CADMIUM PLATE

CONTRACT #91876 #90 & ON
CONTRACT #13595 #1.T.089
CONTRACT #91876 #1.T.089
" " #70496
" " #77713
" " #88476

	MODEL	NEXT ASSY.	REQ.
-701	PBY-5	28F6243	1
-701	PBY-5A	28F6243	1
-700	PBY-5	28F6243	1
-700	PBY-5A	28F6243	1

REQUIREMENTS PER AIRPLANE

REPLACES — CALC. WT. 1.23
REPL. BY — ASY. WT.

SCALE 6" = 1'-0"
STAMP PART NUMBER WHERE SHOWN

-701 MAKE FROM -6
-700 MAKE FROM -6
-6 DMIX15XRG REISOALC. 47AB-A

PART No.	STOCK	MATERIAL	SPEC.	LH REQ.	RH REQ.	LH REQ.	RH REQ.	LH REQ.	RH REQ.	LH REQ.	RH REQ.	LH REQ.	RH REQ.
PARTS LIST PER ASSY.				-0	-2	-3	-4	-5					

AC							
NAVY SR 65	2-P-AD						
HEAT TREAT	FINISH	DRAFT	CHECK	STRUCT	MAT	APPROV	ENG.

NAME PAN-FURN-FREQUENCY INDICATOR-SIGNAL CONVERTER SUPPORT
OPP. HAND NONE
CONSOLIDATED AIRCRAFT CORP. San Diego, Calif.
SIZE D
28F6244

R

LET	ALTERATION	DATE	BY
A	3/8 WIDE 3/8 DP.		

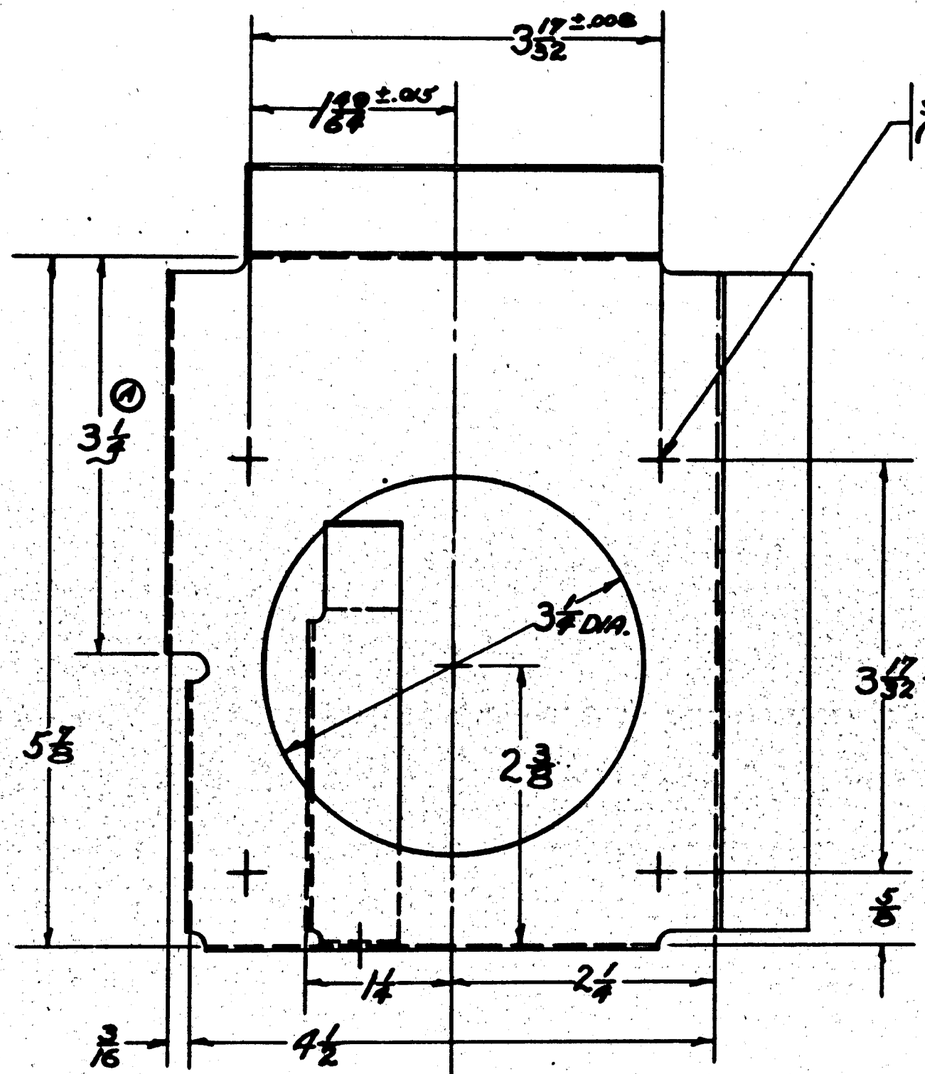

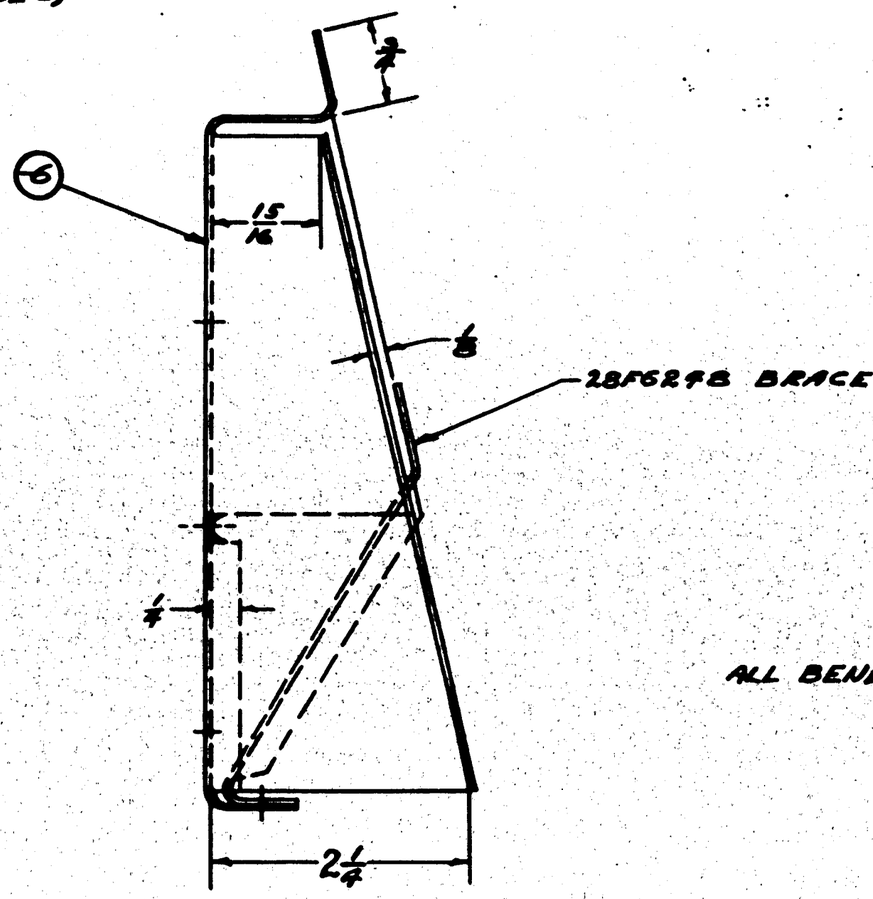

ALL BEND & RELIEF 1/8 RADII

FINISH CODE	
Z	ANODIC TREATMENT
P	P-27 PRIMER
AP	ALUMINIZED PRIMER
C	CADMIUM PLATE

RELEASE AFTER RUSH RELEASE 12-29-41

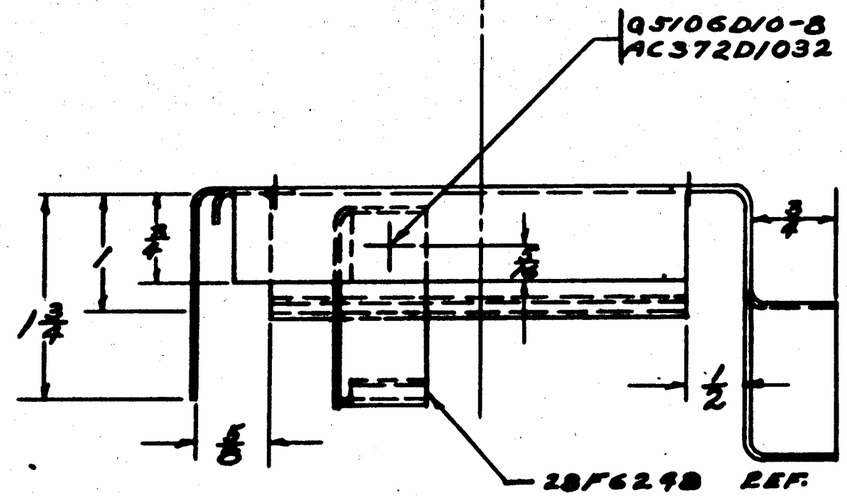

CONT'd 70496 & 35
CONT'd 77713 & 3
" 7243 to 7245 INC. & 3
2456 to 2488 INC. & 33

ASSY. DASH NO.	MODEL	NEXT ASSY.	QTY.
REQUIREMENTS PER AIRPLANE	PBY-5A	28F6246	1
REPLACES		.21 Cond. Wt.	
REPLACED BY		Ass'y. Wt.	
UNLESS OTHERWISE SPECIFIED	SCALE 12"-1'0"		
STAMP PART NUMBER WHERE SHOWN			

AC372B1032 — 1
Q5106AM-8 — 1
28F6246 — 1

PART No.	STOCK	MATERIAL	SPEC.	LH REQ.	RH REQ.	LH REQ.	RH REQ.	LH REQ.	RH REQ.	LH REQ.	RH REQ.	LH REQ.	RH REQ.
-6	.050 x 2 3/4 x 9 1/2	AL. 2024	QQA-225										
PARTS LIST PER ASSY.				-0		-2		-3		-4		-5	

AC	—						
NAVY SR-53	ZP-AP					1-3-42	
HEAT TREAT	FINISH	DRAFT	CHECK	STRUCT	MAT	APPROV	ENG

NAME BRKT.-FURNS-WIND-SHIELD ELEC. MOTOR
CONSOLIDATED AIRCRAFT CORP. San Diego, Calif.

OPP. HAND
SIZE D
28F6247

LET	ALTERATION	DATE	BY
C	TRACED NO WT. CHG.	10-9-42	[illegible]
D	REM'D DIMS. 1" & 5/16" (I.PLC)		
	ADDED ℄ SYM. NO WT. CHG.	10-9-42	[illegible]

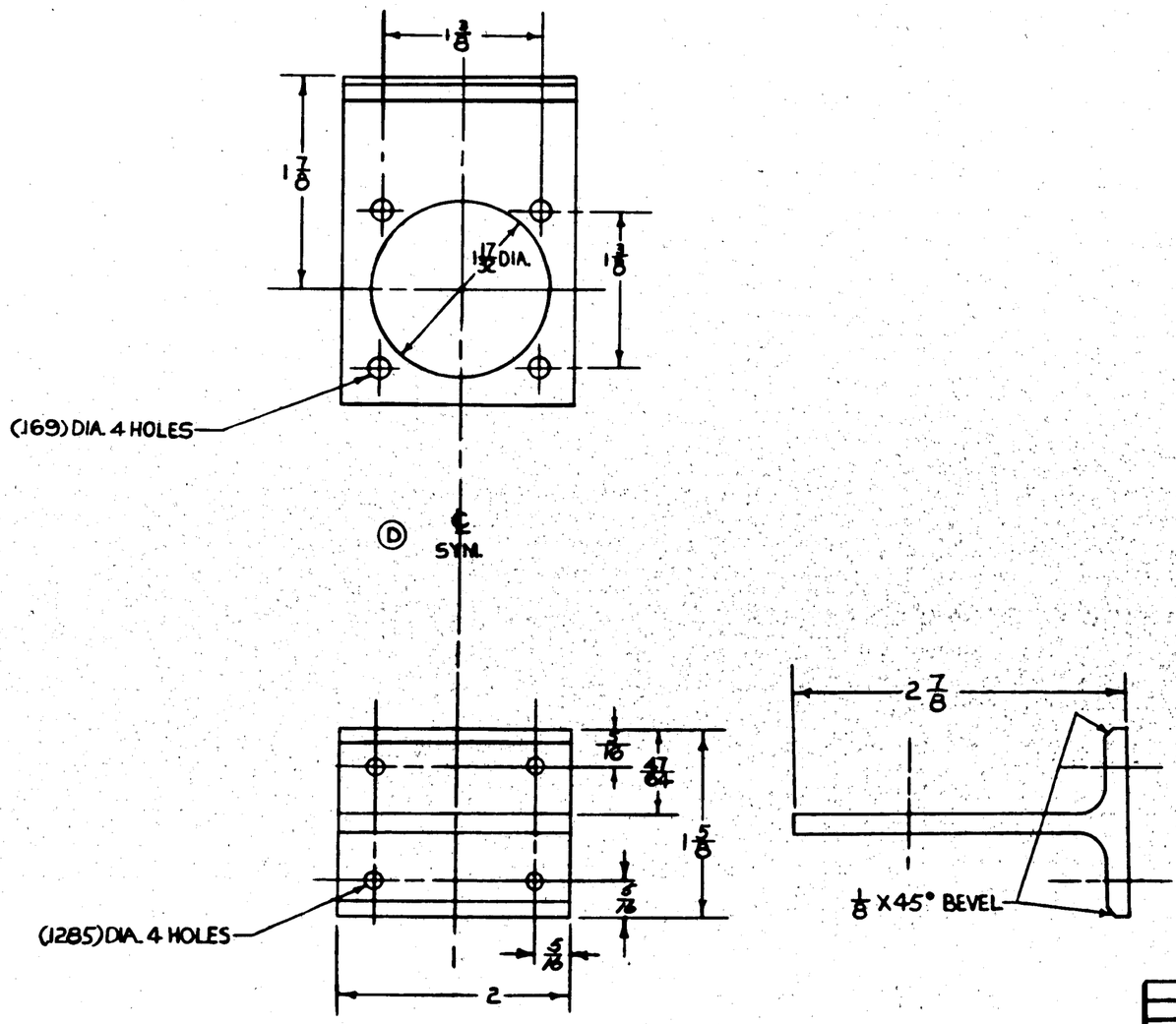

C.88476 & N.O.a(S)464 *1 TO MCR *254-4 CONT. 91876

MCR *254-4

ASSY. DASH NO.	MODEL	NEXT ASSY.	QTY.
	PBY-5A	28F7584	2
	PBY-5B	28F7340	2
	PBY-5A	28F5357	2
	PBY-5	28F5357	2

REQUIREMENTS PER AIRPLANE

REPLACED 28F6249 12-29-41 ENG. NO.

REPLACED BY APP. NO.

± 1/64 SCALE 12"-1'0"

PART No.	STOCK	MATERIAL	SPEC.	LH REQ.	RH REQ.	LH REQ.	RH REQ.	LH REQ.	RH REQ.	LH REQ.	RH REQ.	LH REQ.	RH REQ.
PARTS LIST PER ASSY.	NOTED	NOTED	NOTED	-0		-2		-3		-4		-5	

AC		BAKER	FREEL	GERBER	E. HINES	SHOP ORDA	WILLIAMS NAV
NAVY ——	Z-P-2GP	12-29-41	1-9-42			1-20-42	WOLD
HEAT TREAT	FINISH	DRAFT	CHECK	EXPTL DRAWG	MAT	APPROV	ENG.

NAME BRACKET-FURN'S-INST PANEL SHOCK MTG.

OPP. HAND NONE

DWG. SIZE D 28F6249

CONSOLIDATED VULTEE AIRCRAFT CORP. SAN DIEGO DIVISION . . SAN DIEGO, CALIF.

FINISH CODE	
Z	ANODIC TREATMENT
P	P-27 PRIMER
GP	GREEN PRIMER
C	CADMIUM PLATE

NOTE: MATERIAL MAY BE:
(A) K14474 X 2 1/8 AL. ALLOY EXTR. SPEC. QQ-A-354 COND. T OR
(B) K14474 X 2 1/8 AL ALLOY EXTR. SPEC. AN-A-8 COND. T.

28F6249R

LET	ALTERATION	DATE	BY

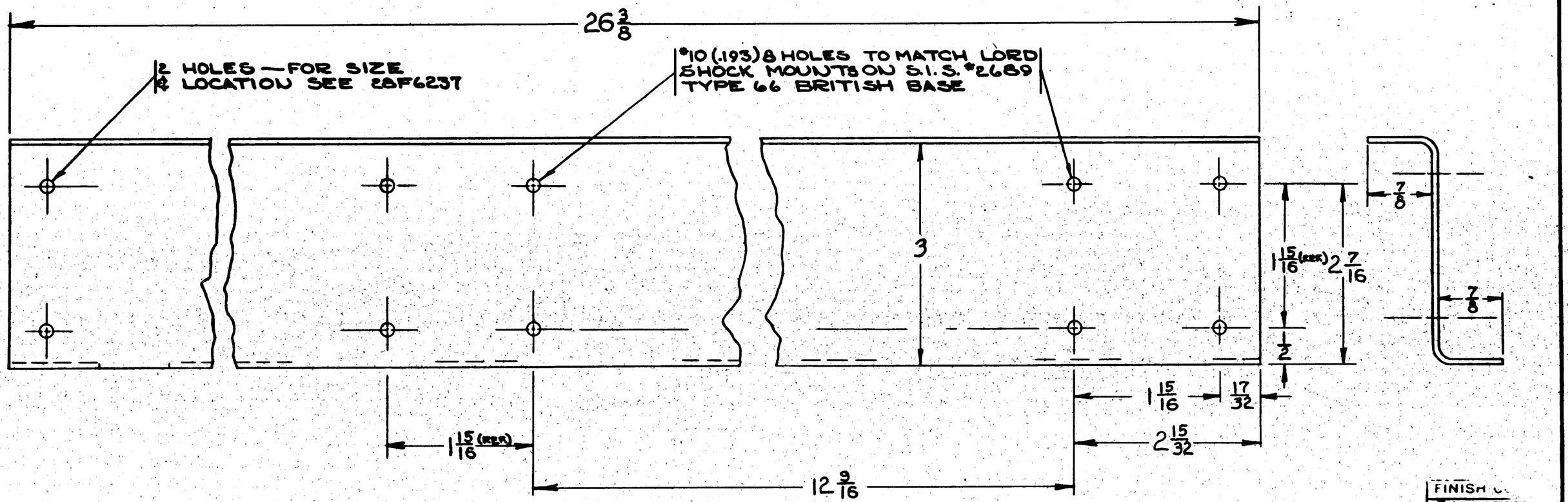

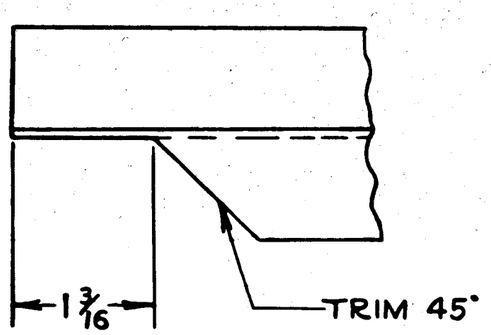

NOTE:- ALL BEND RADII 3/16 (C-88476 ONLY)

INSTALL ON C-88476 — FURNISH PARTS FOR SERVICE INST.- ON C-70496 & 77713

FINISH CODE

Z	ANODIC TREATMENT
P	P-27 PRIMER
AP	ALUMINIZED PRIMER
C	CADMIUM PLATE

ASSY. DASH NO.	MODEL	NEXT ASSY.	REQ.
L	PBY-5	28F6237	1
R	PBY-5	28F6237	1
-R	PBY-5A	28F6237	1
-L	PBY-5A	28F6237	1

REQUIREMENTS PER AIRPLANE

REPLACES — CALC. WT. .94

REPLACED BY — ACT. WT.

UNLESS OTHERWISE SPECIFIED DIMENSIONS DESIGNATED ARE ± 1/32

SCALE 12" = 1'-0"

STAMP PART NUMBER WHERE SHOWN

PART NO.	STOCK	MATERIAL	SPEC.	LH REQ.	RH REQ.	LH REQ.	RH REQ.	LH REQ.	RH REQ.	LH REQ.	RH REQ.	LH REQ.	RH REQ.
	.080 x 5 1/2 x 26 1/2	24ST-ALC	4A8-T	-0	-2	-3	-4	-5					

PARTS LIST PER ASSY.

AC — NAVY SR-53 — HEAT TREAT

ZP-AP — FINISH

4-8-42 GARCIA — DRAFT

CHECK — STRUCT — MAT — APPROV — ENG.

NAME BRACKET - FURNS - ASV TRANS. RACK

OPP. HAND 28F6259-R

CONSOLIDATED AIRCRAFT CORP., SAN DIEGO, CALIF.

SIZE D — DWG. NO. 28F6259

28E5774 BOX
LOCATE THIS END
FLUSH WITH 28F6262 REF.

AN515D10-8(4)
AC372D1032(4)
TO MATCH HOLE
IN 28E5774 BOX

28B1000-117 REF.

AN515D10-8 SCREW(4)
AC372D1032 NUT(4)

28F6262 MTG. BRKT.

28F6260 BRACE

28B1000-119 REF.

AN515D10-8 SCREW(2)
AC372D1032 NUT(2)
PICK UP EXISTING
HOLE ATTACHING
28E5638 REF. AS
SHOWN IN OPP. VIEW.

28E5638 REF.

5/16

3/8

1 5/8

3/4 APPROX

C.A.C. #VA1-2S (1)
#1230S NEEDLE CONTROL VALVE
ACROTORQUE CO.
CLEVELAND, OHIO

OUT'BD.

3/4 APPROX

1 3/4 REF.

FWD.

1.33

AN515D6-29 (4 REQ'D)
AC372D632 (4 REQ'D)
NUT FOR LOCKING
PURPOSES ONLY.

CONT. "D6006 ON SHTS "1456-"D6008"
CONT. "D7718 ON SHTS "7493-"D7719"

REV-LR 28F6232 /

ASSY. DWG. NO.	MODEL	NEXT ASSY.

REQUIREMENTS FOR AIRPLANE

REPLACES — 69 Next Wt.

REPLACED BY — Appl. Wt.

SCALE 2"=1'0"

-6 SUB-ASSY.

-8 SUB ASSY.

PART No.	STOCK	MATERIAL	SPEC.	LH REQ.	RH REQ.	LH REQ.	RH REQ.	LH REQ.	RH REQ.	LH REQ.	RH REQ.	LH REQ.	RH REQ.
				-0		-2		-3		-4		-5	

PARTS LIST FOR ASSY.

RUSH RELEASED, 1-22-42

AC —
NAVY NONE
HEAT TREAT

—
NONE
FINISH

DRAFT | ENGR. | STRUCT. | MAT. | APPROV. | ENG.

NAME INSTALL-FURNS-WIND-SHIELD WIPERS & SPRAY CONTROL

CONSOLIDATED AIRCRAFT CORP. San Diego, Calif.

OPP. HAND NONE

SIZE D

28F6261

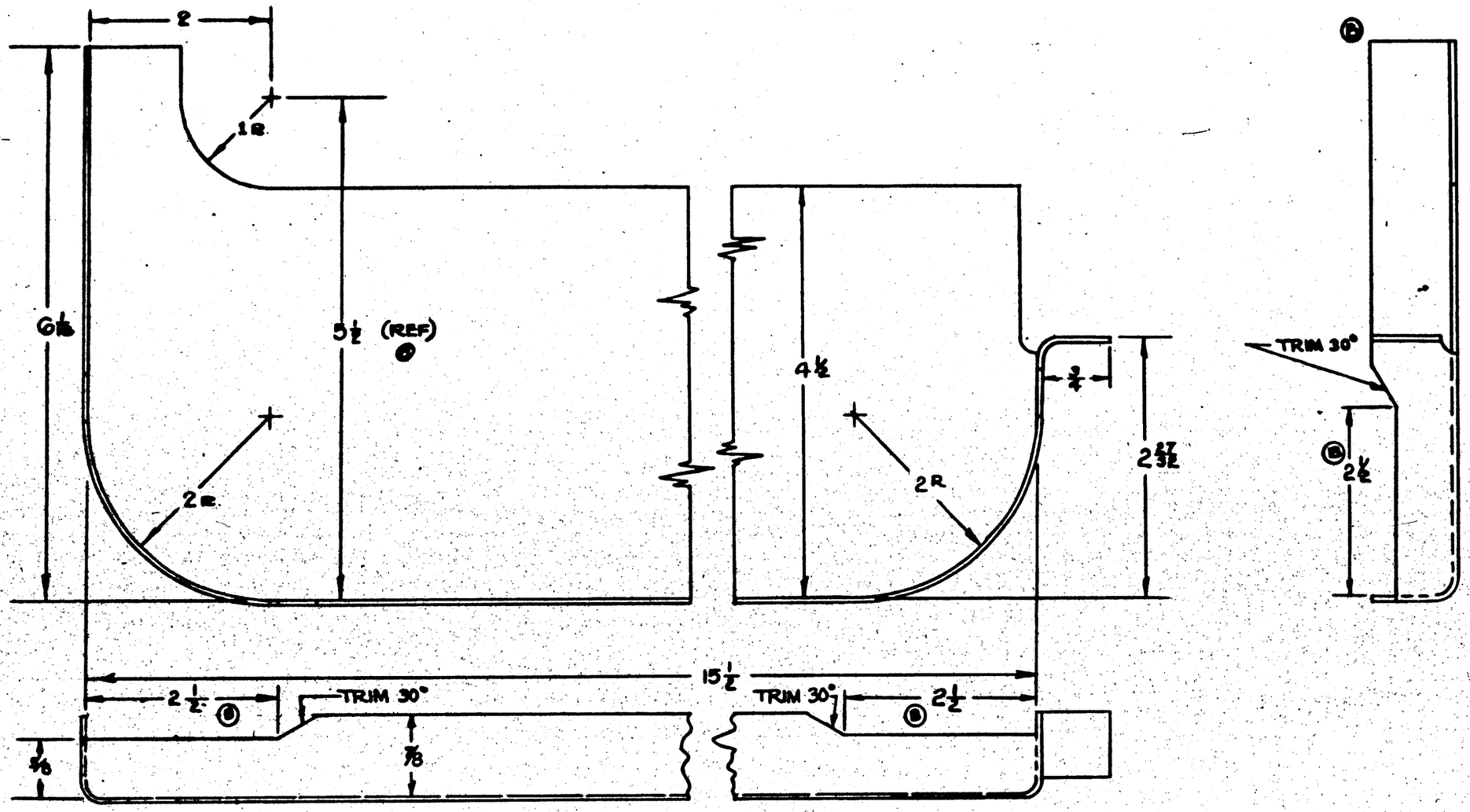

LTR		DATE	BY

FINISH CODE	
Z	ANODIC TREATMENT
P	P-27 PRIMER
AP	ALUMINIZED PRIMER
C	CADMIUM PLATE

RUSH-RELEASE
2-26-42

Ⓑ CONTRACT #91576 SHIPS 1-92
CONTRACT #70496, #77713 ⓒ FIRST 52 SHIPS OF 88476

NOTE: ALL {REL IRF / BEND RADII} 5/16 UNLESS OTHERWISE NOTED

NOTE:
1. CONTRACTOR INSTALLED ON CONTRACTS 88476 & 91576
2. ON CONTRACT #70496 (13 AIRPLANES) & 77713 PARTS TO BE FURNISHED NAVY FOR SERVICE INSTL'N

MODEL	NEXT ASSY.	USED
PBY-5	CAT 5-170	1
PBY-5A	CAT 5-170	1

REQUIREMENTS PER AIRPLANE

REPLACES	QTY. REQ'D.
	2
REPLACED BY	ASY. QTY.

SCALE 12" = 1'0"

PART No.	STOCK	MATERIAL	SPEC.	LH REQ. -0	RH REQ. -0	LH REQ. -2	RH REQ. -2	LH REQ. -3	RH REQ. -3	LH REQ. -4	RH REQ. -4	LH REQ. -5	RH REQ. -5
PARTS LIST PER ASSY.													

AC							
NAVY 52-53	ZP-AP						
HEAT TREAT	FINISH	DRAW	CHECK	STRUCT	MAT	APPROV	ENG.

NAME EXTENSION
TURN - RADIO OPERATORS

CONSOLIDATED AIRCRAFT CORP. San Diego, Calif.

APPROVED

SIZE D | DWG. 28F627C

E.O. A29726

LET	ALTERATION	DATE	BY
A	W/O DIM. WAS 5/8, 13/64 WAS 3/16, & 5/8 WAS 5/16. NEG. W.T. CHG.	9-29-43	HUNT

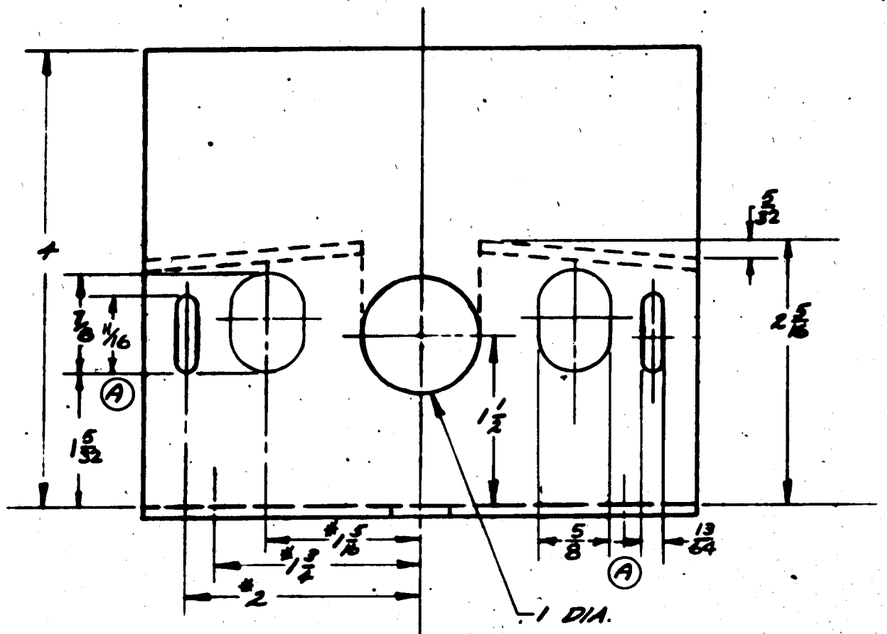

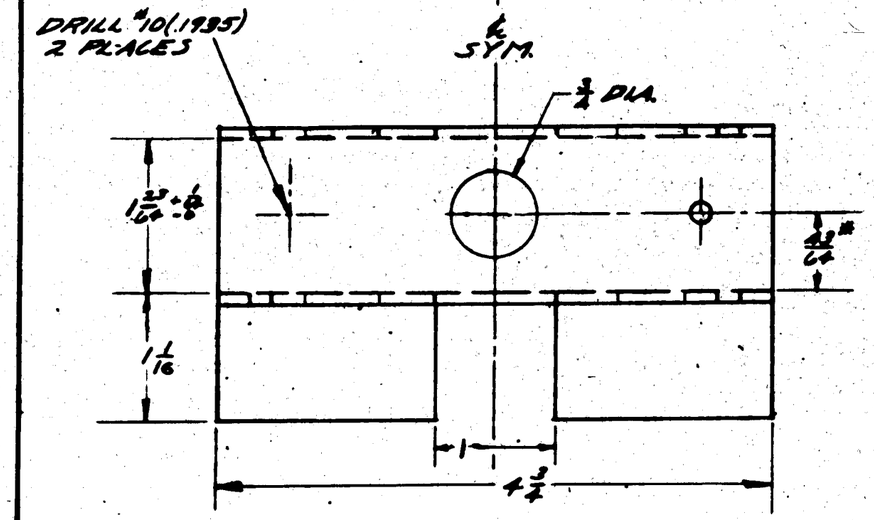

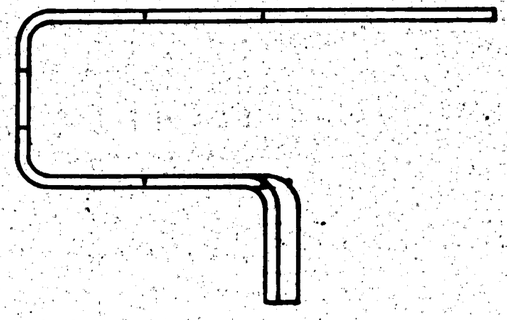

NOTE:
DIMENSIONS MARKED THUS #
ARE TO MATCH MATING PART
NO. 28F6308
BEND RAD 3/16.

FINISH CO	
Z	ANODIC TREATM
P	P-27 PRIMER
AP	ALUMINIZED PRIMER
C	CADMIUM PLATE

CONT. # TT713
S.O. 949-16
CONT. # 704-96
S.O. 936-69

ASSY. DASH NO.	MODEL	NEXT ASSY.	REQ'D
	PBY-5A	28F6311	1
	PBY-5A	28F6311	1
	PBY-5	28F6311	1
	PBY-4	28F6311	1

REQUIREMENTS PER AIRPLANE

REPLACES — CALC. WT. .41

REPLACED BY — ACT. WT.

SCALE 12" = 1'-0"

STAMP PART NUMBER STRAIGHT ON THIS

PART NO.	STOCK	MATERIAL	SPEC.		-0	-2	-3	-4	-5
	.091 x 4 1/8 x 10	ALCLAD	4278 ANNO. A	1	LH RH	LH RH	LH RH	LH RH	LH RH
	PARTS LIST PER ASSY.				REQ.	REQ.	REQ.	REQ.	REQ.

AC		Hunter	Hunt		Klein		
NAVY SR-53	Z-P-2AP	7-28-43	8-1-43		8-2-43	R	
HEAT TREAT	FINISH	DRAFT	CHECK	STRUCT	MAT	APPROV	ENG.

NAME BRACKET-ARM'T.-BOW TURRET LOCK-SUPPORT — OPP. HAND

CONSOLIDATED AIRCRAFT CORP. SAN DIEGO, CALIF.

SIZE D — 28F6304

Completed 8/6/43 K

LET	ALTERATION	DATE	BY
A	LEFT END OF -6 REDRAWN	12-22-41	[illegible]
B	-7 CLIP .123 THICK WAS .081 WT. CHG. NEG.	5-23-42	[illegible] K
C	DIMS. 9/16, 1 & 2 WERE 9/32, 1/2 & 3/4" RESP. REMOVED 1/8 DIM. IN BOTH LENGTH OF -6 "11 3/4" WAS "11 3/8" WT. CHG. NEG.	8-20-42	[illegible]

E.O. AIR613
E.O. A93410

-8 BLOCK

-9 BLOCK

-6 PLATE

-7 CLIP

Q4303D4 RIVET C'SINK THIS SIDE.

DRILL #10 (.1935)

DRILL #10 (.1935) 3 PLACES TO MATCH .30 CAL. B.A.M. GUN. SEE 28F6311.

SPOTWELD

SPOTWELD

DRILL 1/8

VIEW A-A

CONT. "TTT13 S.O. 949-16
CONT. "TOPK S.O. 926-69
31 SHIPS

ASSY. DASH NO.	MODEL	NEXT ASSY.	REQD.
	P8Y-5B	28F6311	1
	P8Y-5A	28F6311	1
	P8Y-5	28F6311	1
	P8Y-4	28F6311	1

Q4303D4

REQUIREMENTS PER AIRPLANE

REPLACES — CALC. WT. .19

REPLACED BY — ACT. WT.

SCALE 12" = 1'-0"

STAMP PART NUMBER WHERE SHOWN

PART NO.	STOCK	MATERIAL	SPEC.	LH REQ.	RH REQ.	LH REQ.	RH REQ.	LH REQ.	RH REQ.	LH REQ.	RH REQ.	LH REQ.	RH REQ.
PARTS LIST PER ASSY.				-0		-2		-3		-4		-5	
-9	.064 x 1 5/16 x [illegible]	ALCLAD	4340 CONST 1										
-8	.064 x 1 1/16 x 2 1/2	ALCLAD	4340 CONST 1										
A -7	.123 x 1 3/16 x 3 1/2	ALCLAD	4340 CONST 1										
-6	.128 x 11 3/4 x 12 1/8	ALCLAD	4340 CONST 1										

AC		HATCHER	[illegible]	[illegible]		[illegible]	
NAVY-6 ISR-53	E-P-2AP	6-18-41	[illegible]	[illegible]	JCH	[illegible]	[illegible]
HEAT TREAT	FINISH	DRAFT	CHECK	STRUCT	MAT	APPROV	ENG.

NAME PLATE-ARM'T.-BOW TURRET LOCK-REL HANDLE

OPP. HAND

CONSOLIDATED AIRCRAFT CORP. San Diego, Calif.

ENGR. D

28F6306

FINISH CODE

Z	ANODIC TREATMENT
P	P-27 PRIMER
AP	ALUMINIZED PRIMER
C	CADMIUM PLATE

LET	ALTERATION	DATE	BY
	E.O. A-74419		
A	CREATED -14 & -15 SUB ASSYS IN -7 SUB ASSY 06342-3R WAS 06342-3L. WT. CHG. NEG.	11-18-42	HOUT
	E.O. A 93635		
B	-19 WAS -16 -20 WAS -17. IN TAB BLK 223 3/8 WAS 219 & 222 3/8 WAS 217 1/2. WT CHG NEG.	2-3-43	HUND
	E.O. B 1858		
C	DIM 58 WAS 59 WT. CHG. NEG.	9-2-43	MAIN
D	ON FACE AT CALLOUT -8 & -9, ADDED "SEE NOTE 8", ADDED NOTE 8. NO WT CHG.	10-2-43	HODIK

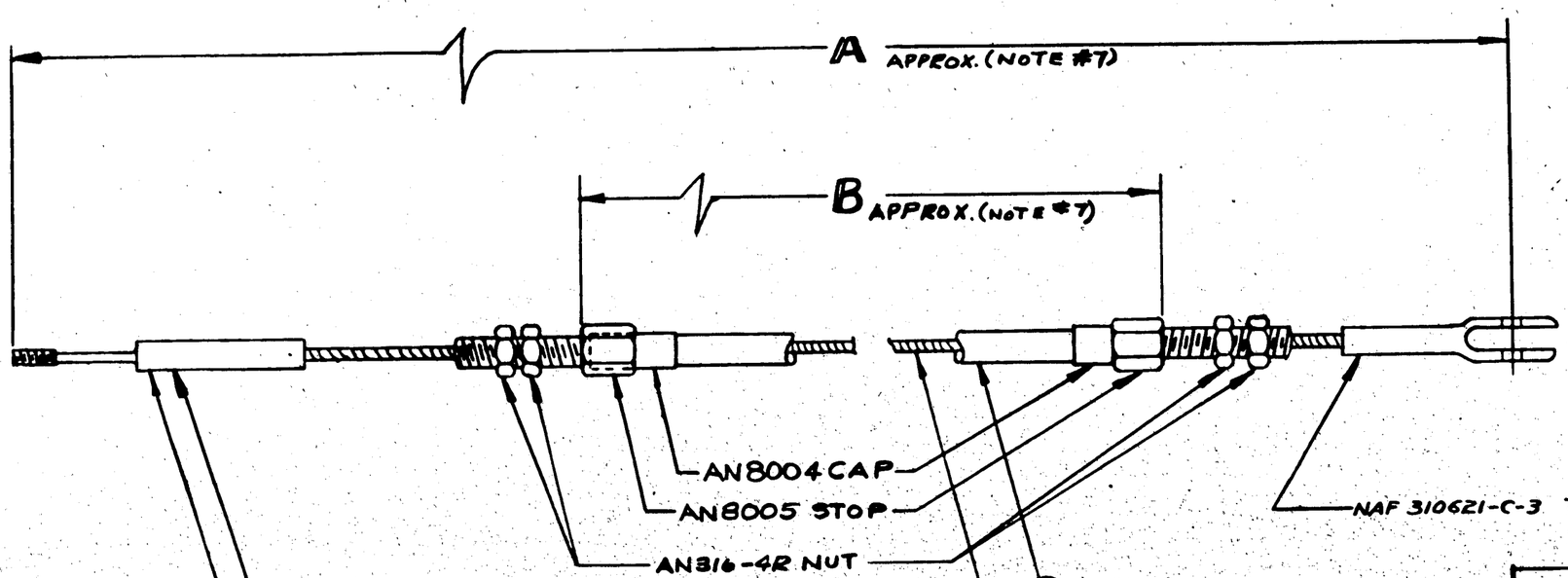

| | | |

	[illegible]		
	[illegible]		
	[illegible]		
	[illegible]		
	[illegible]		
C	[illegible]		
	[illegible]		
	INSULATING CAP TO SEE	24-12	

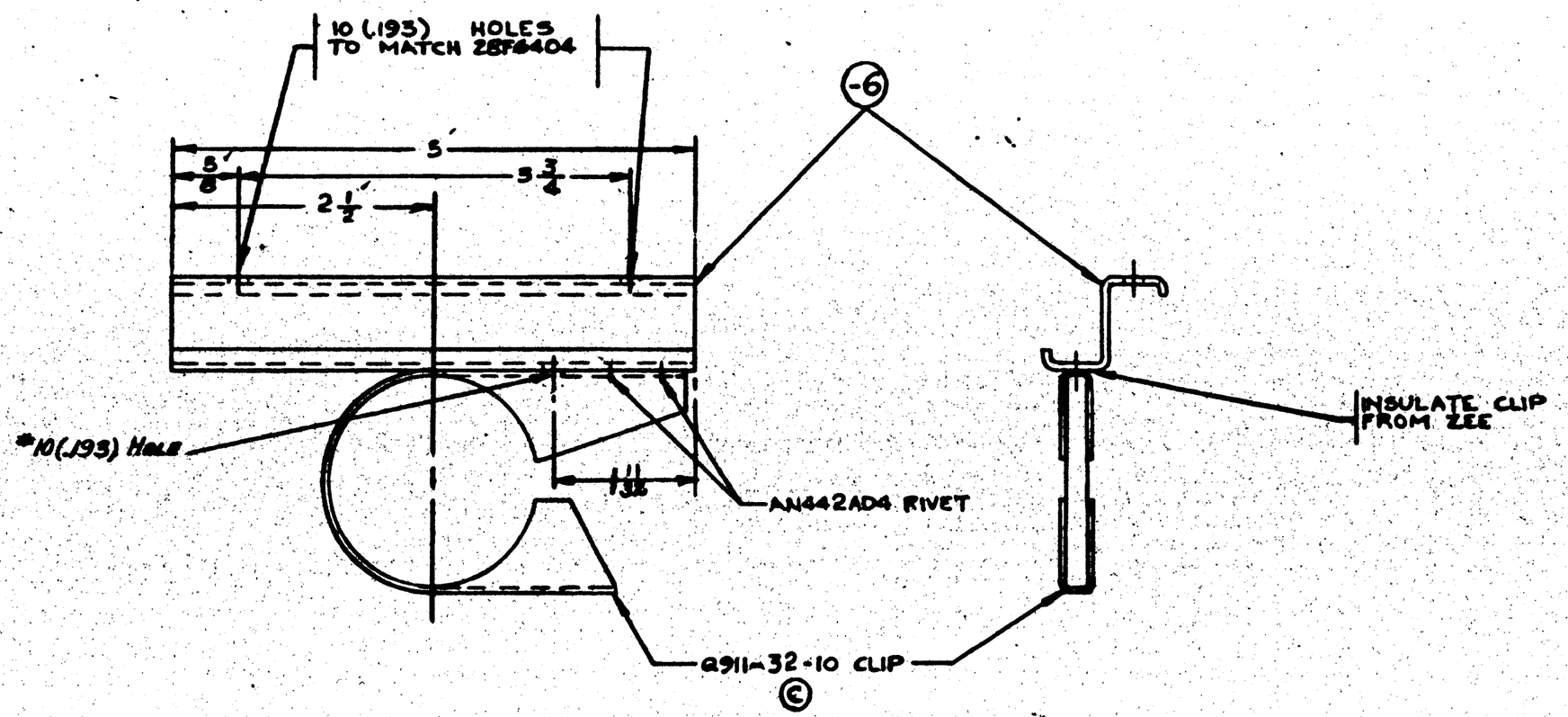

FINISH CODE	
Z	ANODIC TREATMENT
P	P-27 PRIMER
AP	ALUMINIZED PRIMER
C	CADMIUM PLATE

NOTE:
1. CONTRACTOR INSTALLED ON ALL AIRPLANES OF CONTRACT W545c & W578.
2. ON CONTRACT W704c (33 AIRPLANES) W77713 PARTS ARE TO BE FURNISHED TO NAVY FOR SERVICE INST'LN.

CONTRACT DATA			
70406	PBY-5	28F6402	1
77713	PBY-5A	28F6403	1
W545c	PBY-5A	28F6404	1
W578c	PBY-5	28F6404	1

QUANT. REQ'D	MODEL	PRESENT ASSY.	
REQUIREMENTS FOR AIRPLANE			
REPLACES		11	DRAW. NO.
REPLACED BY			ASS'Y NO.
	SCALE	12" = 1'-0"	

| | | |

LET	ALTERATION	DATE	BY

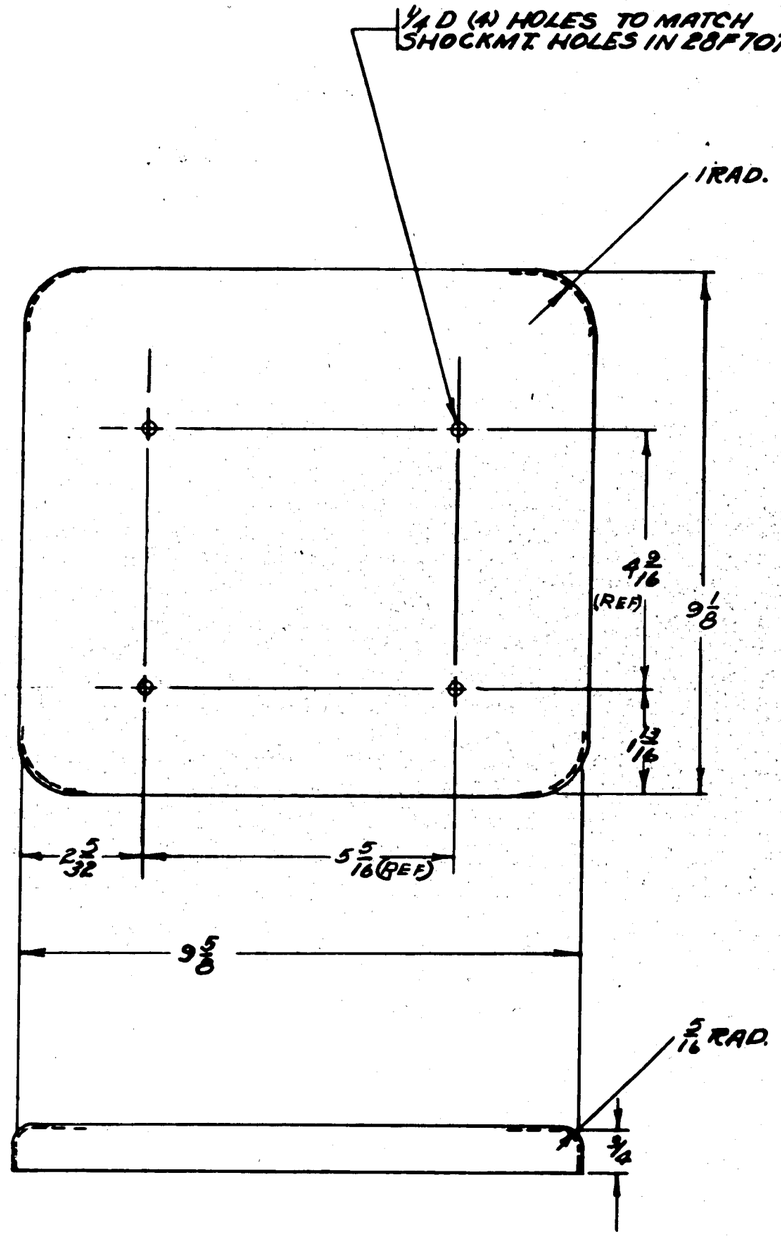

FINISH
ANODIZE
P-27 PRIMER
GREEN PRIME

ASSY. DASH NO.	MODEL	NEXT ASSY.	REQ.
	PBY-5A	28R4601	

REQUIREMENTS PER AIRPLANE

REPLACES	.44 CALC. WT.
REPLACED BY	ACT. WT.
UNLESS OTHERWISE SPECIFIED ± 1/32	SCALE 6"=1'-0"

STAMP PART NUMBER WHERE SHOWN

PART No.	STOCK	MATERIAL	SPEC.	LH REQ. -0	RH REQ. -0	LH REQ. -2	RH REQ. -2	LH REQ. -3	RH REQ. -3	LH REQ. -4	RH REQ. -4	LH REQ. -5	RH REQ. -5
PARTS LIST PER ASSY.	● .040 X 16" 7/8 X 15 1/2	RESTALC	QQA-T										

AC		PROTRACTOR LAYOUT CHECK					
NAVY NONE	Z-P-QP	DRAFT	CHECK	STRUCT	MAT	APPROV	ENG
HEAT TREAT	FINISH						

NAME SUPPORT-FURN-PILOTS VISUAL INDICATOR PAN

CONSOLIDATED AIRCRAFT CORP. SAN DIEGO, CALIF

UPP HAND NONE

DWG SIZE D

28F6431

R

LET	ALTERATION	DATE	BY

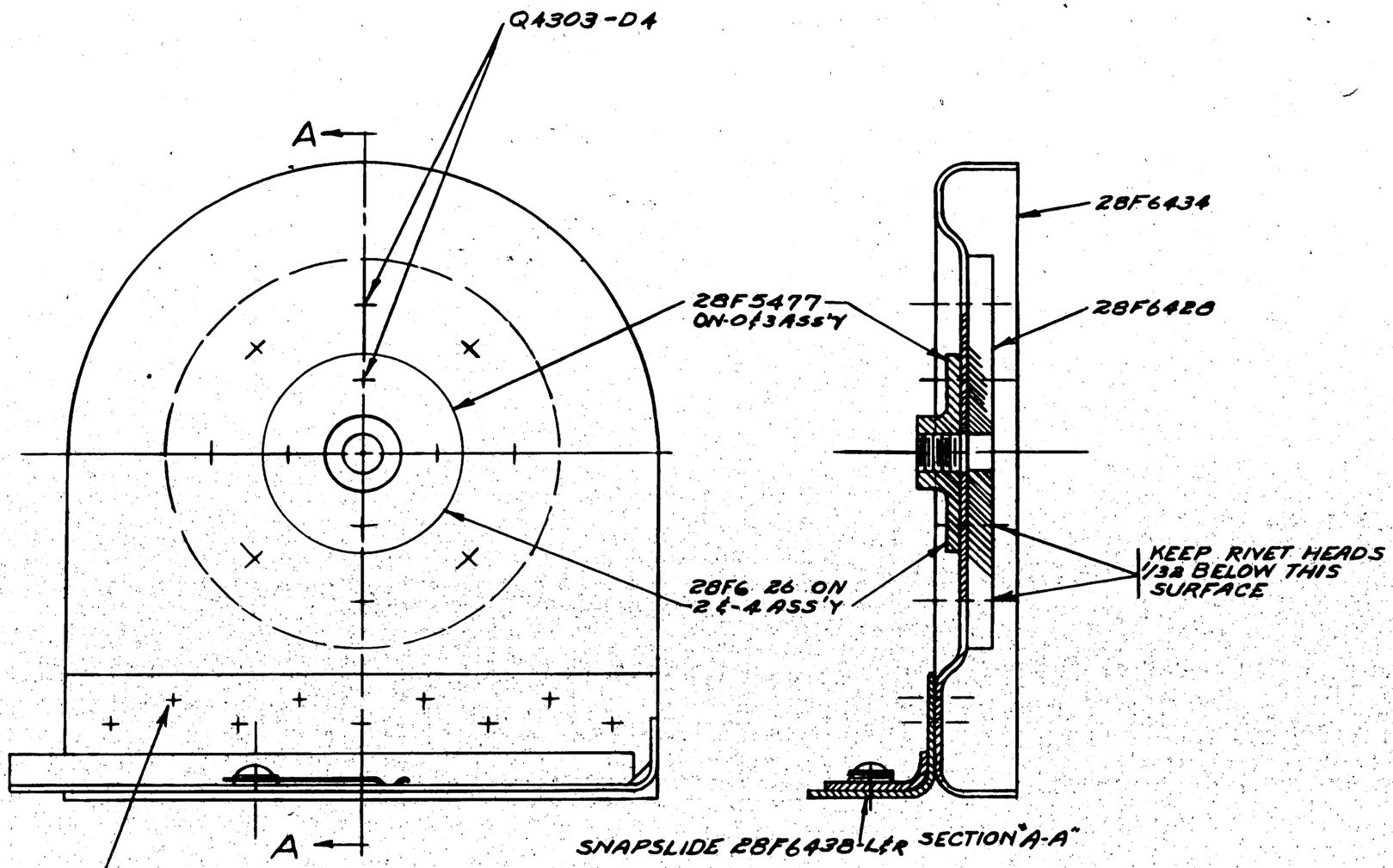

-4	.764		
-3	.705		
-2	.724		
-0	.836		
WEIGHTS			

ASSY. DASH No.	MODEL	NEXT ASSY.	REQ.
-4	PBY-5A	28F6420	1
-3	PBY-6A	28F6420	1
-2	PBY-5A	28F6420	1
-0	PBY-5A	28F6420	1

REQUIREMENTS PER AIRPLANE

REPLACES — USED Calc. Wt.

REPLACED BY — Act. Wt.

Limit on Dimensions Unless Otherwise Specified: ± 1/32

SCALE 12"=1'-0"

STAMP PART NUMBER WHERE SHOWN

PART No	STOCK	MATERIAL	SPEC.	LH REQ. -0	RH REQ. -0	LH REQ. -2	RH REQ. -2	LH REQ. -3	RH REQ. -3	LH REQ. -4	RH REQ. -4	LH REQ. -5	RH REQ. -5
AN442D4													
Q4303-D4													
28F5477				1				1					
28F6439b-R				1									
28F6434						1							
28F6424				1		1		1		1			
28F6438				1		1				1			
28F6426						1							

PARTS LIST PER ASSY.

AC

NAVY NONE

HEAT TREAT

NONE

FINISH

DRAFT	CHECK	STRUCT	MAT	APPROV	ENG
4/2/42					

NAME ASS'Y-FURN-PILOTS VISUAL INDICATOR OUTER LOCK BRACKET

OPP. HAND NONE

CONSOLIDATED AIRCRAFT CORP. San Diego, Calif.

DWG. SIZE D

28F6432

R

LET	ALTERATION	DATE	BY

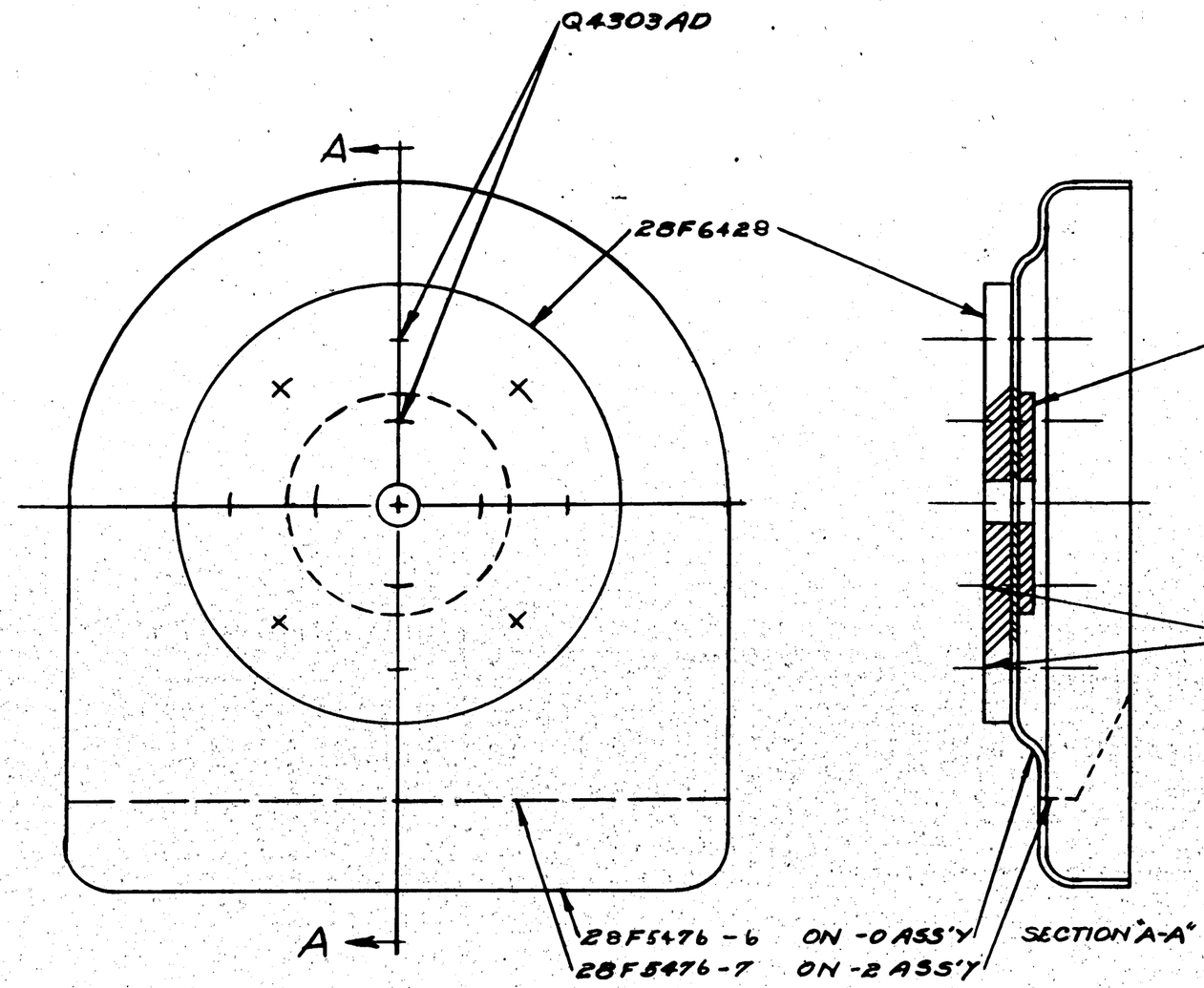

-2	PBY-5A	28F6439	2																		
-0	PBY-5A	28F6439	2	0430304																	
ASSY. DASH NO.	MODEL	NEXT ASSY.	REQ.																		
REQUIREMENTS PER AIRPLANE				28F65477										1		1					
REPLACES			.71 CALC. WT.	28F6428										1		1					
				28F5476-7																	
REPLACED BY			ACT. WT.	28F5476-6										1							
SCALE 12"=1'-0"				PART NO.	STOCK	MATERIAL	SPEC.	LH REQ.	RH REQ.	LH REQ.	RH REQ.	LH REQ.	RH REQ.	LH REQ.	RH REQ.	LH REQ.	RH REQ.				
STAMP PART NUMBER WHERE SHOWN				PARTS LIST PER ASSY.				-0		-2		-3		-4		-5					

AC									
NAVY NONE	NONE		DRAFT	CHECK	STRUCT	MAT	APPROV	ENG.
HEAT TREAT	FINISH							

NAME ASS'Y-FURN-PILOTS VISUAL INDICATOR INNER LOCK BRACKET

OPP. HAND NONE

CONSOLIDATED AIRCRAFT CORP. SAN DIEGO, CALIF.

DWG. SIZE D

28F6433

R

LET	ALTERATION	DATE	BY

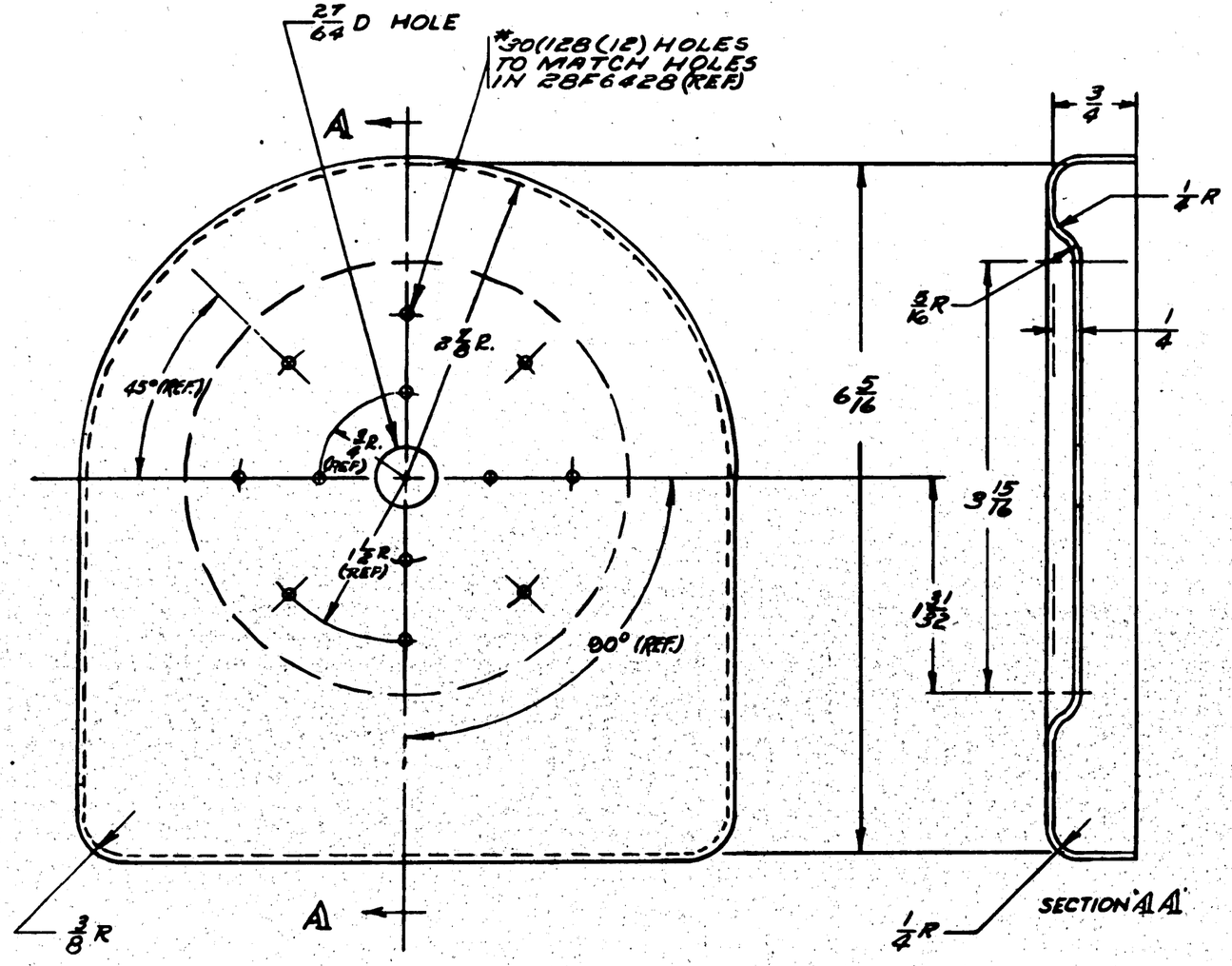

FINISH
2-ANODIZE
P-P-27 PRIMER
GP- GREEN PRIME

ASSY. DASH NO.	MODEL	NEXT ASSY.	REQ.
	PBY-5A	28F6432	4

REQUIREMENTS PER AIRPLANE

REPLACES — CALC. WT. .45

REPLACED BY — ACT. WT.

LIMIT ON DIMENSIONS UNLESS OTHERWISE SPECIFIED: ± .032 ± 1°

SCALE 12"=1'0"

STAMP PART NUMBER WHERE SHOWN

PART NO.	STOCK	MATERIAL	SPEC.	LH REQ.	RH REQ.	LH REQ.	RH REQ.	LH REQ.	RH REQ.	LH REQ.	RH REQ.	LH REQ.	RH REQ.
	.064 X 18½ X 18½	24ST ALC	4788-T	-0		-2		-3		-4		-5	

PARTS LIST PER ASSY.

AC			ROTHER MICH	E.E. LOY					
NAVY NONE	Z-P-GP								
HEAT TREAT	FINISH	DRAFT	CHECK	STRUCT	MAT	APPROV	ENG.		

NAME BRACKET-FURN-PILOTS VISUAL INDICATOR LOCK

OPP. HAND

CONSOLIDATED AIRCRAFT CORP. SAN DIEGO, CALIF.

DWG. SIZE D

28F6434

R

LET	ALTERATION	DATE	BY

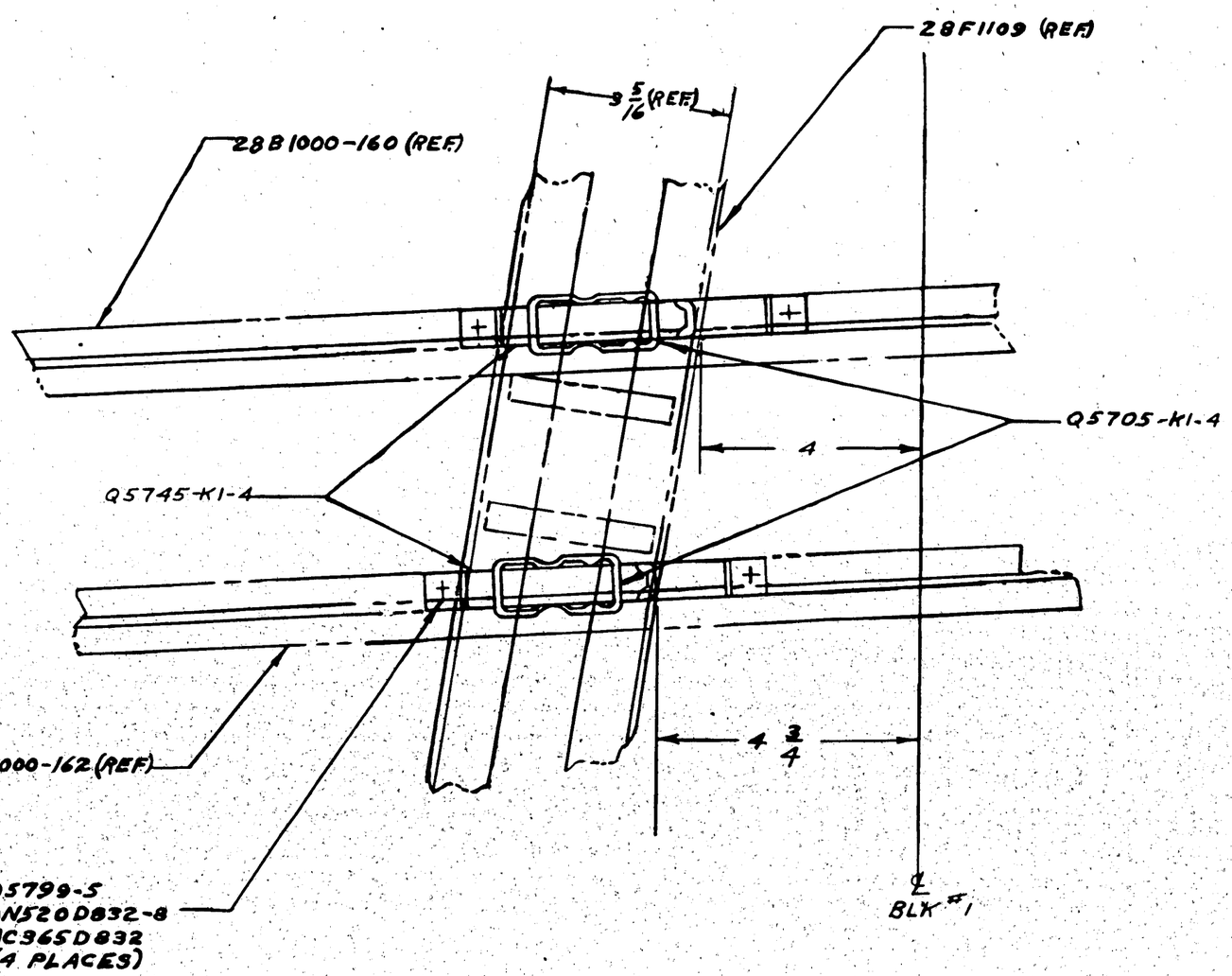

← FORWARD ←

STARBOARD SIDE LOOKING OUTBOARD

(C#88476) #53 & ON

PBY-5A 28F1091 IV

ASSY. DASH No.	MODEL	NEXT ASSY.	REQ'D.

REQUIREMENTS PER AIRPLANE

REPLACES E.O. A72964 — CALC WT. .166

REPLACED BY — ACT. WT.

UNLESS OTHERWISE SPECIFIED ± 1/32 — SCALE 6" = 1'0"

STAMP PART NUMBER WHERE SHOWN

PART No	STOCK	MATERIAL	SPEC.	LH REQ. -6	RH REQ. -2	LH REQ. -3	RH REQ. -4	LH REQ. -5	RH REQ.
Q5799-5								4	
Q5745-K1-4								2	
Q5705-K1-4								2	
AN520D832-8								4	
AC365D832								4	

PARTS LIST PER ASSY.

AC — NAVY NONE — HEAT TREAT — NONE — FINISH

R. MOE 9-1-42 — DRAFT — DRAWING MAN — CHECK — STRESS — MAT — APPROV — SHG

NAME STOWAGE-FURN-BOW GUN PELORUS BASE BRACKET

CONSOLIDATED AIRCRAFT CORP. SAN DIEGO, CALIF.

OFF HAND

DWG. SIZE D — 28F6460

R

LET	ALTERATION	DATE	BY
	BO A1395 PBY-5A, OA-10, 28-5AMC		
A	ADDED TEST PROCEDURE	[illegible]	[illegible]
B	ADDED ASS'Y STORAGE NOTE	[illegible]	[illegible]
	REMOVED PACKING LINEAR PACKING - MARTIN MOULD 777	[illegible]	[illegible]
	3/16 I.D. x 5/8 O.D. PACKING (1)	[illegible]	[illegible]
C	ADDED TO DWG. LINEAR PACKING MARTIN MOULD 777 3/16 I.D. x 5/8 O.D.	5-5-44	[illegible]
D	PBY-5A, OA-10, 28-5AMC 32F676, 28F6507, 28F6506, 28F6508	11-4-44	[illegible]
	28F6506, 28F6503, 28F6502-8		
	28F6502-7, 28F6502-6 W/COIL		
	28F6508 A REQ. EA WAS 1 EA		
E	QTY. PARTS REQ'D. TO 1 EA.		
	ADDED NEXT ASS'Y "28AF6618"		
F	ADDED NOTE: VALVE MUST UNSEAT 1/32 MIN. WHEN PLUNGER IS MOVED ALL THE WAY IN	3-18-44	[illegible]

(B)

1. LUBRICATE ALL PACKING WELL WITH PETROLEUM JELLY BEFORE ASSEMBLY
2. PROVIDE SUITABLE PLUGS FOR ALL OPENINGS TO KEEP INSIDE OF VALVE FREE FROM DIRT AFTER ASS'Y

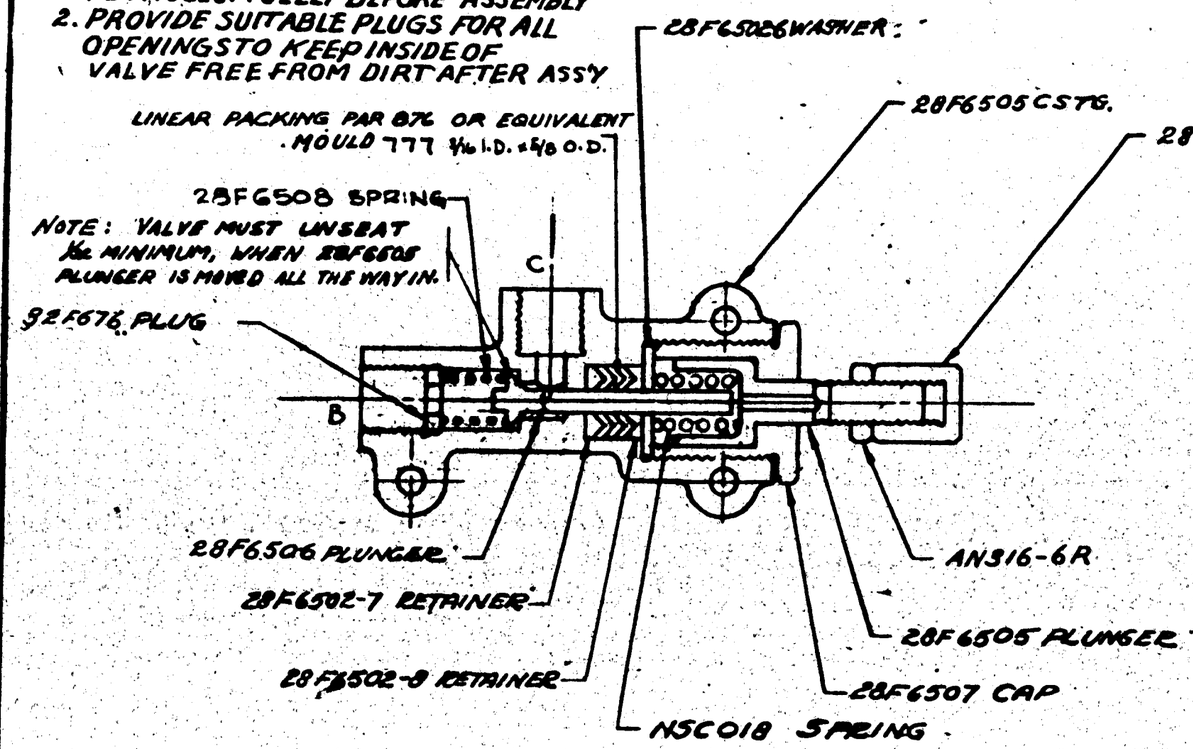

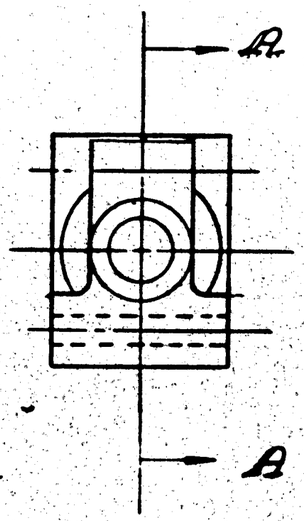

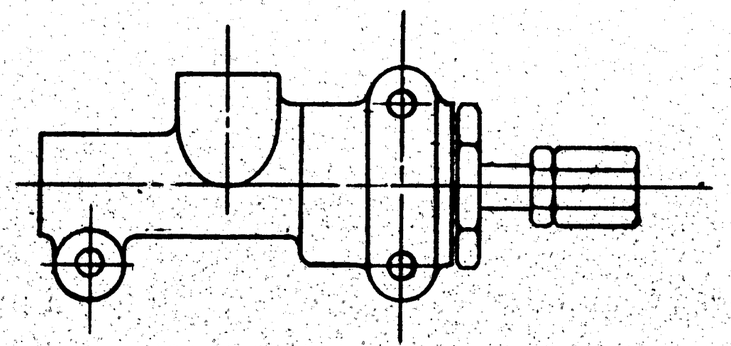

SEC A-A

(A) TEST PROCEDURE

1. PLUG OUTLET AT "B" AND APPLY 2500 P.S.I. AT "C". EXAMINE FOR LEAKS. REMOVE PRESSURE AND OPERATE PLUNGER SEVERAL TIMES TO INSURE FREE OPERATION.
2. WITH "B" UNPLUGGED, APPLY PRESSURE AT "C" OIL SHOULD COME OUT "B" WITH PRESSURE AT "C" NOT OVER 100.
3. WITH "C" UNPLUGGED, APPLY 100 P.S.I. AT "B" NO OIL SHOULD COME OUT "C".
4. VALVE MUST UNSEAT 1/32 WHEN PLUNGER IS MOVED ALL THE WAY IN.- CHECK BY INSERTING SMALL SCALE THROUGH HOLE IN 32F676 PLUG.

ASSY. DASH NO.	MODEL	NEXT ASSY.	REQ.
	28-5AMC	28F6612	
	OA-10	28F6612	
	PBY-5A	28F6612	
	28-5AMC	28F6535	
	OA-10	28F6535	
	PBY-5A	28F6533	

REQUIREMENTS PER AIRPLANE

REPLACES — QTY. REQ'D.

REPLACED BY — ASY. QTY.

SCALE FULL

STAMP PART NUMBER WHERE SHOWN

LINEAR PACKING - PAR 87 MOULD 777

PART NO	STOCK	MATERIAL	SPEC.	LH REQ.	RH REQ.	LH REQ.	RH REQ.	LH REQ.	RH REQ.	LH REQ.	RH REQ.	LH REQ.	RH REQ.
28F6508													
N5C018													
28F6502-7													
28F6502-8													
28F6503													
28F6504													
28F6505													
28F6506													
28F6507													
32F676													
AN316-6R*													

PARTS LIST PER ASSY. -0 -2 -3 -4 -5

A C			8-12-44	[illegible]		[illegible]	[illegible]		
NAVY			[illegible]	[illegible]	[illegible]	[illegible]	[illegible]	[illegible]	[illegible]
HEAT TREAT	FINISH		DRAFT	DESIGN	STRUCT	MAT	[illegible]	[illegible]	

NAME VALVE ASS'Y-NOSE WHEEL SEQUENCE - HYD. SYSTEM

CONSOLIDATED AIRCRAFT CORP. San Diego, Calif.

OPP. HAND

SYM. D DWG. 28F6501

PBY-5A
OA-10, 28-5AMC

E.O. A1396

LET	ALTERATION	DATE	BY
A	ADDED BODY SYSTEM CHANGED [illegible]	[illegible]	[illegible]
	[illegible]		
B	CHGD. [illegible]	7-8-40	CARLSON

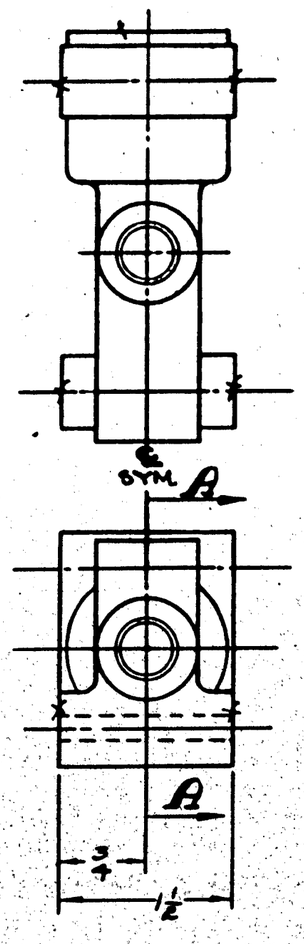

-6 FIRM CASTING

DRILL 17/64 A THRU. 3 HOLES.

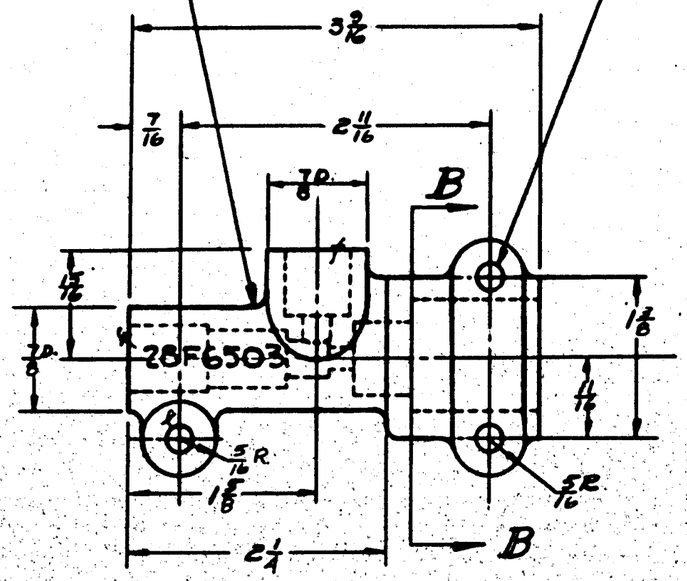

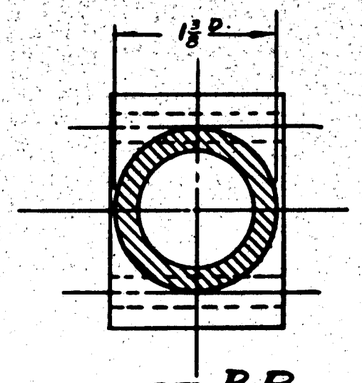

SEC. B-B

DRILL .5084 +.0072 -.0000 TO DEPTH SHOWN (2 PLACES)
TH'D 9/16-20 - PITCH DIA. .5500 +.0013 -.0005 CL 2

UNDERCUT TO DEPTH OF THD

CHAMFER 1/16 X 45°

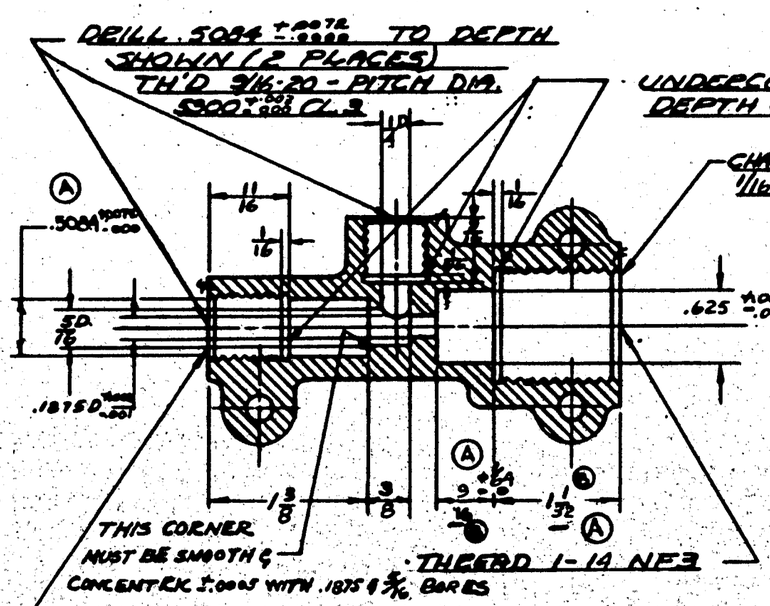

CHAMFER 1/32 X 45° 2 PLACES.

SEC. A-A

NOTES:

ALL RADII 1/8 EXCEPT AS NOTED

CASTING MUST BE SOUND & FREE FROM POROSITY.

FINISH CODE	
Z	ANODIC TREATMENT
P	P-37 PRIMER
AP	ALUMINIZED PRIMER
C	CADMIUM PLATE

ASSY. GROUP NO.	MODEL	NEXT ASSY.	REQ.
	28-5AMC	28F6501	2
	OA-10	28F6501	2
-0	PBY-5A	28F6501	2

REQUIREMENTS PER AIRPLANE

REPLACES — CALC. WT.

REPLACED BY — ACT. WT.

LIST ON ENGINEERING ORDERS UNLESS
+ COSTS 1702
= MACHINE 409
STAMP PART NUMBER WHERE SHOWN

SCALE FULL

PART NO.	STOCK	MATERIAL	SPEC.	LH REQ.	RH REQ.	LH REQ.	RH REQ.	LH REQ.	RH REQ.	LH REQ.	RH REQ.	LH REQ.	RH REQ.
	PARTS LIST PER ASSY.			-0		-2		-3		-4		-5	
-0	FIRM MOULD CASTING	24 ALLOY	4615 CLASS B	1		1		1		1		1	

AC
NAVY 26000 #/D² MIN.
HEAT TREAT

Z-P
FINISH

DRAFT 8-15-40 | CHECK | STRUCT | MAT | APPROV. | DIES

NAME BODY-NOSE WHEEL SEQ VALVE-HYD. SYS.

OPP. HAND

CONSOLIDATED AIRCRAFT CORP. San Diego, Calif.

DWG. SIZE D

28F6503

LET	ALTERATION	DATE	BY
A	CHANGED DIE TO NS 4		
	[illegible] TO .8389 [illegible]		

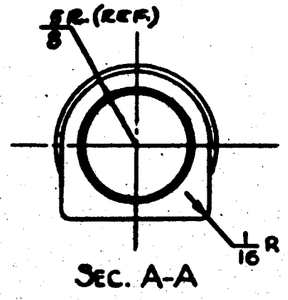

SEC. A-A

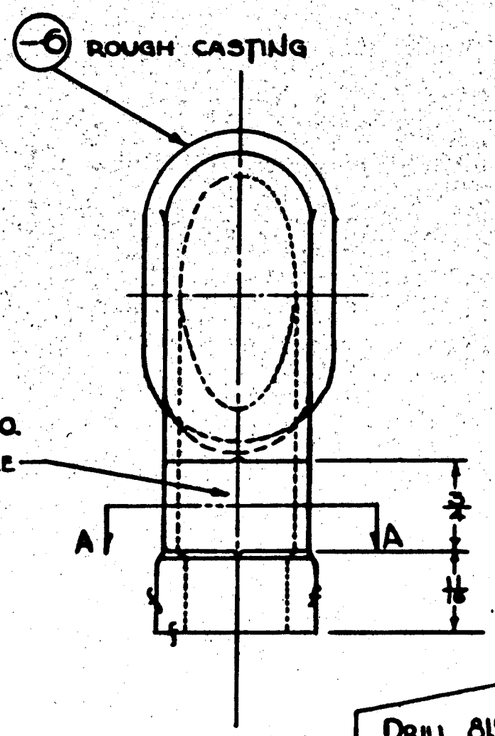

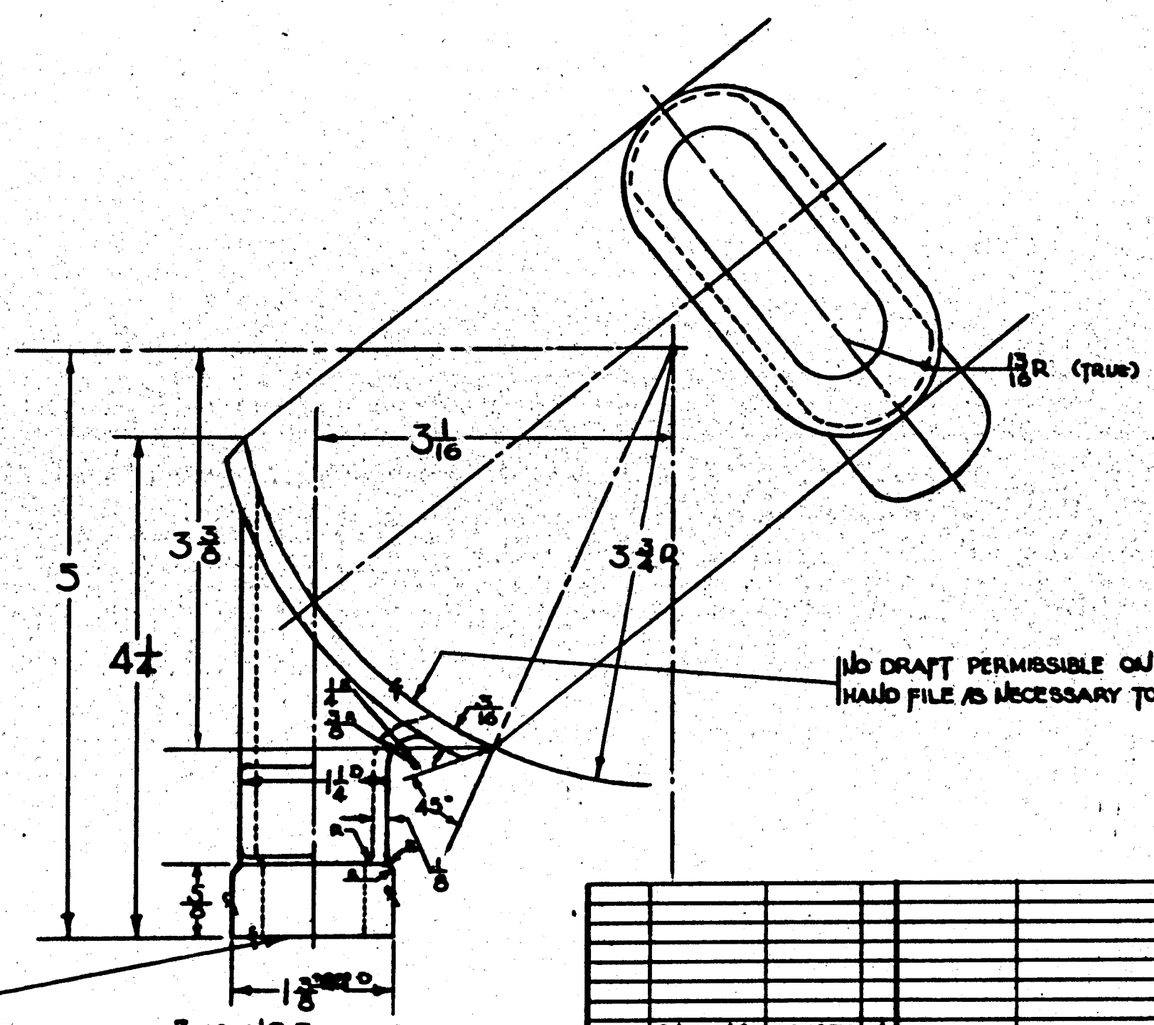

DRILL .815 THRU - TAP $\frac{7}{8}$-10 NS 3.
PITCH DIAMETER .8389 +.0044 -.0000 Ⓐ

NO DRAFT PERMISSIBLE ON THIS SURFACE.
HAND FILE AS NECESSARY TO REMOVE ROUGHNESS.

OA1-10	28F6511	1	
OA-SAGC	"	1	
PBY-5A	"	1	

ASSY. DASH NO.	MODEL	NEXT ASSY.	REQ.

REQUIREMENTS PER AIRPLANE

REPLACES	.10 CAUS. WY.
REPLACED BY	ADV. WY
SCALE	12"-1'-0"
± .5%	

STAMP PART NUMBER WHERE SHOWN

PART No.	STOCK	MATERIAL	SPEC.	LH REQ.	RH REQ.	LH REQ.	RH REQ.	LH REQ.	RH REQ.	LH REQ.	RH REQ.	LH REQ.	RH REQ.
-0			46A1-CL.3	1									
PARTS LIST PER ASSY.				-0		-2		-3		-4		-5	

AC			Casco	Smith	Sam			
NAVY 24,000 PSI	None (To be applied)		9-440					
HEAT TREAT	FINISH		DRAFT	CHECK	STRUCT.	MAT	MFGRY	ENG

NAME FITTING - RESERVOIR - OUTLET - HYDRAULIC SYS.

CONSOLIDATED AIRCRAFT CORP. San Diego, Calif.

OPP. HAND

SIZE D

28F6511

LET	ALTERATION	DATE	BY
A	CHANGED SIZE OF ACCESS [illegible]	[illegible]	
B	[illegible]		
C	[illegible]		
D	[illegible]	[illegible]	
E	E.O.# A48745	[illegible]	
F	E.O.# A51118 CREATED -2 ASSY. INT. CHG. NEG.	[illegible]	

DA-10, BRACKET
8 PER -2A
10 31441
DA-10, P.D.C. 13508
28-5 SMC, PAY-5A

1 DIA. CUTOUT

-12 (REF)

-10 (REF)

VIEW A-A

FOR -2 ASSY.

NOTE
ALL BEND RADII $\frac{1}{8}$ UNLESS OTHERWISE NOTED

AN425 D4 (2 PLACES)

AN442 AD4 4 PLACES

OMIT THIS RIVET ON BOTH SIDES UNTIL INSTALLATION

AN442AD4

ACCESS HOLE THIS SIDE ONLY

DRILL $\frac{17}{64}$ 3 HOLES

$\frac{3}{16}$ R. (TYP)

PICK UP LOCATING HOLES IN -10 TO AN425 D6 (2 PLACES)

AC 366 F428 (WING TYPE) (3)
AN425 AD-3 (C'SINK ON TOP SIDE)
(B)

FOR -0 ASSY.

GP - GREEN PRIME

FINISH CODE	
A	ANODIC TREATMENT
P	PAINT PRIMER
AP	ALUMINIZED PRIMER
C	CADMIUM PLATE

PART NO.	STOCK	MATERIAL	SPEC.		LH REQ. -0	RH REQ. -2	LH REQ. -3	RH REQ. -4	LH REQ. -5	RH REQ.
	AC366F428 (WING TYPE)			3						
AN425AD3										
-2	28-5AMJ 28F6533	/	AN425D6							
-0	28-5AMC 28F6533	/	AN442-AD4							
-2	PAY-5A 28F6533	/	AN425D4							
-12	.064 X 2 7/8 X 12	ALC	47A8-T			1				
-11	.064 X 5 7/8 X 12 5/8	ALC	47A8-T			1				
-10	.064 X 5 7/8 X 14 3/4	ALC	47A8-T			1				
-8	Y2A1BT X 2			2						
-7	.064 X 2 5/8 X 5 7/8	ALCLAD	47A8-T	1						
-6	.064 X 6 X 7 1/4	ALCLAD	47A8-A	1						

APPLY DASH NO.	MODEL	NEXT ASSY	REQ
REQUIREMENTS PER AIRPLANE			
REPLACES			.20 CALC WT.
REPLACED BY			ACT. WT.

SCALE 12" = 1'-0"

STAMP PART NUMBER WHERE SHOWN

AC			
NAVY NONE	ZP-[illegible]GP	11/19/40	J.F.R.
HEAT TREAT	FINISH	DRAFT	STRUCT / MAT / APPROV / ENG.

NAME BRACKET ASSEM. - NOSE WHEEL SEQ. VALVE - HYD. SYST.

OPP. HAND

CONSOLIDATED AIRCRAFT CORP. SAN DIEGO, CALIF.

SIZE D

28F6532

04-10, 28-8 AMC # PDH-5A 9

LET	ALTERATION	DATE	BY
A	1 1/16 DIA. REF 1 3/16 DIA.	4-8-41	[illegible]
B	[illegible] UNDERCUT WAS [illegible]		
	[illegible] INT. CHG. NOTE	[illegible]	[illegible]

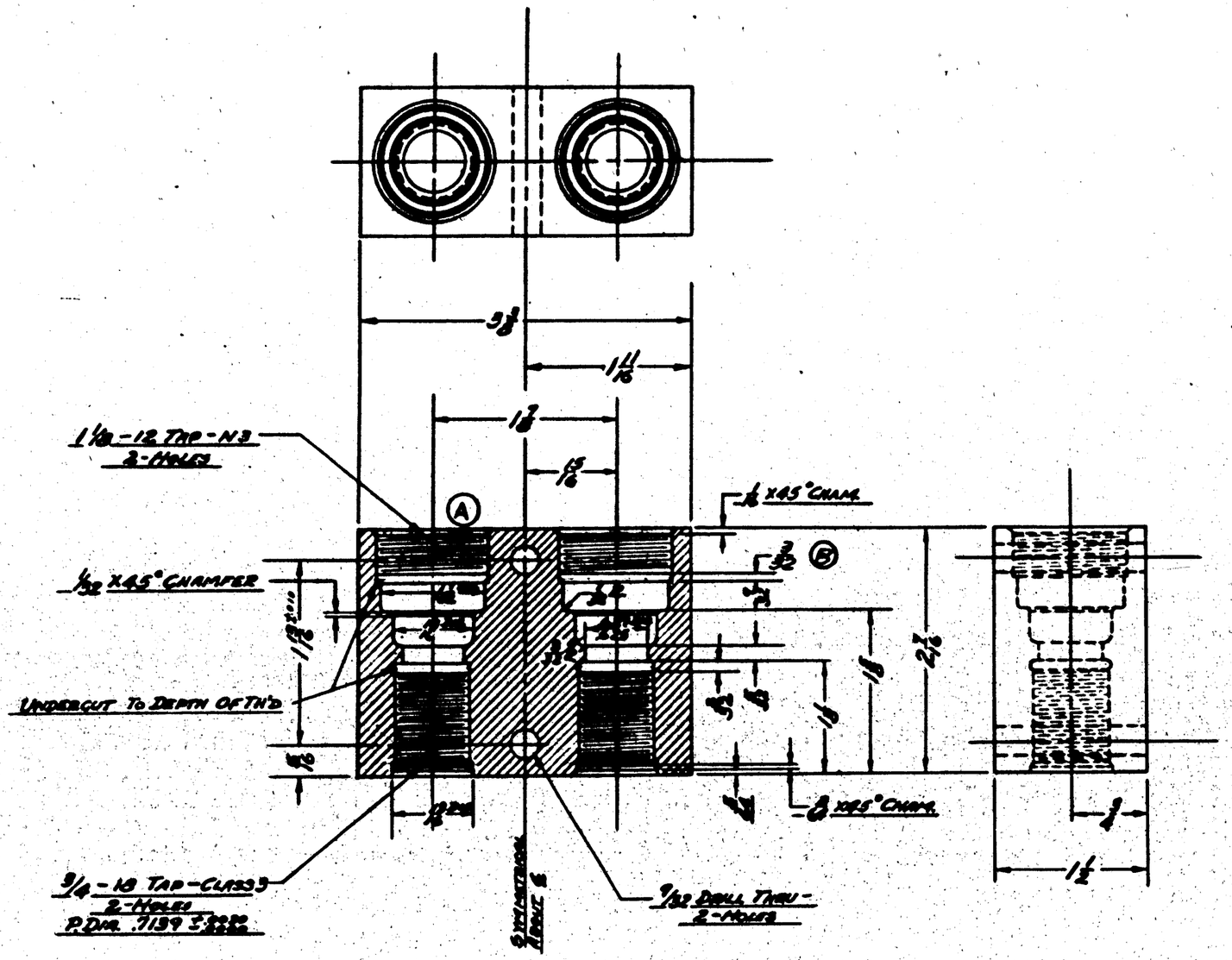

FINISH COL	
Z	ANODIC TREATH
P	P-37 PRIMER
AP	ALUMINIZED PRIM
C	CADMIUM PLAT

ASSY. DASH NO.	MODEL	NEXT ASSY	QUAN
	28-5 MAIN	28F6539	1
	28-10	28F6540	1
	28-5AK	28F6537	1
	28X-5A	28A6539	1

REQUIREMENTS PER AIRPLANE

REPLACES [illegible] .72 CALC QTY.

REPLACED BY [illegible] ASY. QTY

SCALE 12"=1'-0"

STAMP PART NUMBER WHERE SHOWN

PART No.	STOCK	MATERIAL	SPEC.	LH REQ.	RH REQ.	LH REQ.	RH REQ.	LH REQ.	RH REQ.	LH REQ.	RH REQ.	LH REQ.	RH REQ.
	1 7/16 x 2 7/16 x 3 1/2	AL. ALLOY [illegible]	4649-T	-0		-2		-3		-4		-5	

PARTS LIST PER ASSY.

AC		ROGERS	SAILLE	GREEN	NOVAK	FECHL	JWH
NAVY COMD. T	2	[illegible]	[illegible]		JPR		
HEAT TREAT	FINISH	DRAFT	CHECK	STRUCT.	MAT	APPROV.	ENG.

NAME VALVE BODY - TEST STAND
VALVE - HYDRAULIC SYSTEM

CONSOLIDATED AIRCRAFT CORP. San Diego, Calif.

OPP. HAND

SPEC. D

28F6538

LET	ALTERATION	DATE	BY
A	REPLACE DAC 39A992-9 WITH 32B5712-9 ON PACK OF RING & B/M		

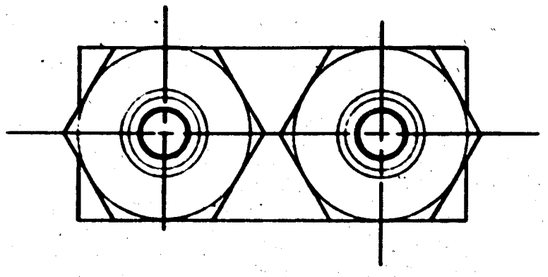

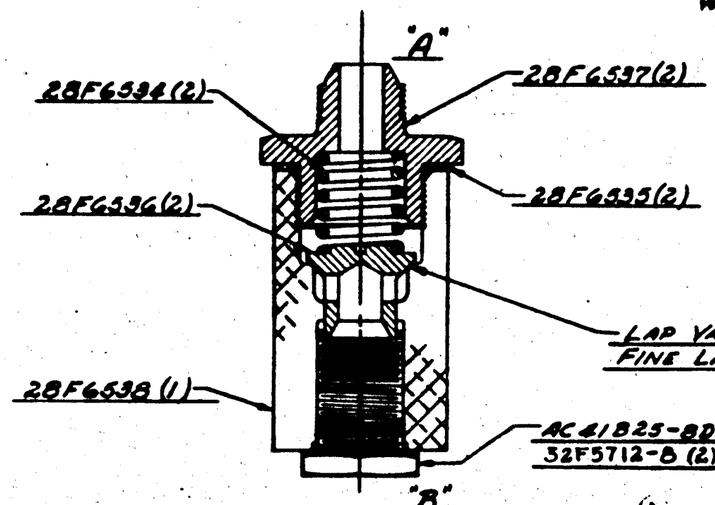

SECTION A-A

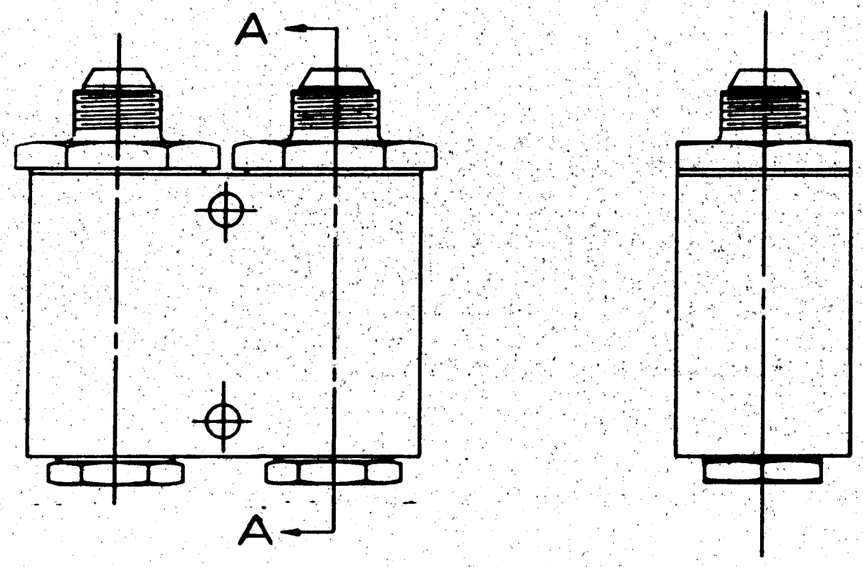

TEST PROCEDURE

1. WITH PLUGS "B" REMOVED, APPLY 2500 LBS HYDRAULIC PRESSURE AT "A". NO LEAKAGE PERMISSABLE AT "B".
2. APPLY 25 LBS HYDRAULIC PRESSURE AT "B" (USE FITTING AC40B379-8D) NO LEAKAGE PERMISSABLE AT "A".

NOTE: THOROUGHLY CLEAN ALL PARTS OF LAPPING COMPOUND ETC. BEFORE ASSEMBLY

ASSY. DASH NO.	MODEL	NEXT ASSY.	REQ.
-0	OA-10	28F6520	1
-0	28-5AMC	28F6520	1
-0	DBY-5A	28F6520	1

REQUIREMENTS PER AIRPLANE

REPLACES — CALC. WT. 1.40

REPLACED BY — ASSY. WT.

LIGHT ON DIMENSIONS UNLESS DIMENSIONAL TOLERANCE SPECIFIED: ± 1/64

SCALE 12"=1'-0"

STAMP PART NUMBER WHERE SHOWN

PART No.	STOCK	MATERIAL	SPEC.	LH REQ.	RH REQ.	LH REQ.	RH REQ.	LH REQ.	RH REQ.	LH REQ.	RH REQ.	LH REQ.	RH REQ.
32F5712-8				2									
AC41B25-8D				2									
28F6534				1									
28F6537				2									
28F6536				2									
28F6535				2									
28F6534				2									

PARTS LIST PER ASSY. -0 -2 -3 -4 -5

AC — NAVY: NONE — HEAT TREAT — NONE — FINISH

DRAFT: Pascoe 1-28-42 — CHECK: [illegible] — STRUCT: [illegible] — MAT: [illegible] — APPROV: [illegible] — ENG: [illegible]

NAME: VALVE ASSEMBLY - TEST STAND VALVE - HYD. SYSTEM

CONSOLIDATED AIRCRAFT CORP. San Diego, Calif.

OPP. HAND

SIZE D — DWG. 28F6539

R

LET	ALTERATION	DATE	BY

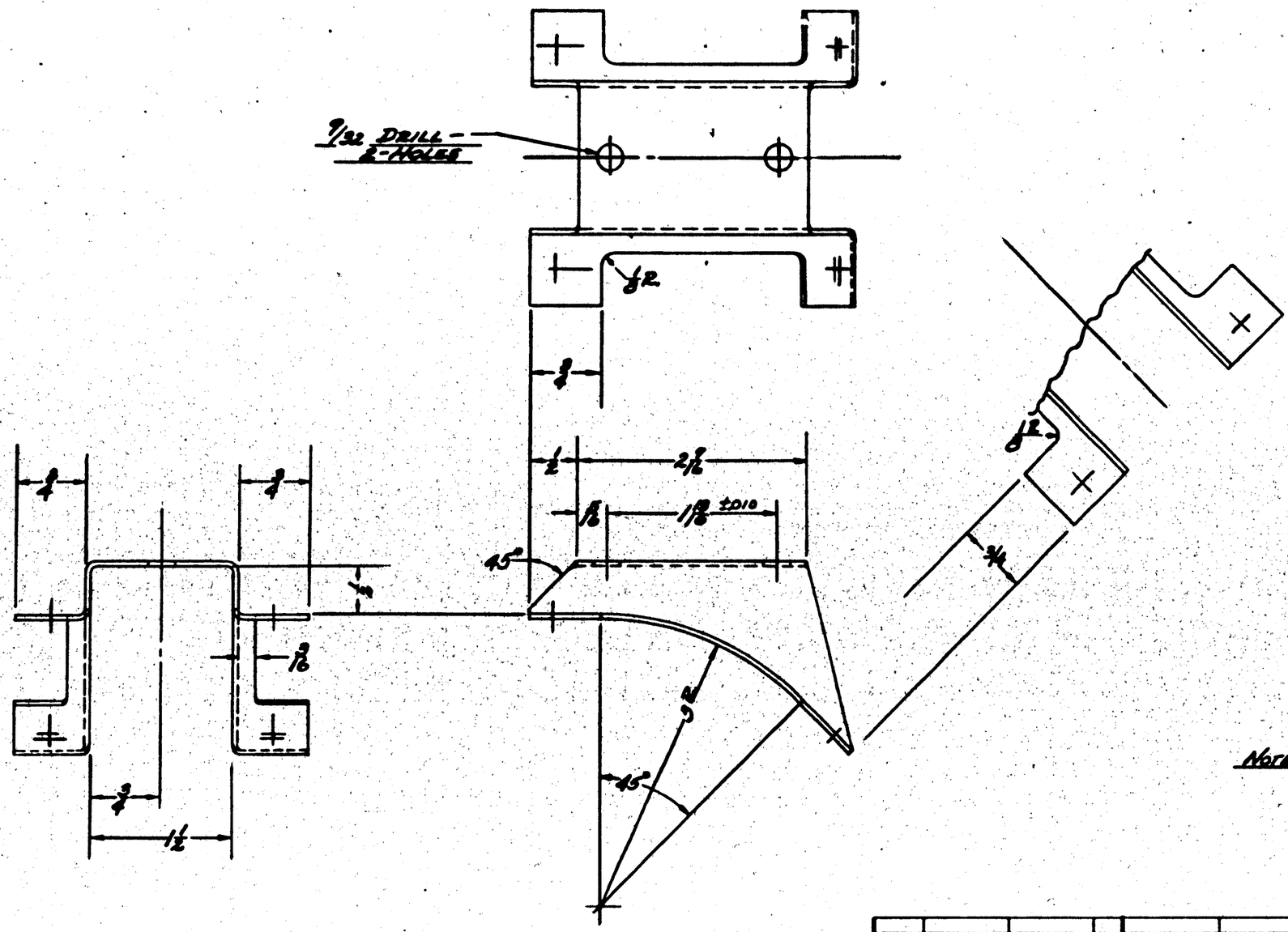

NOTE: ALL BEND RADII TO BE 1/8 R. UNLESS OTHERWISE SPECIFIED.

GP-GREEN PRIME

FINISH CODE	
Z	ANODIC TREATMENT
P	P-07 PRIMER
AP	ALUMINIZED PRIMER
C	CADMIUM PLATE

ASSY. DASH No.	MODEL	NEXT ASSY	REQ.
-0	OA-10	28-0-3855	1
-0	28-SAAC	28-0-3858	1
-0	PBY-5A	28-0-3059	1

REQUIREMENTS PER AIRPLANE

REPLACED — CALC. WT. .067

REPLACED BY — ACT. WT.

+ 1/32 — SCALE 12" = 1'-0"

STAMP PART NUMBER WHERE SHOWN

PART No.	STOCK	MATERIAL	SPEC.	LH REQ.	RH REQ.	LH REQ.	RH REQ.	LH REQ.	RH REQ.	LH REQ.	RH REQ.	LH REQ.	RH REQ.
				-0		-2		-3		-4		-5	
6	.063 X 3 1/8 X 7 1/8	AL. ALLOY	4280 COMM.										

PARTS LIST PER ASSY.

A.C.							
NAVY SR53	ZP2 (GP)		11-29-40		1/2		
HEAT TREAT	FINISH	DRAFT	CHECK	STRUCT.	MAT	APPROV.	ENG.

NAME BRACKET - TEST STAND VALVE - HYDRAULIC SYSTEM

OPP. HAND

CONSOLIDATED AIRCRAFT CORP. SAN DIEGO, CALIF.

SIZE D — 28F6546

LET	ALTERATION	DATE	BY
A	W.R. 8/12, DELETED "M. ALLOY CASTING" SPEC. "AN-QQ-A-390 CL. I" & "T.S. 29,000 P.S.I." WITH "NOTED." ADDED MATL. NOTES 1 & 2. NO FT. CHG.		

FINISH CODE	
Z	ANODIC TREATMENT
P	PRIMER
AP	ALODINE PRIMER
C	CHROMIC PLATE

DBL.-DULL BLK LACQUER

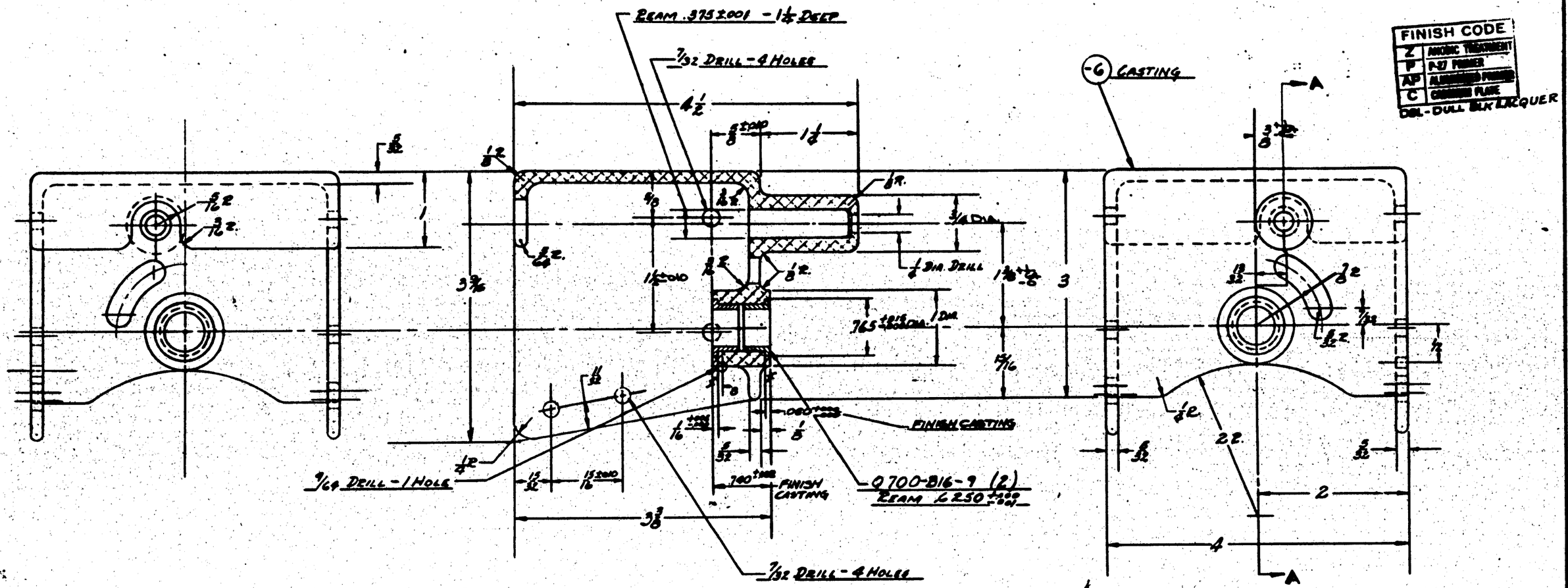

SECT. A-A

MATERIAL NOTE, FOR -6:

(A) 1.- 195 T4 AL. AL. CASTING, SPEC. AN-QQ-A-390 CL. I, T.S. 29,000 P.S.I., DBL
2.- 9195-T6 AL. AL CASTING, SPEC. AN-A-5. CL. II, T.S. 32,000 P.S.I.

ASSY. DASH NO.	MODEL	NEXT ASSY.	QTY.
	28-5AMH	28F6597	1
	OA-10	28F6597	1
	28-6AMR	28F6597	1
	PBY-6A	28F6597	1

REQUIREMENTS PER AIRPLANE

REPLACES — CALC. WT. 78

REPLACED BY — ACT. WT.

LIMIT OF DECIMALS UNLESS OTHERWISE SPECIFIED: ± 1/32 — SCALE 12" = 1'-0"

STAMP PART NUMBER WHERE SHOWN

Q700-B16-9 — 2

PART No.	STOCK	MATERIAL	SPEC.	LH REQ. -0	RH REQ. -2	LH REQ. -3	RH REQ. -4	LH REQ. -5	RH REQ.
-6	NOTED	NOTED	NOTED						

PARTS LIST PER ASSY.

AC							
NAVY NOTED	ZP2DBL	3-6-41		MES			MV
HEAT TREAT	FINISH	DRAFT	CHECK	STRUCT	MAT	APPROV	ENG.

NAME: HOUSING - LANDING GEAR SELECTOR VALVE - HYD. SYSTEM

OPP. HAND

CONSOLIDATED AIRCRAFT CORP. SAN DIEGO, CALIF.

SIZE D — 28F6598

R

LET	DESCRIPTION	DATE	BY
A	CHGD PART NO. -7 FROM 28F6596 TO 28F6599	2-24-41	[illegible]
B	ADD -8 PART NO. AND CHGD -10 FROM 28F6596 TO 28F6599	2-24-41	[illegible]
C	CHGD DIM. FROM 1 1/2 TO 1 5/16	2-24-41	[illegible]
D	REMOVED -9 & ALL DIMS. REVISED IN CONNECTION WITH IT. ADDED -10 PER DRWG. WAS -6	2-24-41	[illegible]

E.O.A 16880

E.O.A 25460

HOLES. WT. CHG. NEG.

AN442-AD5 (3)

1 5/16

1 5/16

5/16

.343 DIA

9/32 DRILL 2 HOLES

9 11/16

2.865 ±.010

1 1/8

11/16

11/32

5/16 DIA

5/16

3/16

3 7/16

13 1/16

2 17/32

1.000 ±.002

11/16

3/4

2.937 ±.010

9/32 DRILL-2 HOLES

3 1/16

1/2

A

A

11/32

15/16

3/8

1 1/8

7/8

7/8

7/8

1 1/2

AN442-AD4 (4)

9/32 DRILL 4 HOLES

-7

-8

B

B

D

D

D

FINISH CODE	
Z	ANODIC TREATMENT
P	A-10 PRIMER
AP	ALUMINIZED FINISH
C	CADMIUM PLATE

GP-GREEN PRIME

Note: Heat Treat SB5B To Cond T.
All SD Material

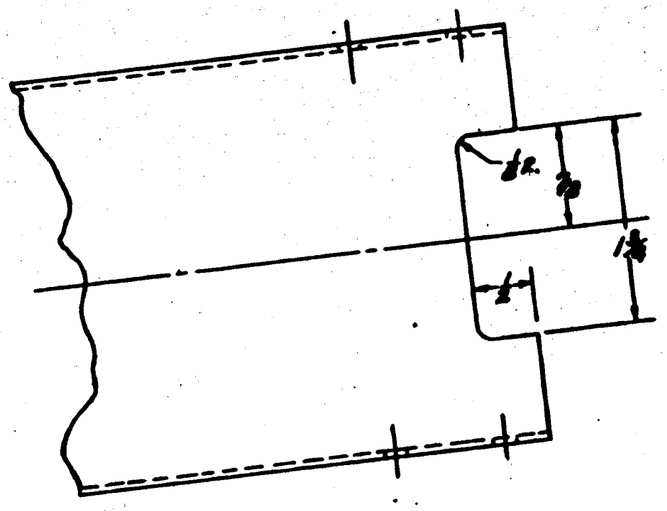

VIEW A-B

ASSY. DASH NO.	MODEL	NEXT ASSY.	REQ.
	28-[illegible]	28F6597	1
	28-[illegible]	28F6597	1
	PBY-5A	28F6597	1

REQUIREMENTS PER AIRPLANE

REPLACES .47 CALC. QTY.

REPLACED BY ACT. QTY.

SCALE 12" = 1'-0"

(FINISH PARTS NUMBERS WHERE SHOWN)

PART NO.	STOCK	MATERIAL	SPEC.	LH REQ.	RH REQ.	LH REQ.	RH REQ.	LH REQ.	RH REQ.	LH REQ.	RH REQ.
PARTS LIST PER ASSY.				-0		-2		-3		-4	-5
-7	K13679 x 1 1/2	AL. ALLOY	46A5 "T"	2							
-8	.051 x 3 1/4 x 12	ALCLAD 2024	SPEC. A	1							
-10	K13624 x 4 1/2	AL. ALLOY	46A5 "T"	1							

AN442-AD5
AN442-AD4

A C		ROGERS	CERTIFICATE FINISH	GREEN	MFG						
NAVY NOTED	2P GP	2-24-41	LINERS								
HEAT TREAT	FINISH	DRAFT	CHECK	STRUCT	MAT	APPROV	ENG				

NAME Support - Landing Gear Selector Valve - Hyd. System

OPP. HAND

CONSOLIDATED AIRCRAFT CORP. SAN DIEGO, CALIF.

DWG. NO. D 28F6599

R

LET	ALTERATION	DATE	BY
A	CHANGED MATERIAL OF -371 FROM ADDED NOTE		

E.O. A SUB
REVISED
AS REQ'D
PER Y-5

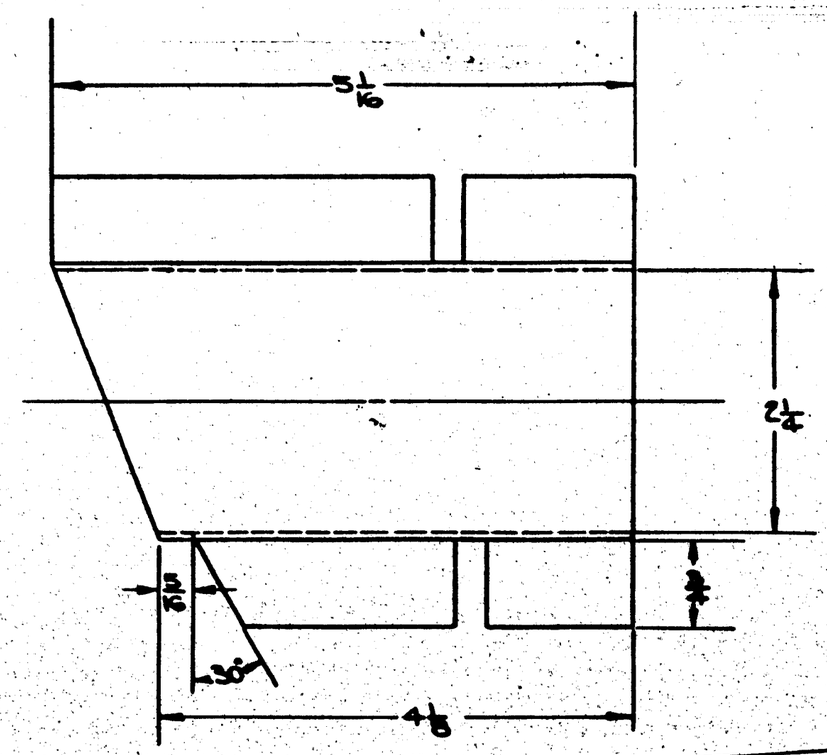

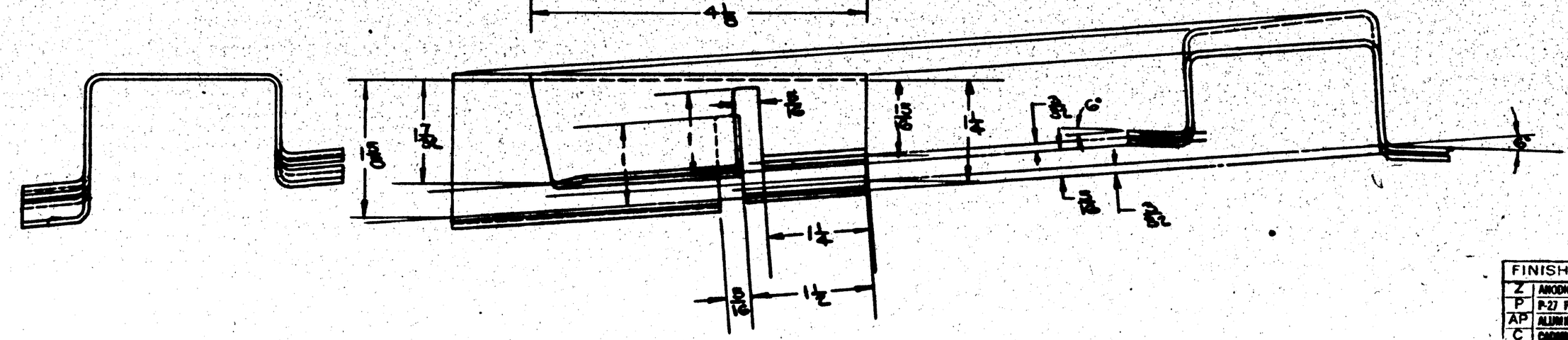

FINISH CODE

Z	ANODIC TREATMENT
P	P-27 PRIMER
AP	ALUMINIZED PRIMER
C	CADMIUM PLATE

NOTE: HEAT TREAT SPEC. (SR-63)
ALL S.O.

ASSY. DASH No.	MODEL	NEXT ASSY.
	28-5AHC	28BAK2 1
	QA-10	28BAK2 1
	PBY-5A	28BAK2 1

REQUIREMENTS PER AIRPLANE

REPLACES .16 CALC. WT.

REPLACED BY ACT. WT.

SCALE 12"=1'-0"

STAMP PART NUMBER WHERE SHOWN

PART NO.	STOCK	MATERIAL	SPEC.	LH REQ. -0	RH REQ. -2	LH REQ. -3	RH REQ. -4	LH REQ.	RH REQ.
(A)-9	2"x5½"xC	4LC2S50	47A5	1					

PARTS LIST PER ASSY.

A C		DRAWN				
NAVY SR53	2PTP	TRACED				
HEAT TREAT	FINISH	DRAFT	CHECK	STRUCT	MAT	APPROV

NAME BRKT. - SEQUENCE VALVE NOSE WHEEL DOOR LOCK-HYD. SYS.

CONSOLIDATED AIRCRAFT CORP. SAN DIEGO, CALIF.

OPP. HAND

SIZE D

28FG611

LET	ALTERATION	DATE	BY
A	IN BILL REPLACED "ALCOA 195T4". SPEC. "AA QQ A CLASS 4." (T.S. 29,000 P.S.I." WITH "NOTED" ADDED MATERIAL- NOTES 1 & 2. NO EFF. CHG.	7-18-42	PLANNER

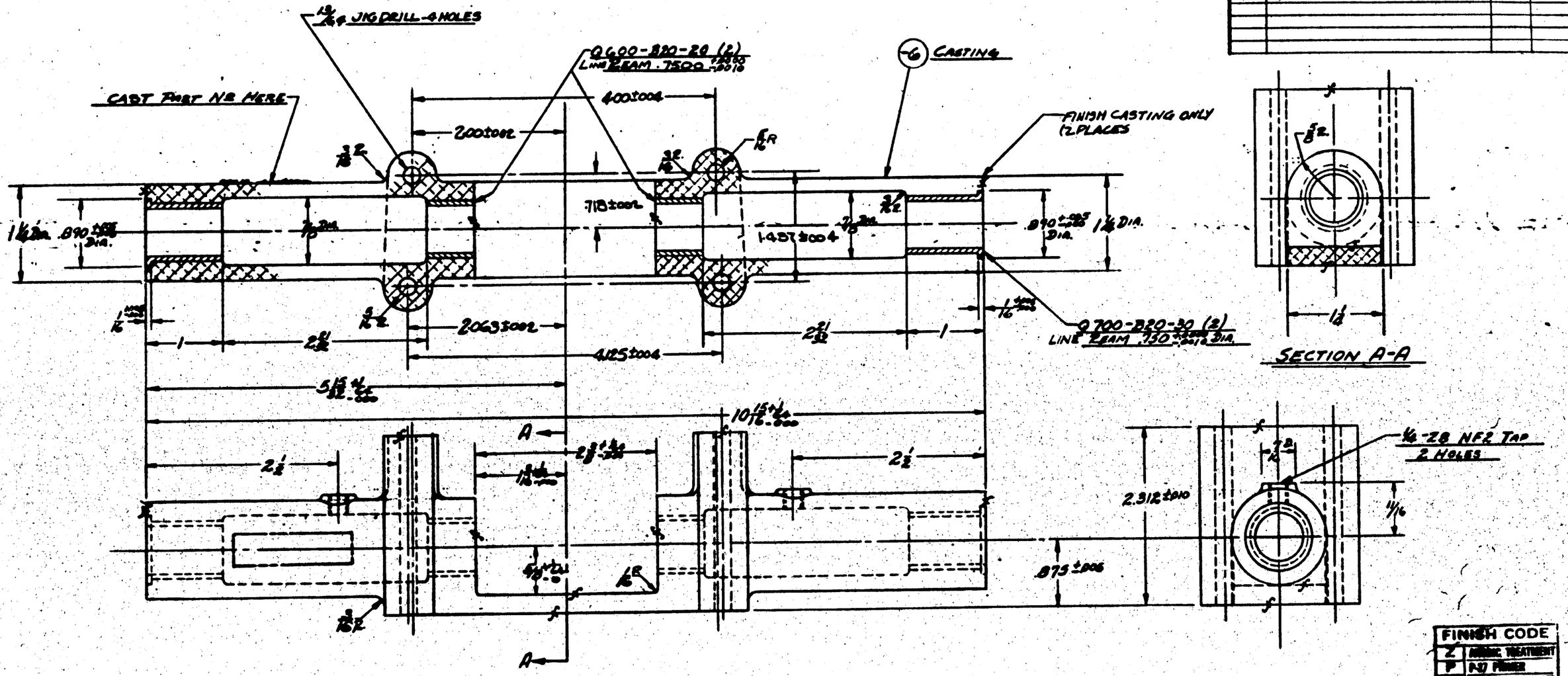

MATERIAL NOTE FOR -6 :

Ⓐ 1.- 195 T4 AL. AL. CASTING, SPEC. AN-QQ-A-390 CL. I., T.S. 29,000 P.S.I., OR
2.- S195T6 AL. AL. CASTING, SPEC. AN-A-5 CL. II, T.S. 32,000 P.S.I.

FINISH CODE	
Z	CHROMIC TREATMENT
P	PRIMER
AP	ALUMINIZED PRIMER
C	CHROMIUM PLATE

ASSY. BASH No.	MODEL	NEXT ASSY.	QUAN.
	28-5AMN	28F6615	1
	OA-10	28F6616	1
	28-5AMC	28F6616	1
	PBY-5A	28F6616	1

REQUIREMENTS PER AIRPLANE

REPLACES — QUAN. WT.

REPLACED BY — ASSY. WT.

SCALE 12"=1'-0" ± 1/32

STAMP PART NUMBER WHERE SHOWN

PART No.	STOCK	MATERIAL	SPEC.	PARTS LIST PER ASSY.	LH REQ.	RH REQ.	LH REQ.	RH REQ.	LH REQ.	RH REQ.	LH REQ.	RH REQ.	LH REQ.	RH REQ.
-6	CASTING	NOTED	NOTED	Q700-B20-30	2	2								
				Q600-B20-20										
					-0		-2		-3		-4		-5	

AC — NAVY NOTED — HEAT TREAT — Z — FINISH

DRAFT 8-2-42 — CHECK — STRUCT — MAT — APPROV — ENG.

NAME Bearing - Nose Wheel Door Lock Mechanism - Hyd. System

OPP. HAND

CONSOLIDATED AIRCRAFT CORP. SAN DIEGO, CALIF.

SIZE D — 28F6613

R

LET	ALTERATION	DATE	BY
	ADDED 28F6630-8 TO FACE DWG. (28F6630 ASSY)		
B	ADDED NOTE 4.	8-27-	
C	CHANGED PACKING & LINEAR. 3-27-		
	V40 V41 Y		
D	ADDED TO PART NUMBER ON		
	DRAWING ADDED NOTE		
	NUMBER 5. (NEG WT. CHG)		

E.O.* A2G764

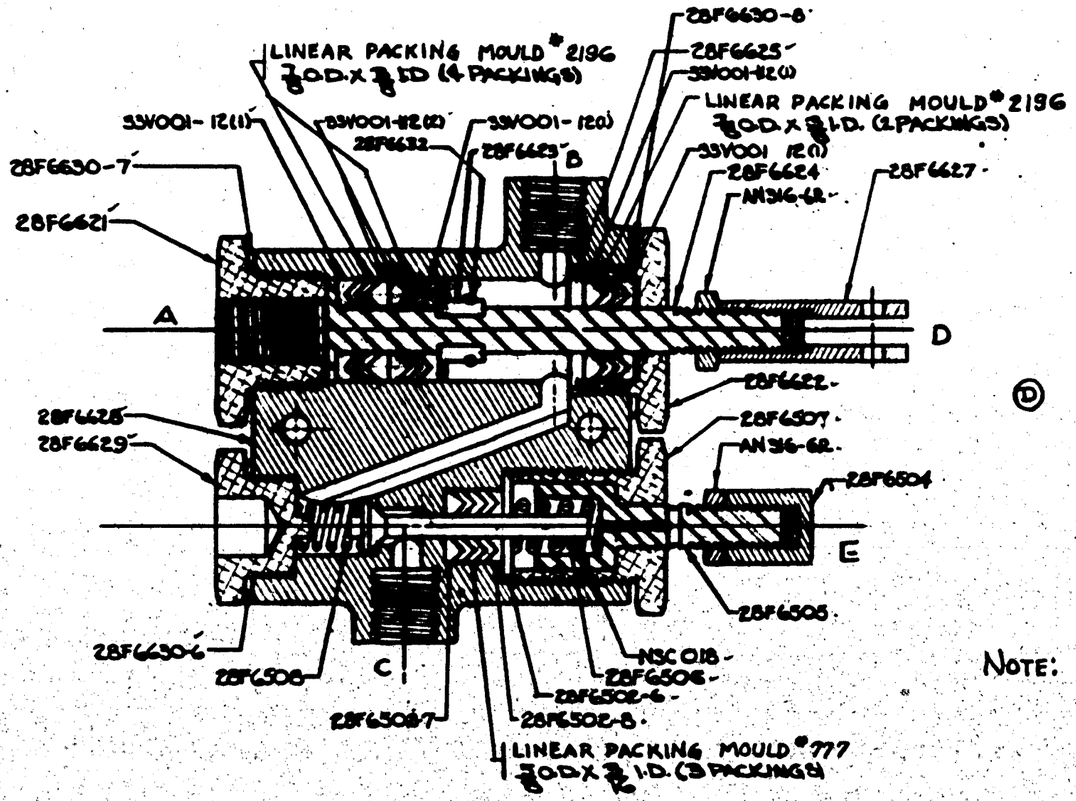

NOTES: (CONT'D)

(D) 3. USE Q7102-AL10 WASHERS (NOT MORE THAN THREE) BETWEEN 28F6502-6 RING & 28F6502-8 PACKING GLAND. USE JUST ENOUGH WASHERS TO INSURE SNUG FIT OF PACKING.

NOTE: LINEAR PACKING MAY BE PURCHASED FROM LINEAR PACKING AND RUBBER CO PHILADELPHIA PENNA.

PURCHASE TO DWG.

PURCHASE OUTSIDE (SUPERIOR MACHINE CO.) SAN DIEGO

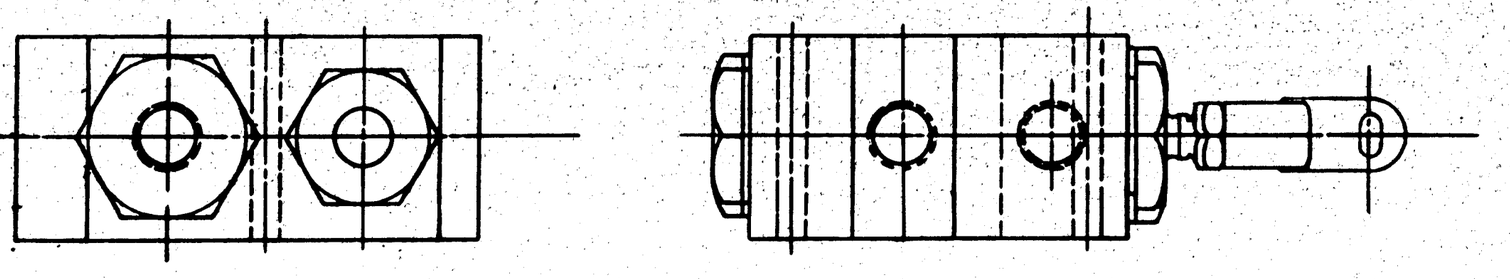

TEST PROCEDURE

1. APPLY 2500 P.S.I. AT "A". NO LEAKAGE IS PERMISSIBLE.
2. APPLY PRESSURE AT "B" AND PISTON "D" SHOULD RETRACT. INCREASE PRESSURE AT "B" TO 2500 P.S.I. WITH "A" & "C" OPEN. NO LEAKAGE IS PERMISSIBLE AT "A". LEAKAGE AT "C" NOT TO EXCEED 10 DROPS PER MINUTE MAXIMUM.
3. APPLY 1000 P.S.I. AT "B". PUSH PLUNGER "E" IN AND FLUID SHOULD COME OUT AT "C". WHEN PLUNGER "E" IS ALLOWED TO COME OUT, "C" SHOULD SHUT OFF WITH NO LEAKAGE.
4. PLUG OUTLET "B". APPLY 5 P.S.I. AT "A" AND HOLD FOR 5 MINUTES, OPERATING PLUNGER "E" SEVERAL TIMES AND CHECK FOR LEAKAGE.

NOTE.

1. LUBRICATE ALL PACKING WELL WITH PETROLEUM JELLY BEFORE ASSEMBLY.
2. PROVIDE SUITABLE PLUGS FOR ALL OPENINGS TO KEEP INSIDE OF VALVE FREE FROM DIRT AFTER ASSY.

(CONTINUED)

ASSY. DASH No.	MODEL	NEXT ASSY.	REQ.
	28-5AMN	28F6618	1
	28-5AMC	28F6618	1
	P&Y-5A	28F6618	1

REQUIREMENTS PER AIRPLANE

REPLACES

REPLACED BY

2.50 CALC WT.

ACT. WT.

SCALE 12" = 1'-0"

STAMP PART NUMBER WHERE SHOWN

PART No.	STOCK	MATERIAL	SPEC.	LH REQ. -0	RH REQ. -2	LH REQ. -3	RH REQ. -4	LH REQ. -5	RH REQ.
LINEAR PACKING - 3/8 I.D. x 7/8 O.D.						6 MAKE.			
LINEAR PACKING - 3/4 I.D. x 1 1/4 O.D.							5 MAKE.		
Q7102-AL10				3					
NSC018				1					
AN316-6R				2					
33V001-11R				3					
33V001-12				3					
28F6632				1					
28F6630-8				1					
28F6630-7				1					
28F6630-6				1					
28F6628				1					
28F6629				1					
28F6627				1					
28F6625				1					
28F6624				1					
28F6623				1					
28F6622				1					
28F6621				1					
28F6508				1					
28F6507				1					
28F6506				1					
28F6505				1					
28F6504				1					
28F6502-8				1					
28F6502-7				1					
28F6502-6				1					

PARTS LIST PER ASSY.

			DRAWN	CHECK	STRUCT	MAT	APPROV	ENG.
A.C.								
NAVY			4-24					
HEAT TREAT	FINISH		DRAFT					

NAME ASSY - JACK & SEQUENCE VALVE - N.W. DOOR LOCK - HYD. SYS.

CONSOLIDATED AIRCRAFT CORP. SAN DIEGO, CALIF.

OPP. HAND

DWG. D SIZE

28F6619

LET	ALTERATION	DATE	BY
A	5/8 WAS 5/8 & .797 WAS 13/16 & 3/4	5-21-41	A.E.N.
B	ADDED DET. 'B' & REVISED NOTE 2	6-12-41	Simmons
C	ADDED SERRATIONS	6-26-41	Hartley
D	CHG'D DIM. 4.00 ± .015 WAS 3 5/16 ± 1/16		
	WAS 5/8. JO WT. CHG	9-23-42	Stubblin

E.O. 5102

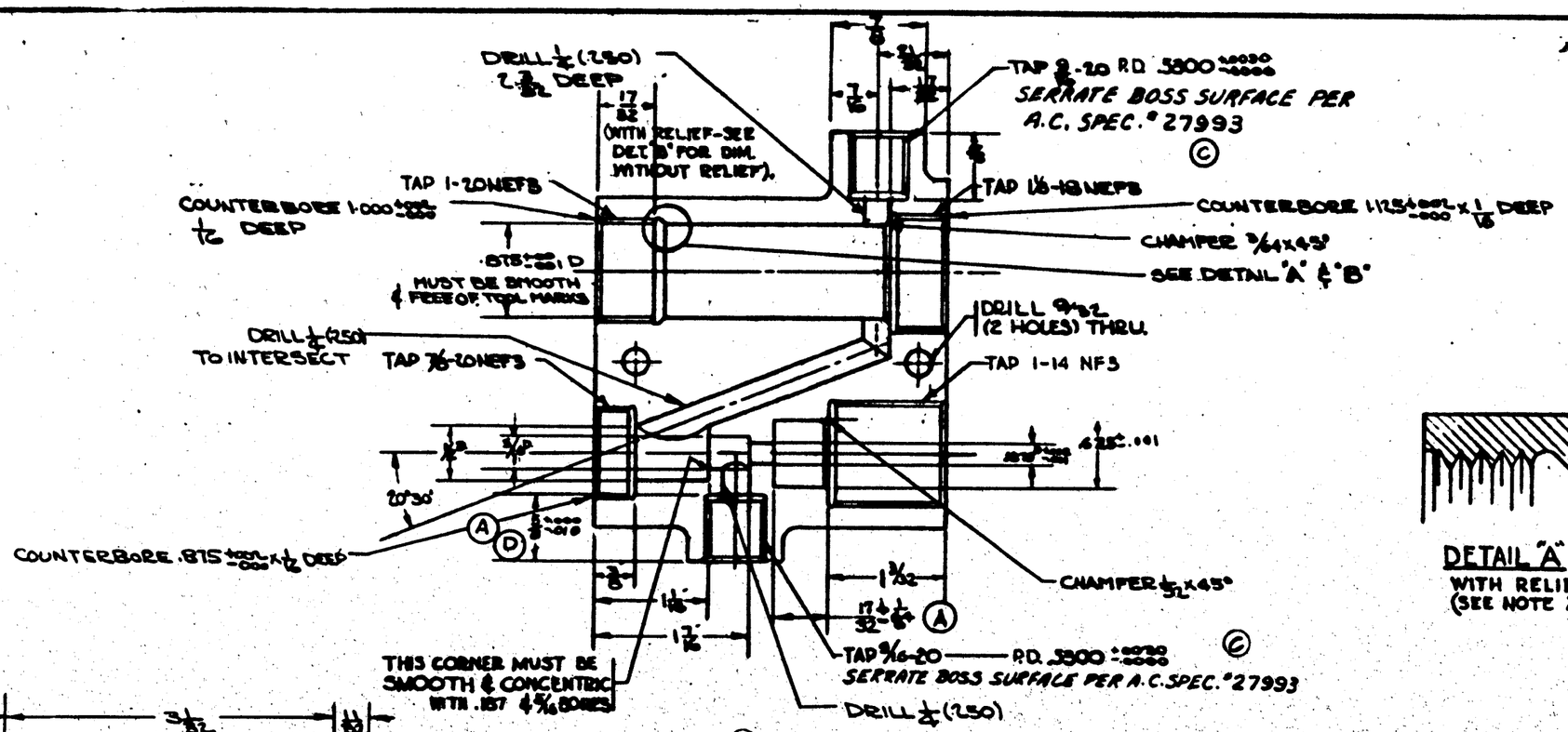

DETAIL "A"
WITH RELIEF
(SEE NOTE 2)

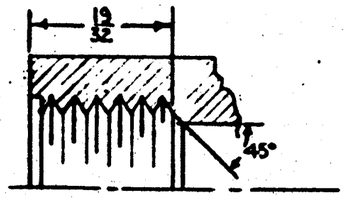

DETAIL "B"
WITHOUT RELIEF
(SEE NOTE 2)

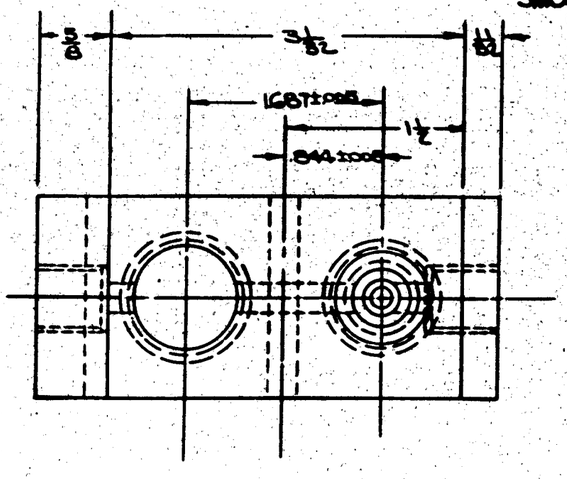

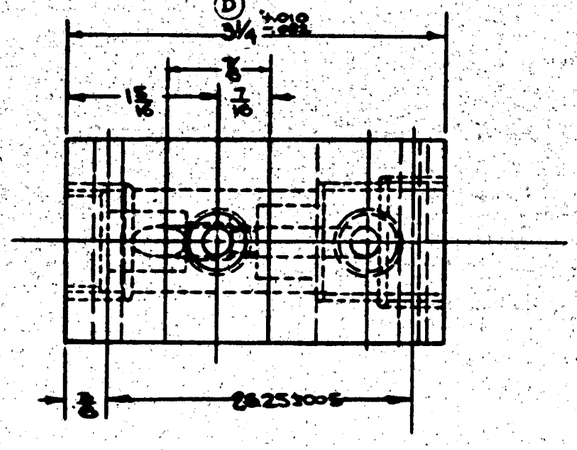

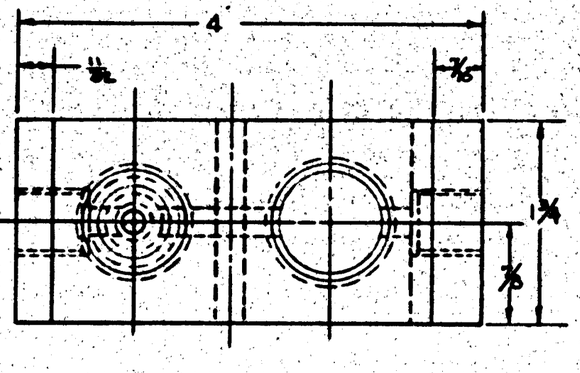

FINISH CODE	
Z	ANODIC TREATMENT
P	P-17 PRIMER
AP	ALUMINIZED PRIMER
C	CADMIUM PLATE

PURCHASE TO DWG.

PURCHASE OUTSIDE (SUPERIOR MACHINE CO) SAN DIEGO

NOTES:-

(B)
1. COUNTERSINK ALL TAPPED HOLES 110° x DIA. OF THREAD UNLESS OTHERWISE INDICATED
2. RELIEVE BOTTOM OF TAPPED HOLES BY 1/16 BY DIA. OF THD. AS SHOWN. DO NOT RELIEVE THDS IF NOT REQ'D TO PERMIT MACHINING.
3. REMOVE ALL BURRS & ROUGH EDGES FROM INTERSECTION OF HOLES.
4. OPTIONAL MATERIAL - 17ST OR 14ST ALUM. ALLOY.
5. ALL EXTERNAL RADII - 1/8.

ASSY. DASH NO.	MODEL	NEXT ASSY.	REQ.
	28-54MC	28F6618	1
	28-5AMN	28F6619	1
	PRY-5A	28F6612	1

REQUIREMENTS PER AIRPLANE

REPLACES — CALC. WT. 1.52

REPLACED BY — ACT. WT.

LIMIT OR DIMENSIONS UNLESS OTHERWISE SPECIFIED: ± .010 ± 1/2°

SCALE 12" = 1'-0"

STAMP PART NUMBER WHERE SHOWN

PART NO.	STOCK	MATERIAL	SPEC.	LH REQ.	RH REQ.	LH REQ.	RH REQ.	LH REQ.	RH REQ.	LH REQ.	RH REQ.	LH REQ.	RH REQ.
	X 3/8 x 4 x 1 3/4	ALCLAD 24S	AMS-QQ-A-250/4 T	-9		-2		-3		-4		-5	

PARTS LIST PER ASSY.

A.C.			CLEAR							
NAVY NONE	Z		2-28-41	4-2-41						
HEAT TREAT	FINISH		DRAFT	CHECK	STRUCT	MAT	ARMAM	ENG.		

NAME HOUSING - JACK & SEQUENCE VALVE - N.W. DOOR LOCK - HYD. SYS.

CONSOLIDATED AIRCRAFT CORP. SAN DIEGO, CALIF.

OPP. HAND

SIZE D — 28F6628

LET	ALTERATION	DATE	BY
A	MAKE -8 FROM .032 2024-T3 ALCLAD		
	MAKE -6 FROM .032 2024-T3 ALCLAD		
	[illegible]		
	[illegible]		
B	CHG -8 1/2 FROM .032 2024-T3 ALCLAD TO .025		
	[illegible]		

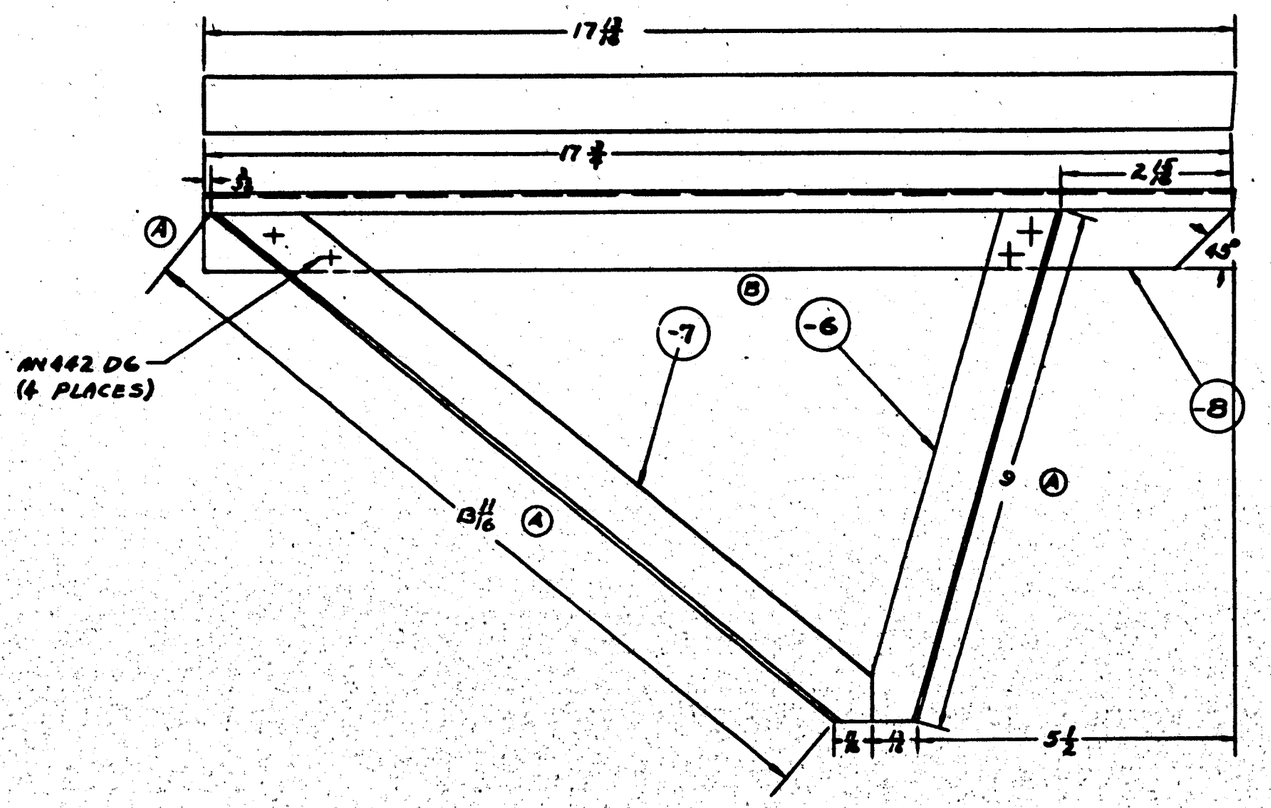

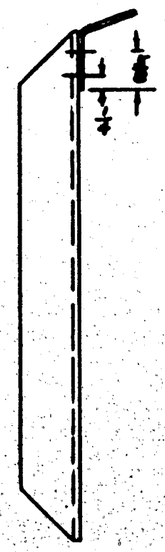

A

RUSH RELEASED 10-25-41

EFFECTIVE ON #168 TO #200, & 70486
" " #1 TO 3 INCL. & 77713
EFF. S.O. 936-53-6 (10-1-41)

FINISH CODE

Z	[illegible]
P	PAT PRIMER
AP	ALCLADDED PRIMER
C	CHROMIUM PLATE

AN442 D6

PART No.	STOCK	MATERIAL	SPEC.	LH REQ. -0	RH REQ. -0	LH REQ. -2	RH REQ. -3	LH REQ. -4	RH REQ. -4	LH REQ. -5	RH REQ. -5
-8R	K155 7X18	AL. 24ST	46A9-T		1						
-8L	K165 7X18	AL. 24ST	46A9-T	1							
-7R	Y2A47T x 14 1/2	ALC. 24ST	47A8-T		1						
-7L	Y2A47T x 14 1/2	ALC. 24ST	47A8-T	1							
-6R	Y2A47T x 9 3/4	ALC. 24ST	47A8-T		1						
-6	Y2A47T x 9 3/4	ALC. 24ST	47A8-T	1							

PARTS LIST PER ASSY.

ASSY. DASH NO.	MODEL	NEXT ASSY.	REQ.
-R	PBY-5A	[illegible]	1
-L	PBY-5A	[illegible]	1

REQUIREMENTS PER AIRPLANE

REPLACES .75# CALC. WT.

REPLACED BY ASY. WT.

LIMIT ON DIMENSIONS UNLESS OTHERWISE SPECIFIED: ± 1/32 — SCALE 6"=1'-0"

STAMP PART NUMBER WHERE SHOWN

AC

NAVY NONE — Z-P-2[illegible]

HEAT TREAT — FINISH

DRAFT [illegible] CHECK [illegible] STRUCT [illegible] ENG. [illegible] APPROV [illegible] ENG. [illegible]

NAME BRACE ASS'Y- FURNS- PILOT'S ARMORED SEAT SUPPORT

OPP. HAND 28F6652-R

CONSOLIDATED AIRCRAFT CORP. SAN DIEGO, CALIF.

SIZE D — DWG. 28F6652

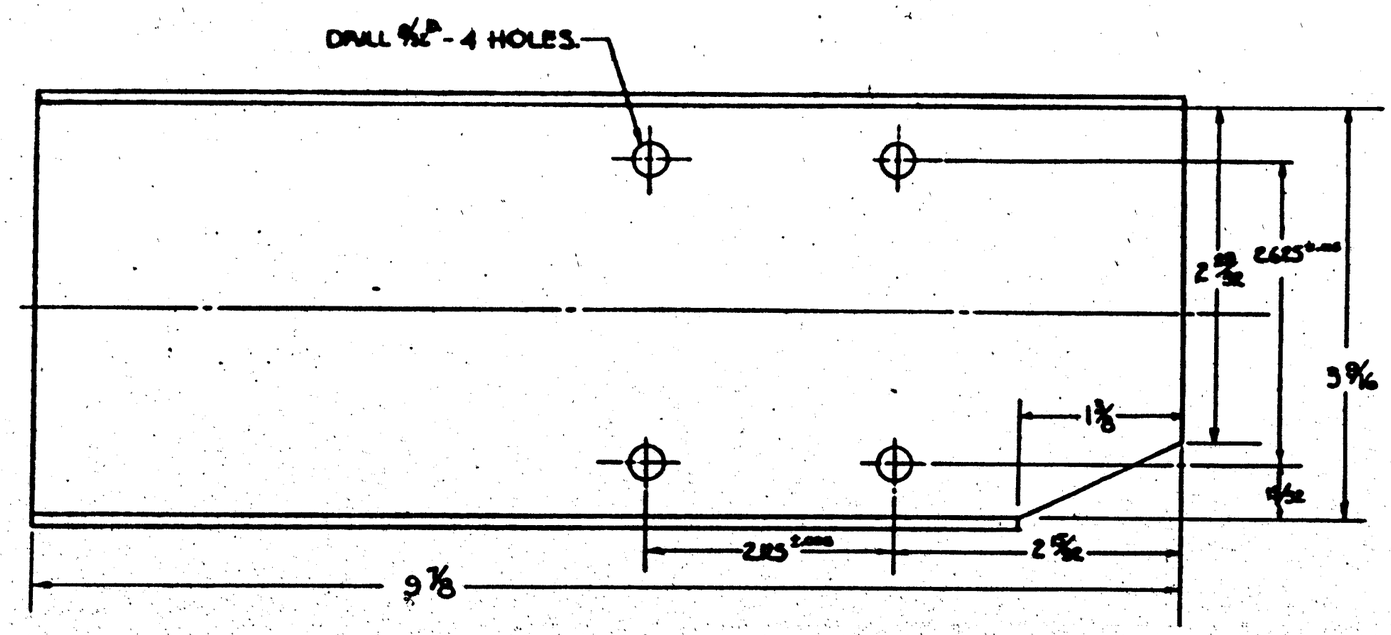

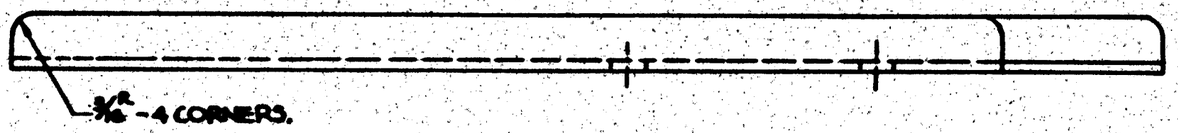

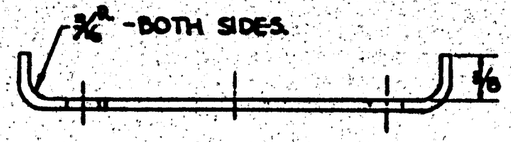

FINISH CODE	
Z	
F	NO Finish
AP	
C	

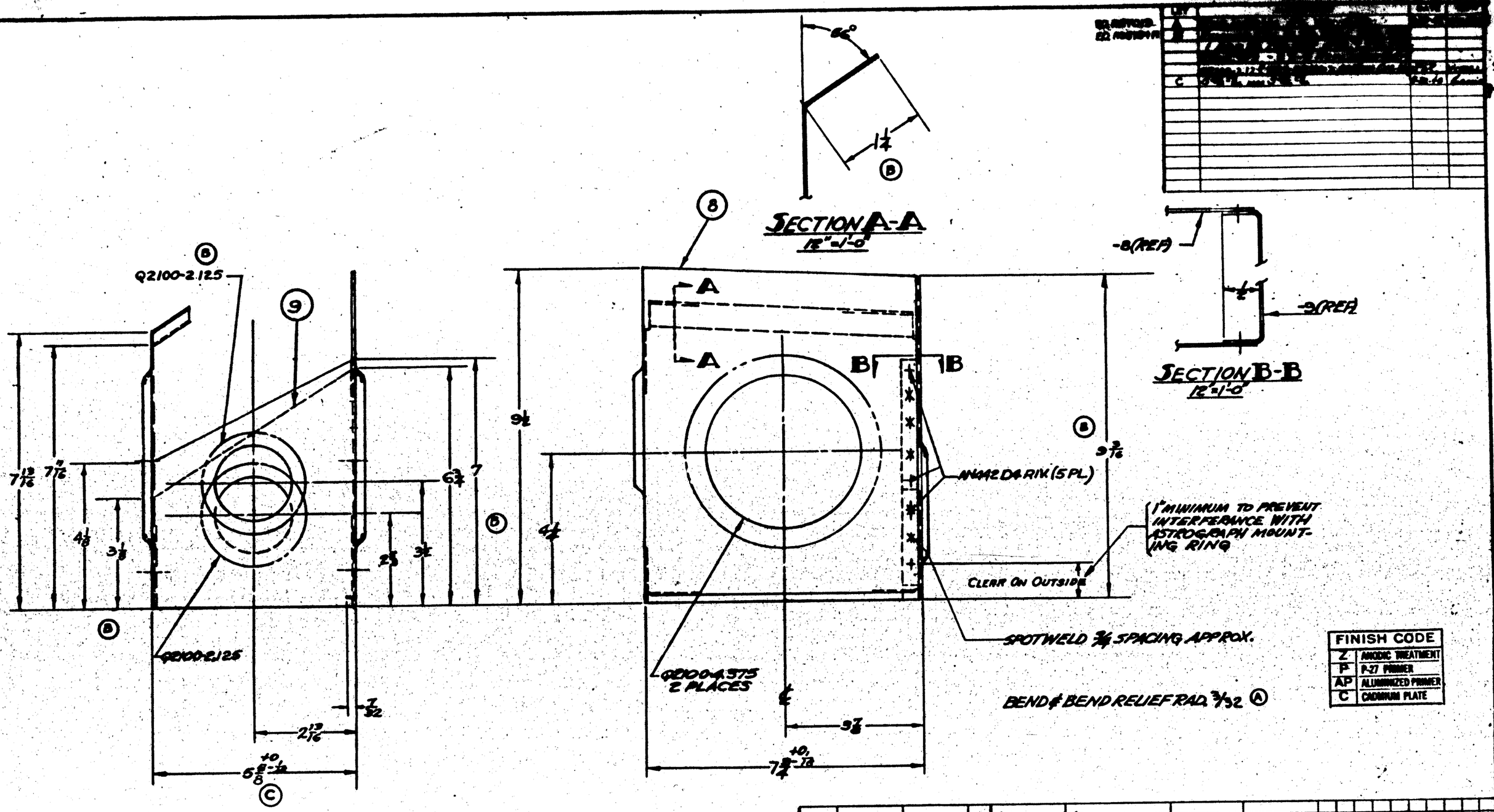

FINISH CODE	
Z	ANODIC TREATMENT
P	P-27 PRIMER
AP	ALUMINIZED PRIMER
C	CADMIUM PLATE

C-88476
C-91876

ASSY. DASH NO.	MODEL	NEXT ASSY.	REQ.
-0	PBY-5A	28F6675	1
-0	PBY-5	"	1
-0	PBY-5B	28F6675-0	1

REQUIREMENTS PER AIRPLANE: AN442D4

PART No.	STOCK	MATERIAL	SPEC.	LH REQ.	RH REQ.	LH REQ.	RH REQ.	LH REQ.	RH REQ.	LH REQ.	RH REQ.	LH REQ.
				-0	-2	-3	-4	-5				
-9	.040 X 7 7/8	24ST ALC.	47A8-T	1								
-8	.040 X 10 X 21 1/2	24ST ALC.	47A8-T	1								

PARTS LIST PER ASSY.

DISPLACES: .75 Cad. Wt.
DISPLACED BY: Ass'y. Wt.
STAMP PART NUMBER WHERE SHOWN: 1/32 R 132 Mated; Cad. Plate Mated

A.C. —
NAVY NONE
HEAT TREAT
FINISH: Z-AFTER SPOTWELD
LIMIT MADE: ±1/64
DRAFT: 12-24-41
CHECK: 1/6/42
STRUCT.
MAT.
APPROV.
B.R.
GRAND APP'V
ENG.

NAME: SUPPORT ASSY-FURN. ASTROGRAPH
OPP. HAND: NONE
DWG. D 28F6670
CONSOLIDATED AIRCRAFT CORP. SAN DIEGO, CALIF.

28F6670

LET	REVISIONS	DATE	BY
A	[illegible]		
B	[illegible]		
C	[illegible]		
	DATE, W.P. CHG. NOS.		

S.O. A74767

S.O. A91428

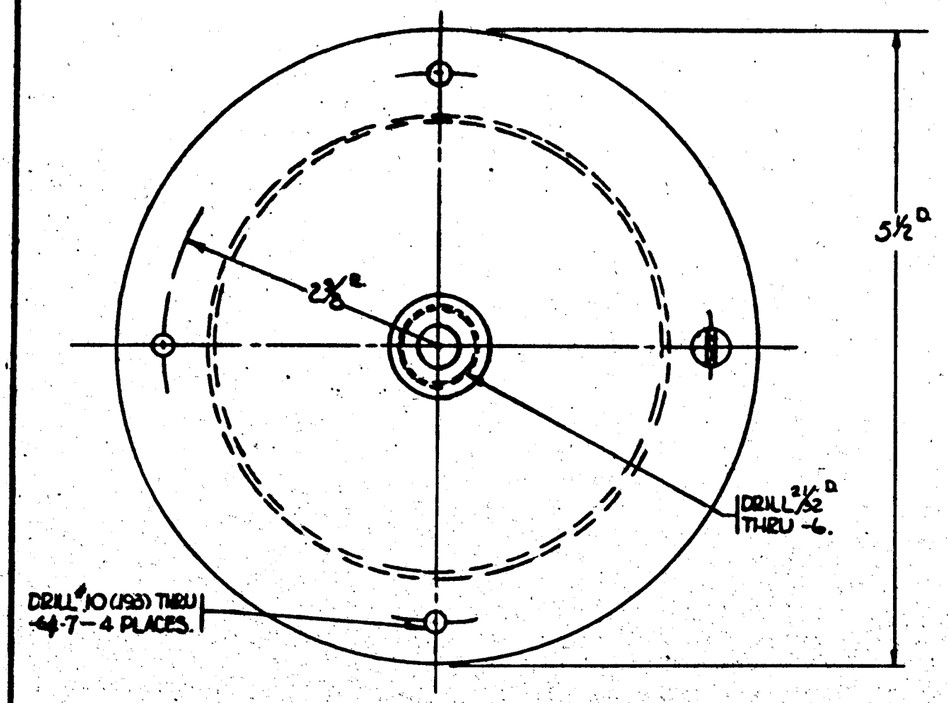

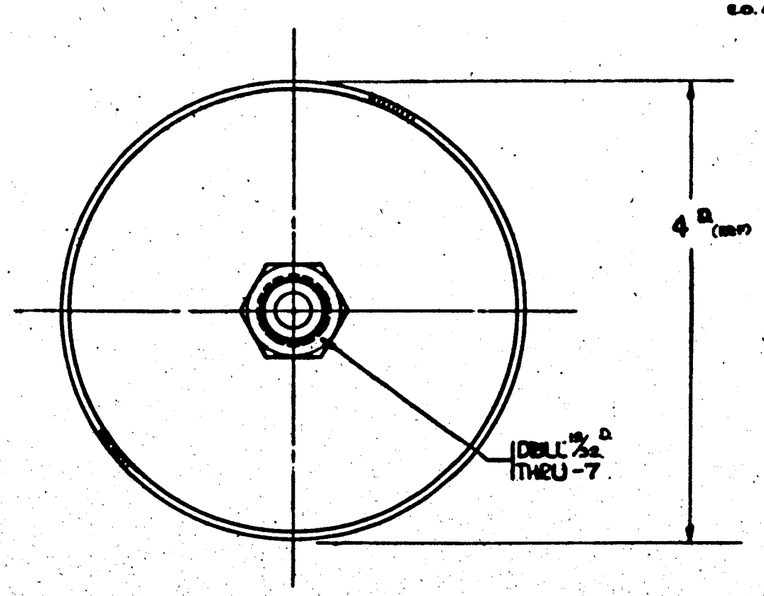

SECTION A-A

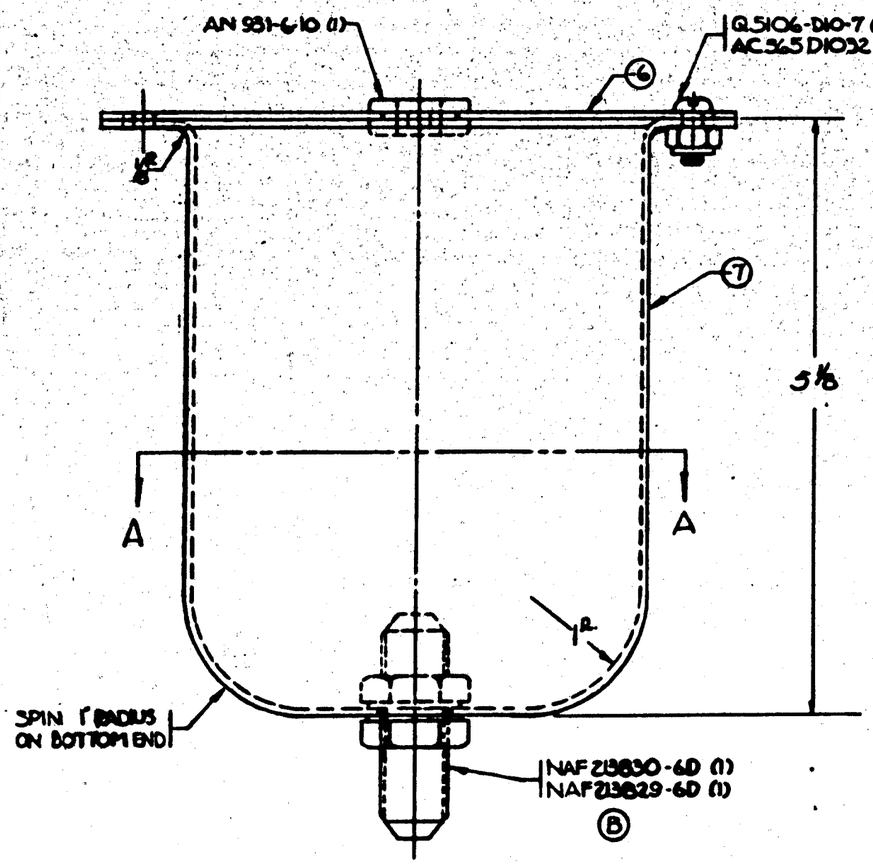

FINISH CODE	
Z	ANODIC TREATMENT
P	P-27 PRIMER
AP	ALUMINIZED PRIMER
C	CADMIUM PLATE

| | | |

LET	ALTERATION	DATE	BY
A	ADDED -7 BRACKETS FOR 28F7031 NEXT ASSY. NO W.T. CHG.		

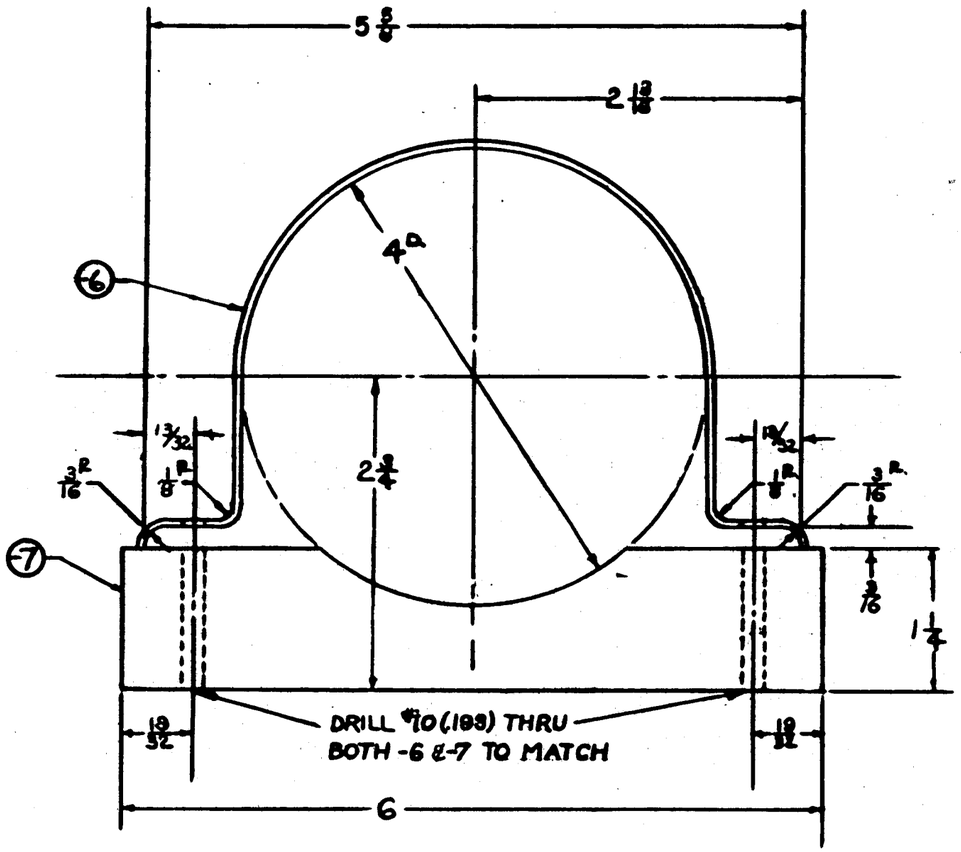

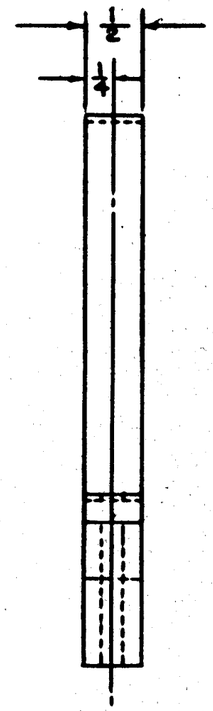

FINISH CODE	
Z	ANODIC TREATMENT
P	P-27 PRIMER
AP	ALUMINIZED-PRIMER
C	CADMIUM PLATE

NOTE:- WIRE TOGETHER & STOCK IN SETS.

C. NO a(s) 464

CONT. 88476
CONT. 91876 & FUTURE

ASSY. DASH NO.	MODEL	NEXT ASSY.	REQ.
-6-7	PBY-5A	28F6031	2
-6-7	2A-3AMN	28F6669	2
-6-7	PBY-5A	28F6669	2
-6-7	PBY-5A	28F6693	2
-6-7	PBY-5	28F6669	2

REQUIREMENTS PER AIRPLANE

REPLACES	.045 GRLD. WT.
REPLACED BY	ASSY. WT.

UNLESS OTHERWISE SPECIFIED DIMENSIONS DESIGNATED ± 1/64 — SCALE 12"=1'-0"

STAMP PART NUMBER WHERE SHOWN

PART NO.	STOCK	MATERIAL	SPEC.	LH REQ.	RH REQ.	LH REQ.	RH REQ.	LH REQ.	RH REQ.	LH REQ.	RH REQ.	LH REQ.	RH REQ.
				-0		-2		-3		-4		-5	
-7	1/8 x 1 1/8 x 6	HI CARTA	[illegible]	1									
-6	.064 x 1/8 x 10 1/4	ALCLAD	47A8 CONDT	1									

PARTS LIST PER ASSY.

A.C.		SCHWARZ	[illegible]	GERBER		KLEIN	LIVERA
NAVY NONE	ZP2AP -6 ONLY	2/4/42	5/3/42		R.E.R	5/20/42	[illegible]
HEAT TREAT	FINISH	DRAFT	CHECK	STRUCT	MAT	APPROV	ENG.

NAME CLAMP ~ OVERFLOW RESERVOIR ~ HYDRAULIC SYSTEM

CONSOLIDATED AIRCRAFT CORP. San Diego, Calif.

OPP. HAND

DWG. D — 28F6690

THIS DWG RUSH REL'D

R 5-27-42

LET	ALTERATION	DATE	BY

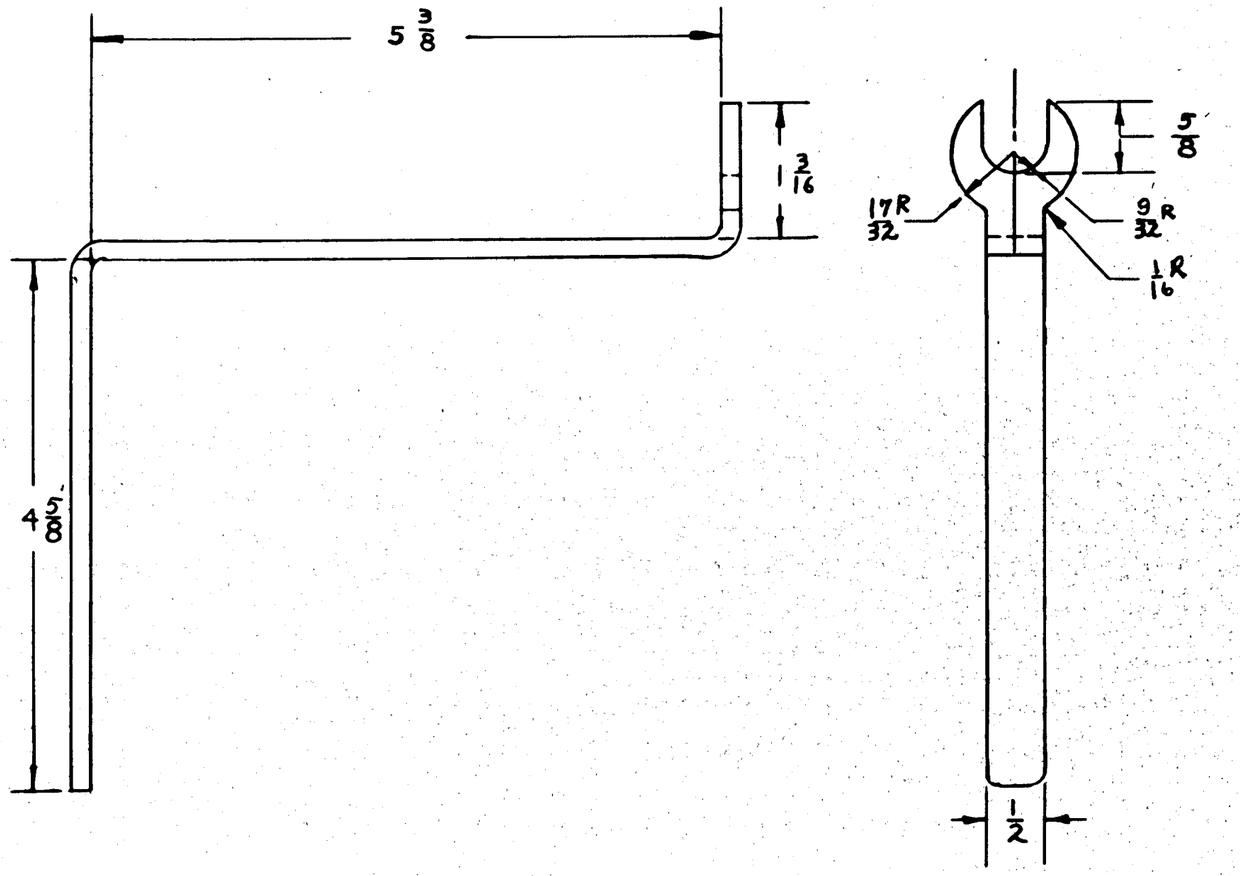

ALL BEND RADII 1/8

FINISH - CAD PLATE

ASSY. DASH No.	MODEL	NEXT ASSY.	REQ'D.
	28-5AMC	28U1025	1
	28-5AMN	28U1025	1
	PBY-5A	28U1025	1

REQUIREMENTS PER AIRPLANE

REPLACES

REPLACED BY

.213 CALC. WT.

ACT. WT.

UNLESS OTHERWISE SPECIFIED ± 1/32

SCALE 12" = 1'-0"

STAMP PART NUMBER WHERE SHOWN

PART No.	STOCK	MATERIAL	SPEC.	LH REQ.	RH REQ.	LH REQ.	RH REQ.	LH REQ.	RH REQ.	LH REQ.	RH REQ.	LH REQ.
	.156 x 1 1/16 x 11 1/2	CR. MO. LY. STEEL	AN QQ-S685									
PARTS LIST PER ASSY.				-0		-2		-3		-4		-5

AC		5-1-42							
NAVY 90-125,000 lb/in²	C	ED. DOUTY	5A 12						
HEAT TREAT	FINISH	DRAFT	CHECK	STRUCT	MAT	APPROV	ENG

NAME WRENCH - HYDRAULICS - NOSEWHEEL DOWNLOCK - SHORT.

OPP. HAND

CONSOLIDATED AIRCRAFT CORP. SAN DIEGO, CALIF.

DWG. SIZE D

28F6704

R

LET	ALTERATION	DATE	BY

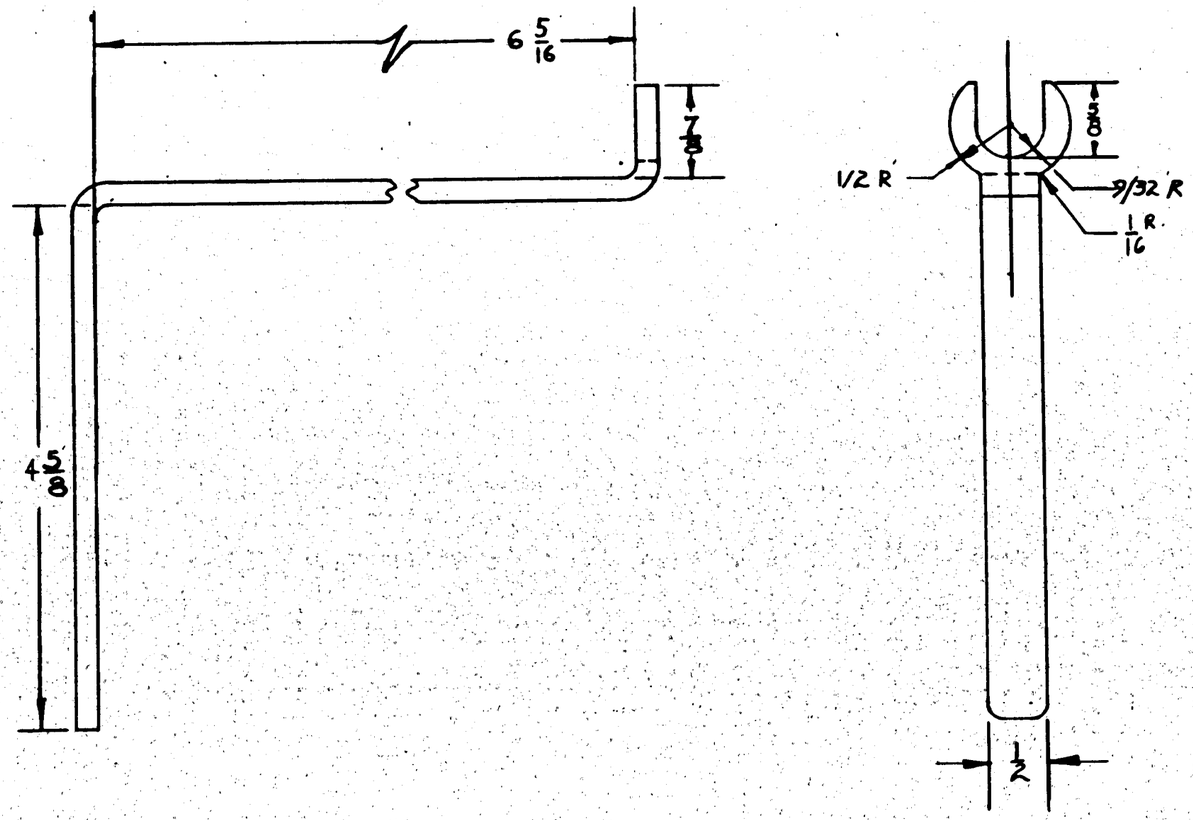

ALL BEND RADII 1/8

FINISH - CAD PLATE

ASSY. DASH NO.	MODEL	NEXT ASSY.	REQ.
	28-5AMC	28U1025	1
	28-5AMN	28U1026	1
	PBY-5A	28U1025	1

REQUIREMENTS PER AIRPLANE

REPLACES	CALC. WT. .21
REPLACED BY	ACT. WT.
ALL DIMENSIONS UNLESS OTHERWISE SPECIFIED ± 1/32	SCALE 12" = 1'-0"

STAMP PART NUMBER WHERE SHOWN

PART NO	STOCK	MATERIAL	SPEC.	LH REQ.	RH REQ.	LH REQ.	RH REQ.	LH REQ.	RH REQ.	LH REQ.	RH REQ.	LH REQ.
	@ .156 X 1 1/2 X 12	CR MOLY STEEL	AN QQ-S-685	-0		-2		-3		-4		-5

PARTS LIST PER ASSY.

AC		5-1-92							
NAVY 90-125,000 PSI	C	ED							
HEAT TREAT	FINISH	DRAFT	CHECK	STRUCT	MAT	APPROV	ENG.		

NAME WRENCH - HYDRAULICS - NOSE WHEEL DOWN LOCK - LONG.

CONSOLIDATED AIRCRAFT CORP. SAN DIEGO, CALIF.

OPP. HAND

DWG. SIZE D

28F6705

R

LET	ALTERATION	DATE	BY
	EDC 44902		
A	-6L & -6R (1 EA REQ'D) WAS -6 (2 REQ'D)		
	NO WT. CHG.	8-28-42	[illegible]
B	EQ. AB9444 DIM. 5 3/16 WAS 5 5/16, NO WT. CHG.	8-28-42	[illegible]
C	EQ. AB9460 PER AIR 150-2 CREATED -2 ASS'Y. REVISED REQ. PER AIRPLANE BLOCK. WT. [illegible]	8-28-42	[illegible]
D	EQ. B4280 16 1/16 DIM. WAS 12 5/8 (WT. CHG. NIL)	4-2-43	[illegible]

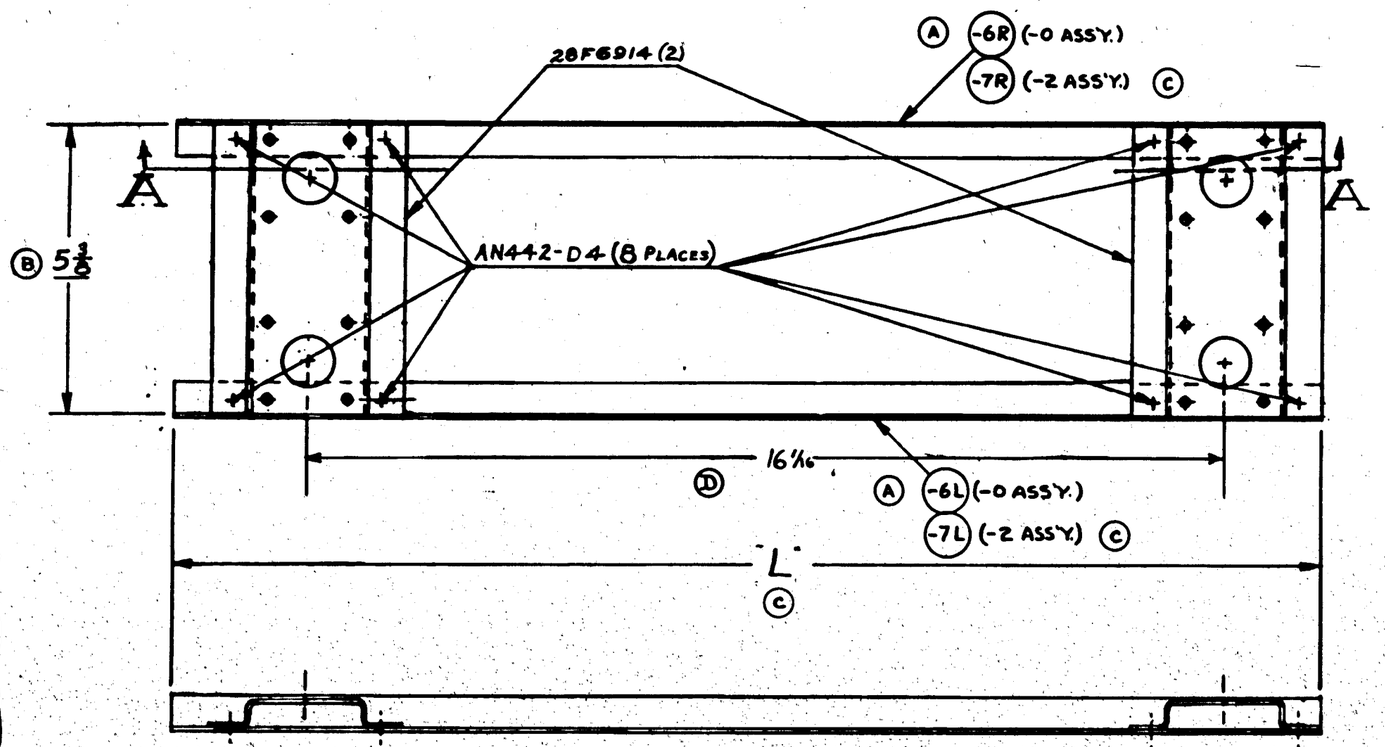

SECTION "A-A"

(C)

DASH NO.	"L" LENGTH
-6 L/R	19 7/0
-7 L/R	23 3/4

MC 150-2 C. 13595
C.91876 #904 ON

ASSY. DASH No.	MODEL	NEXT ASSY.	QUAN.
-2	PBY-5A	28F6712	1
-0	PBY-5	28F6712	1

REQUIREMENTS PER AIRPLANE

REPLACES — Net Wt. 334 Calc. Wt. 331

REPLACED BY — Act. Wt.

Limit on Dimensions Unless Otherwise Specified ± 1/32

SCALE 6"=1'-0"

STAMP PART NUMBER WHERE SHOWN

PART No.	STOCK	MATERIAL	SPEC.	LH REQ. -0	RH REQ. -0	LH REQ. -2	RH REQ. -2	LH REQ. -3	RH REQ. -3	LH REQ. -4	RH REQ. -4	LH REQ. -5	RH REQ. -5
28F6914						2	2						
-7R	Y2-A17T x 23 3/4		—			1	1						
-7L	Y2-A17T x 23 3/4												
-6R	Y2-A17T x 20			1	1								
-6L	Y2-A17T x 20												

PARTS LIST PER ASSY.

A C			Friedman	Wilson	Kelly		Price	
NAVY	Z-P-GP	9/21/42	2-3-43			9-14-42	9-14-42	
HEAT TREAT	FINISH	DRAFT	CHECK	STRUCT	MAT	APPROV	ENG.	

NAME BASE-FURN-RADAR OPERATOR-DUPLEXING UNIT

CONSOLIDATED AIRCRAFT CORP. WF SAN DIEGO, CALIF.

OPP. HAND

SIZE D

28F6711-

R

LET	ALTERATION	APP'D	DATE
B	REVISED & REDRAWN RECORD CHG ONLY		

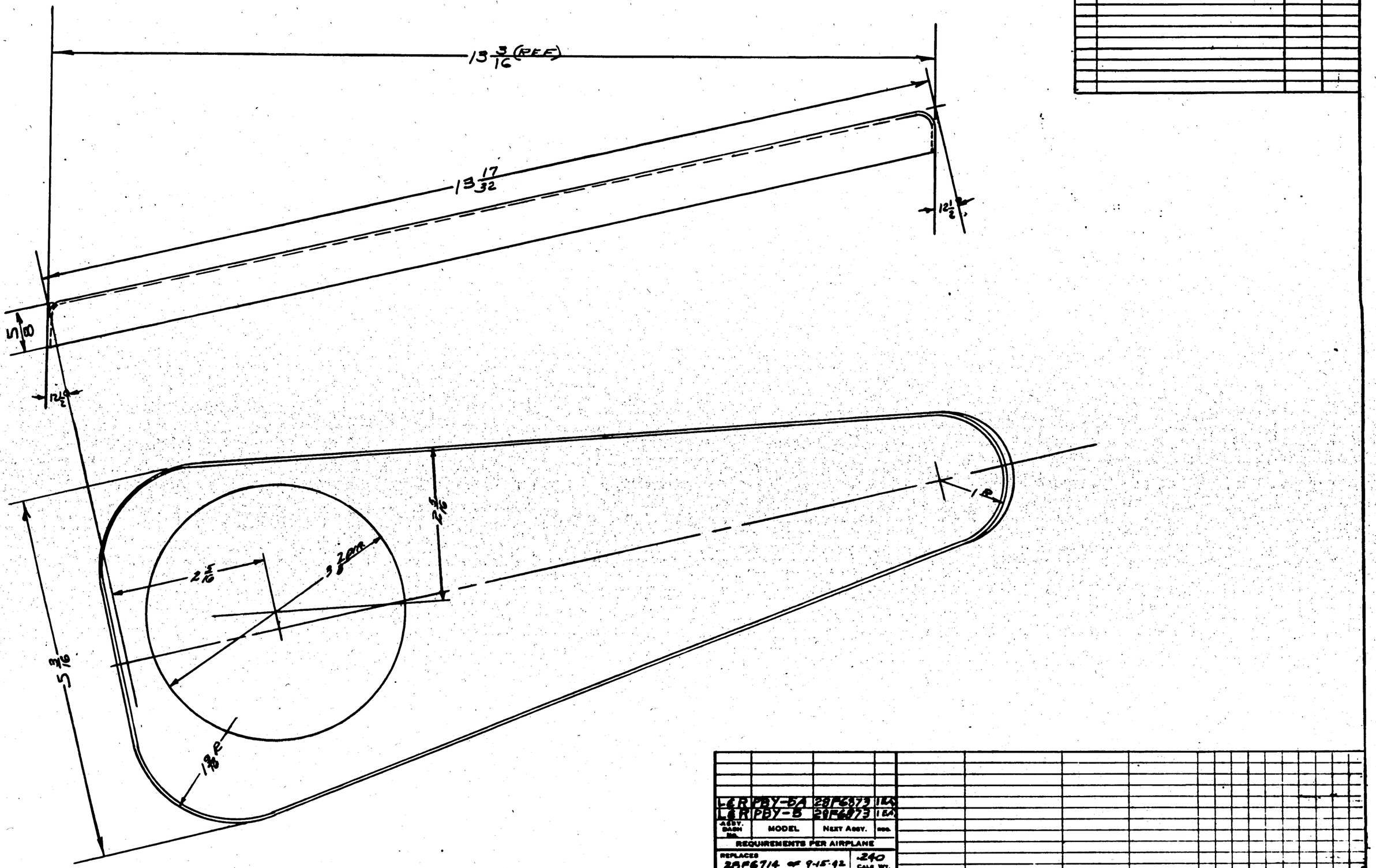

ALL BEND RADII 1/4

APPROVED FOR TOOLING BY
E. E. Dalton
1-27-43

L&R PBY-6A	28F6713	1 EA
L&R PBY-5	28F6773	1 EA

ASSY. BASH No.	MODEL	NEXT ASSY.	REQ.

REQUIREMENTS PER AIRPLANE

REPLACES 28F6714 of 9-15-42 | -240 CALC WT.

REPLACED BY | ACT. WT.

UNLESS OTHERWISE SPECIFIED ±1/32 ±1/8 | SCALE 12"=1'-0"

STAMP PART NUMBER WHERE SHOWN

PART No.	STOCK	MATERIAL	SPEC.	LH REQ.	RH REQ.	LH REQ.	RH REQ.	LH REQ.	RH REQ.	LH REQ.	RH REQ.
PARTS LIST PER ASSY.				-0		-2		-3	-4	-5	
-8	.032x7X16	ALCLAD	4748-T							QD	

A.C.		DRWG. BY						
NAVY	Z-P-GP	11-19-42		W				
HEAT TREAT	FINISH	DRAFT	CHECK	STRUCT	MAT	APPROV	DATE	

NAME BULKH'D.-HEAT ANTI-ICING-PLENUM CHAMBER

OPP. HAND 28F671

CONSOLIDATED AIRCRAFT CORP. SAN DIEGO, CALIF.

DWG. SIZE D

28F6714

B

LET	ALTERATION	DATE	BY

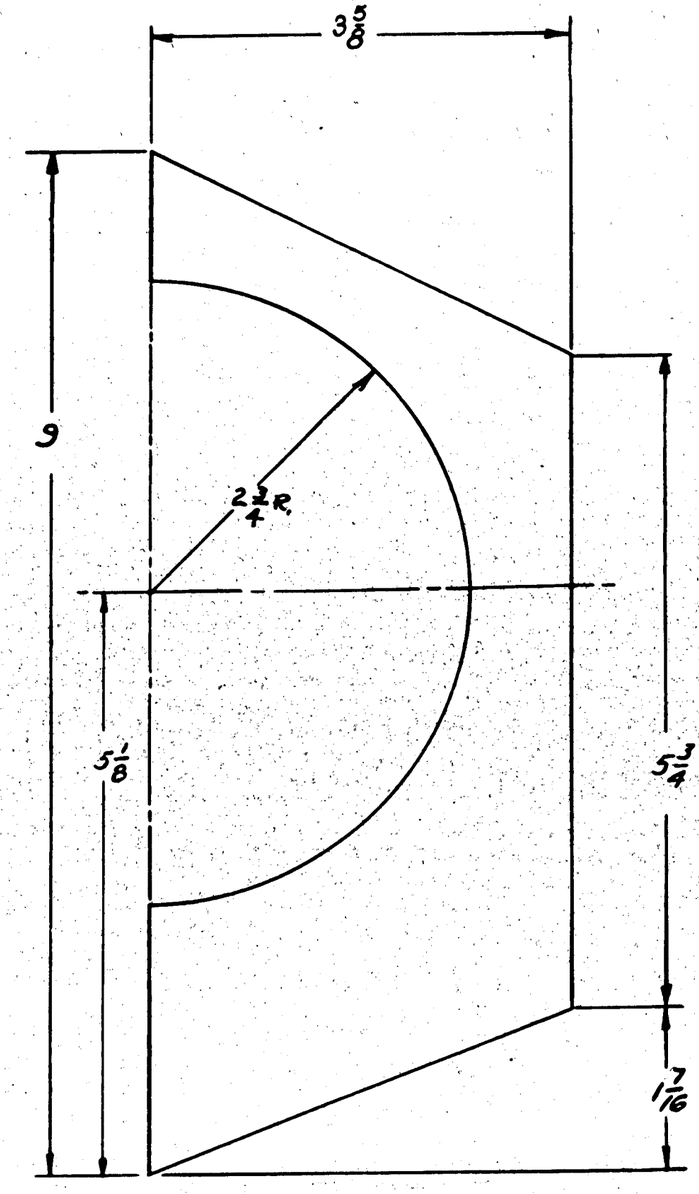

C.A.C. CHG. #23-14

ASSY. DASH NO.	MODEL	NEXT ASSY.	REQ.
	PBY-5A	28W5186	2
	PBY-5	28W5186	2

REQUIREMENTS PER AIRPLANE

REPLACES | .03 GALS. WT.

REPLACED BY | ASY. WT.

UNLESS OTHERWISE SPECIFIED +1/32 | SCALE 12"=1-0"

STAMP PART NUMBER WHERE SHOWN

PART No.	STOCK	MATERIAL	SPEC..	LH REQ.	RH REQ.	LH REQ.	RH REQ.	LH REQ.	RH REQ.	LH REQ.	RH REQ.	LH REQ.	RH REQ.
	.032 X 4½ X 10	ALCLAD	47AB-T										
PARTS LIST PER ASSY.				-0		-2		-3		-4		-5	

AC		9-11-42				
NAVY None	Z-P-GP					
HEAT TREAT	FINISH	DRAFT	CHECK	STRUCT	MAT	APPROV	ENG.

NAME BRACKET-FURNS.-HEAT ANTI-ICING SYS.-WING-STA-16

OPP. HAND

CONSOLIDATED AIRCRAFT CORP. WHF SAN DIEGO, CALIF.

DWG. SIZE D

28F6734

R

LET	ALTERATION	DATE	BY

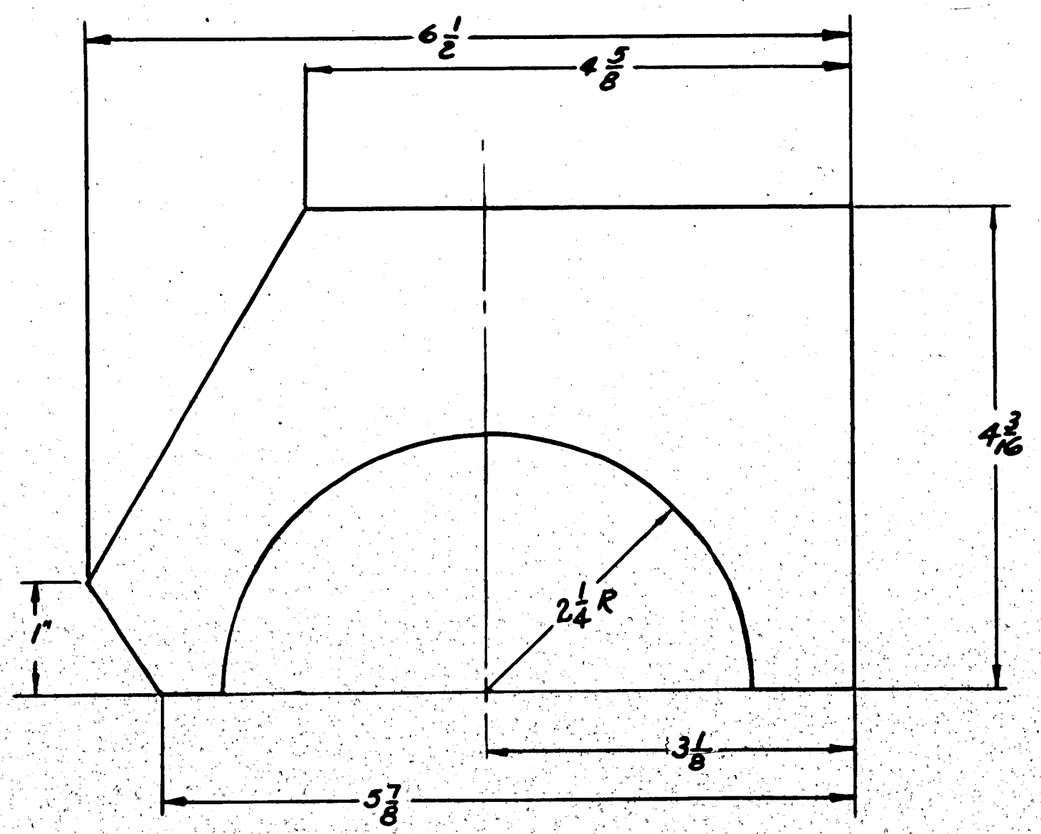

C.A.C. CHG. No. 23-14

ASSY. DASH No.	MODEL	NEXT ASSY.	REQ.
	PBY-5A	28W5182C	2
	PBY-5	28W5182C	2

REQUIREMENTS PER AIRPLANE

REPLACES — .019 CALC. WT.

REPLACED BY — ACT. WT.

UNLESS OTHERWISE SPECIFIED ± 1/32 — SCALE 12" = 1'—0

STAMP PART NUMBER WHERE SHOWN

PART No.	STOCK	MATERIAL	SPEC.	LH REQ.	RH REQ.	LH REQ.	RH REQ.	LH REQ.	RH REQ.	LH REQ.	RH REQ.	LH REQ.	RH REQ.
	PARTS LIST PER ASSY.			-0		-2		-3		-4		-5	
	032X 6 1/2 X 6 3/4	ALCLAD	4 HR-T										

AC

NAVY NONE — HEAT TREAT

Z-P-GP — FINISH

DRAFT	CHECK	STRUCT	MAT	APPROV	ENG
9-10-41		9-25-41		9-28-41	

NAME BRACKET - FURNS. HEAT ANTI-ICING SYS. WING STA. 18

OPP. HAND

CONSOLIDATED AIRCRAFT CORP. SAN DIEGO, CALIF.

DWG. SIZE D

28F6738

R

LET	ALTERATION	DATE	BY
A	1/8 R. WAS 1/16 R. WT. CHG. NEG.	1-20-43	[illegible]
B	RAM'S CUTOUT FROM LOWER CORNER OF -7L ADDED CUTOUT TO UPPER CORNER OF -7L. NO WT. CHG.	5-18-43	JACOBS

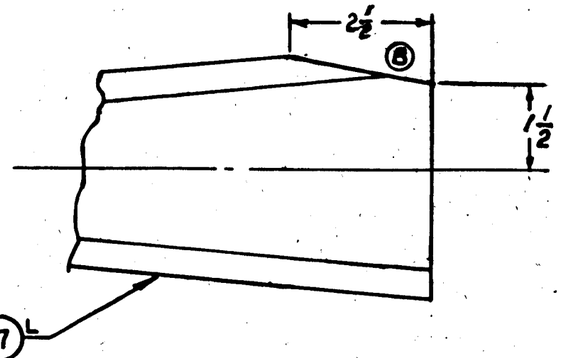

SAME AS -6 EXCEPT AS SHOWN

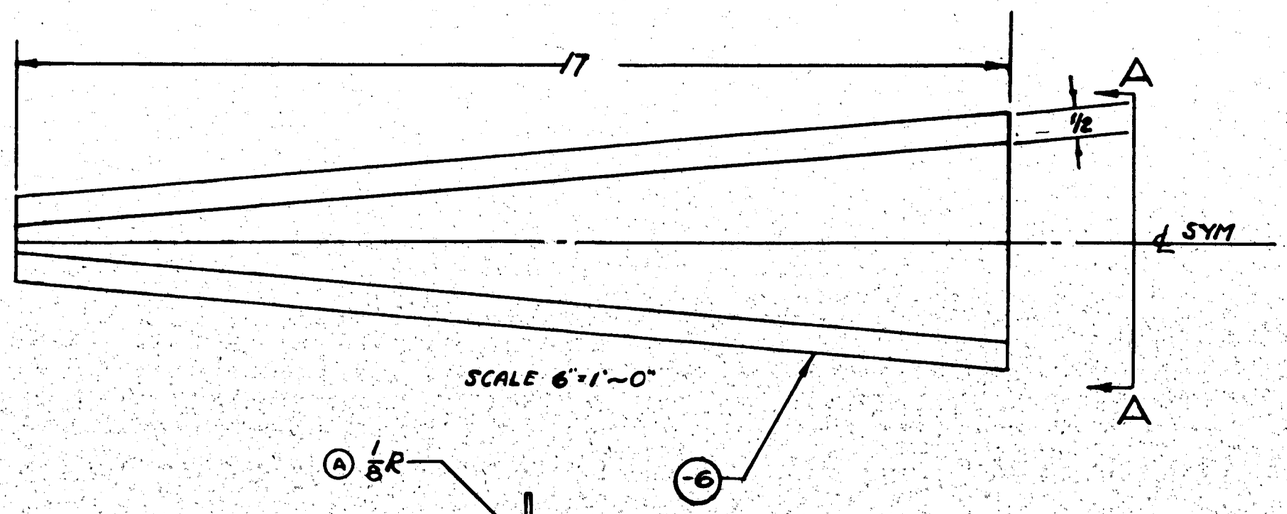

SCALE 6"=1'-0"

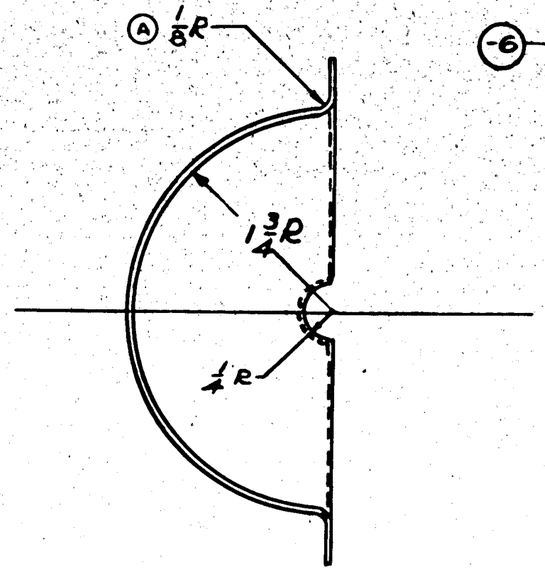

VIEW -A-A-

SCALE 12"=1'-0"

MCR	ASSY. DASH NO.	MODEL	NEXT ASSY.	REQ.
178-(2)	-7R	PBY-5A	28F6749	1
	-7L	PBY-5A	28F6749	1
	-6	PBY-5A	28F6733	A
28-(4)	-7R	PBY-5	28F6749	1
	-7L	PBY-5	28F6749	1
	-6	PBY-5	28F6733	B

REQUIREMENTS PER AIRPLANE

REPLACES

REPLACED BY

.14 CALC. WT.

AGY. WT.

SCALE AS NOTED

STAMP PART NUMBER WHERE SHOWN

PART NO.	STOCK	MATERIAL	SPEC.	LH REQ. -0	RH REQ. -0	LH REQ. -2	RH REQ. -2	LH REQ. -3	RH REQ. -3	LH REQ. -4	RH REQ. -4	LH REQ. -5	RH REQ. -5
-7R	.020X7X18	ALCLAD	47A8-T	1									
-7L	.020X7X18	ALCLAD	47A8-T		1								
-6	.020X7X18	ALCLAD	47A8-T			1							

PARTS LIST PER ASSY.

FINISH

Z-1 COAT ZINC CHROMATE PRIMER SPEC. P.27-C.
1 COAT HEAT RESISTING ALUMINUM VARNISH

APPROVED FOR TOOLING BY P.B. Humphreys 1/16

AC								
NAVY NONE	NOTED		Stress			Power	Supt.	
HEAT TREAT	FINISH	DRAFT	CHECK	STRUCT	MAT	APPROV	ENG.	

NAME OUTLET-FURNS-HEAT-ANTI-ICING DUCT.

OPP. HAND

CONSOLIDATED AIRCRAFT CORP. SAN DIEGO, CALIF.

DWG. SIZE D

28F6739

E.O. A74755 (23-8)
E.O. B 2694

LET	ALTERATION	DATE	BY
A	LENGTH DIM. 15/32 WAS 7/16		
	NO WT. CHG.	12-30-42	W. Ashley
B	ADDED -6 PART (WT. CHG.		
	FOR -0 IS NONE, FOR -6		
	WT. = .09) ADDED 1/32 DIM.	3-2-43	ELLIS
C	3/32 R WAS 1/16 R. NO WT.		
	CHG.	5-18-43	MACKEY
D	3/16 x 15/32 SLOT WAS 3/32 R		
	7/16 SLOT. NO WT. CHG.	5-27-43	Jean Tate

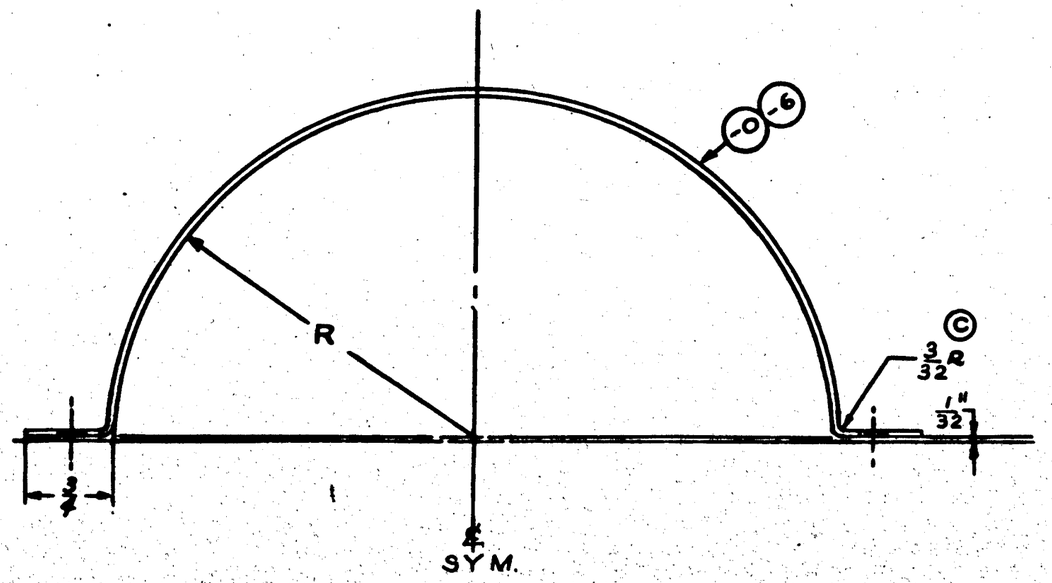

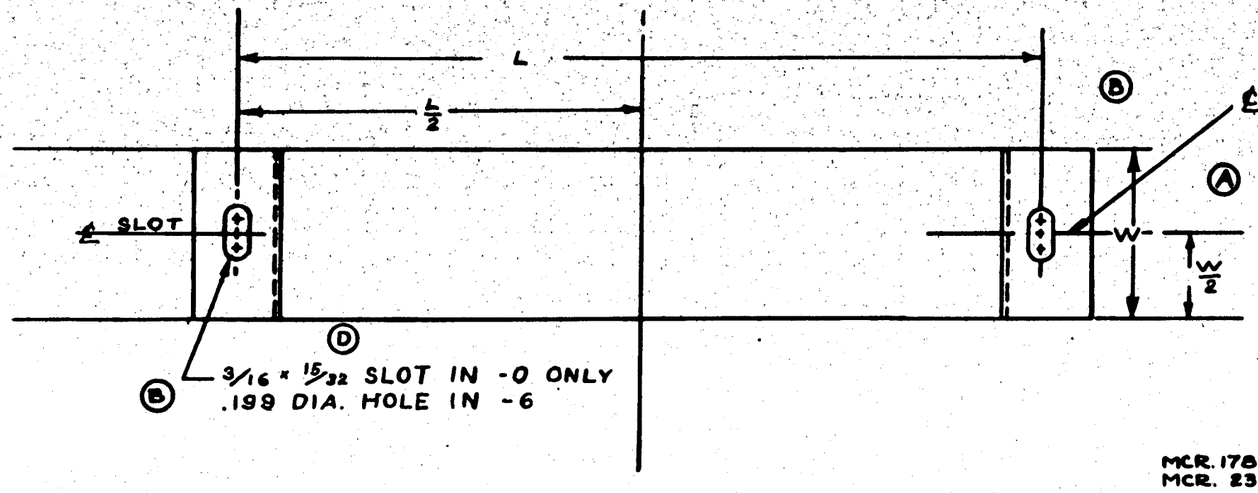

PART NO.	L	W	R
-0	6 3/4	1 1/8	3.03 +0-1/64
-6	5 7/8	1	2 9/16

(B)

MCR. 178(6) MCR. 23(B)

-6	PBY-5A	28F6731	4	
-6	PBY-5	28F6731	4	
	PBY-5A	28F6736	26	
	PBY-5A	28F6780	2	
	PBY-5	28F6736	26	
	PBY-5	28F6780	2	

ASSY. DASH NO. | MODEL | NEXT ASSY. | REQ'D

REQUIREMENTS PER AIRPLANE

REPLACES -0 =.034 -6=.09 | Quan. Per.

REPLACED BY | Asy. Per.

UNLESS OTHERWISE SPECIFIED ± 1/32 & NOTED | SCALE 12" = 1'0"

STANDARD PARTS NUMBERS WHERE SHOWN

PART No	STOCK	MATERIAL	SPEC.	LH REQ.	RH REQ.	LH REQ.	RH REQ.	LH REQ.	RH REQ.	LH REQ.	RH REQ.	LH REQ.	RH REQ.
				PARTS LIST PER ASSY.		-0		-3		-4		-5	
-6	.040 x 1 1/8 x 9 1/4	ALCLAD	47A8-T										
	.040 x 1 5/8 x 11 1/2	ALCLAD	47A8-T										

AC		PAPPAS	Strand				
NAVY NONE	NONE	9-10-42	9-26-42		McGILL	9-26-42	
HEAT TREAT	FINISH	DRAFT	CHECK	STRUCT	MAT	APPROV	ENG

NAME COUPLING - FURNS HEAT ANTI-ICING DUCT

OPP. HAND

CONSOLIDATED AIRCRAFT CORP. WF SAN DIEGO, CALIF.

SIZE D | 28F6740

R 28F6740

LET	ALTERATION	DATE	BY
A	-8 WAS -7 & ADDED DIM. 5/16, REMOVED NOTE, "SAME ---ADDED WT. CHG. NEG.	5-20-43	

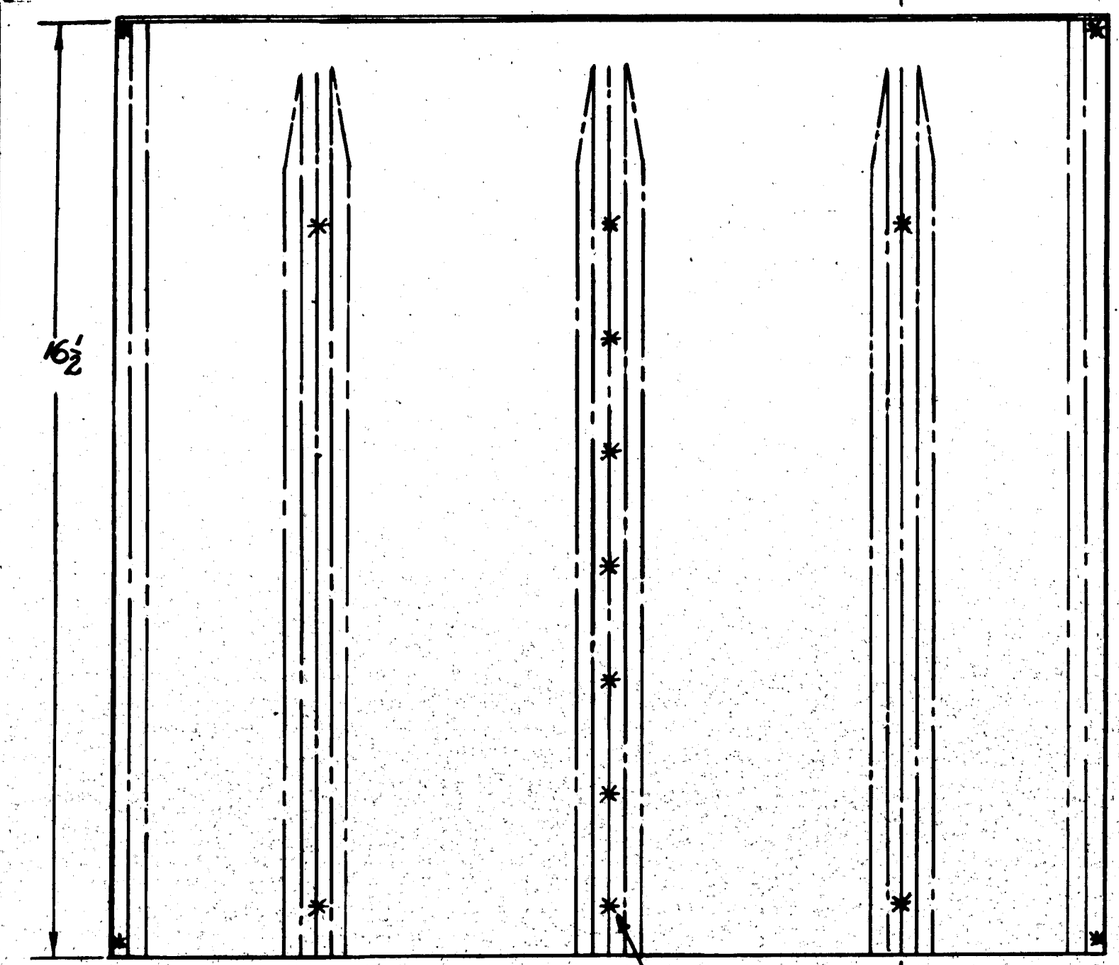

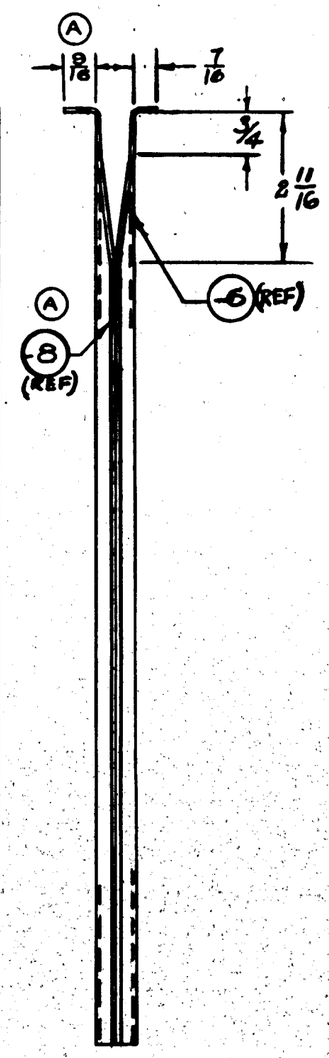

SECTION "AA"
SCALE 6"=1'-0"

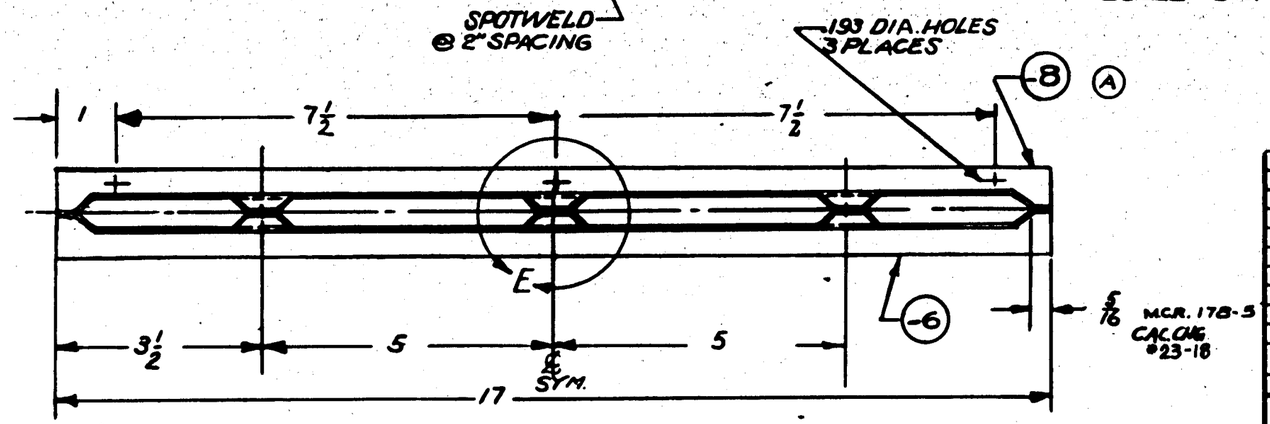

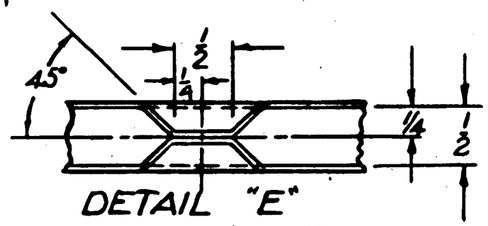

DETAIL "E"
SCALE 12"=1'-0"

NOTE:—
FINISH Z AFTER SPOTWELDING
1 COAT ZINC CHROMATE PRIMER P-27, & 1 COAT HEAT RESISTING ALUMINUM VARNISH.

APPROVED FOR TOOLING BY R.B. Humphreys 9/8

ASSY. DASH NO.	MODEL	NEXT ASSY.	QUAN.
	P8Y-5A	28F6733	10
	P8Y-5	28F6733	10

REQUIREMENTS PER AIRPLANE

REPLACES	1.20 LBS. CALC. WT.
REPLACED BY	ACT. WT.
UNLESS OTHERWISE SPECIFIED ± .02	SCALE 6"=1'-0" NOTED

STAMP PART NUMBER WHERE SHOWN

PART No.	STOCK	MATERIAL	SPEC.	LH REQ. -0	RH REQ. -0	LH REQ. -2	RH REQ. -2	LH REQ. -3	RH REQ. -3	LH REQ. -4	RH REQ. -4	LH REQ. -5	RH REQ. -5
-8	.020 x 18 x 18¾	ALCLAD	99-A-362 II	1									
-6	.020 x 18 x 18½	ALCLAD	99-A-362 II	1									

PARTS LIST PER ASSY.

AC		10-1-42	Stressed
NAVY NONE	NOTED		
HEAT TREAT	FINISH	DRAFT	CHECK / STRUCT / MAT / APPROV / ENG.

NAME DUCT EXTENSION—FURNS. HEAT ANTI-ICING DUCT

OPP. HAND

CONSOLIDATED AIRCRAFT CORP. WF SAN DIEGO, CALIF.

SIZE D — 28F6741

R 10-19-42

LET	ALTERATION	DATE	BY

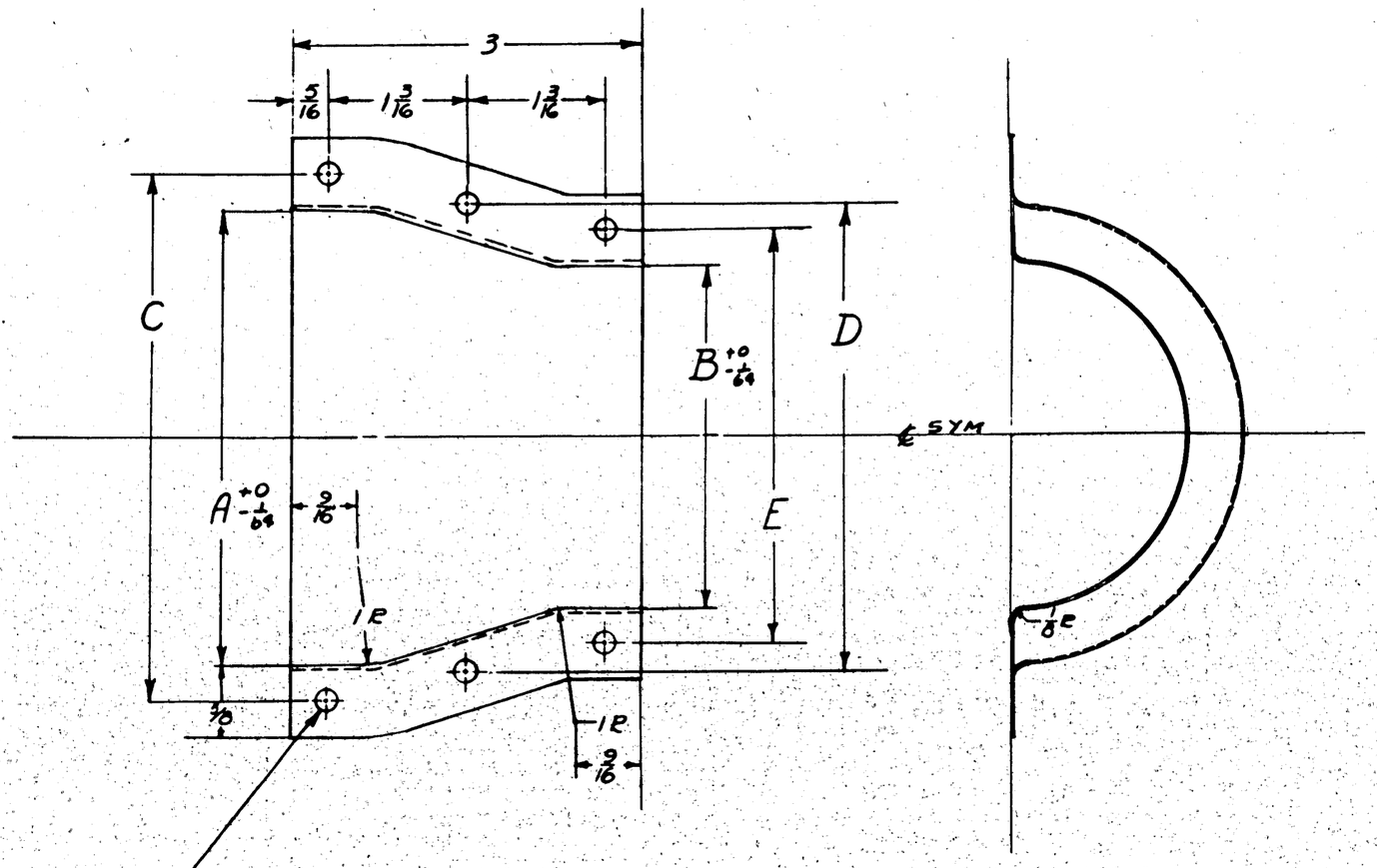

DASH No.	A	B	C	D	E	CALC. WT.
-6	4.03	3.03	4 5/8	4 1/8	3 5/8	.041*
-7	5.03	4.03	5 5/8	5 1/8	4 5/8	.05*
-8	6.03	5.03	6 5/8	6 1/8	5 5/8	.059*

C.A.C. CHG. #23

ASSY. DASH No.	MODEL	NEXT ASSY.	REQ'D.
-8	PBY-5A	28F6736	4
-7	PBY-5A	28F6736	4
-6	PBY-5A	28F6736	4
-8	PBY-5	28F6736	4
-7	PBY-5	28F6736	4
-6	PBY-5	28F6736	4

REQUIREMENTS PER AIRPLANE

REPLACES — NOTED CALC. WT.

REPLACED BY — ACT. WT.

UNLESS OTHERWISE SPECIFIED ± 1/32 UNLESS NOTED — SCALE 12" = 1'0"

STAMP PART NUMBER WHERE SHOWN

PART No.	STOCK	MATERIAL	SPEC.	LH REQ.	RH REQ.	LH REQ.	RH REQ.	LH REQ.	RH REQ.	LH REQ.	RH REQ.	LH REQ.	RH REQ.
-8	.020 x 5 x 12	ALCLAD	47A8-T										
-7	.020 x 5 x 12	ALCLAD	47A8-T										
-6	.020 x 5 x 11	ALCLAD	47A8-T	-0		-3		-4		-5			

PARTS LIST PER ASSY.

AC		PRINTS	Strand		Brown	
NAVY NONE	NONE	9-2-42	9-26-42		9-29-42	
HEAT TREAT	FINISH	DRAFT	CHECK	STRUCT	MAT	APPROV	ENG.

NAME REDUCER COUPLING FURNS HEAT ANTI-ICING DUCT

CONSOLIDATED AIRCRAFT CORP. SAN DIEGO, CALIF.

OPP. HAND

SYM. D SIZE 28F6742

LET	ALTERATION	DATE	BY

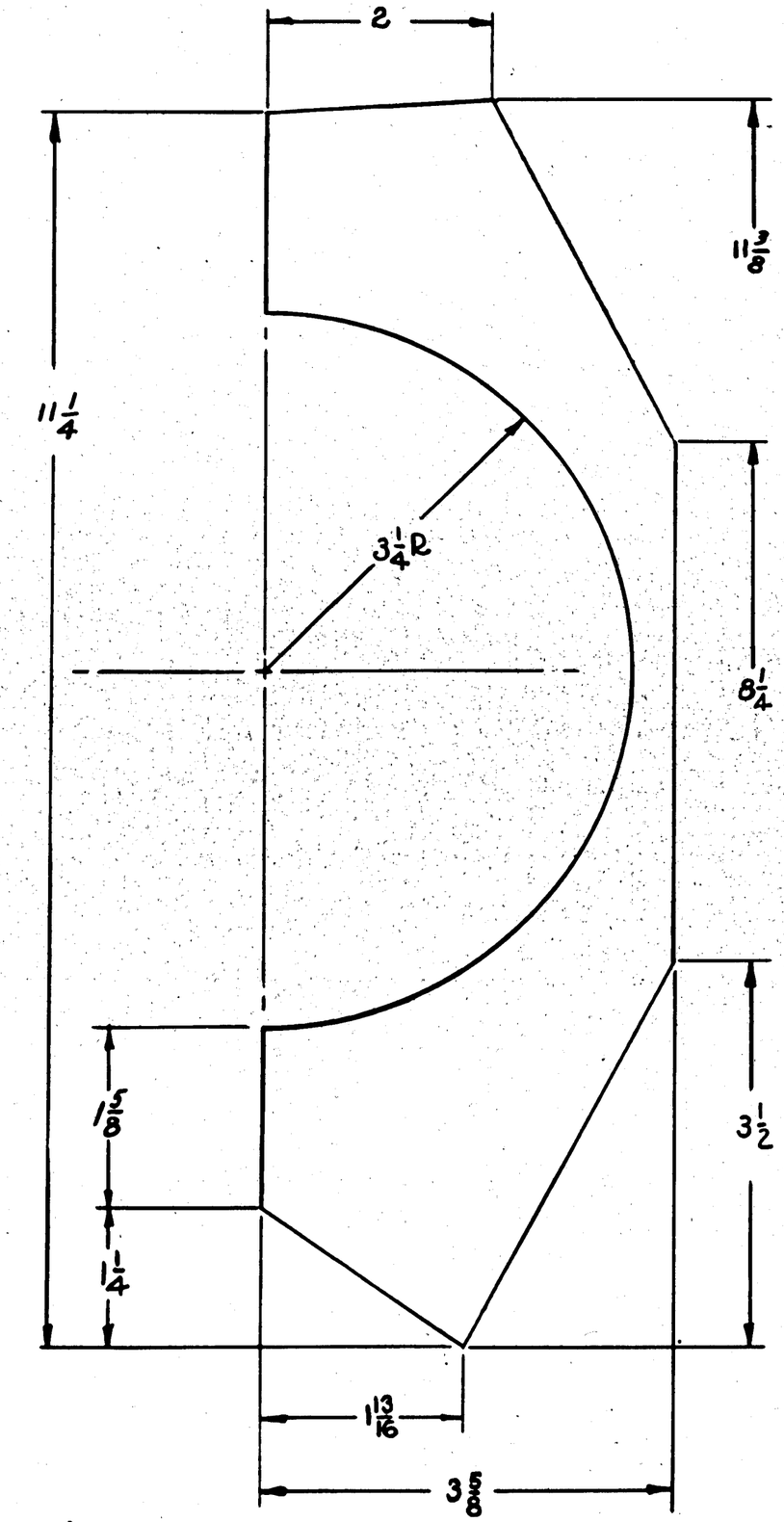

C.A.C. CHG #23-14

ASSY. DASH No.	MODEL	NEXT ASSY.	REQ.
	PBY-5A	28W5186	2
	PBY-6	28W5186	2

REQUIREMENTS PER AIRPLANE

REPLACES — CALC. WT. .011 lbs

REPLACED BY — ADV. WT.

UNLESS OTHERWISE SPECIFIED ± 1/32 — SCALE 12" = 1'—0

STAMP PART NUMBER WHERE SHOWN

PART No.	STOCK	MATERIAL	SPEC.
	.032 X 5 X 12½	ALCLAD	4748-T

PARTS LIST PER ASSY.

LH REQ.	RH REQ.	LH REQ.	RH REQ.	LH REQ.	RH REQ.	LH REQ.	RH REQ.	LH REQ.	RH REQ.
-0		-2		-3		-4		-5	

A C — NAVY NONE — *S HEAT TREAT — Z-P-GP — FINISH

DRAFT	CHECK	STRUCT	MAT	APPROV	ENG.
9-12-42		9-28-42		9-28-42	

NAME BRACKET-FURNS.-HEAT ANTI-ICING SYS. WING STA 15

CONSOLIDATED AIRCRAFT CORP. SAN DIEGO, CALIF.

OPP. HAND

DWG. SIZE D — 28F6748

R 10-12

LET	ALTERATION	DATE	BY

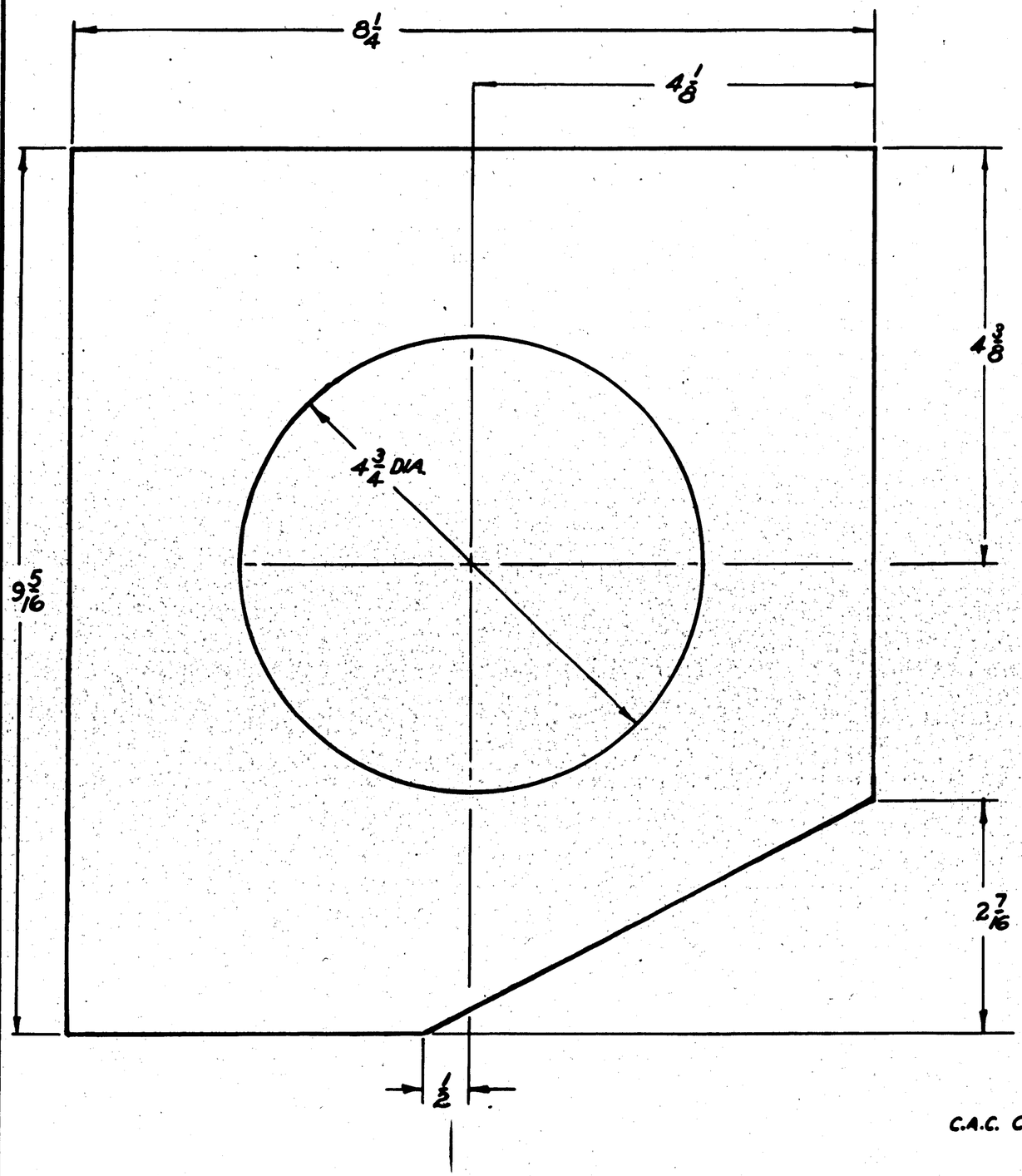

C.A.C. CHG #23-14

ASSY. DASH NO.	MODEL	NEXT ASSY.	REQ.
	PBY-5A	28W012	0
	PBY-5	28W012	0

REQUIREMENTS PER AIRPLANE

REPLACES — CALC. WT. .217

REPLACED BY — ACT. WT.

SCALE 12"=1'-0" — ±1/32

STAMP PART NUMBER WHERE SHOWN

PART NO.	STOCK	MATERIAL	SPEC.	LH REQ.	RH REQ.	LH REQ.	RH REQ.	LH REQ.	RH REQ.	LH REQ.	RH REQ.	LH REQ.	RH REQ.
	.040X9X10	ALCLAD	4788-T										
PARTS LIST PER ASSY.				-0		-2		-3		-4		-5	

AC

NAVY None — HEAT TREAT

Z-P-6P — FINISH

DRAFT	CHECK	STRUCT	MAT	APPROV	ENG.
9-16-42					

NAME REINFORCING-FURNS-ANTI-ICING SYSTEM-WING-FRONT SPAR

OPP. HAND

CONSOLIDATED AIRCRAFT CORP. SAN DIEGO, CALIF.

SIZE D

28F6752

R

LET	ALTERATION	DATE	BY
A	REVISED PER RAN 2/		
	RECORD CHG. ONLY	4-29-43	REED
B	ADDED -9 CLIP AN442D4		
	LOCATING DIM. WT. CHG. NEG.	5-6-43	BURKE

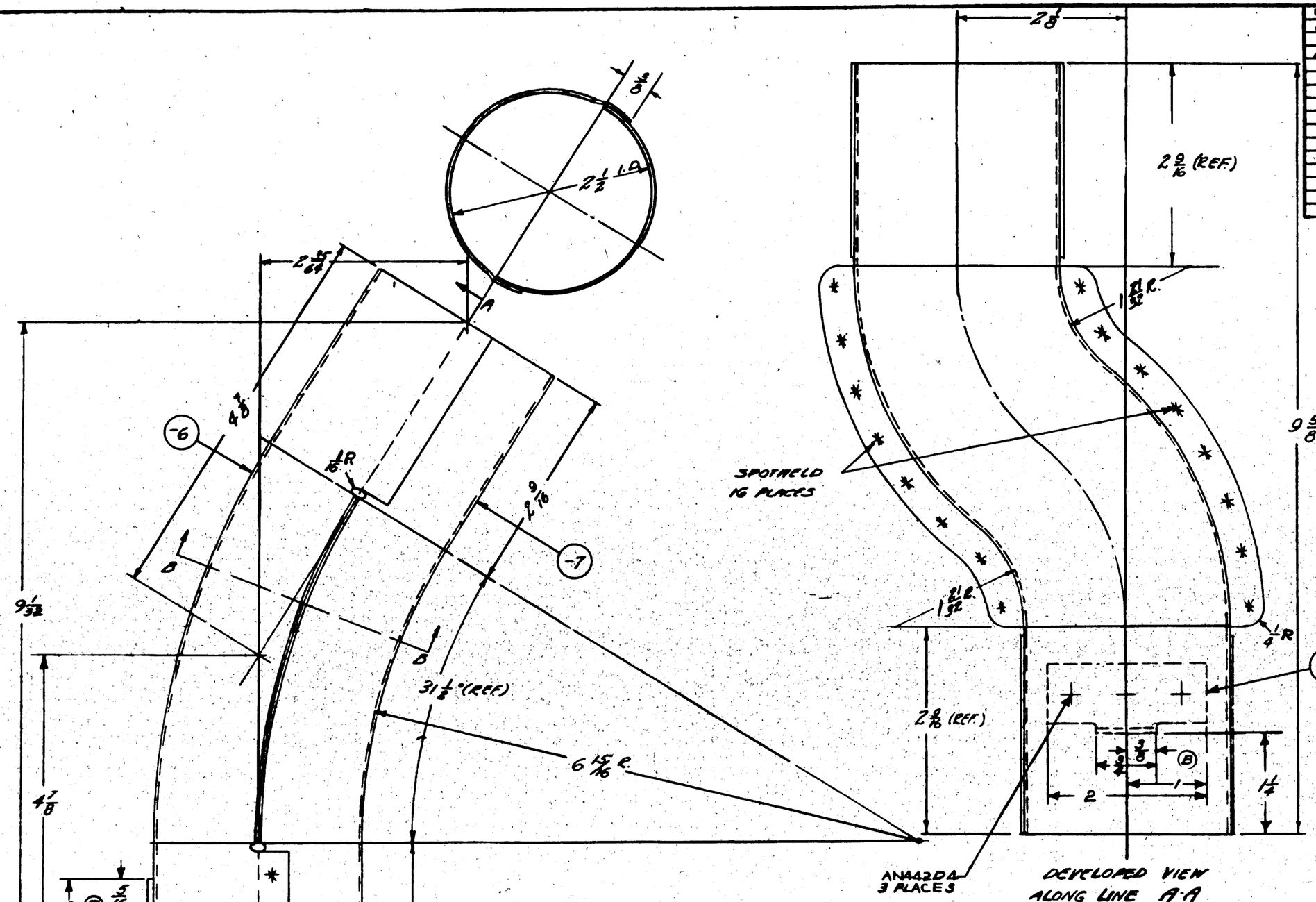

APPROVED FOR TOOLING BY V. Brown 1-27-43

ASSY. DASH NO.	MODEL	NEXT ASSY.	REQ.
	PBY-5A	28F6788	1
	PBY-5	28F6723	1

REQUIREMENTS PER AIRPLANE

REPLACES 28F6755 OF 9-17-42 — CALC. WT.

REPLACED BY — ACT. WT.

LIGHT OR SHOWERED UNLESS OTHERWISE SPECIFIED — SCALE 12" = 1'0"

STAMP PART NUMBER WHERE SHOWN

AN442D4

PART NO	STOCK	MATERIAL	SPEC.	LH REQ.	RH REQ.	LH REQ.	RH REQ.	LH REQ.	RH REQ.	LH REQ.	RH REQ.	LH REQ.	RH REQ.
-9	.064 x 2 1/2 x 2	AL. ALLOY	47ABT										
-7	.040 x 9 x 11	25 1/2 H	47A2-TEMP 1/2	1									
-6	.040 x 8 x 11	25 1/2 H.	47A2-TEMP 1/2	1									
	PARTS LIST PER ASSY.			-0		-2		-3		-4		-5	

A.C.		B.O.I	Reed	Dahlke		Gerald		
NAVY NONE	Z-P-6P	12-4-42	[illegible]	rl		Hall		
HEAT TREAT	FINISH	DRAFT	CHECK	STRUCT	MAT	APPROV	ENG.	

NAME ELBOW-UPPER FIN ANTI-ICING SYSTEM

OPP. HAND

CONSOLIDATED AIRCRAFT CORP. SAN DIEGO, CALIF.

SIZE D — 28F6755

R

28F6755

LET	ALTERATION	DATE	BY
	F.O.A.39601 M.C.R.23-10		
A			
	E.O.B.34413A		
B	REMOVED NOTE [illegible]		
	Q4305-D(4) ADDED AN526-		
	AD1083-A[illegible]		
	[illegible]		
	1082.(4) [illegible]		
	AN814-4DWG-8(2) AN3-6A(2) B		
	AN3-6A(2) (M.C.N.#196)	3-30-43	[illegible]

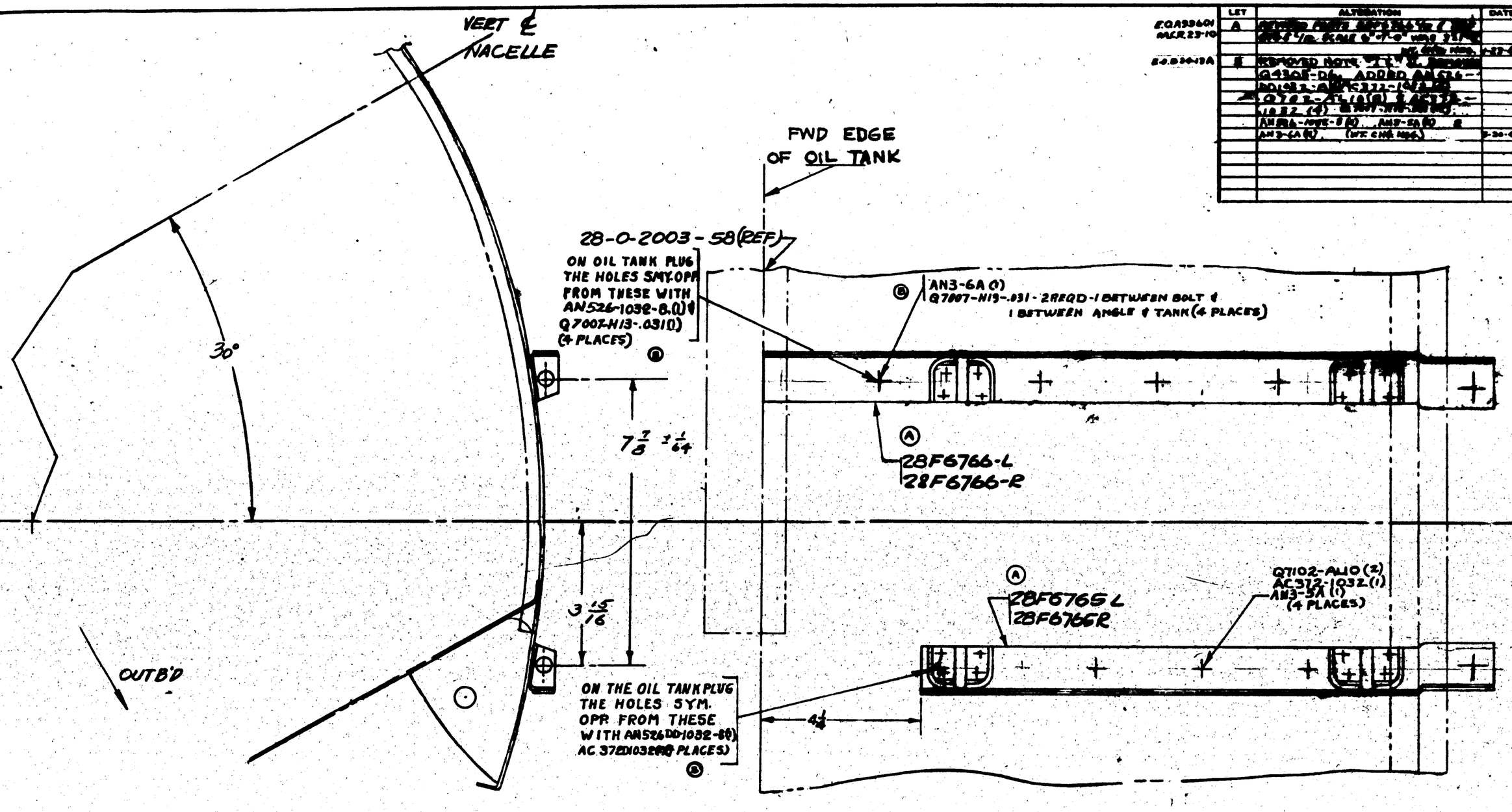

VIEW LOOKING AFT

M.C.R.	ASSY. DASH NO.	MODEL	NEXT ASSY.	REQ.
#178-(3)	-5	P&V-5A	28F6787	1
	-7	P&V-5A	28F6787	1
M.C.R. #23-10	-8	P&V-5	28F6787	1
	-6	P&V-5	28F6787	1

REQUIREMENTS PER AIRPLANE

REPLACES — CALC. WT.

REPLACED BY — ACT. WT.

SCALE 6"=1'-0"

STAMP PART NUMBER WHERE SHOWN

PART No.	STOCK	MATERIAL	SPEC.	LH REQ.	RH REQ.	LH REQ.	RH REQ.	LH REQ.	RH REQ.	LH REQ.	RH REQ.	LH REQ.	RH REQ.
PARTS LIST PER ASSY.				-0		-2		-3		-4		-5	
AN526-1032-8				4	4								
AN3-5A				4	4								
Q7007-H13-.031				12	12								
Q7102-AL10				8	8								
AN3-6A				4	4								
AN425-DC													
AC372D1032-8				4	4								
AN526D1032				4	4								
28F6765-L						1							
28F6766-L				1									
28F6766-R					1								
28F6765-R					1								
AC372-1032				4	4								

AC				
NAVY NONE			11-6	
HEAT TREAT	FINISH	DRAFT	CHECK	STRUCT. MECH. APPROV. ENG.

NAME INSTALLATION — SUPPORT ANGLES - HEAT EXCH.

OPP. HAND 28F6778-R

CONSOLIDATED AIRCRAFT CORP. SAN DIEGO, CALIF.

SIZE D — 28F6778

APPROVED FOR TOOLING BY E.O. Umphrey

R

LET.	ALTERATION	DATE	BY
A	-9, .035 x ½ O.D. x 13 WAS .062 x ½ OD		
	413, WT. CHG. NEG.	1-22-43	ACCAMP
B	CHANGED VIEW B & ADDED "THIS-		
	-- SHOWN" WT. CHG. NEG.	3-22-43	ACCAMP
C	1½ R WAS ¼ R (2 PLACES) WT. CHG. NEG.	3-29-43	ACCAMP
D	(1) BM AN-BAL-ALLOY-MATERIAL WAS		
	ALCLAD-47A11-A SPEC. WAS 47AB-T		
	WT. CHG. NEG.	5-1-43	KOBUSCH
E	AN526-DD832-8(4) & AC372-		
	DD832(8) REPLACES QB32-8 &		
	(4) ACCOMPANIES	5-26-43	ACCAMP

E.O. A80669

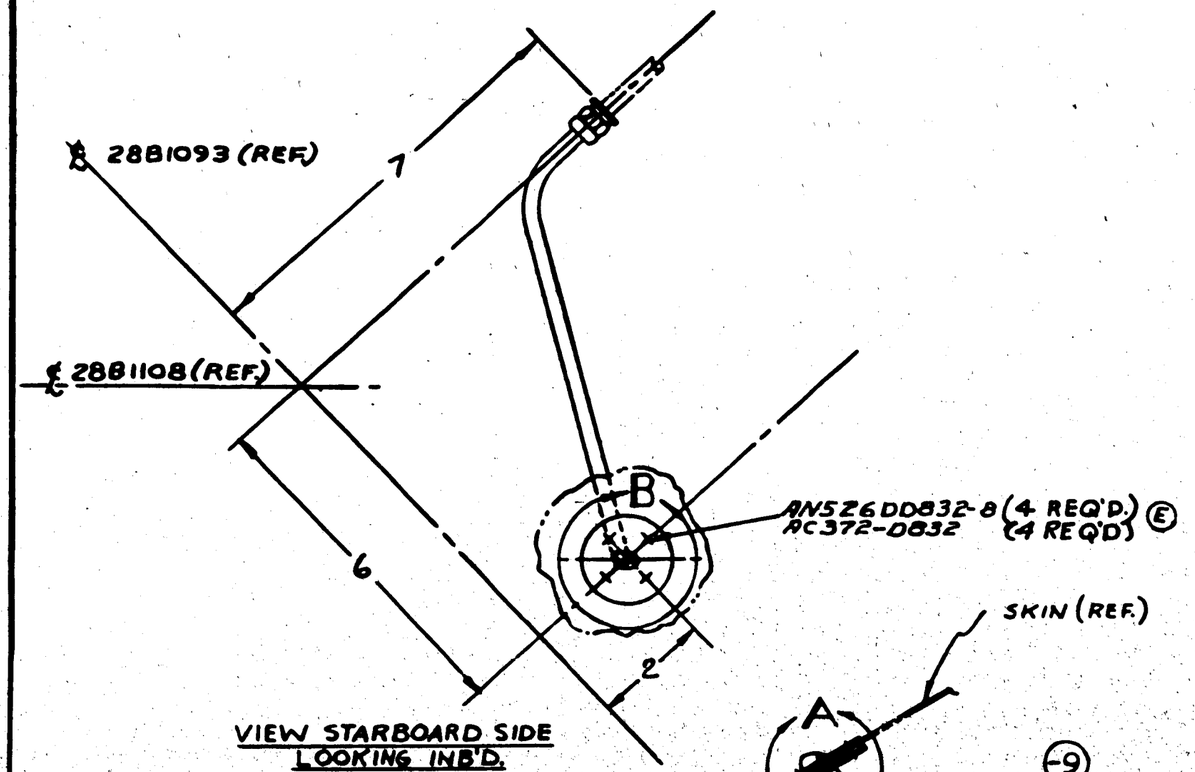

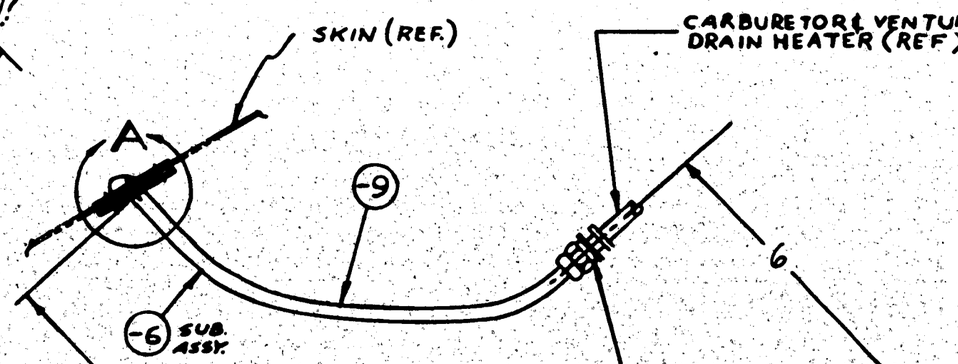

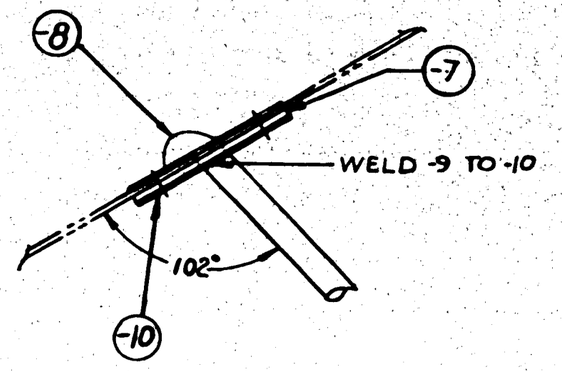

VIEW A
SCALE: 12"=1'-0"

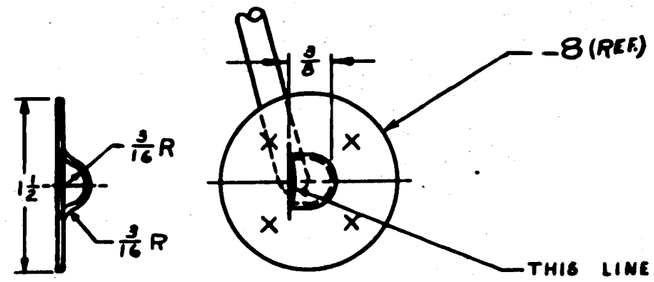

DETAIL -8

VIEW B
SCALE: 12"=1'-0"

M.C.R. 178-12
M.C.R. 23-17

PART No	STOCK	MATERIAL	SPEC.	LH REQ	RH REQ	LH REQ	RH REQ	LH REQ	RH REQ	LH REQ	RH REQ	LH REQ	RH REQ
PARTS LIST PER ASSY.				-0		-2		-3		-4		-5	
-10	.032 x ⅜ OD x 1⅜	AL. AL. SHT	47A11-T	1									
-9	.035 x ¼ O.D. x 13	AL. AL. TUB.	WW-T-787	1									
-6	SUB. ASS'Y.												
AC372-0832				4									
AN526DD832-8				4									
-8	.032 x ⅜ x ⅜	AL. ALLOY	47A11-A	1									
-7	.062 x ¼ x ⅜	HYCAR	COMM.	1									
-6	SUB. ASS'Y.			1									
AC811BT-4D				1									
AC811T-4CS				1									

ASSY. DASH No.	MODEL	PART ASSY.	REQ.
PBY-5A		28F6731	1
PBY-5		28F6731	1

REQUIREMENTS PER AIRPLANE

REPLACES — .03#
REPLACED BY — ASY. WT.

LIMITS ON DECIMALS UNLESS OTHERWISE SPECIFIED: ± 1/32
SCALE: 6"=1'-0"
STAMP PART NUMBER WHERE SHOWN

AC
NAVY
HEAT TREAT | Z-P-GP | FINISH

FINKLE
9-29-42 | 4-1-43 | 10-17-42
DRAFT | CHECK | STRUCT | MAT | APPROV | ENG

NAME INSTALL-FURN-DRAIN-CARBUR'TR PURGE-EMPENN. ANTI-ICING HEATER
CONSOLIDATED AIRCRAFT CORP. San Diego, Calif.

OPP. HAND
DWG. SIZE D
28F6781

APPROVED FOR TOOLING BY
P.B. Humphreys

R

28F6781

LET	ALTERATION	DATE	BY
A	ADDED MONEL RIVET W/2 - 6 PLACES & MONEL RIVET #1 - 10 PLACES - TO W/M	10-19-42	
B	W/-6L, -6R, -7, -8 & -9, CHANGE OF PART'L. DIG WAS .020. WT. CHG. NEG.	12-12-42	MACHAN
C	REMOVED FROM BIM FOR -6 4/R, -7-8-9 "ST. ST'L" & ANC 20-3-787 & REPLACED BY "NOTED." ADDED NOTE #2. NO WT. CHG.	12-1-43	LARSEN

E.O.A 902.21

NU45-50 ST. ST'L NUTPLATE (79HAI-02 ELASTIC STOP NUT)
RIV.2 (3/32 x 1/4 CT'S'K MONEL)
2 PLACES AS SHOWN

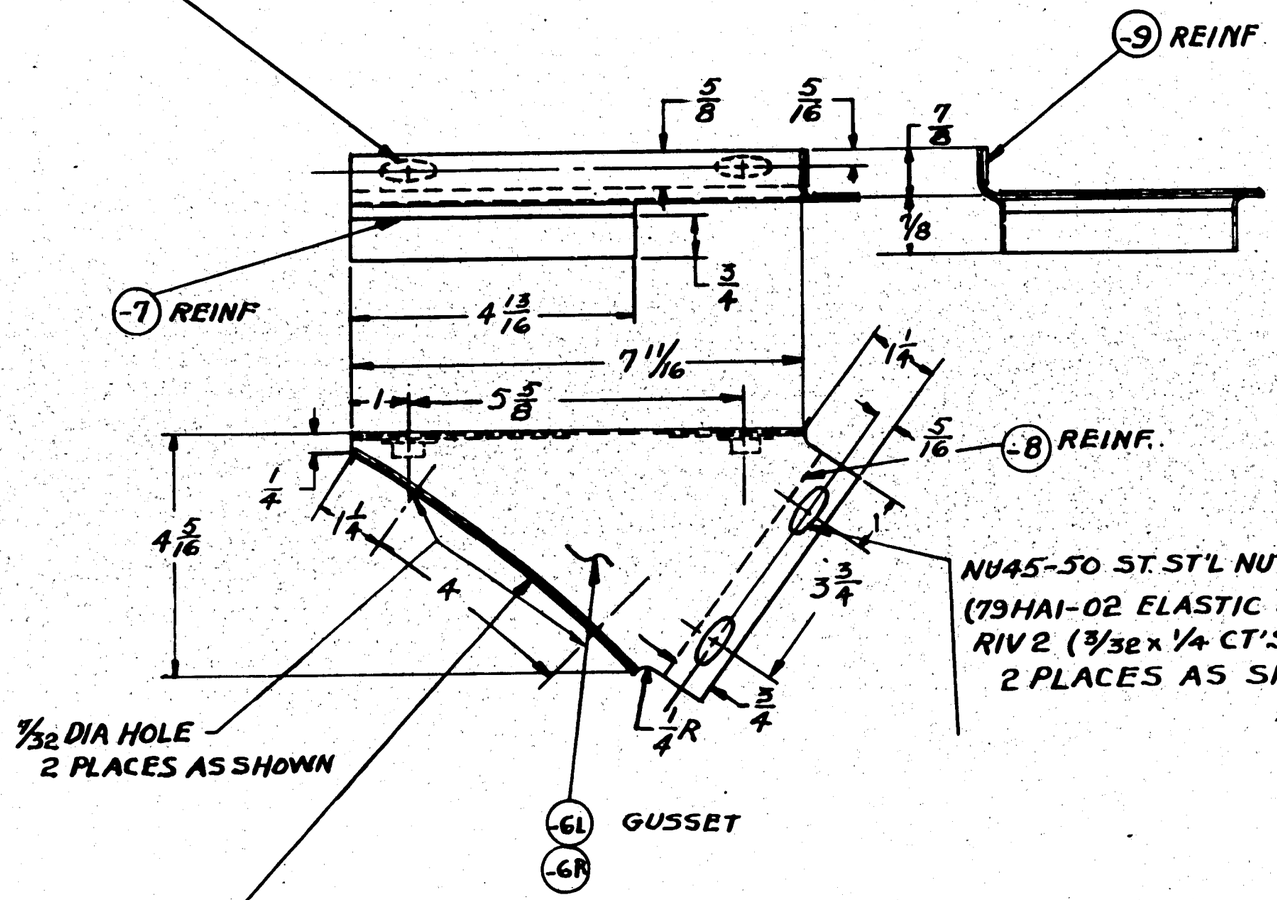

NU45-50 ST. ST'L NUTPLATE
(79HAI-02 ELASTIC STOP NUT)
RIV 2 (3/32 x 1/4 CT'S'K MONEL RIVET)
2 PLACES AS SHOWN

NOTES:
1.- SPOTWELD ALL PARTS TOGETHER USING RIV. #1 (3/32 x 3/16 CTSK MONEL RIVET) AT CORNERS & WHEREVER NECESSARY.
© 2- MATERIAL FOR -6 4/R, -7, -8, -9 MAY BE: -
(A) STAINLESS STEEL SHEET, SPEC. AN-QQ-S-757, COND. A, OR
(B) STAINLESS STEEL SHEET, SPEC. AN-QQ-S-772, COMP. G, COND. A.

C. NXS 13595 — -R PBY-5A 28F6787 1; -L PBY-5A 28F6787 1
C. 91876 *90 & *346 ON — -R PBY5 28F6787 1; -L PBY5 28F6787 1

ASSY. DASH NO.	MODEL	NEXT ASSY.	QTY.

REQUIREMENTS PER AIRPLANE
REPLACES — .50# CALC. WT.
REPLACED BY — ACT. WT.
UNLESS OTHERWISE SPECIFIED ± 1/32 — SCALE 6" = 1'0"
STAMP PART NUMBER WHERE SHOWN

#23-10

APPROVED FOR TOOLING BY R.B. Humphreys.

PART NO.	STOCK	MATERIAL	SPEC.	LH REQ.	RH REQ.	LH REQ.	RH REQ.	LH REQ.	RH REQ.	LH REQ.	RH REQ.	LH REQ.	RH REQ.
RIV2	(3/32 x 1/4 MONEL RIVET)			8	8								
RIV1	(3/32 x 3/16 MONEL RIVET)			10	10								
NU45-50	(79HAI-02 ELASTIC STOD NUT)			4	4								
-9	.018 x 3/4 x 8	NOTED	NOTED	1	1								
-8	.018 x 7/8 x 5 1/4			1	1								
-7	.018 x 7/8 x 6 3/4			1	1								
-6R	.018 x 3 1/2 x 7				1								
-6L	.018 x 3 1/2 x 7	NOTED	NOTED	1									
PARTS LIST PER ASSY.				-0		-2		-3		-4		-5	

AC
NAVY NONE — HEAT TREAT
NONE — FINISH
DRAFT 12/3/42 — CHECK — STRUCT — ENG — APPROV — ENG.

NAME GUSSET
HEAT EXCH. EXIT DUCT - RIGHT
OPP. HAND 28F6795-R
CONSOLIDATED AIRCRAFT CORP. SAN DIEGO, CALIF.
DWG. D SIZE 28F6793

R 12/42 28F6793

LET	ALTERATION	DATE	BY
A	-6 WAS -0, CREATED -7		

E.O. # AS16888

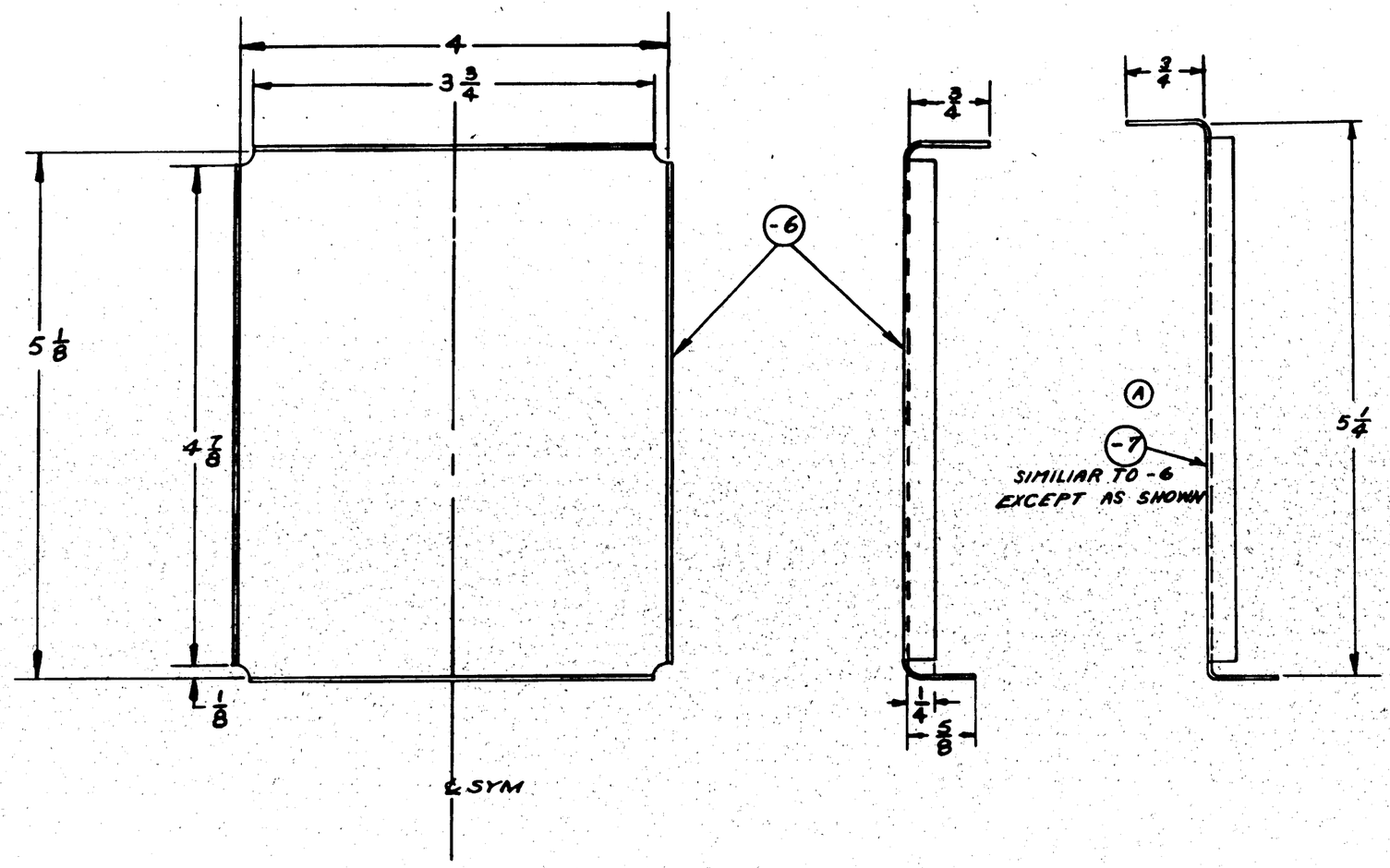

FINISH CODE	
Z	ANODIC TREATMENT
P	P-27 PRIMER
AP	ALUMINIZED PRIMER
C	CADMIUM PLATE

GP GREEN PRIME

CONT. NO. 91876
CONT. NO. 88476
CONT. NO. 88477

ASSY. DASH NO.	MODEL	NEXT ASSY.	QUA.
-7	PBY-5	28F7396	1
-7	PBY-5A	28F7396	1
-6	PBY-5B	28F7396	1

REQUIREMENTS PER AIRPLANE

REPLACES — CALC WT. .10

REPLACED BY — ACT. WT.

UNLESS OTHERWISE SPECIFIED DIMENSIONS ± 1/32 — SCALE 12" = 1'-0"

STAMP PART NUMBER WHERE SHOWN

PART No.	STOCK	MATERIAL	SPEC.	LH REQ.	RH REQ.	LH REQ.	RH REQ.	LH REQ.	RH REQ.	LH REQ.	RH REQ.	LH REQ.	RH REQ.
-7	.032 X 4 7/8 X 7	ALCLAD	47A8-T										
-6	.032 X 4 7/8 X 6 7/8	ALCLAD	47A8-T										

PARTS LIST PER ASSY.

AC		LINN	GMANDYS	CERBERUS E. RATED	ARM-STRONG	ZUCK
NAVY NOTED	Z-P-26P	6-29-42			6-11-42	
HEAT TREAT	FINISH	DRAFT	CHECK	STRUCT	MAT	APPROV	ENG

OPP. HAND

NAME GUSSET-STOWAGE MK 2C
PELORUS DRIFT SIGHT

CONSOLIDATED AIRCRAFT CORP. SAN DIEGO, CALIF.

DWG. SIZE D

28F6814

R

LET	ALTERATION	DATE	BY

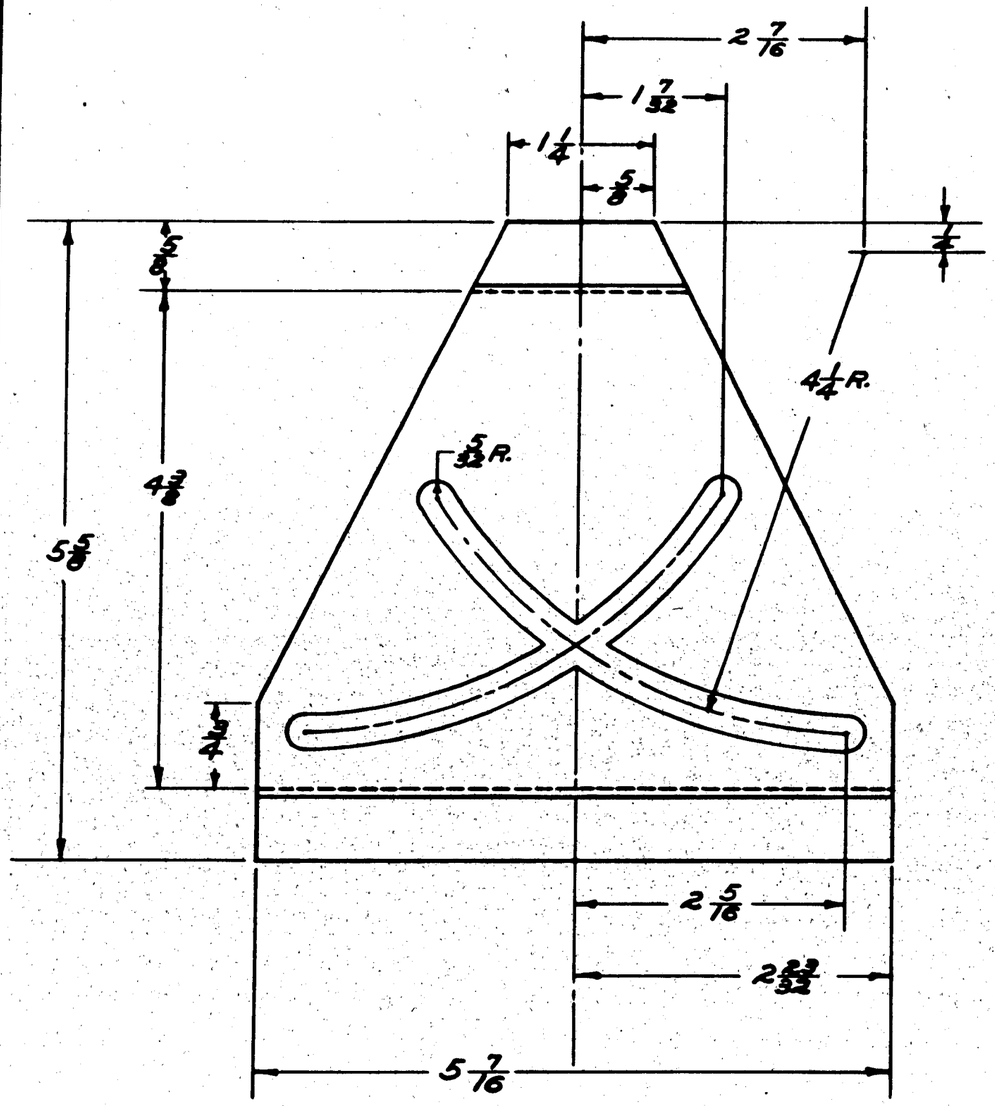

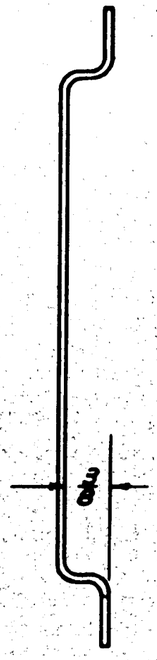

NOTE:
ALL BEND RADII 1/8.

CONTRACT NO. 31876 SHIP NO. 21 & ON

ASSY. DASH NO.	MODEL	NEXT ASSY.	REQ.
P6P-5		28F6816	1

REQUIREMENTS PER AIRPLANE

REPLACES	.17# CALC WT.
REPLACED BY	ACT. WT.
± 1/32	SCALE 12" = 1'-0"

STAMP PART NUMBER WHERE SHOWN

PART NO	STOCK	MATERIAL	SPEC	LH REQ.	RH REQ.	LH REQ.	RH REQ.	LH REQ.	RH REQ.	LH REQ.	RH REQ.	LH REQ.	RH REQ.
	.051X5½X6½	ALCLAD	47A9-T	-0		-2		-3		-4		-5	

PARTS LIST PER ASSY.

A C			T. PETERS	HALLIDAY	GERDES		8-14	ZUCK	
NAVY	Z-P-6P		7-17-42	7-24-42		MRW	ABNETT & MR VICKS	8-13	
HEAT TREAT	FINISH	DRAFT	CHECK	STRUCT	MAT	APPD	ENG		

NAME PLATE-DAMPER-FURNS:-
"Y" HOT AIR DUCT ASSEMBLY

OPP HAND

CONSOLIDATED AIRCRAFT CORP. SAN DIEGO, CALIF

SIZE D

28F6818

LET	ALTERATION	DATE	BY
A	RELOCATED 4 (.1935) HOLES. ADD'D		
	WAS 1 31/32 & 1 5/8 WAS 1 45 (NO WT. CHG)	3-15-43	[illegible]

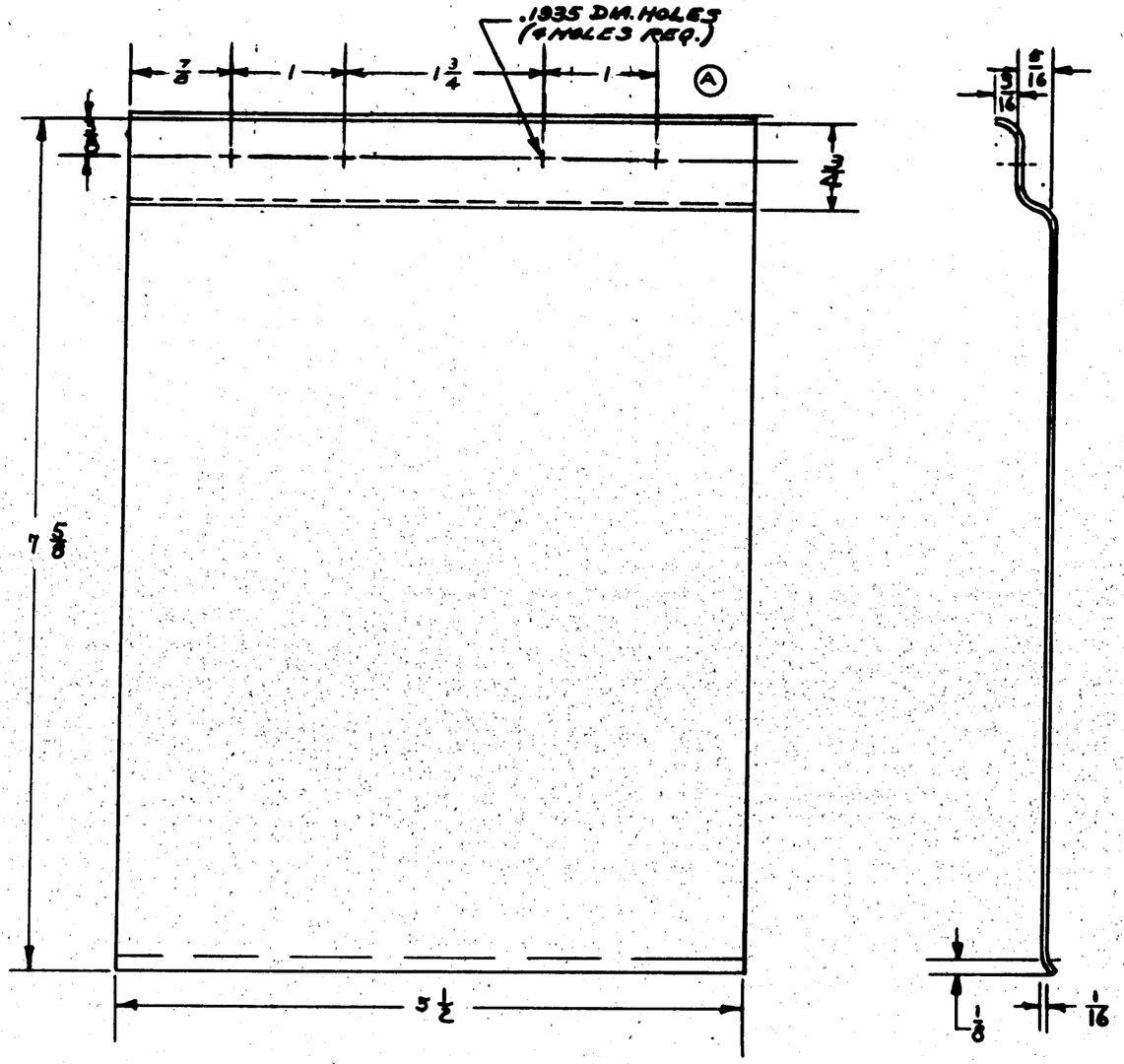

CONTRACT "NO76 SHIP "91 & ON

ALL BEND RADII 3/16

ASSY. DASH NO.	MODEL	NEXT ASSY.	QTY.
	PBY-5	28F6815	2

REQUIREMENTS PER AIRPLANE

REPLACES V — GALC WT. .284

REPLACED BY — ADV. WT.

UNLESS OTHERWISE SPECIFIED ± 1/32 — SCALE 12" = 1'-0"

STAMP PART NUMBER WHERE SHOWN

PART NO.	STOCK	MATERIAL	SPEC.	LH REQ. -0	RH REQ. -0	LH REQ. -2	RH REQ. -2	LH REQ. -3	RH REQ. -3	LH REQ. -4	RH REQ. -4	LH REQ. -5	RH REQ. -5
	.051 x 5 7/8 x 8 1/4	ALCLAD	47A8-T										

PARTS LIST PER ASSY.

AC		6-13-43	THERMAL	GREEN			ZVSH
NAVY		BOLTS 7-17-43			MRW		MVW
HEAT TREAT	FINISH	DRAFT	CHECK	STRUCT	MAT	APPROV.	STRS.

NAME DAMPER - FURNS - "Y" HOT AIR DUCT ASSEMBLY

OPP HAND

CONSOLIDATED AIRCRAFT CORP. SAN DIEGO, CALIF.

DWG. SIZE D — 28F6819

R

LET	ALTERATION	DATE	BY
A	1" DIA REF ADDED	7/22/42	MALLMAN
B	1 31/32 R WAS 2R 1 31/32 D WAS 2 R (WT CHG. NEGL.) S-6	7/29/42	MALLMAN

E.O. A95913

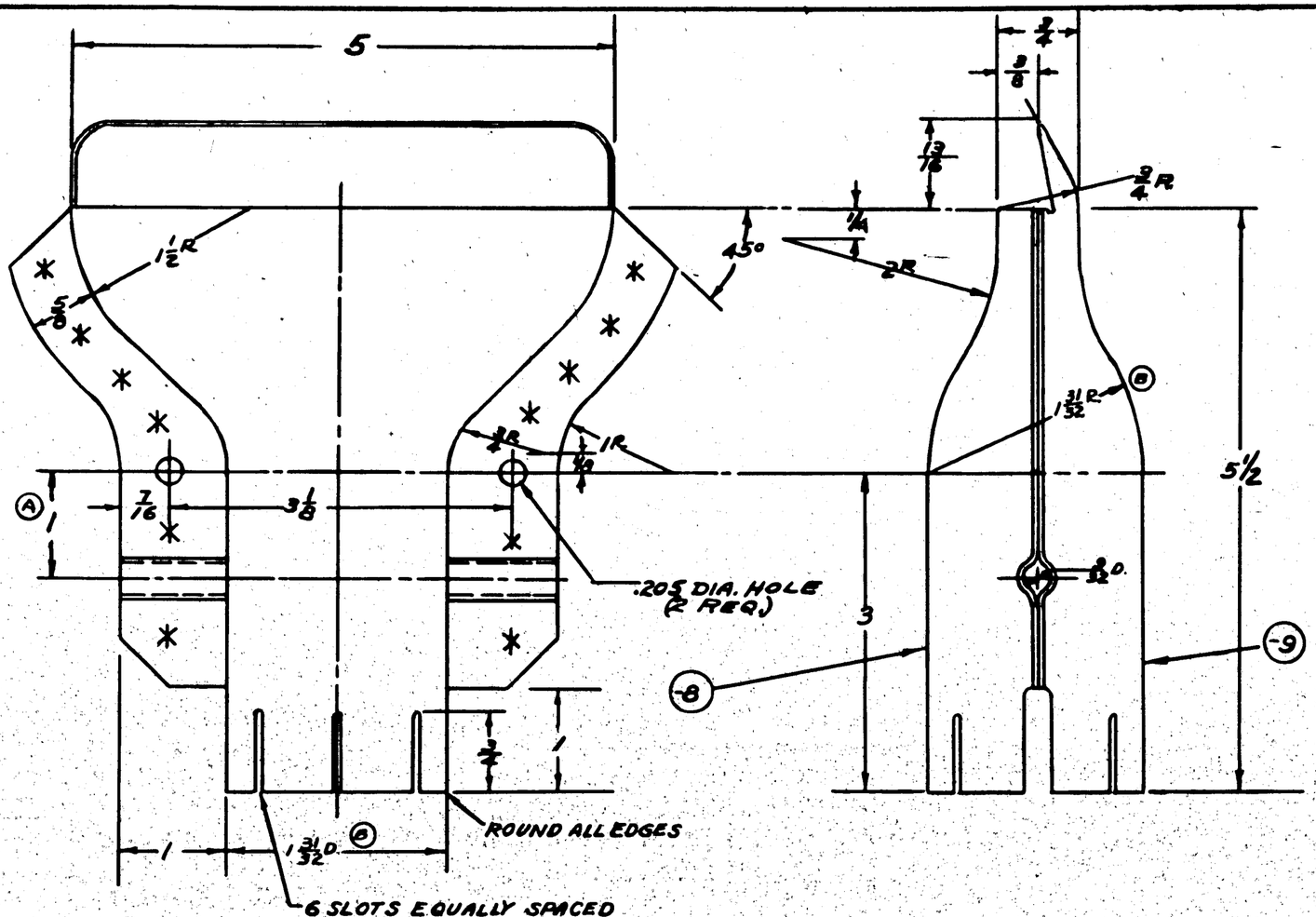

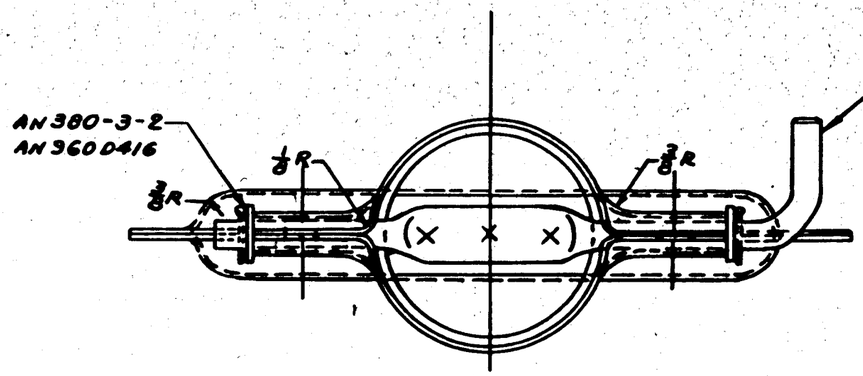

-6 SUB ASSY. FOR BOMBERS WINDOW
-7 SUB ASSY. FOR PILOTS WINDOW.

CONT. 91876 ON 91404 →

ASSY. SALES NO.	MODEL	NEXT ASSY.	SEE
-7	PBY-5	28F6833	
-6	PBY-6	28F6833	

REQUIREMENTS PER AIRPLANE

REPLACES	.15 GALS WT.
REPLACED BY	ACT. WT.
SCALE: 1/32	SCALE: 12" = 1'0"

STAMP PART NUMBER WHERE SHOWN

PART NO.	STOCK	MATERIAL	SPEC.	LH REQ.	RH REQ.	LH REQ.	RH REQ.	LH REQ.	RH REQ.	LH REQ.	RH REQ.	LH REQ.	RH REQ.
PARTS LIST PER ASSY.				-0		-2		-3		-4		-5	
-9	.040 X 7 X 8	ALCLAD	17AB-T										
-8	.040 X 6 X 8	ALCLAD	17AB-T										
	-6 SUB ASSEM.												
-9	.040 X 7 X 8	ALCLAD	17AB-T										
-8	.040 X 6 X 8	ALCLAD	17AB-T										
	-7 SUB ASSEM.												
28F6838													
AN 960 D 416													
AN 380-C3-2													

A C		MALLMAN 7/24/42							
NAVY ——	Z-P-GP								
HEAT TREAT	FINISH	DRAFT	CHECK	STRUCT	MAT	APPROV	ENG.		
			MRW			ARMSTRONG	McVICKER		

NAME: OUTLET - FURNS. DEFROSTER TUBE

CONSOLIDATED AIRCRAFT CORP. SAN DIEGO, CALIF.

OPP. HAND —

DWG. SIZE: D

28F6832

✱ SPOTWELDING SYMBOL
THIS SYMBOL INDICATES SPOTWELDING RIVETS ARE NOT INDICATED ON THIS DRAWING BY SYMBOLS.

R

LET	ALTERATION	DATE	BY

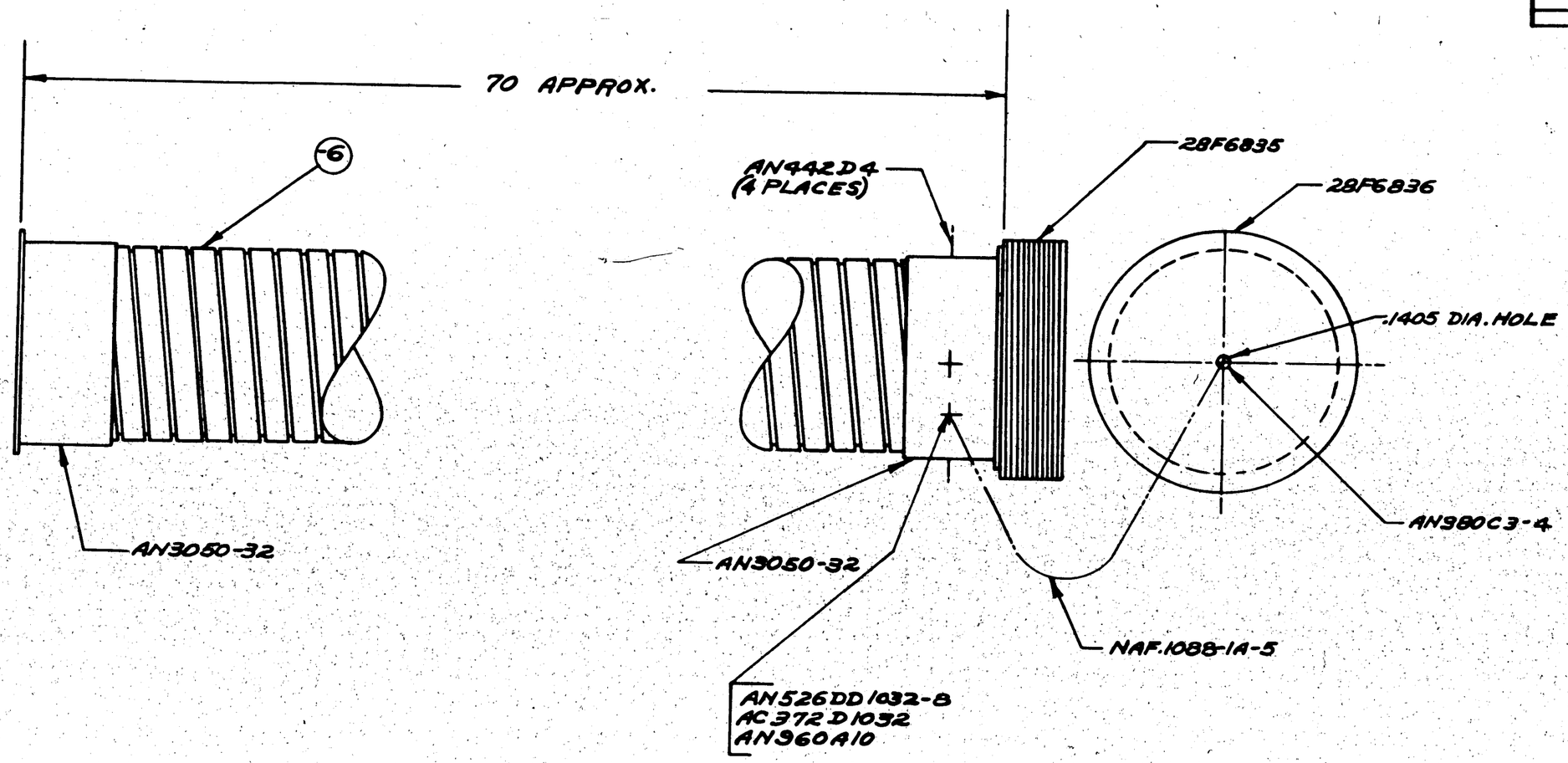

| | | |

E.O. A33817

LET	ALTERATION	DATE	BY
	[illegible]		SMITH

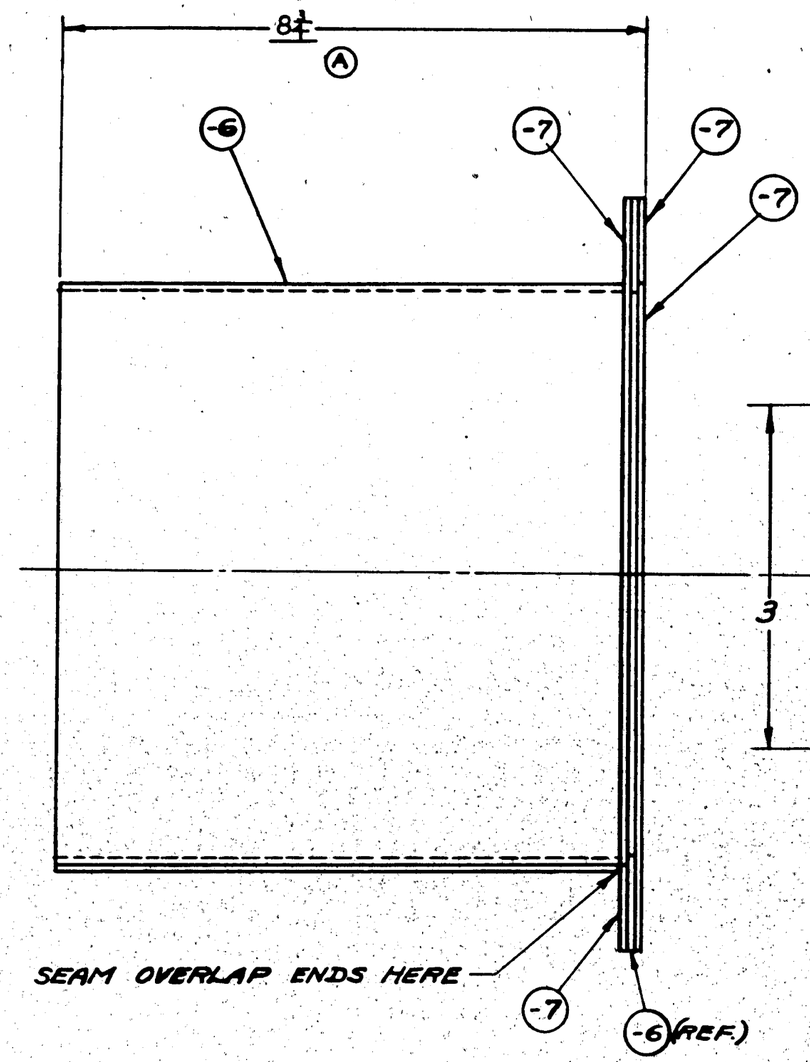

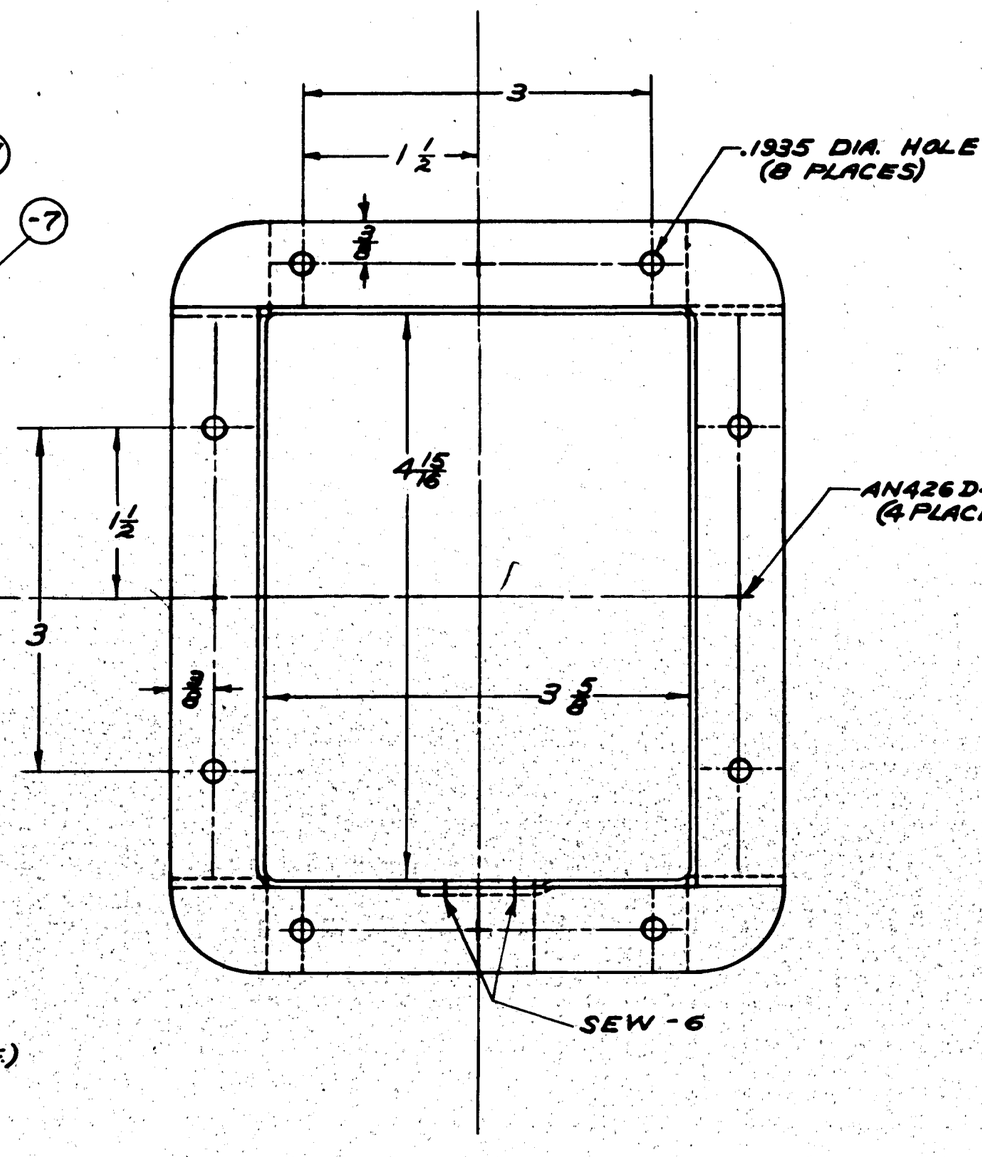

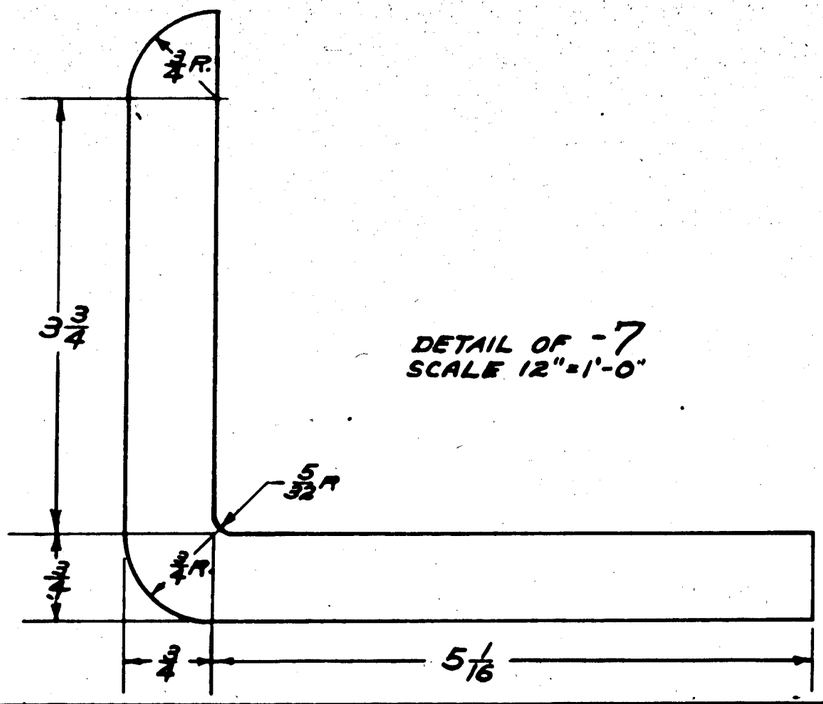

DETAIL OF -7
SCALE 12"=1'-0"

31 (ON

AN426D4

ASSY. DASH NO.	MODEL	NEXT ASSY.	REQ.
	PBY-5	28F6815	1

REQUIREMENTS PER AIRPLANE

REPLACES -5 CALC WT.

REPLACED BY ACT WT

LIMIT OF ENGINEERING TOLERANCE UNLESS OTHERWISE SPECIFIED ± 1/32

SCALE 12"=1'-0"

STAMP PART NUMBER WHERE SHOWN

PART No.	STOCK	MATERIAL	SPEC.	LH REQ.	RH REQ.	LH REQ.	RH REQ.	LH REQ.	RH REQ.	LH REQ.	RH REQ.	LH REQ.	RH REQ.
	PARTS LIST PER ASSY.			-0		-2		-3		-4		-5	
-7 -6	.051 x 4 7/8 x 6 1/8 x 9 x 18	ALCLAD	47AB-T PAR 15-25	1									

A C		STRUCTURAL	MALLIMAN			8	ZUCK
NAVY	E-P-GP -7 ONLY	7-22-42	7/24/42	GERBER	MRW	ARMSTRONG	MALVIHER
HEAT TREAT	FINISH	DRAFT	CHECK	STRUCT	MAT	APPROV	ENG.

NAME COUPLING - FURN. - CENTRAL HEATING SYSTEM

CONSOLIDATED AIRCRAFT CORP. San Diego, Calif.

OPP. HAND

DWG. D SIZE

28F6844

R

LET	ALTERATION	DATE	BY

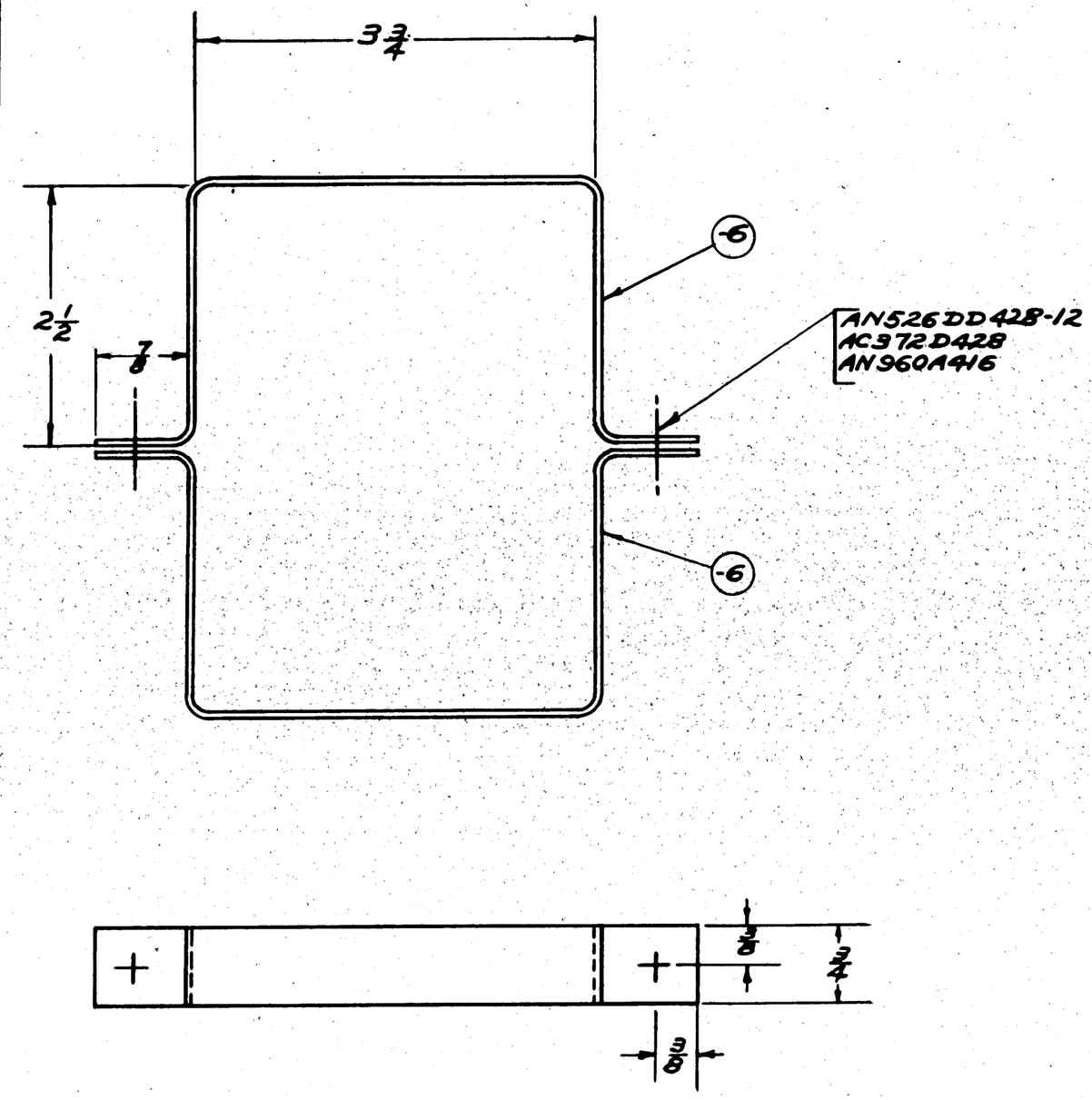

NOTE:
ALL BEND RADII 5/32

AN960A416 4
AC372D428 2
AN526DD428-12 2

ASSY. DASH NO.	MODEL	NEXT ASSY.	QTY.
	P8Y-5	28F6837	1

REQUIREMENTS PER AIRPLANE

REPLACES	.2# CASE WT.
REPLACED BY	ASS'Y. WT.
UNLESS OTHERWISE SPECIFIED ± 1/32	SCALE 12"=1'-0"
STAMP PART NUMBER WHERE SHOWN	

PART No.	STOCK	MATERIAL	SPEC.	LH REQ.	RH REQ.	LH REQ.	RH REQ.	LH REQ.	RH REQ.	LH REQ.	RH REQ.	LH REQ.	RH REQ.
PARTS LIST PER ASSY.				-0		-2		-3		-4		-5	
-6	.064X 3/4 X 6"	ALCLAD	47AB-T										

AC		TRACED	WALL-MANN	CARDEN			ZUCK
NAVY	Z-P-GP	7-28-42	7/28/42		MRW		ARCHIVED EA 2-15
HEAT TREAT	FINISH	DRAFT	CHECK	STRUCT	MAT	APPROV.	DRG.

NAME CLAMP-FURN.-FLEXIBLE COUPLING-CENTRAL HEATING SYSTEM

OPP. HAND

CONSOLIDATED AIRCRAFT CORP. SAN DIEGO, CALIF.

DRG. SIZE D

28F6845

R

LET	ALTERATION	DATE	BY

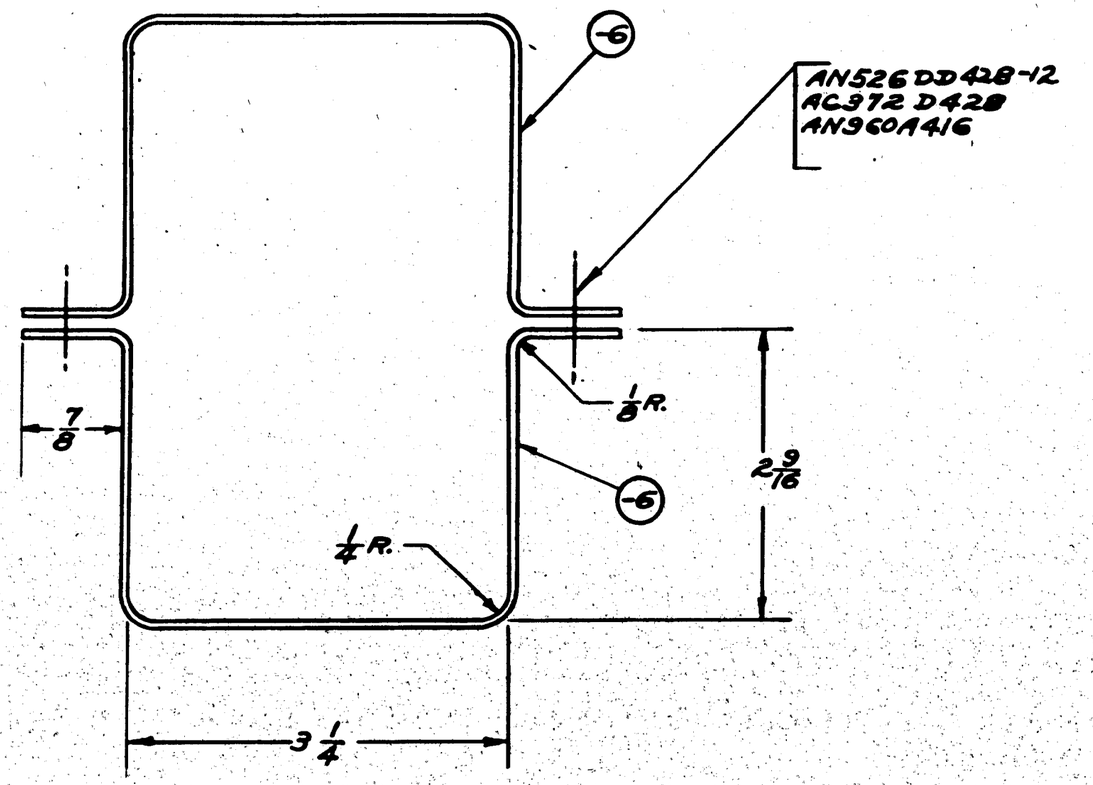

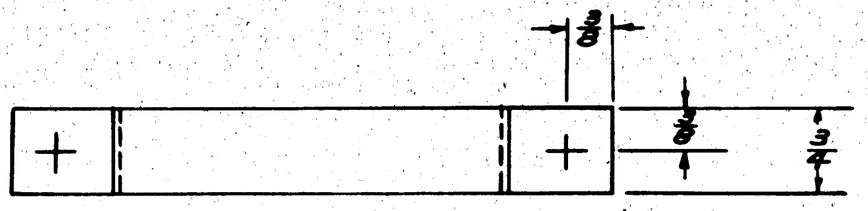

AN960A416
AC372D428
AN526DD428-12

4
2
2

PART No	STOCK	MATERIAL	SPEC.	LH REQ.	RH REQ.	LH REQ.	RH REQ.	LH REQ.	RH REQ.	LH REQ.	RH REQ.	LH REQ.	RH REQ.
-6	.064 X 7/8 X 10	ALCLAD	47AR-T	2									
PARTS LIST PER ASSY.				-0		-2		-3		-4		-5	

PBY-5 | 28F6837 | 2
ASSY. DASH NO. | MODEL | NEXT ASSY. | QUAN.

REQUIREMENTS PER AIRPLANE

REPLACES | .2# CALC. WT.

REPLACED BY | ACT. WT.

SCALE 12" = 1'-0"

STAMP PART NUMBER WHERE SHOWN

AC									
NAVY	Z-P-GP	PJ29-42	7/16/42	GERSEN	NRW	ARM-STRONG	BUCK		
HEAT TREAT	FINISH	DRAFT	CHECK	STRUCT	MAT	APPROV	ENG.		

NAME CLAMP-FURN.-AFT FLEXIBLE COUPLING-CENTRAL HEATING SYSTEM

CONSOLIDATED AIRCRAFT CORP. San Diego, Calif.

OPP. HAND

SYM. D SIZE

28F6848

REV R

F.L.R. 4376-A

LET	ALTERATION	DATE	BY
A	THICKNESS OF MATL. 1/16" WAS 1/8"		
	NO WT. CHG.		

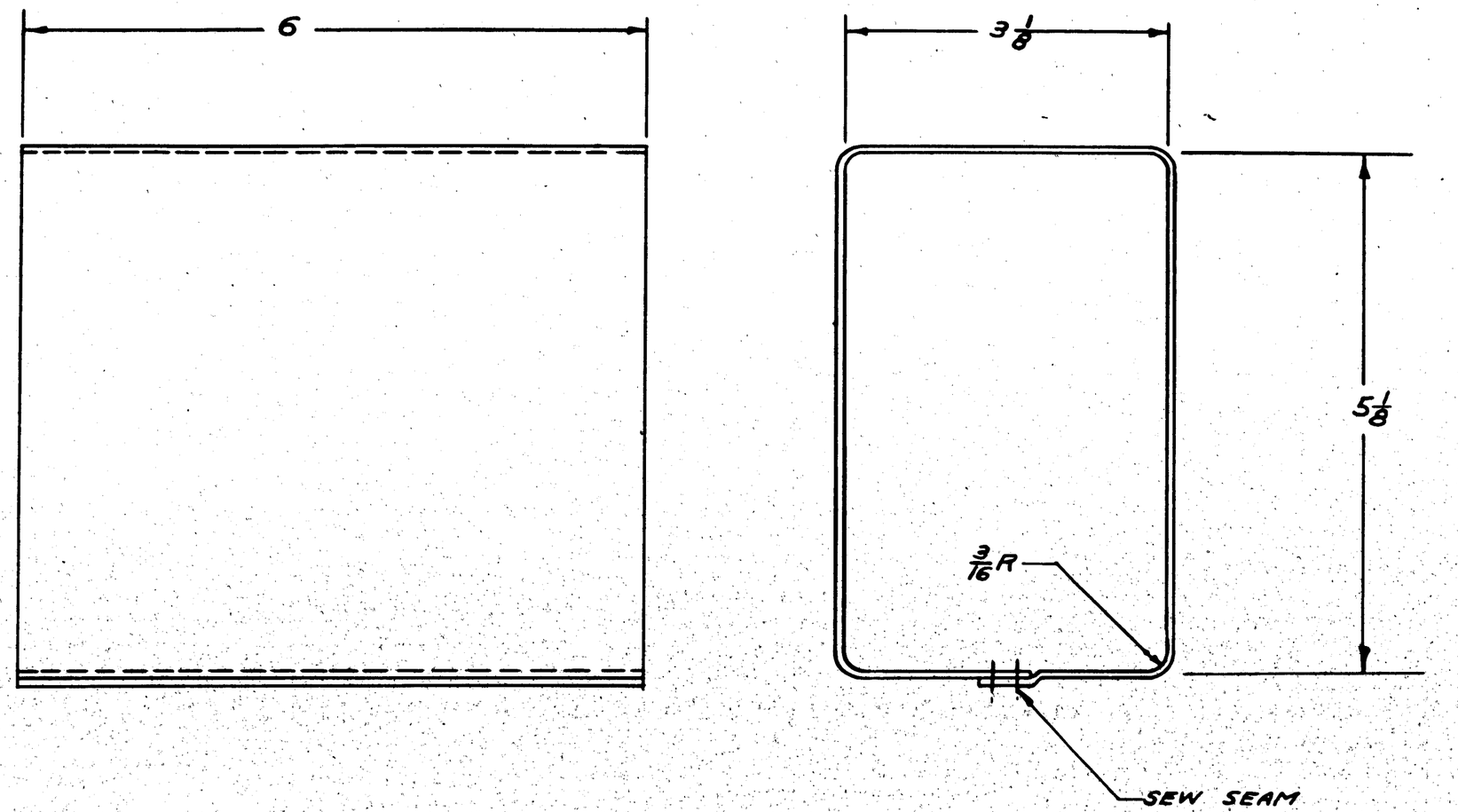

C.91876 91 ON

ASSY. DASH No.	MODEL	NEXT ASSY.	USED
	PBY-5	28F6037	

REQUIREMENTS PER AIRPLANE

REPLACES	.9 CALC WT.
REPLACED BY	ACT. WT.
UNIT OF DIMENSIONS UNLESS OTHERWISE SPECIFIED: In. Fr.	SCALE 12" 1'-0"
STAMP PART NUMBER WHERE SHOWN	

PART No	STOCK	MATERIAL	SPEC.	LH REQ.	RH REQ.	LH REQ.	RH REQ.	LH REQ.	RH REQ.	LH REQ.	RH REQ.	LH REQ.	RH REQ.
	1/16 X 6 1/2 X 17 1/2	ASBESTOS	FAB 13-2.5										
PARTS LIST PER ASSY.				-0		-2		-3		-4		-5	

A.C.		TRACED	RELEASED		ZUCK
NAVY NONE	NONE	7-26-43	11/6/43	GREER	M.R.W.
HEAT TREAT	FINISH	DRAFT	CHECK	STRUCT	MAT

NAME COUPLING-FURN.-AFT-FLEXIBLE CENTRAL-HEATING SYSTEM

CONSOLIDATED AIRCRAFT CORP. San Diego, Calif.

OPP. HAND

SIZE D

28F6849

R

LET	ALTERATION	DATE	BY
	CREATED -10 SUB ASSY. & ADDED		
	AN740-16P(1), AN5-12A(1), AC572-1092(1)		
	UNDER "C" WAS "NONE". WT. INCREASE .1000 TO 43		
B	ADDED NOTE "LAG ---- WRAPPING		
	& -11. WT. CHG NEG		
C	WELD" WAS "BRAZE" HEAT TREAT		
	NORMALIZE" WAS "NONE" NO WT. CHG.	2-3-43	

E.O. A 66681

E.O. B 0126

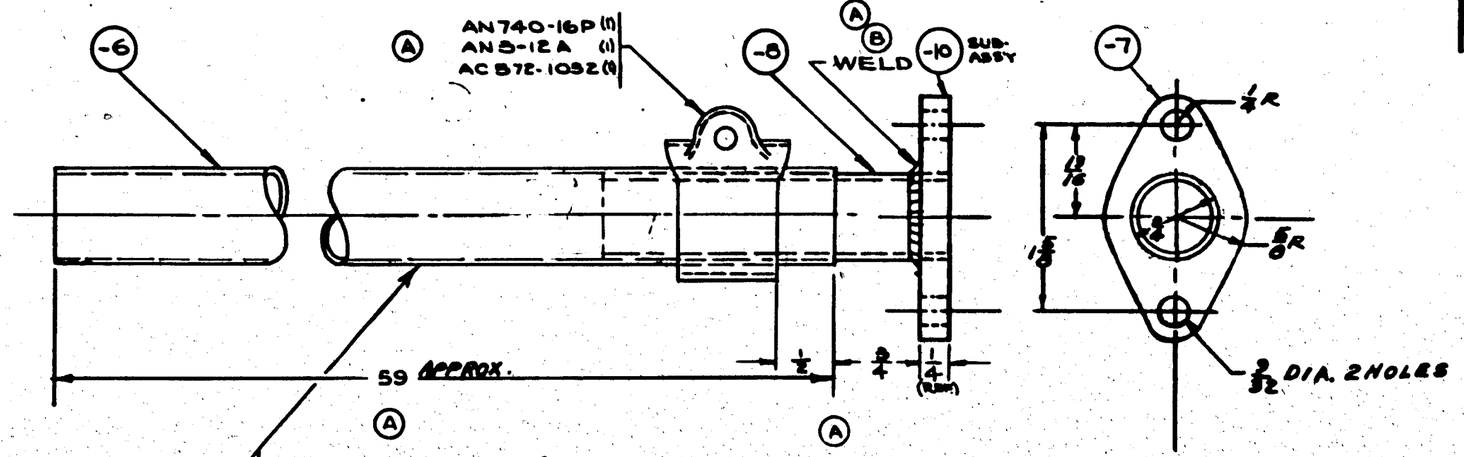

C* D1876 #D1 TO 345

PART No.	STOCK	MATERIAL	SPEC.	LH REQ.	RH REQ.	LH REQ.	RH REQ.	LH REQ.	RH REQ.	LH REQ.	RH REQ.	LH REQ.	RH REQ.
	PARTS LIST PER ASSY.			-0		-2		-3		-4		-5	
-8	1/4 OD X .058 X 8	CR. ST. TUBE	AN WW P 406	1									
-7	250 X 1 5/8 X 2 1/4	CHROME-MOLY STEEL	AN-QQ-S-685	1									
-10 SUB ASSY.													
				1									
AC572-1092				1									
AN5-12A				1									
AN740-16P				1									
-10 SUB ASSY													
-11	3/4 I.D. X .60 ASBESTOS TUBING (CAC. TU-72)			L									
	3/4 I.D. ASBESTOS PACKED .012 GA. GALV.												
-9	STL-FLEX. TUBING AMERI BRASS CO.			1									
	FINE V.A.C. OR EQUIV. T. CO.												

-0	PBV-5	28F6812	1				
ASSY. DASH NO.	MODEL	NEXT ASSY.	QUAN.				

REQUIREMENTS PER AIRPLANE

REPLACES — SALE WT.

REPLACED BY — ACT. WT.

SCALE: 12"-1'0"

STAMP PART NUMBER, WEIGHT (CENTER)

AC		3/27/42	TRACED	LEROY															
NAVY NORMALIZE	"C"	MILLMAN	3/27/42		MRW														
HEAT TREAT	FINISH	DRAFT	CHECK	STRUCT	DAY	APPROV	QUICK MACHINE & AIR CO.												

NAME: ASSY. - FURN. - EXHAUST TUBING.

CONSOLIDATED AIRCRAFT CORP. San Diego, Calif.

OPP. HAND

SIZE D

28F6851

LET	ALTERATION	DATE	BY
A	REMOVED 28EL690 FROM FACE OF ONG & IN B/M & REPLACED WITH 28EL690-6 CLIP (2) & 28EL690-7 BLOCK (2) W/HWT SCH.	11-20-41	CRAIG &
B	Q5106 D10-12 (4) WAS AN526PD1032-; B (4); ADDED Q810-D6-8 (4). WT. CHG. REQ.	1-12-43	BRADLEY

E.O.A 56364

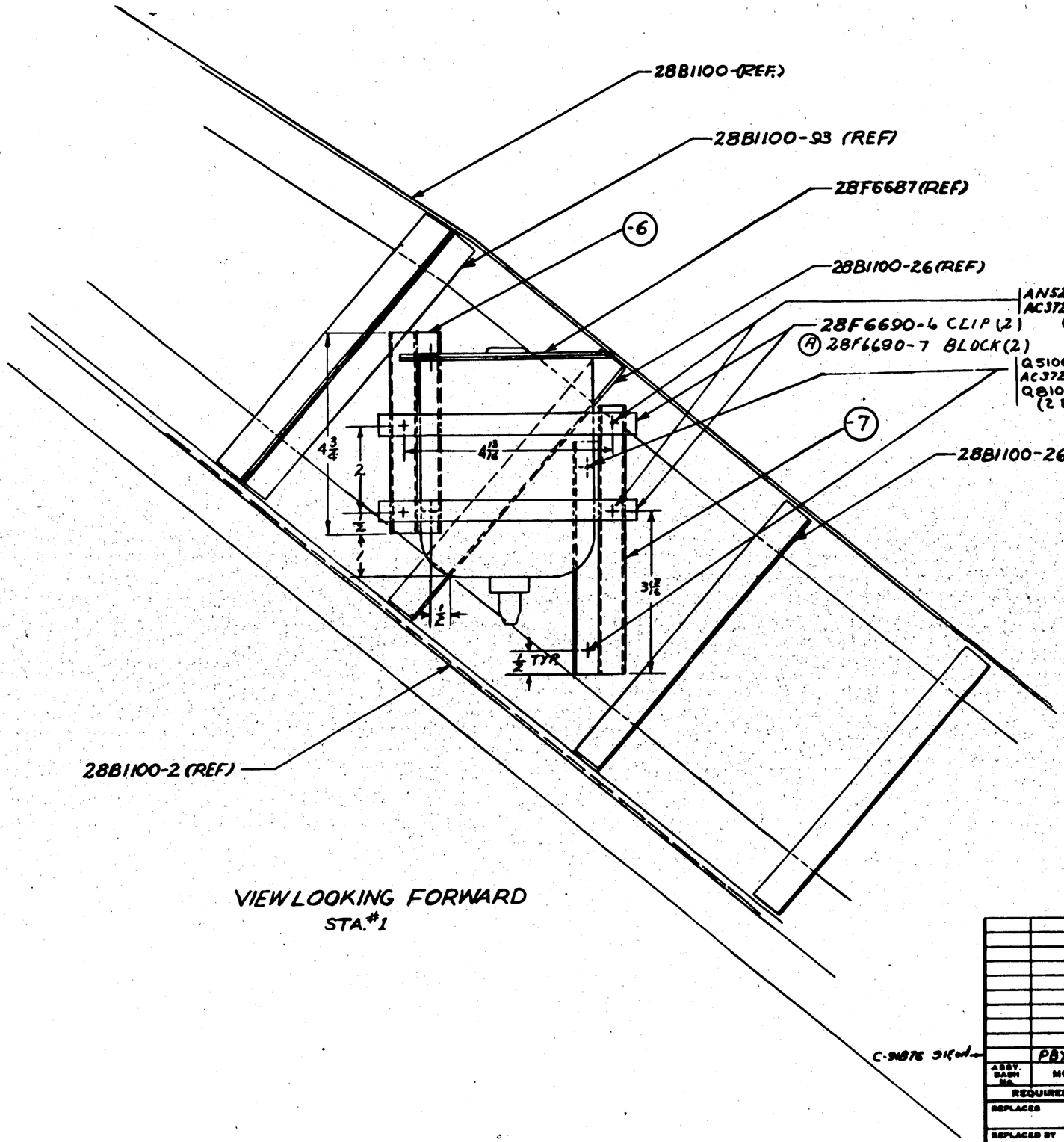

VIEW LOOKING FORWARD
STA. #1

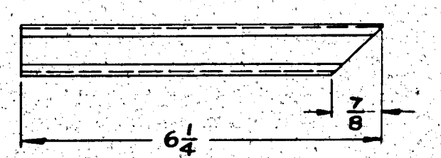

DETAIL -7

C-9876 SHEET

ASSY. DASH NO.	MODEL	NEXT ASSY.	REQ.
	PBY-5	28F6713	1

REQUIREMENTS PER AIRPLANE

REPLACES — 1.74 CALC. WT.

REPLACED BY — ACT. WT.

SCALE 6"=1'0"

STAMP PART NUMBER WHERE SHOWN

PART NO.	STOCK	MATERIAL	SPEC.	LH REQ.	RH REQ.	LH REQ.	RH REQ.	LH REQ.	RH REQ.	LH REQ.	RH REQ.	LH REQ.	RH REQ.
				-0		-2		-3		-4		-5	
	Q810-D6-8									4			
	AN526DD1032-28									4			
	AC372D1032									8			
	Q5106D10-12									4			
	28F6690-7									2			
	28F6690-6									2			
-7	Y-36-A-DRILL 3/16									1			
-8	Y-36-A-DRILL 4 3/16									1			

PARTS LIST PER ASSY.

AC		STOCK	Read					
NAVY —	Z-P-GP	8/20/42	9/2/42					
HEAT TREAT	FINISH	DRAFT	CHECK	STRUCT	MAT	APPROV	ENG.	

NAME INSTALL'N OVERFLOW RESERVOIR SPERRY SYSTEM

OPP. HAND

CONSOLIDATED AIRCRAFT CORP. SAN DIEGO, CALIF.

SIZE D

28F6855

R

E.O.A62231
E.O.A64069

LET	ALTERATION	DATE	BY
A	2 DIM. WAS 2 1/2, 5 1/16 WAS 4 7/16; WT. CHG NEG.	10-14-43	SMITH
B	CHANGED NOTE, (SPOTFACE 1/2 DIA. WAS 5/16 DIA.)	10-19-43	SMITH
C	IN B/M FOR -7 REMOVED (E-9) FROM SPEC., & IN H.T. BLK. ADDED "120,000 TO 135,000 #/in.²" REF. AIR/BRKTS. D RATE. (NO WT. CHG.)	6-2-44	ARNOLD
D	FOR -10 DIM. 1 3/4 WAS 1 3/8; 7/8 WAS 1; 5/8 WAS 3/4; 1 3/8 WAS 1 1/2 & 2 WAS 2 1/8. WT. CHG. NEG.	8-12-43	O. DAY
E	IN B/M, AT -6 & -9, REPLACED "CH. MOLY TUBE" & "AN-WW-T-850-A" WITH "NOTED" ON FACE, ADDED MATERIAL NOTE. NO WT. CHG.	9-29-43	HODIK

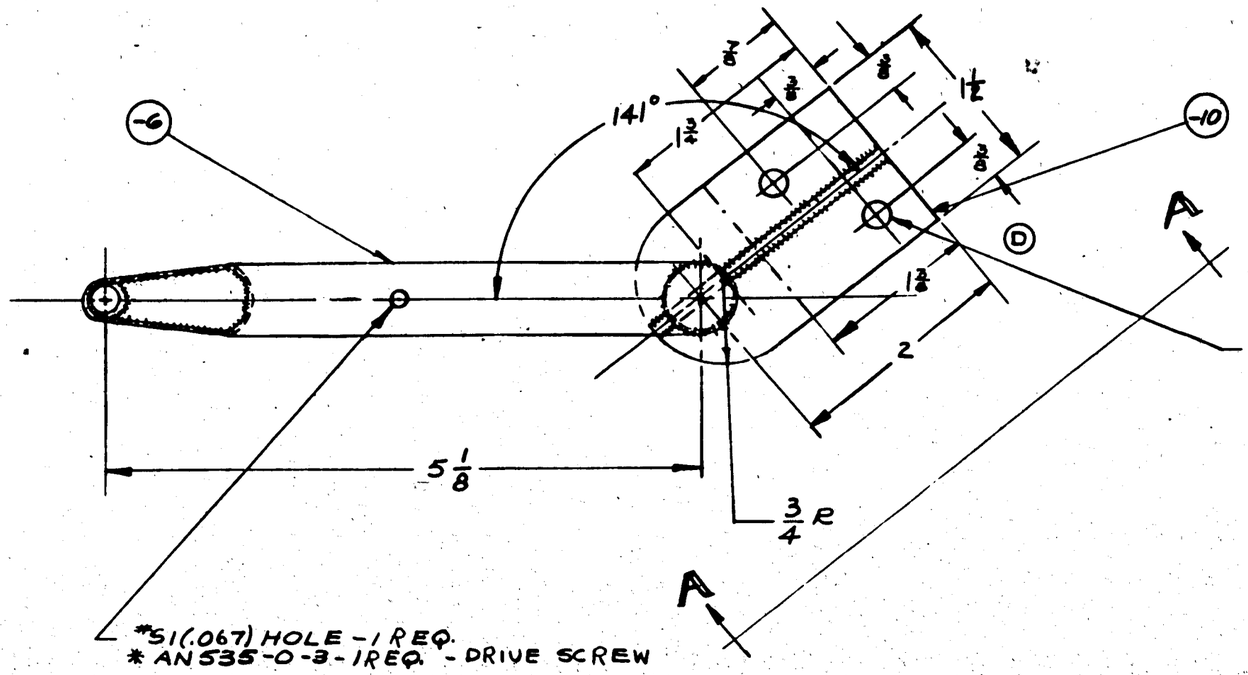

*10(.1935) HOLE (2 REQ)
SPOTFACE 1/2 DIA. TO CLEAN SURFACE
(B)

*51(.067) HOLE - 1 REQ.
* AN535-0-3 - 1 REQ. - DRIVE SCREW

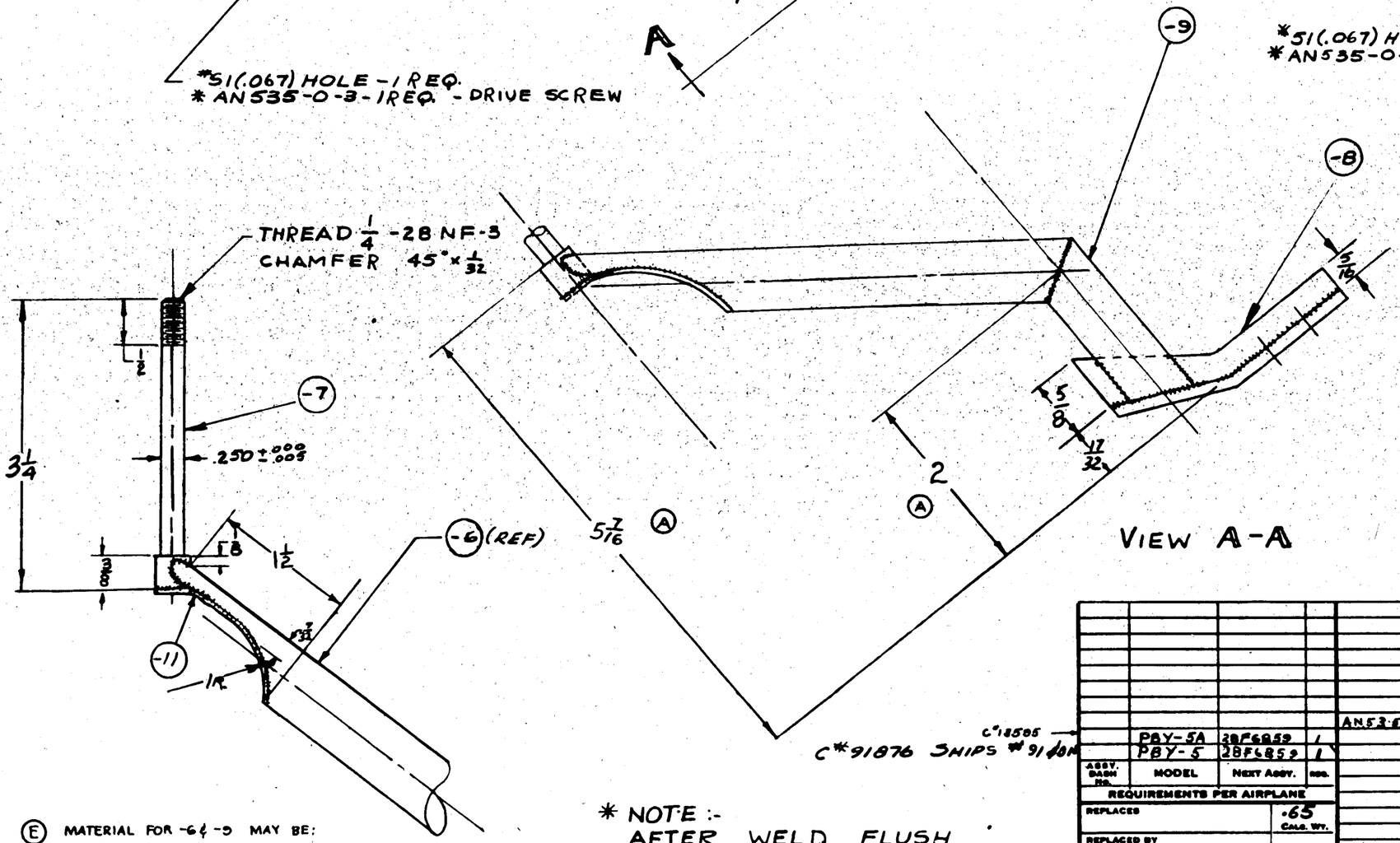

VIEW A-A

*51(.067) HOLE - 1 REQ.
*AN535-0-3 - 1 REQ. DRIVE SCREW

(E) MATERIAL FOR -6 & -9 MAY BE:
(A) S.A.E. X4130 CHR. MOLY STEEL TUBING, WELDED, SPEC. AN-T-3, OR
(B) X4130 CHR. MOLY STEEL TUBING, SEAMLESS, SPEC. AN-WW-T-850.

* NOTE :-
AFTER WELD FLUSH TUBING WITH H.R.O & SEAL.

C*18505
C*91876 SHIPS #91 ON

ASSY. DASH NO.	MODEL	NEXT ASSY.	REQ.
	PBY-5A	28F6859	1
	PBY-5	28F6859	1

REQUIREMENTS PER AIRPLANE

REPLACES — .65 CALC. WT.
REPLACED BY — ACT. WT.
LIGHT OR SHOWING UNLESS OTHERWISE SPECIFIED: ± 1/32 ∠ 1/2°
SCALE 12" = 1'-0"
STAMP PART NUMBER WHERE SHOWN

AN535-0-3 — 2

PART NO.	STOCK	MATERIAL	SPEC.	LH REQ. -0	RH REQ. -2	LH REQ. -3	RH REQ. -4	LH REQ. -5	RH REQ.
-11	.035 x 2 1/2 x 1	CH. MOLY STL.	AN-QQ-S-685	1					
-10	.125 x 1 1/2 x 3	CH. MOLY STL.	AN-QQ-S-685	1					
-9	5/8 O.D. x .035 x 4 1/2	NOTED	NOTED	1					
-8	.125 x 1/4 x 3	CH. MOLY STL.	AN-QQ-S-685	1					
-7	3/8 O.D. A ROD x 3 3/8	CH. MOLY STL.	AN-QQ-S-684	1					
-6	5/8 O.D. x .035 x 5 1/8	NOTED	NOTED	1					

PARTS LIST PER ASSY.

A.C.		LINN					
U.S. 120,000 TO NAVY 145,000 P.S.I.	C-P-GP	8-5-43	9/7/44		9-16-44		
HEAT TREAT	FINISH	DRAFT	CHECK	STRUCT	MAT	APPROV	ENG.

NAME BRACKET - MK 15 BOMB SIGHT ADAPTER SPOOL
CONSOLIDATED AIRCRAFT CORP. SAN DIEGO, CALIF.
OPP. HAND
DWG. SIZE D
28F6857

28F6857 R

LET	ALTERATION	DATE	BY
A	ADDED RIVET (MONEL) W/3-30 PLACES-TO P/M.	10-14-43	
B	-8,9 FOR 12 REQ'D-ADDED RIV-12 REQ'D	11-5-43	
C	TO FACE OF DWG., ADDED NOTE "REMAL-82-----STOP NUT CO." WT. CHG. REQ.	1-19-43	
D	ENG'D. MISLOCATED ARROW HEADS (No WT. CHG.)	3-1-43	
E	ON FACE OF PWO NOTE CAC NU 45-60.... PLACES, WAS NU 45-30 ST ST'L HIGH TEMP (ELASTIC STOP NUT CORP 76 HAI-02) RIV 3 (3/32 x 1/4 MONEL RIVET CTSK HD 6 PLACES IN 3/16-ASS'Y REMOVED NU45-30 6 REQ'D & RIV-3 18 REQ'D, ADDED CAC NU 45-60 6 REQ'D WT. CHG. REQ'D.	5-6-43	

E&A B0160

-9 SEAL STRIP

-10 REINFORCEMENT SPOTWELD TO -6 (REF)

$\frac{1}{32}$

D $\frac{1}{2}$

E

B $1\frac{23}{32}$

$3\frac{5}{16}$

$4\frac{7}{16}$

$4\frac{1}{2}$

$\frac{1}{2}$ $\frac{5}{8}$ 1

-8 SEAL STRIP

$2\frac{1}{4}$

$4\frac{1}{2}$

$\frac{7}{32}$ DIA. HOLE – 6 PLACES

RIV. 3 ($\frac{3}{32}$ X $\frac{1}{4}$ MONEL RIVET)

-11 REINFORCEMENT SPOTWELD TO -6 (REF.)

$2\frac{3}{8}$

$4\frac{3}{4}$

©

"CAC NU45-60 ST ST'L HIGH TEMP (6)
(ELASTIC STOP-NUT CORP. '79 HAI-S-02
UNION, NEW JERSEY)
SPOT WELD 12 PLACES Ⓔ

$4\frac{5}{16}$ R.

60°

120°

$\frac{1}{4}$

$\frac{1}{2}$

-10 (REF)
-11 (REF)

-6 SHROUD

-7 REINFORCEMENT SPOTWELD TO -6

BEND & RELIEF RADII TO BE $\frac{1}{8}$

APPROVED FOR TOOLING BY P.B. Humphreys.

MCR 178-3
MCR 23-M

ASSY. DASH NO.	MODEL	NEXT ASSY.	REQ.
	PBY-5A	28F6787	4
	PBY-5	28F6787	4

REQUIREMENTS PER AIRPLANE

REPLACES — CALC. WT.

REPLACED BY — ADV. WT.

SCALE 12"=1'-0"

STAMP PART NUMBER WHERE SHOWN

CAC NU 45-60
RIV 3

PART No.	STOCK	MATERIAL	SPEC.	LH REQ. -0	RH REQ. -2	LH REQ. -3	RH REQ. -4	LH REQ. -5	RH REQ.
-11	.018 X 1⅜ X 10	COR. RES. ST'L	6511 (AN)	1					
-10	.018 X 3⅜ X 10	COR. RES. ST'L	6511 (AN)	1					
-9	⅛ X 3⅜ X 10	NEO-ASBESTOS	AN 13-25	1					
-8	⅛ X 1⅜ X 10	NEO-ASBESTOS	AN 13-25	1					
-7	.018 X 5⅜ X 4	COR. RES. ST'L	6511 (AN)	2					
-6	.018 X 3 X 12	COR. RES. ST'L	6511 (AN)	1					

PARTS LIST PER ASSY.

AC								
NAVY 125 000 #	NONE		10-6					
HEAT TREAT	FINISH	DRAFT	CHECK	STRUCT	WT.	APPROV	ENG.	

NAME SHROUD ASSY - LOWER EXHAUST HEAT EXCHANGER

CONSOLIDATED AIRCRAFT CORP. SAN DIEGO, CALIF.

OPP. HAND

SIZE D

28F6764

R

LET	ALTERATION	DATE	BY
A	TO FACE ADDED NOTE REPLACING - "CEMENT 28F6864-7 PARTS TO 28F6864-8 WITH SUITABLE MATERIALS CEMENT." PRACTICE CHG. A.I.C. TO DATE. NO WI CHG	8-31-42	

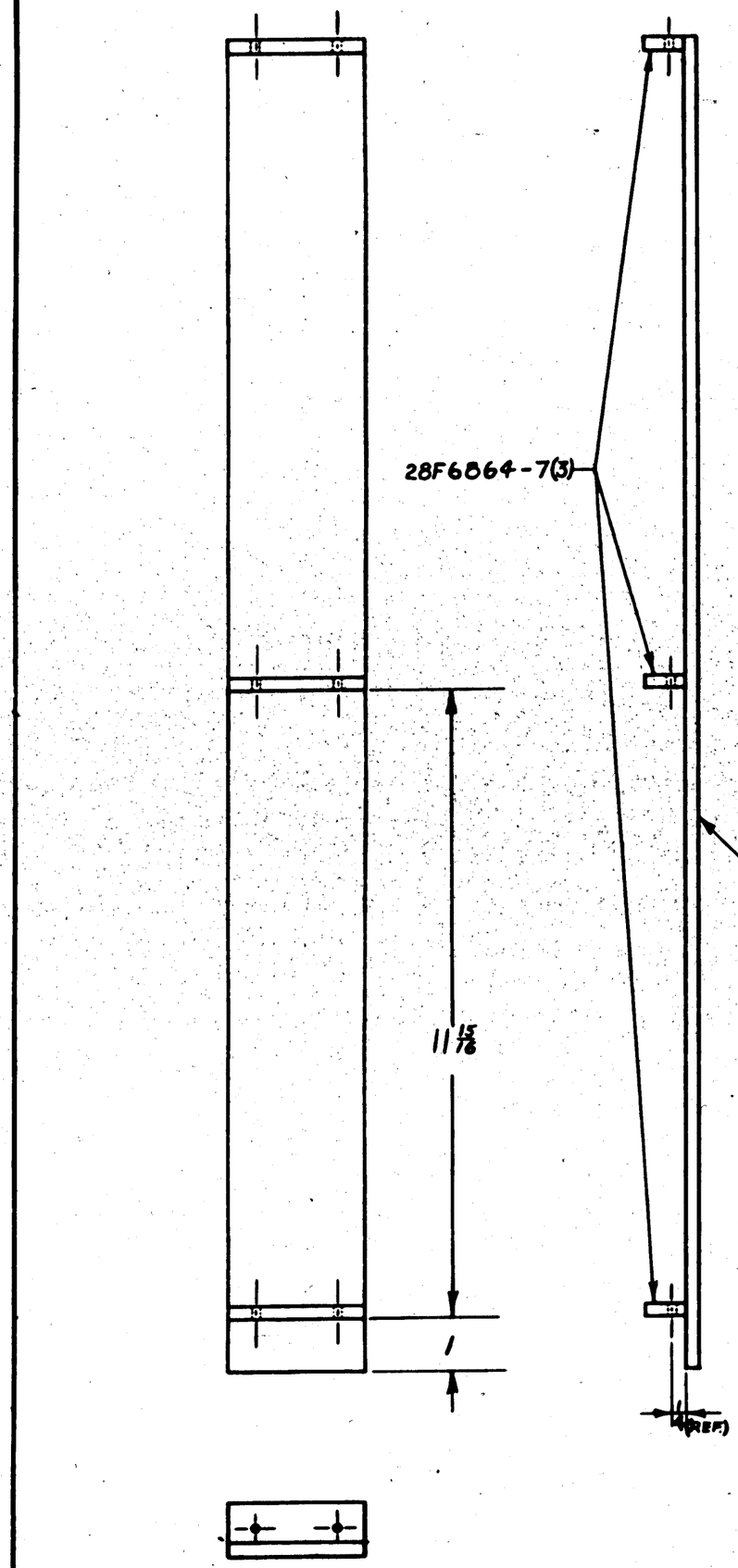

NOTE:-WHEN 28F6864-6 & 28F6864-7 ARE MADE OF PLEXIGLAS, CEMENT WITH ACRYLIC CEMENT (MELDG N-173 OR EQUIV.) ; WHEN MADE OF CELLULOSE-ACETATE, CEMENT WITH SYNTHETIC RESIN CEMENT (H. & E. EVERFAST OR EQUIV.)

C "284% "53 TO 146 & Hex(2) ALA] Ø2 .140
91876 (91 B ON)

ASSY. DASH NO.	MODEL	NEXT ASSY.	REQ.
	28-3AMN	28F6893	2
	PBY-5A	28F6893	2
	PBY-5	28F6893	2

REQUIREMENTS PER AIRPLANE

REPLACES
REPLACED BY
CALC WT. .684
ACT. WT.
UNLESS OTHERWISE SPECIFIED DIMENSIONS ARE SUBJECT TO ± 1/32
SCALE 6" = 1'-0"
STAMP PART NUMBER WHERE SHOWN

PART No.	STOCK	MATERIAL	SPEC	LH REQ.	RH REQ.	LH REQ.	RH REQ.	LH REQ.	RH REQ.	LH REQ.	RH REQ.	LH REQ.	RH REQ.
28F6864-7													
28F6864-6													
PARTS LIST PER ASSY.				-0		-2		-3		-4		-5	

5/1

A.C.		WITNESS	CARSON JONES	ERROR	A.K.	JCH
NAVY NONE	NONE	8-10-42	8-19-42 I&N			WOLD
HEAT TREAT	FINISH	DRAFT	CHECK	STRUCT	MAT	ARMSTRONG APPROV. ENG.

NAME MOUNTING ASS'Y - FURNS - COLINEAR ANT. MATCHING STUB
OPP. HAND NONE
CONSOLIDATED AIRCRAFT CORP. SAN DIEGO, CALIF.
DWG. SIZE D
28F6865

8/22

E.O. A654068
MCR 138-(3)
E.O. A94691
MCR 177-H
MCR #390

LET	ALTERATION	DATE	BY
A	REV. REQ. PER AIRPLANE BLK.		
	CREATED -2 ASS'Y W.T. CHG. NEW	11-7-42	ROSS
B	CREATED -3 ASS'Y & REV. REQMTS.		
	AIRP BLK. NO WT. CHG.	12-30-42	GRAHAM
C	ADDED VIEW FOR STENCILING DIRECTIONS.		
	NO WT CHG.	8/6/43	Wright

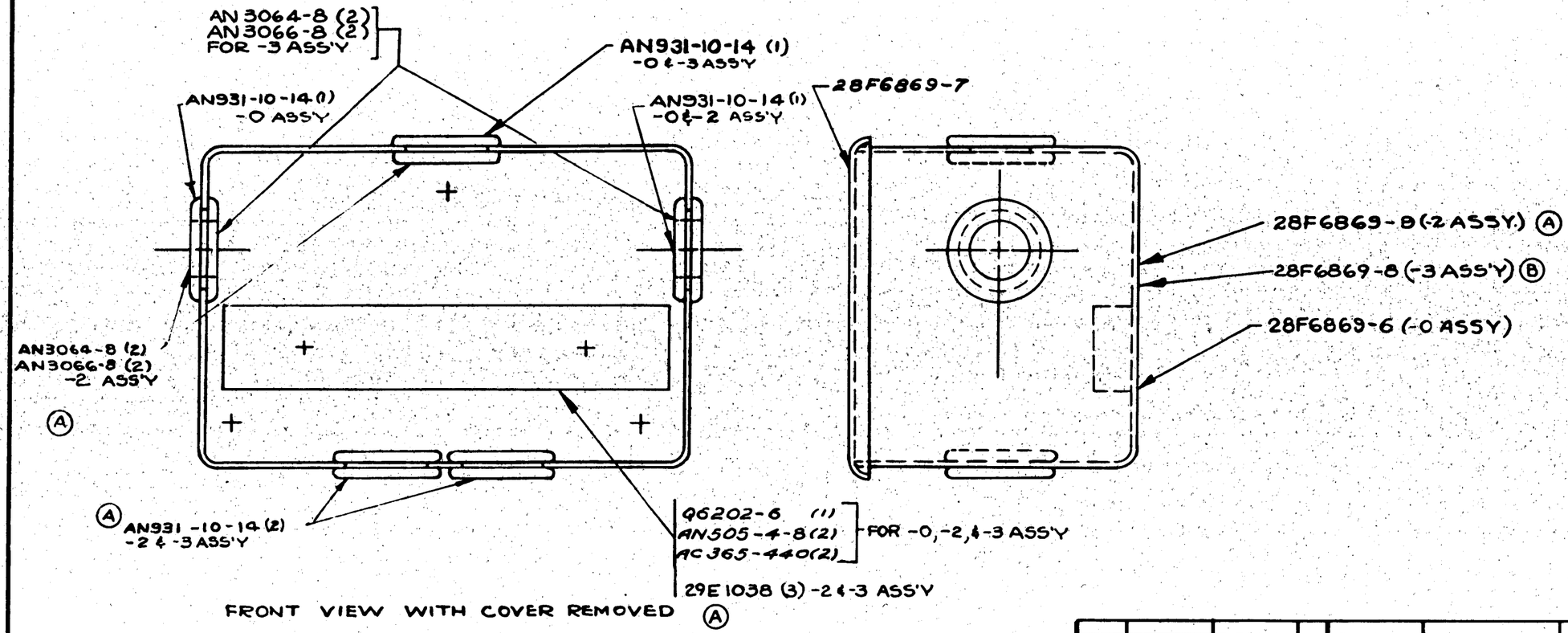

FRONT VIEW WITH COVER REMOVED (A)

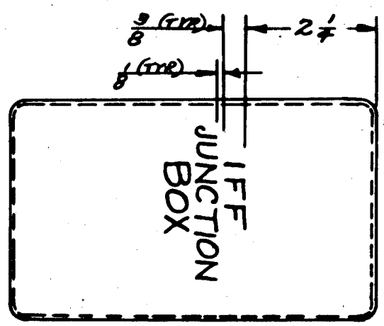

(C) VIEW SHOWING STENCILING IN 3/8" BLACK BLOCK LETTERS ON BOX COVER.
SCALE - 6"=1'0"

(MCR-177-H) C.13595
MCR 138-(3)
C.91876 *301 ON
88476 ONLY
91876
*1 TO 89

				28F6869-8								1									
				29E1038										3		3					
				AN3066-8										2		2					
-3	PBY-5A	28F7511	1	AN3064-8										2		2					
-2	PBY-5	28F6270	1	AN931-10-14								3		3		3					
	PBY-5A	28F6860	1	AN505-4-8								2		2		2					
	PBY-5	28F6860	1	AC365-440								2		2		2					
ASSY. DASH NO.	MODEL	NEXT ASSY.	REQ.																		
REQUIREMENTS PER AIRPLANE				Q6202-6								1		1		1					
				29F6869-9																	
REPLACES		.49 GALS. WT.		28F6869-7								1		1		1					
REPLACED BY		ACT. WT.		28F6869-6								1									
± 1/32	SCALE 12"=1'-0"																				
STAMP PART NUMBER WHERE SHOWN				PART No.	STOCK	MATERIAL	SPEC.	LH REQ.	RH REQ.	LH REQ.	RH REQ.	LH REQ.	RH REQ.	LH REQ.	RH REQ.	LH REQ.	RH REQ.				
				PARTS LIST PER ASSY.				-0		-2		-3		-4		-5					

A.C.		EDWARDS	SIMS	GERBER	HEGLER	GROVER	J.C.H.
NAVY NONE	NONE	8-23-42	8-28-42 H.E.W.			8-31-42	WOLD 8/29
HEAT TREAT	FINISH	DRAFT	CHECK	STRUCT	MAT	APPROV	ENG.

NAME BOX ASS'Y - FURNS - ABD JUNCTION
CONSOLIDATED AIRCRAFT CORP. SAN DIEGO, CALIF.

OPP. HAND NONE
SIZE D
28F6868

R-28F6868

LET	ALTERATION	DATE	BY
A	ADDED -9 PART. WT. CHG. NEG.	10-19-43	SMITH
B	ADDED -8 PART. REVISED REQ. PER AIRPLANE BLOCK. WT. CHG. NEG.	12-31-43	BRINKLEY
C	ADDED 2 9/16 & 3/8 DIMS.		
	ADDED 1/8 DIA. DRAIN HOLE	6-17-43	DAOMM

E.O. A85403
E.O. A94692
MCR 177-H

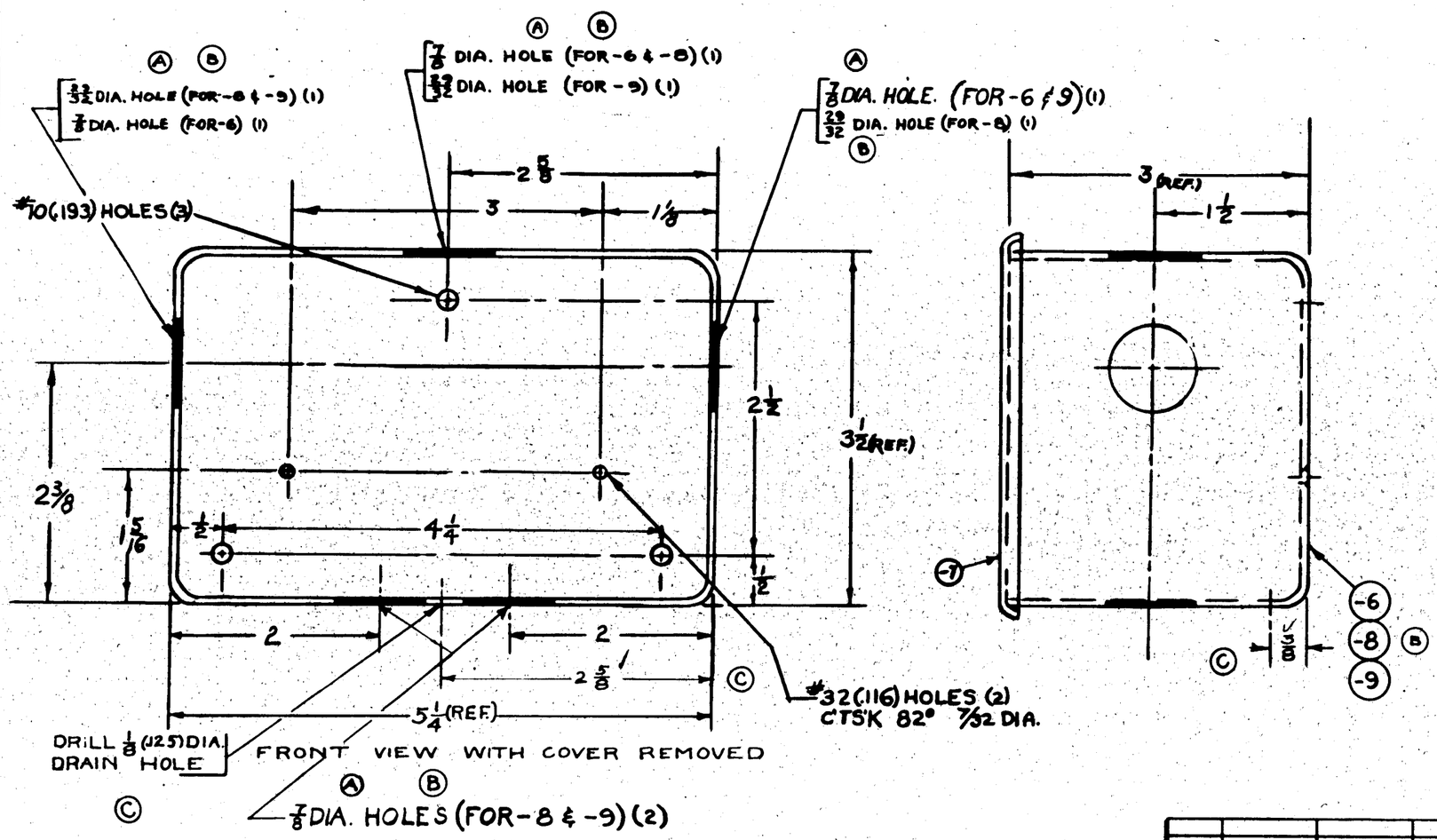

FINISH CODE	
Z	ANODIC TREATMENT
P	P-27 PRIMER
AP	ALUMINIZED PRIMER
C	CADMIUM PLATE

GP- GREEN PRIME

C. NX13585 - NX13585 -
C. 88476 (80 ON)
C. NX13585 -
C. 88476
C81676
C88476 ONLY
C81676 (1-89)

ASSY. DASH NO.	MODEL	NEXT ASSY.	REQ.
-8	PBY-5A	28F6868	1
-9	PBY-5	28F6868	1
-7	PBY-5A	28F6868	1
-7	PBY-5	28F6868	1
-6	PBY-5A	28F6868	1
-6	PBY-5	28F6868	1

REQUIREMENTS PER AIRPLANE

REPLACES — CALC. WT. 36

REPLACED BY — ACT. WT.

SCALE 12"=1'-0"

± 1/32

STAMP PART NUMBER WHERE SHOWN

NOTE:
JUNCTION BOX MAY BE PURCHASED FROM POULSEN & NARDON (P&N #1205-300, 1205-1 OR MONARCH TOOL (M.T. #1022-300, CP1022)

PART NO.	STOCK	MATERIAL	SPEC.	LH REQ.	RH REQ.	LH REQ.	RH REQ.	LH REQ.	RH REQ.	LH REQ.	RH REQ.	LH REQ.	RH REQ.
PARTS LIST PER ASSY.				-0		-2		-3		-4		-5	
-6	BOX	CAC	#BOX 38-300N										
-9	BOX	CAC	#Box 38-300N										
-7	COVER		#										
-8	BOX	CAC	#Box 38-300N										

AC		EDWARDS	SIMS	WEELAN		J.H.
NAVY —	P-GP	8-23-43	8/28 GERBER			WOLD 8/29
HEAT TREAT	FINISH	DRAFT	CHECK	STRUCT	MAT	APPROV	ENG.

OPP. HAND NONE

NAME JUNCTION-BOX-FURNS.-ABD-RADIO

CONSOLIDATED AIRCRAFT CORP. SAN DIEGO, CALIF.

DWG. D SIZE 28F6869

R 9/2/42 6989 J82

E.O. A85229

LET	ALTERATION	DATE	BY
A	ADDED -8 SUB ASSY WT. CHG. NEG.	10-14-42	SMITH
B	TO FACE OF DWG. & W/H ADDED -9 SUB ASS'Y. TO B/M ADDED #P-602 (PLUG) 1 REQ. & #2717-F (CABLE X98) 1 REQ. & ADDED -8 & -9 TO REQ. PER AIRPLANE BLOCK NO.	11-5-42	PARKER
C	E.O. 81223 M.C.R. #212-1 CREATED -10 SUB ASS'Y. IN REQ PER AIRPLANE BLOCK ADDED -10 FOR PBY-5 & 5A 28EK955 (1) & FOR PBY-5A N/A 28F6955 (1) FOR M.C.R. #212-1. RESTRICTED -6 FOR PBY-5 C-91876 UP TO M.C.R. #212-1. CANCELLED -6 FOR PBY-5A, NOS. (5) 164, ALL WT. CHG. NEG.	7/9/43	STEWART
D	C.R. #31918 IN B/M FOR -10 SUB ASS'Y. CHANGED #2717-F CABLE X198 (1) TO #2717-F CABLE X187 (1). WT. CHG. NEG.	9/19/43	Stewart
E	ADDED WTS. OF -8 & -10 SUB ASSYS.	12/18/43	Stewart

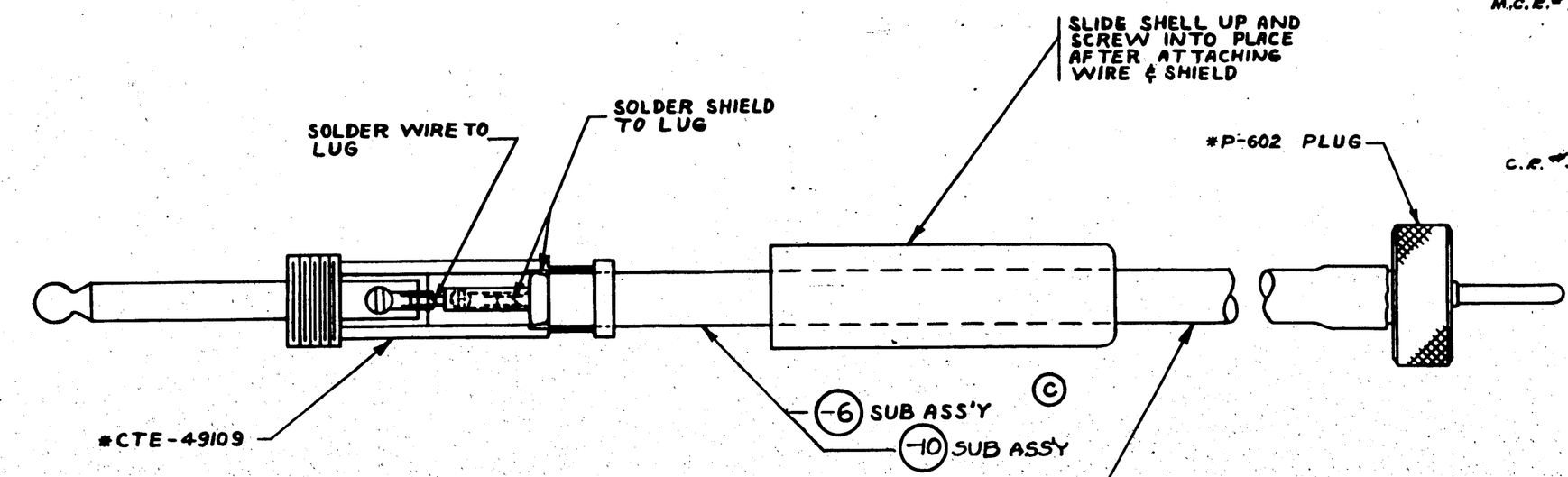

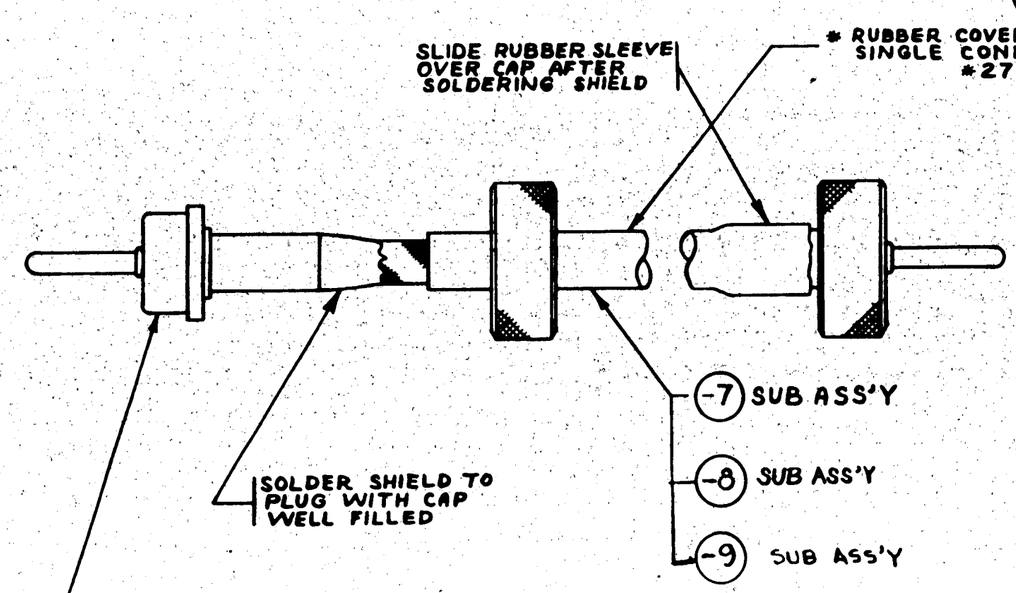

MCR 212-1

-9	PB2Y-3	29U3040	1	CONT. 88476 (53-146)
-7	PBY-5A	28F6979	1	CONT. 91876 (30 ON)
-8	PBY-5	28F6955	1	CONT. 91876 (91 ON)
-10	PBY-5	28F6955	1	CONT. NOS. (5) 164
-10	PBY-5A	N/A 28F6955	1	
-6	PB2Y-3	29U3040	1	CONT. 91876 (30 ON)
-6	PBY-5	28F6955	1	CONT. NOS. (5) 164
-8	PBY-5A	28F6955	1	
-6	PBY-5A	28U5099	1	CONT. 88476 (53-146)

ASSY. DASH NO. | NAME | NEXT ASSY. | REQ.

REQUIREMENTS PER AIRPLANE

REPLACES -9 -.78 lbs. -10 .91 lbs. WT.

REPLACED BY | ASS'Y. WT.

SCALE 24" = 1'-0"

STAMP PART NUMBER WHERE SHOWN

PART No	STOCK	MATERIAL	SPEC.	LH REQ. -0	RH REQ. -2	LH REQ. -3	RH REQ. -4	LH REQ. -5	RH REQ.
CTE49109	PHONE JACK			1					
P-602	PLUG			1					
#2717-F	CABLE X187			1					
-10	SUB ASS'Y								
#P-602	PLUG				1				
#2717-F	CABLE X48				1				
-9	SUB ASS'Y								
#P-602	PLUG			2					
#2717-F	CABLE X116			1					
-8	SUB ASS'Y								
#P-602	PLUG				2				
#2717-F	CABLE X144				1				
-7	SUB ASS'Y								
#CTE49109	PHONE JACK					1			
#P-602	PLUG					1			
#2717-F	CABLE X40					1			
-6	SUB ASS'Y								

PARTS LIST PER ASSY.

* DENOTES GOV'T. FURNISHED EQUIP'T.

AC | NAVY NONE | HEAT TREAT | NONE | FINISH | MATERIAL 8-13-42 | DRAFT

V.E.W. GARCIA | SIMS 8-17 | SERBER | CUSTER | ARMSTRONG | J.C.H. WOLD | CHECK | STRUCT | MAT | APPROV | ENG.

NAME CABLE ASS'Y-FURNS-IMPED. ADAPT. TO RCVR. SW. BOX & IMPED. BOX

OPP. HAND NONE

CONSOLIDATED AIRCRAFT CORP. SAN DIEGO, CALIF.

SIZE D | 28F6872

R 28F6872

LET	ALTERATION	DATE	BY

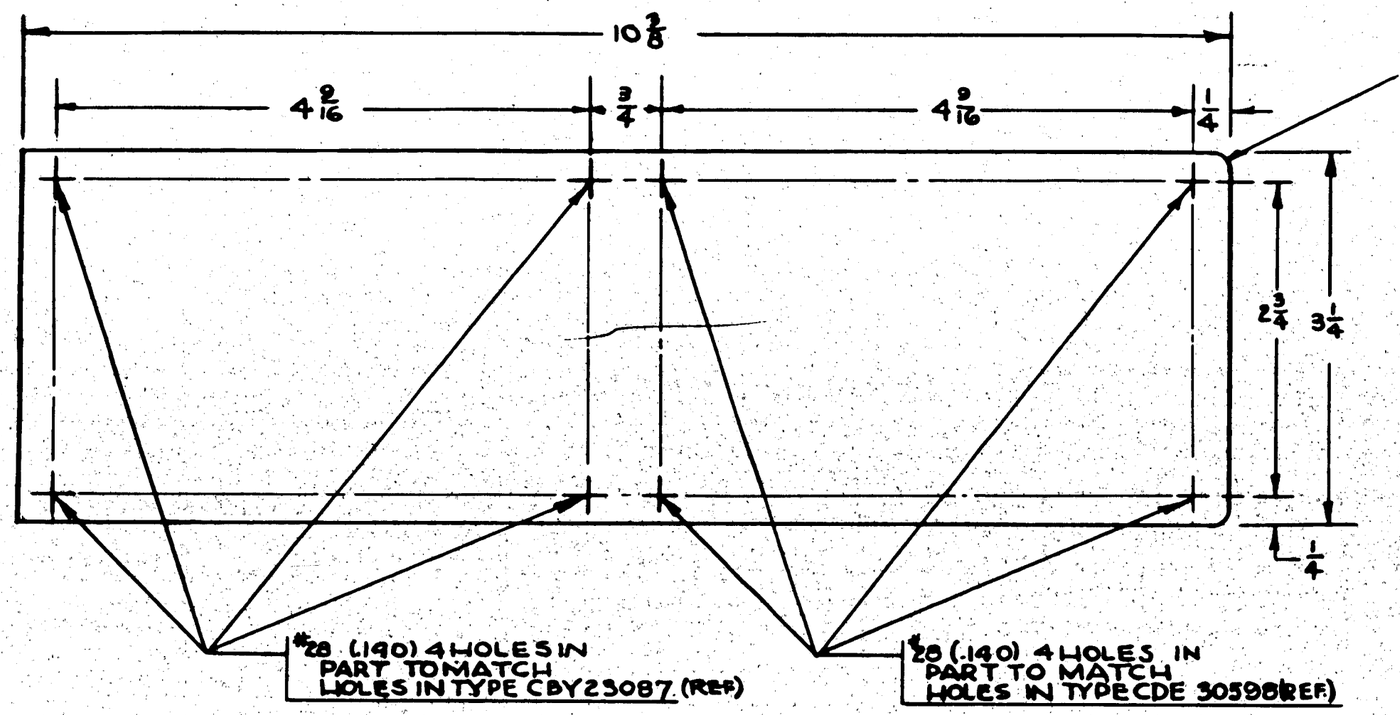

FINISH CODE	
Z	ANODIC TREATMENT
P	A-27 PRIMER
AP	ALUMINIZED PRIMER
C	CADMIUM PLATE

GP GREEN PRIME

C.88476 (103 & ON) →
C.91876 (91 & ON) →

ASSY. DASH NO.	MODEL	NEXT ASSY.	REQ'D
	PBY-5A	28F6199	1
	PBY-5	28F6199	1

REQUIREMENTS PER AIRPLANE

REPLACES — CALC. WT. .16

REPLACED BY — AGT. WT.

UNLESS OTHERWISE SPECIFIED ± 1/32 — SCALE 12-1'-0"

STAMP PART NUMBER WHERE SHOWN

PART No.	STOCK	MATERIAL	SPEC.	LH REQ. -0	RH REQ. -2	LH REQ. -3	RH REQ. -4	LH REQ. -5	RH REQ.
	.051 x 10 1/2 x 3 3/8	ALC 24ST	47A-8 CONDT						

PARTS LIST PER ASSY.

A C		8-19-42	DESIGN VIEW	GERBER	ELDER	GROVER	JCH		
NAVY NONE	Z - P - GP	MOODY	8-22 SIMS			8-28-25	WOLD	8/25	
HEAT TREAT	FINISH	DRAFT	CHECK	STRUCT.	MAT.	APPROV.	ENG.		

NAME MOUNTING PLATE - FURN.
"R.U" SWITCH BOX & "Z-A" IMPEDANCE ADAPTER

OPP. HAND NONE

CONSOLIDATED AIRCRAFT CORP. SAN DIEGO, CALIF.

SIZE D — 28F6889

R

E.O. A94685

E.O. #B 1105

LET	ALTERATION	DATE	BY
A	13 9/16 DIM. WAS 14 & 6 9/16 WAS 6 1/2, CALC. WT. .175 WAS .185.	1-22-43	[illegible]
B	5/8 WAS 1 1/8 & 7 3/16 WAS 6 1/16 NO WT. CHG.	2-18-43	[illegible]

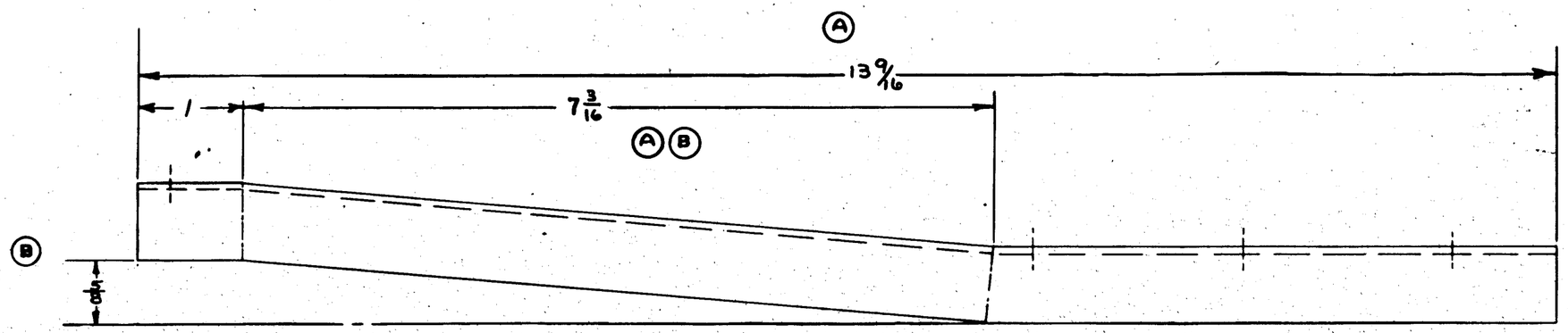

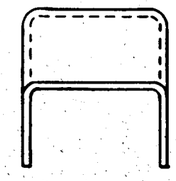

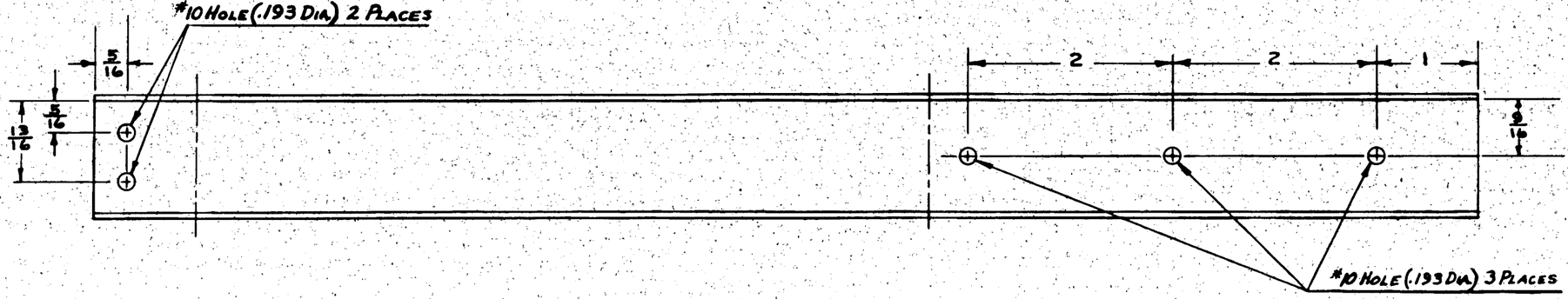

C. 13595
C. 91876 #90 ON

ASSY. DASH NO.	MODEL	NEXT ASSY.	REQ'D.
	PBY-5A	28F6712	1
	PBY-5	28F6712	1

REQUIREMENTS PER AIRPLANE

REPLACES — .175 CALC. WT.

REPLACED BY — ACT. WT.

UNLESS OTHERWISE SPECIFIED ± 1/32 — SCALE 12" = 1'-0"

STAMP PART NUMBER WHERE SHOWN

PART NO.	STOCK	MATERIAL	SPEC.	LH REQ.	RH REQ.	LH REQ.	RH REQ.	LH REQ.	RH REQ.	LH REQ.	RH REQ.	LH REQ.	RH REQ.
	Y10-A58T X 14 1/4			-0		-2		-3		-4		-5	

PARTS LIST PER ASSY.

AC			DRAFT	CHECK	STRUCT	MAT	APPROV	ENG.
NAVY	Z-P-GP		8/22/42					
HEAT TREAT	FINISH							

NAME BRACKET-FURN-DUPLEXING UNIT BASE-BLKH'D. ATTACHING

OPP. HAND

CONSOLIDATED AIRCRAFT CORP. WF SAN DIEGO, CALIF.

DWG. SIZE D — 28F6904

LET	ALTERATION	DATE	BY

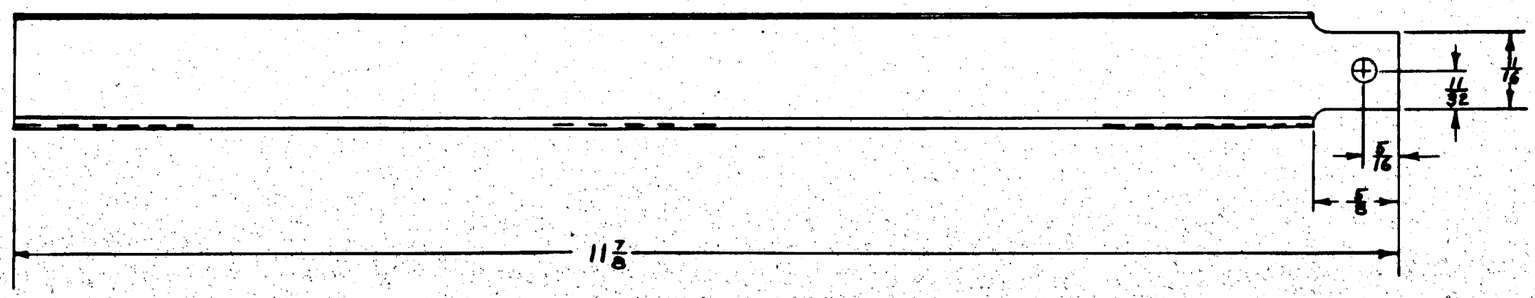

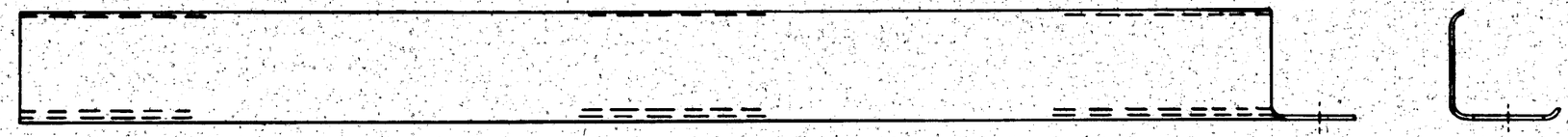

	PBY-5	28F6712	1
ASSY. BASH No.	MODEL	NEXT ASSY.	REQ.

REQUIREMENTS PER AIRPLANE

REPLACES	.089 CALC. WT.
REPLACED BY	ACT. WT.
UNIT OF DIMENSIONS UNLESS OTHERWISE SPECIFIED ± 1/32	SCALE 12"=1'-0"

STAMP PART NUMBER WHERE SHOWN

PART No.	STOCK	MATERIAL	SPEC.	LH REQ. -0	RH REQ. -0	LH REQ. -2	RH REQ. -2	LH REQ. -3	RH REQ. -3	LH REQ. -4	RH REQ. -4	LH REQ. -5	RH REQ. -5
PARTS LIST PER ASSY.		Y3-A43T x12											

A C		ERICKSON					
NAVY	Z-P-GP	9/5/42					
HEAT TREAT	FINISH	DRAFT	CHECK	STRUCT	MAT	APPROV	ENG.

NAME BRACKET-FURN'S-DUPLEXING UNIT-TRANS. BASE ATTACHING

OPP. HAND

CONSOLIDATED AIRCRAFT CORP. VF SAN DIEGO, CALIF.

DWG. SIZE D

28F6905

R

LET	ALTERATION	DATE	BY
A	CREATED -8 & LIMITED -6 & -7 UPTO MCR 272A-1, -8 TO MCR 272-A-1, ADDED TABLE, DIM "E" WAS 18 3/4. WT INCREASE .279		

#10(.193) 3 HOLES
AC366DF-1032(3 REQ)
AN425AD3

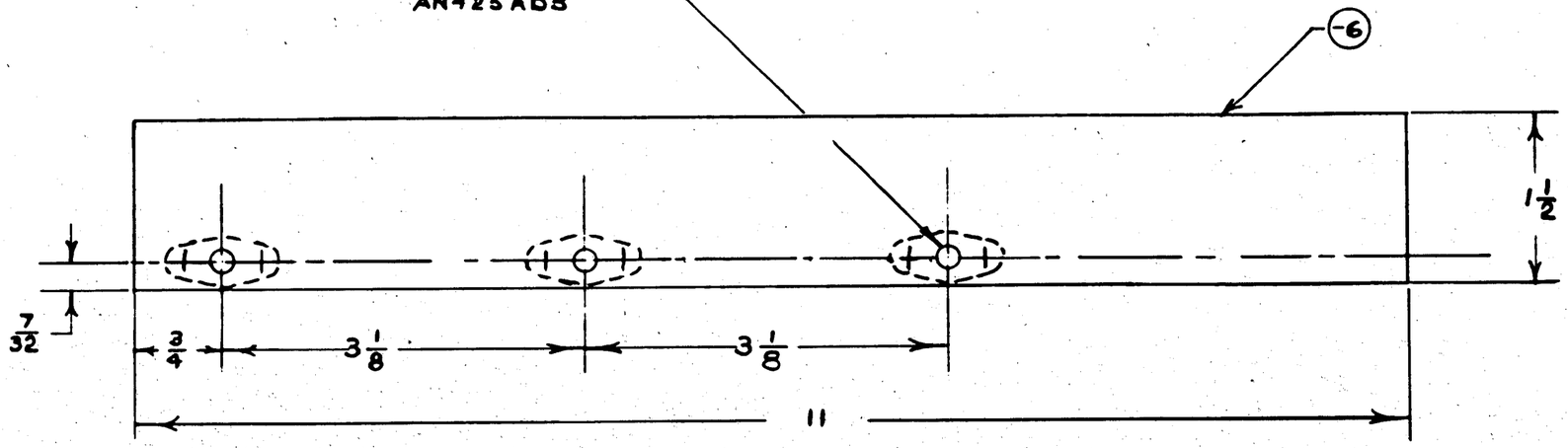

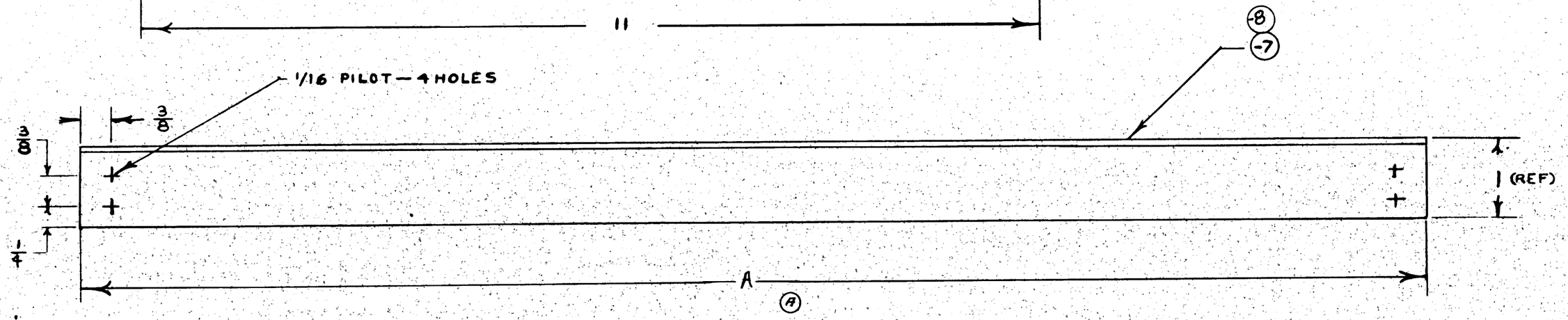

DASH NO	A	CALC WT
-6	—	.11
-7	16 3/4	.258
-8	18 1/8	.279

MCR 272A-1 →
UP TO MCR 272A-1
CONTRACT 91876
#91 & ON

ASSY. DASH NO.	MODEL	NEXT ASSY.	REQ.
-8	PBY-5A	28B5820	1
-7	PBY-5A	28B1095	1
-0	PBY-5A	28B1095	1
-7	PBY-5	28B1095	1
-0	PBY-5	28B1095	1

REQUIREMENTS PER AIRPLANE

REPLACES

NOTED CALC. WT.

REPLACED BY

ACT. WT.

± 1/32

SCALE 12" = 1'0"

STAMP PART NUMBER WHERE SHOWN

AC366DF032
AN425AD3 3

PART NO.	STOCK	MATERIAL	SPEC.	LH REQ.	RH REQ.	LH REQ.	RH REQ.	LH REQ.	RH REQ.	LH REQ.	RH REQ.	LH REQ.	RH REQ.
				-0		-2		-3		-4		-5	
-8	Y5-1122T X10½												
-7	Y5-A32PRT X17												
-6	.064 X 1½ X 11¾	24ST SHT	47A8-T	1									

PARTS LIST PER ASSY.

AC		JOHNSON	KOTTNER				
NAVY —	Z-P-GP	9/8/42	9-17-42				
HEAT TREAT	FINISH	DRAFT	CHECK	STRUCT	MAT	APPROV	ENG.

NAME SUPPORT-FURN.—
BOMBER'S SWITCH PANEL

OPP. HAND

CONSOLIDATED AIRCRAFT CORP. SAN DIEGO, CALIF.

SIZE D

28F6925

R

LET	ALTERATION	DATE	BY

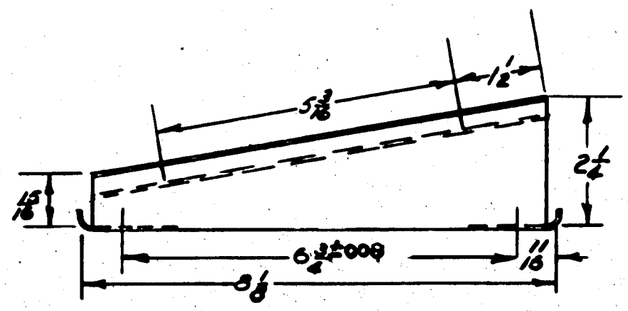

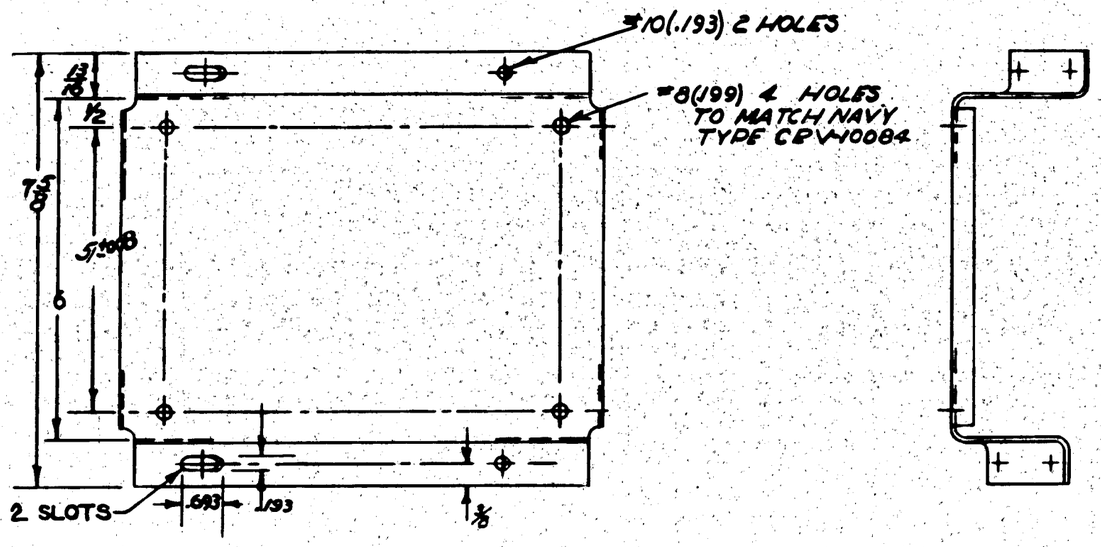

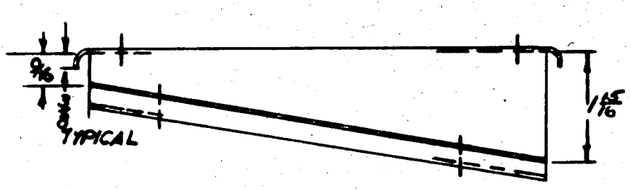

CR*143 MN

ASSY. DASH NO.	MODEL	NEXT ASSY.	SHT.
	PBY-5	28F6927	1

REQUIREMENTS PER AIRPLANE

REPLACES	.69 GALC. WT.
REPLACED BY	ACT. WT.
UNLESS OTHERWISE SPECIFIED ± 1/32 UNLESS NOTED	SCALE 6"=1'-0"

STAMP PART NUMBER WHERE SHOWN

PART No.	STOCK	MATERIAL	SPEC.	LH REQ.	RH REQ.	LH REQ.	RH REQ.	LH REQ.	RH REQ.	LH REQ.	RH REQ.	LH REQ.	RH REQ.
	.064 x 9 x 12 1/8	24ST ALC	47AB-T										
PARTS LIST PER ASSY.				-0		-2		-3		-4		-5	

AC		MATERIAL	9-12-42					
NAVY NONE	2-P-GP	9/16/42	9-12-42					
HEAT TREAT	FINISH	DRAFT	CHECK	STRUCT	MAT	APPROV	ENG.	

NAME BR'KT ~ FURN ~ ATB DYNAMOTOR

OPP. HAND NONE

CONSOLIDATED AIRCRAFT CORP. WF SAN DIEGO, CALIF.

SIZE D

28F6932

R

LET	ALTERATION	DATE	BY
A	IN B/M, FOR -6, REPLACED "K78J X 7⅞, AL. AL. 24ST. 46A9-T" WITH "NOTED 1 FOR -7, REPLACED "K5401 X 5⅜, AL. AL. 24ST. 46A9-T" WITH "NOTED ON FACE FOR -6 REMOVED "K78J" & FOR -7 REVISED "K5401." ADDED MAT'L. NOTES #1 & #2.		
	WT. CHG. NEG.	8-9-43	P.L.N. #2

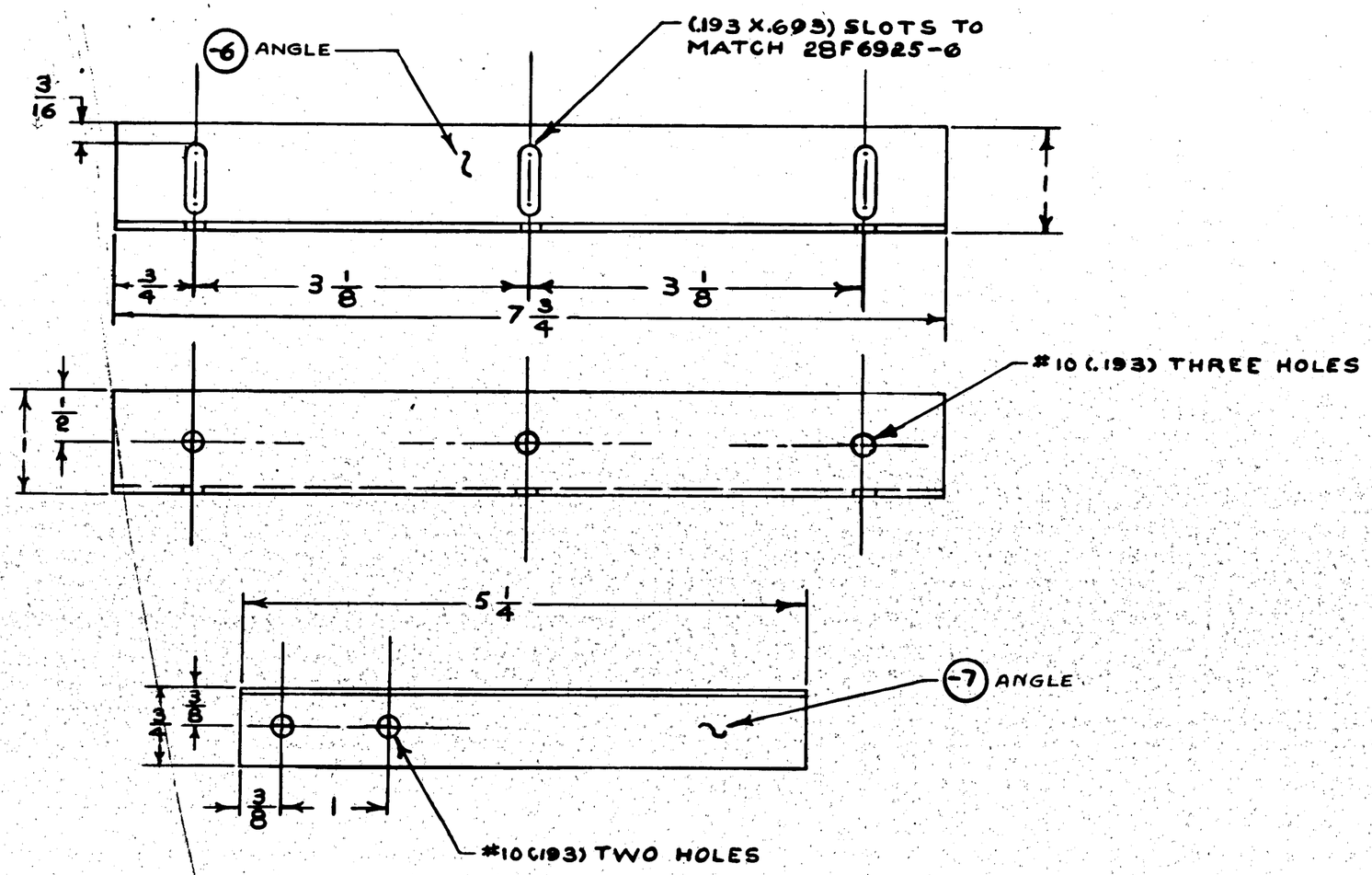

MATERIAL NOTES-

1.-MAT'L. FOR -6 MAY BE-
(A) Y-2-A46T X 7⅞, OR
(B) K78J X 7⅞, AL. AL. EXTR., SPEC. QQ-A-354-T.

2.-MAT'L. FOR -7 MAY BE-
(A) Y-2-A28T X 5⅜, OR
(B) K5401 X 5⅜, AL. AL. EXTR., SPEC. QQ-A-354-T.

C. 13595
CONTRACT 91876 #91 ON

ASSY. BASH No.	MODEL	NEXT ASSY.	REQ'D
-0	PBY-5A	28F1005	1
-0	PBY-5	28F1005	1

REQUIREMENTS PER AIRPLANE

REPLACES
REPLACED BY
.15 CALC. WT.
ASY. WT.

LIMIT ON DECIMALS UNLESS OTHERWISE SPECIFIED ± 1/32
SCALE 12" = 1' 0"
STAMP PART NUMBER WHERE SHOWN

PART No.	STOCK	MATERIAL	SPEC.	LH REQ. -0	RH REQ. -0	LH REQ. -2	RH REQ. -2	LH REQ. -3	RH REQ. -3	LH REQ. -4	RH REQ. -4	LH REQ. -5	RH REQ. -5
-7	NOTED	NOTED	NOTED	1									
-6	NOTED	NOTED	NOTED		1								

PARTS LIST PER ASSY.

AC		JOHNSON						
NAVY	Z-P-6P	9/11/42	KATHEW					
HEAT TREAT	FINISH	DRAFT	CHECK	STRUCT	MAT	APPROV	ENG.	

NAME SUPPORT—FURN.—BOMBER'S SW. PANEL
CONSOLIDATED AIRCRAFT CORP. NF SAN DIEGO, CALIF.

OPP. HAND
DWG. SIZE D
28F6935

R 9-28-42

28F6935

LET	ALTERATION	DATE	BY
A	ON FACE OF DWG. DIM 2¼ MOVED TO CORRECT LOCATION TO END OF PIECE; WAS ¾" FROM END. IN BIM CHG'D VINOLITE SLEEVING SL 6 X I (A) TO VINOLITE SLEEVING SL6XI(B) (NO WT CHG)	5-6-43	I FRASER
C.R.22146			
B	ADDED RELEASES FOR PBY-5A, NOS) 464. NO WT. CHG.	5-6-43	I. FRASER

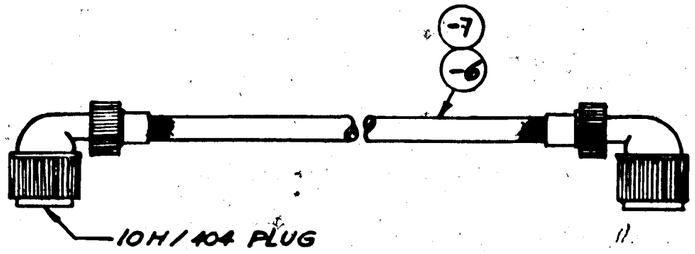

CABLE ASSEMBLY -0 & -2

-2 WT. 1.35 LBS.
-0 WT. .60 LB.

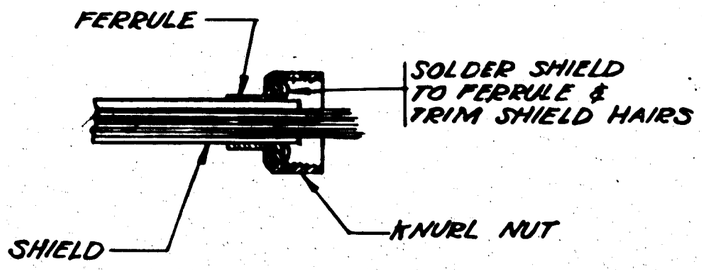

DETAIL OF ATTACHMENT OF CABLE SHIELD TO FERRULE

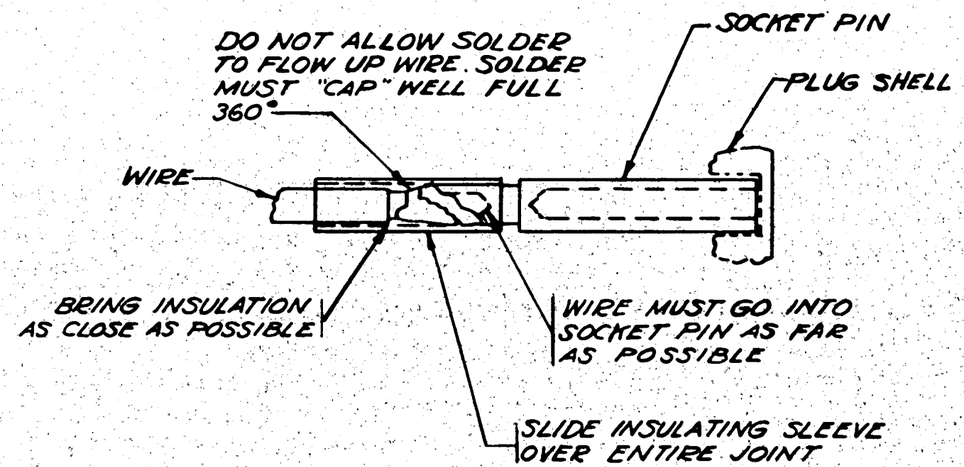

METHOD OF SOLDERING WIRE TO PIN

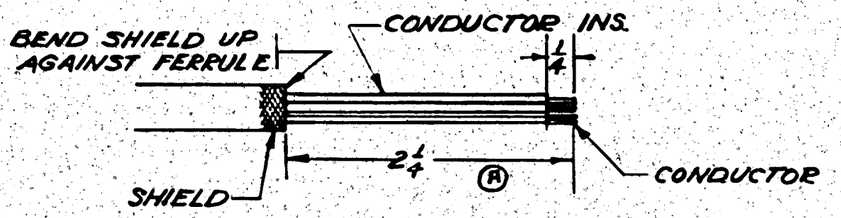

DETAIL OF CABLE END ATTACHING TO PLUG

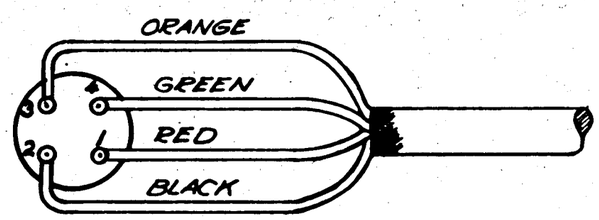

TYPICAL CONNECTION DETAIL OF CABLE TO PLUG

NOTES:
WIRES MUST BE CAREFULLY PROTECTED FROM SHIELDING STRANDS TO PREVENT SHORTS.
1. CONTRACTOR INSTALLED ON CONTRACT 91876 (90 & ON)

TYPE & SIZE OF LUGS TO BE DETERMINED ON FIRST INST.

NOS) 464 { -2 PBY-5A 28F6935 / -0 PBY-5A 28F6935 /
91876 (90 & ON) { -2 PBY-5 28F6955 / -0 PBY-5 28F6955 /

* GOV'T FURN. EQUIP.

ASSY. DASH NO.	MODEL	NEXT ASSY.	REQ.
REQUIREMENTS PER AIRPLANE			
REPLACES		NOTED CALC. WT.	
REPLACED BY		ASY. WT.	

LIST OF ENGINEERING UNLESS OTHERWISE SPECIFIED: ± 1/32 — SCALE —
STAMP PART NUMBER WHERE SHOWN

PART No.	STOCK	MATERIAL	SPEC.	LH REQ.	RH REQ.	LH REQ.	RH REQ.	LH REQ.	RH REQ.	LH REQ.	RH REQ.	LH REQ.	RH REQ.
PARTS LIST PER ASSY.				-0	-2	-3	-4	-5					
VINOLITE SLEEVING SL-6 x 1"				B	B								
* 10H/404 PLUG				B	2								
* -7	DET.-2 CABLE x 7'2"			1									
* -6	DET.-2 CABLE x 34"			1									

A.C.		9-14-42	USD	
NAVY		Revisions		
HEAT TREAT	FINISH	DRAFT	CHECK	STRUCT	MAT	APPROV	ENG.

NAME CABLE FURN. — ASV POWER DIST. UNIT TO RECEIVER
OPP. HAND
CONSOLIDATED AIRCRAFT CORP. SAN DIEGO, CALIF.
SIZE D
28F6939

R

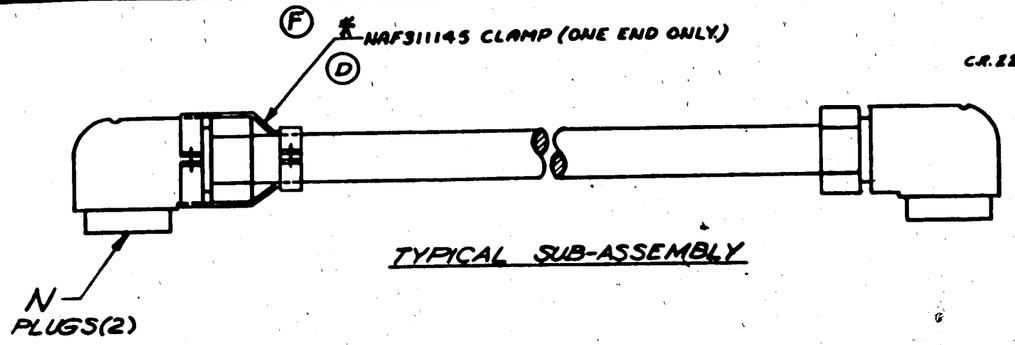

TYPICAL SUB-ASSEMBLY

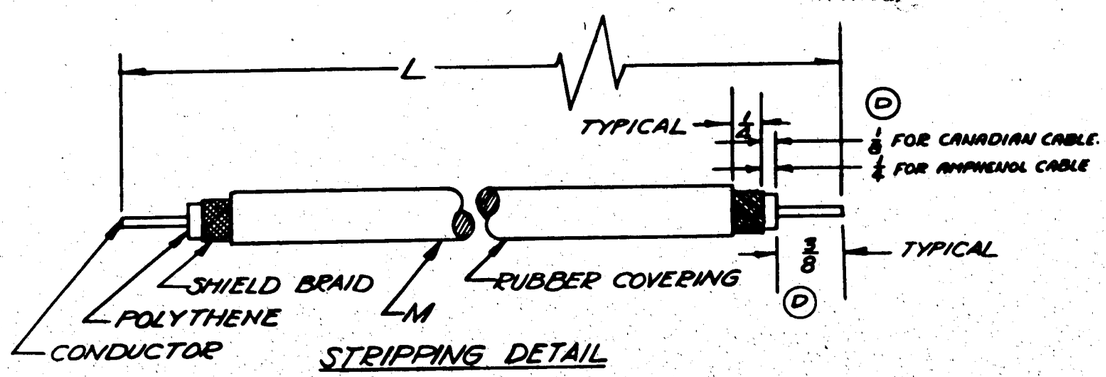

STRIPPING DETAIL

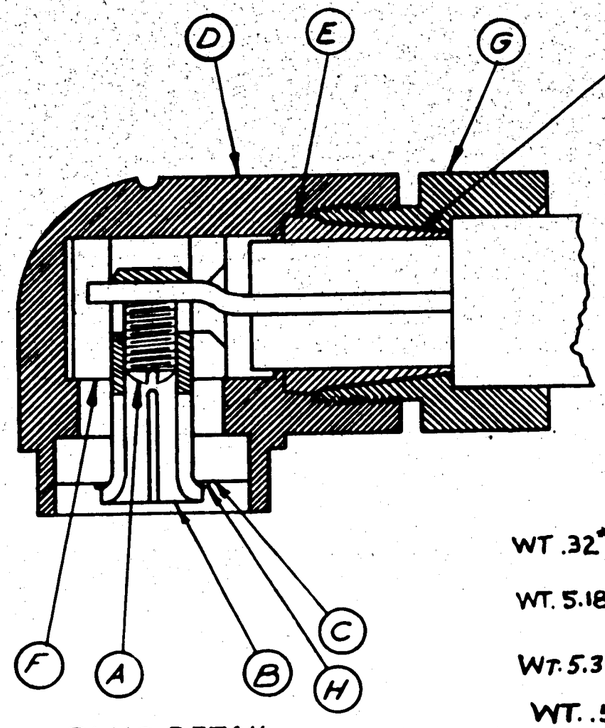

PLUG DETAIL
(SEE NOTES)

LET	ALTERATION	DATE	BY
D	CHGD DIM. 5/64 TO 3/16 ABOVE TAB. CHG. TAB 1/8 DIA. (ABOVE 1/8 DIA. FOR AMPHENOL CABLE) ADDED ARROWS TO -6, 7, 8, 9, 10 SUB ASSYS. WEEN MFG.	5-5-43	
E	ADDED NOTE 8 TO PIECE OF DWG. WEEN MFG.	5-14-43	
F	ADDED ASTERISK (*) TO WHERE WAS CLAMP. NO WT. CHG.	5-27-43	
G	FOR -9 (1) REQ'D WAS (2) REQ'D. NEXT ASSEM. FOR -9, 28F6955 WAS 28F6995, NO WT. CHG.	7-14-43	
H	CREATED -11 & -12 SUB ASS'Y'S. IN REQ. BLOCK -11 FOR PBY-5A W/A 28F6955(2) WAS -6; -12 FOR PBY-5A W/A 28F6955(1) WAS -9. ADDED WT OF -11 & -12. WT. -11 = .35# & WT. -12 = .96#	7-15-43	

E.O.A.8057

E.O.A 91440
MCR.191-2

LET	ALTERATION	DATE	BY
A	REMOVED NOTE 8 "LENGTH OF -8 TO BE DETERMINED ON FIRST INST." & ASTERISK(S) NOTATION FOR 10H/701 IN -7 & 8 SUB ASS'Y & IN -8 SUB ASS'Y 43'-0" WAS NOTED IN -6 SUB ASS'Y.		
	10H/701 (1) WAS (2) (ADDED 10H/701 (1) NO WT. CHG.	12-31-42	ROSS
B	CREATED -9 SUB ASS'Y & REV. REQ. PER AIRPLANE BLK. WT. -9 = .5	12-31-42	ROSS
C	CREATED -10 SUB ASS'Y. IN REQ. PER AIRPLANE BLOCK REPLACED -8 FOR PBY-5 (PBY-5A W/A 28F6991, WITH -10. ADDED WT. FOR -8. WT. -10 = 5.40	3-6-43	APPROVED

NOTES:

1. (1) LENGTH "L" OF CABLE WILL BE APPROXIMATE. EXACT LENGTHS FOR EACH "BATCH" OF CABLE WILL BE DETERMINED BY TEST & SUPPLIED TO SHOP BY RADAR TEST GROUP.
   (2) SINCE THE POLYTHENE INSULATION OF THE CABLE MELTS AT 80° C. TINNING MUST BE DONE QUICKLY WITH A CLEAN HOT IRON TO PREVENT SPOILING THE CABLE.
   (3) CABLE CANNOT BE BENT IN LESS THAN A 10" RADIUS DUE TO "COLD-FLOW" PROPERTIES OF POLYTHENE UNDER COMPRESSION.
   (4) NOTE: IF CABLE INSULATION IS DAMAGED BY HEAT, IF CABLE IS SQUEEZED WITH PLIERS OR VISE, OR IF WIRE IS CUT TOO SHORT, THE CABLE MUST BE REPLACED.
2. PREPARATION OF CABLE:
   CUT CABLE INTO LENGTHS 1/2" LONGER THAN REQUIRED. THE PREPARED LENGTH SHOULD BE AT LEAST 3/8" LONGER THAN THE DISTANCE BETWEEN PLUG CENTERS. THE CABLE SHOULD LIE FLAT FOR 24 HOURS BEFORE ASSEMBLY TO ALLOW THE INSULATION TO CONTRACT, SINCE THIS WILL HAVE STRETCHED SLIGHTLY DUE TO COILING. SEAL CUT ENDS WITH LIQUID POLYSTYRENE TO PREVENT MOISTURE ENTRANCE & WRAP WITH TAPE FOR MECHANICAL PROTECTION UNTIL READY FOR USE. CAUTION—CABLE MUST BE HANDLED WITH GREAT CARE; SQUEEZING CABLE IN VISE WILL DESTROY ELECTRICAL PROPERTIES.
3. ASSEMBLY OF SOCKET ON CABLE:
   (1) REMOVE THE PROTECTIVE COVERING OVER THE SHIELD BRAID FOR A DISTANCE OF 15/16" FROM THE CABLE END AND PUSH THE CLAMPING SCREW (G) OVER THE END OF THE CABLE SO THE SHOULDER IS FIRMLY SEATED AGAINST THE RUBBER COVERING. IT MUST BE KEPT IN POSITION THROUGHOUT THE ASSEMBLY.
   (2) UNWEAVE THE PROTRUDING SHIELD BRAID WITH A BLUNT INSTRUMENT AND SPLAY EVENLY BEFORE PASSING THE SLEEVE (E) UNDER THE BRAID INTO THE CLAMPING SCREW (G). PRESS THE SLEEVE INTO THE CLAMPING SCREW AS HARD AS POSSIBLE BY HAND. TRIM OFF THE PROTRUDING STRANDS OF BRAID AS CLOSE TO THE CLAMPING SCREW AS POSSIBLE.
   (3) THE INSULATION SHOULD NOT PROTRUDE MORE THAN 1/8" FROM THE SLEEVE & THE BARE CONDUCTOR SHOULD PROTRUDE 9/16".
   (4) TWIST THE STRANDED CONDUCTOR TIGHTLY WITH FLAT-NOSE PLIERS & LIGHTLY TIN.
   (5) FIT THE MOLDED SPACER (F) IN THE SOCKET BODY (D) SO THAT THE SMALL HOLE IS OPEN TO THE CABLE ENTRANCE AND THE LARGE HOLE POSITIONED TO RECEIVE THE SOCKET (B).
   (6) PLACE THE SPRING RING (H) AND THE MOLDED WASHER (C) IN TURN OVER THE SOCKET (B), BEFORE FITTING IT INTO THE MOLDED SPACER (F) ALREADY IN POSITION IN THE PLUG SHELL (D).
   (7) TIGHTEN PLUG SHELL (D) ONTO CLAMPING SCREW (G) AND TAKE-UP ON LOCK-SCREW (A) UNTIL CABLE CONDUCTOR IS FIRMLY CLAMPED, NOT SMASHED.
   (8) CANIADIAN CABLE-INTERCHANGEABLE WITH AMERICAN MANUFACTURED CABLE. CONSULT DWG. FOR STRIPPING DETAILS.

* ALL EQUIP'T GOVERN. FURN'D 91876 (90¢ ON)

SUB-ASSY	L	M	N
WT .32# -6	17 1/2"	-20	10H/701
WT. 5.18# -7	42'-0"	-21	10H/701
WT. 5.30# -8	43'-0"	-22	10H/701
WT. .5# -9	6'-8	-23	10H/701
WT. 5.40# -10	44'-0"	-24	10H/701
WT. .35# -11	22 1/2"	-25	10H/701
(H) WT. .96# -12	84"	-26	10H/701

XC. 91876 # 90 & ON
+C. 91876 # 90 TO 345
ΔC. NO. CT464 UP TO ACA 270
Φ C. 91876 (346 & ON)

ASSY. SUB-ASSY. SUB	MODEL	NEXT ASSY.	REQ.
-7	PBY5A	28F6955	2
-11	PBY5A	28F6955	2
-12	PBY-5A	28F6955	1
-9	PBY-5	28F6955	1
-10	PBY-5A	28F6991	2
-10	PBY-5	28F6991	2
-8	PBY-5	28F7320	2
-7	PBY-5	28F6955	2
-6	PBY-5	28F6955	2

REQUIREMENTS PER AIRPLANE

REPLACES	NOTED GALS. WT.
REPLACED BY	ASY. WT.
LIMIT OF DIMENSIONS UNLESS OTHERWISE SPECIFIED	SCALE
± .Y32	

STAMP PART NUMBER WHERE SHOWN

PART NO.	STOCK	MATERIAL	SPEC.	LH REQ.	RH REQ.	LH REQ.	RH REQ.	LH REQ.	RH REQ.	LH REQ.	RH REQ.	LH REQ.	RH REQ.
PARTS LIST PER ASSY.				-0	-3	-3	-4	-5					
	(H) NAF311145	(CLAMP) 10-H-1774		1									
	*10H/701	COAXIAL PLUG	SINGLE	2									
	-26	PT-5 COAXIAL	CABLE X 84	1									
	-12	SUB ASSEMBLY											
	(H) NAF311145	(CLAMP) 10-H-1774		1									
	*10H/701	COAXIAL PLUG	SINGLE	2									
	* -25	PT-5 COAXIAL	CABLE X 22½	1									
	(F) -11	SUB ASSEMBLY											
	*NAF311145	(CLAMP) 10-H-1774		1									
	10H/701	COAXIAL PLUG	(SINGLE)	2									
	* -24	PT-5 COAXIAL CABLE	X 44'-0"	1									
	-10	SUB ASSEMBLY											
	*NAF311145	(CLAMP) 10-H-1774		1									
	*10H/701	COAXIAL PLUG	(SINGLE)	2									
	* -23	PT-5 COAXIAL CABLE	X 6'8"	1									
	-9	SUB ASSEMBLY											
	10H/701	COAXIAL PLUG	(SINGLE)	2									
	* -22	PT-5 COAXIAL CABLE	X 43'-0"	1									
	-8	SUB ASSEMBLY											
	*NAF311145	(CLAMP) 10-H-1774		1									
	10H/701	COAXIAL PLUG	(SINGLE)	2									
	* -21	PT-5 COAXIAL CABLE	X 42'-0"	1									
	-7	SUB-ASSEMBLY											
	*NAF311145	(CLAMP) 10-H-1774		1									
	10H/701	COAXIAL PLUG	(SINGLE)	1									
	*10H/701	COAXIAL PLUG	(SINGLE)	1									
	* -20	PT-5 COAXIAL CABLE	X 17½"	1									
	-6	SUB-ASSEMBLY											

A.C.		9-15-42	DRAWN	CHECK	STRUCT	MATL	APPROV	ENG.
NAVY		9-29-42						
HEAT TREAT	FINISH	DRAFT						

NAME CABLES-FURN-PT-5 COAXIAL TRANSMISSION LINES

CONSOLIDATED AIRCRAFT CORP. WF San Diego, Calif.

OPP. HAND NONE

SIZE D — 28F6940

28F6940 R

E.O. A61220

LET	ALTERATION	DATE	BY
A	IN DETAIL-6L 2 5/8 DIM. WAS 3 5/8 NO WT. CHG.	10-31-42	ROSS
B	IN B/M FOR -6 1/2 REPLACED "EXTR. K14040 x 8 1/2, AL. AL., 46A3T" WITH "Y-36-ATRT x 8 1/2." (WT. CHG. NEG.)	1-27-43	KNIGHT

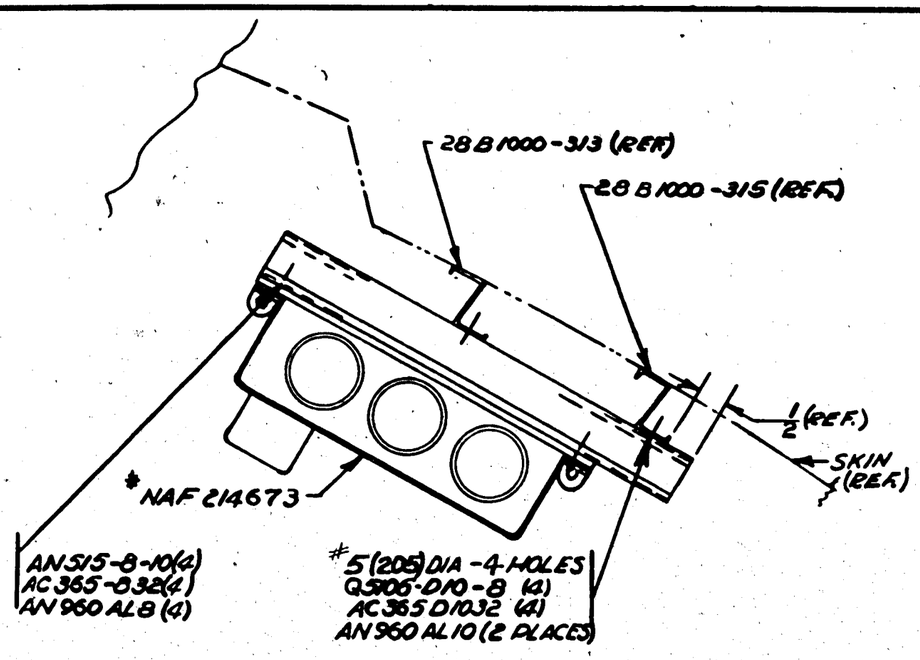

VIEW FWD
OUTBD →

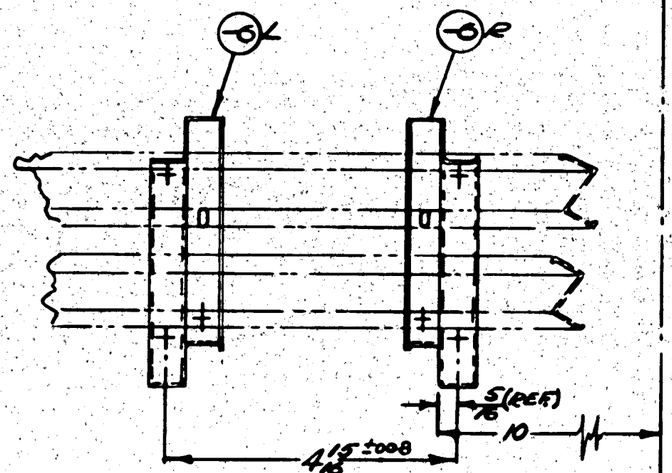

BKD 3.0

VIEW OUTBD
← FWD EQUIPT REMOVED

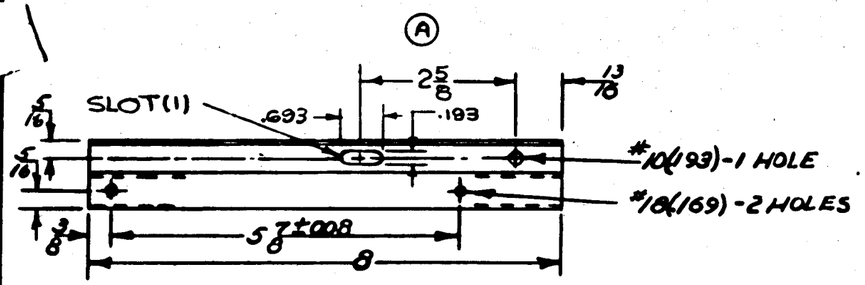

DETAIL -6L

C. 13595
C. 91876 & 90600N

NOTE
(*) = G.F.E.
FINISH (Z-P-GP) -6L & -6R

ASSY. SALES NO.	MODEL	NEXT ASSY.	REQ.
	PBY-5A	28F6002	1
	PBY-5	28F1002	1

REQUIREMENTS PER AIRPLANE

REPLACES
REPLACED BY
CALC. WT. 2.31
ACT. WT.

UNLESS OTHERWISE SPECIFIED DIMENSIONS ARE IN INCHES
± 1/32 IF NOTED
SCALE 6" = 1'-0"
STAMP PART NUMBER WHERE SHOWN

PART No.	STOCK	MATERIAL	SPEC.	LH REQ. -0	RH REQ. -0	LH REQ. -2	RH REQ. -2	LH REQ. -3	RH REQ. -3	LH REQ. -4	RH REQ. -4	LH REQ. -5	RH REQ. -5
	NAF 214673 (*)			1									
	QS506D10-8				4								
	AC365-832												
	AC365D1032												
	AN960AL10												
	AN960AL8												
	AN515-8-10												
-6R	Y-36-ATRT x 8 1/2		4		1								
-6L	Y-36-ATRT x 8 1/2			1									

PARTS LIST PER ASSY.

AC		Material	Gauge (Ref.)				
NAVY NONE	NOTED	9/7/42	Mfg. Engr. 9-17-42			4214	
HEAT TREAT	FINISH	DRAFT	CHECK	STRUCT	MAT	APPROV	ENG.

NAME INSTALL.~ FUENS~ ZA JUNCTION BOX & BRKTS
OPP. HAND NONE
SIZE D
28F6946
CONSOLIDATED AIRCRAFT CORP. Ltd. SAN DIEGO, CALIF.

R

LET	ALTERATION	DATE	BY

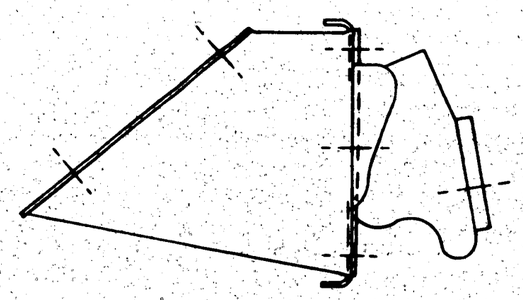

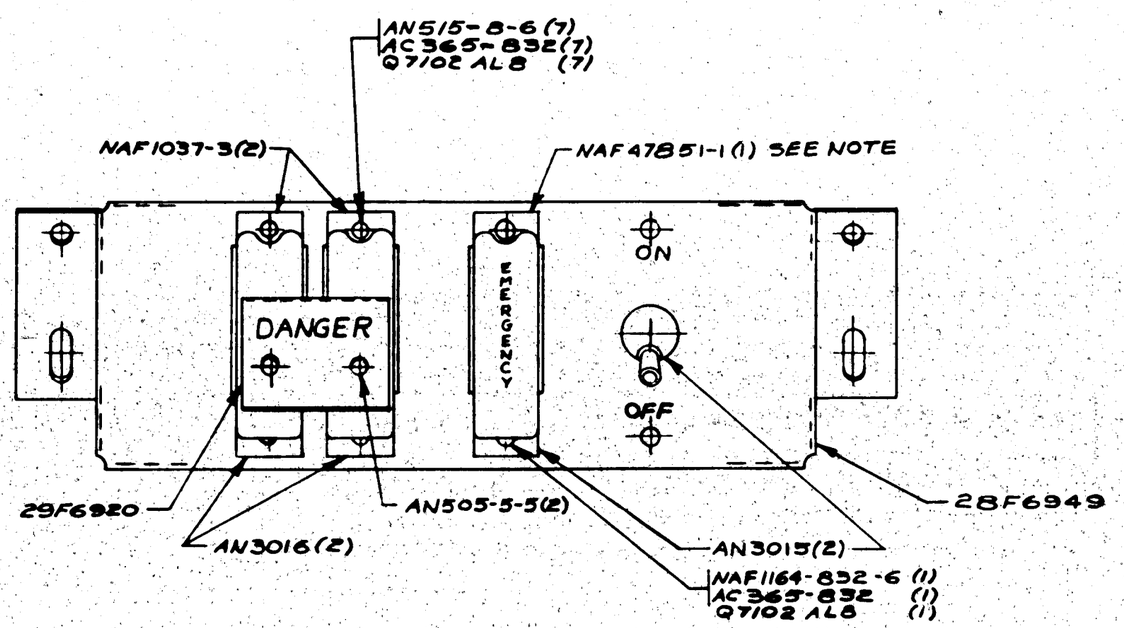

NOTE

1. ON INSTALLATION SEAL GUARD TO SCREW WITH LINEN THREAD.
2. BUS TWO AN3015 SWITCHES TOGETHER USING 29F6919-7 & TWO AN3010 SWITCHES USING 29F6919-6

PART No.	STOCK	MATERIAL	SPEC.	LH REQ. -0	RH REQ. -0	LH REQ. -2	RH REQ. -2	LH REQ. -3	RH REQ. -3	LH REQ. -4	RH REQ. -4	LH REQ. -5	RH REQ. -5
NAF1164-832-6				1		1							
NAF47851-1				1									
NAF1037-3				2		2							
AN3016				2		2							
AN3015								2		2			
AN515-8-6				7		7		7		7		7	
AN505-5-5				2		2		2		2		2	
Q7102 AL8				8		8		8		8		8	
AC365-832				8		8		8		8		8	
29F6920				1									
29F6919-7						1							
29F6919-6								1		1			
28F6949				1									

PARTS LIST PER ASSY.

ASSY. DASH NO.	MODEL	NEXT ASSY.	REQD.
	PBY-5	28F6947	1

REQUIREMENTS PER AIRPLANE

REPLACES — .61 GALS. WT.

REPLACED BY — ADV. WT.

UNLESS OTHERWISE SPECIFIED ON ENGINEERING DRAWINGS: ± 1/32 — SCALE 12"=1'0"

STAMP PART NUMBER WHERE SHOWN

AC

NAVY NONE — NONE

HEAT TREAT — FINISH

DRAFT: 9-16-42 — CHECK — STRUCT — MAT — APPROV — ENG.

NAME ASS'Y-FURNS-PILOTS IFF CONTROL SWITCH & BR'KT

CONSOLIDATED AIRCRAFT CORP. SAN DIEGO, CALIF.

OPP. HAND

DWG. SIZE D — 28F6948

R

LET	ALTERATION	DATE	BY

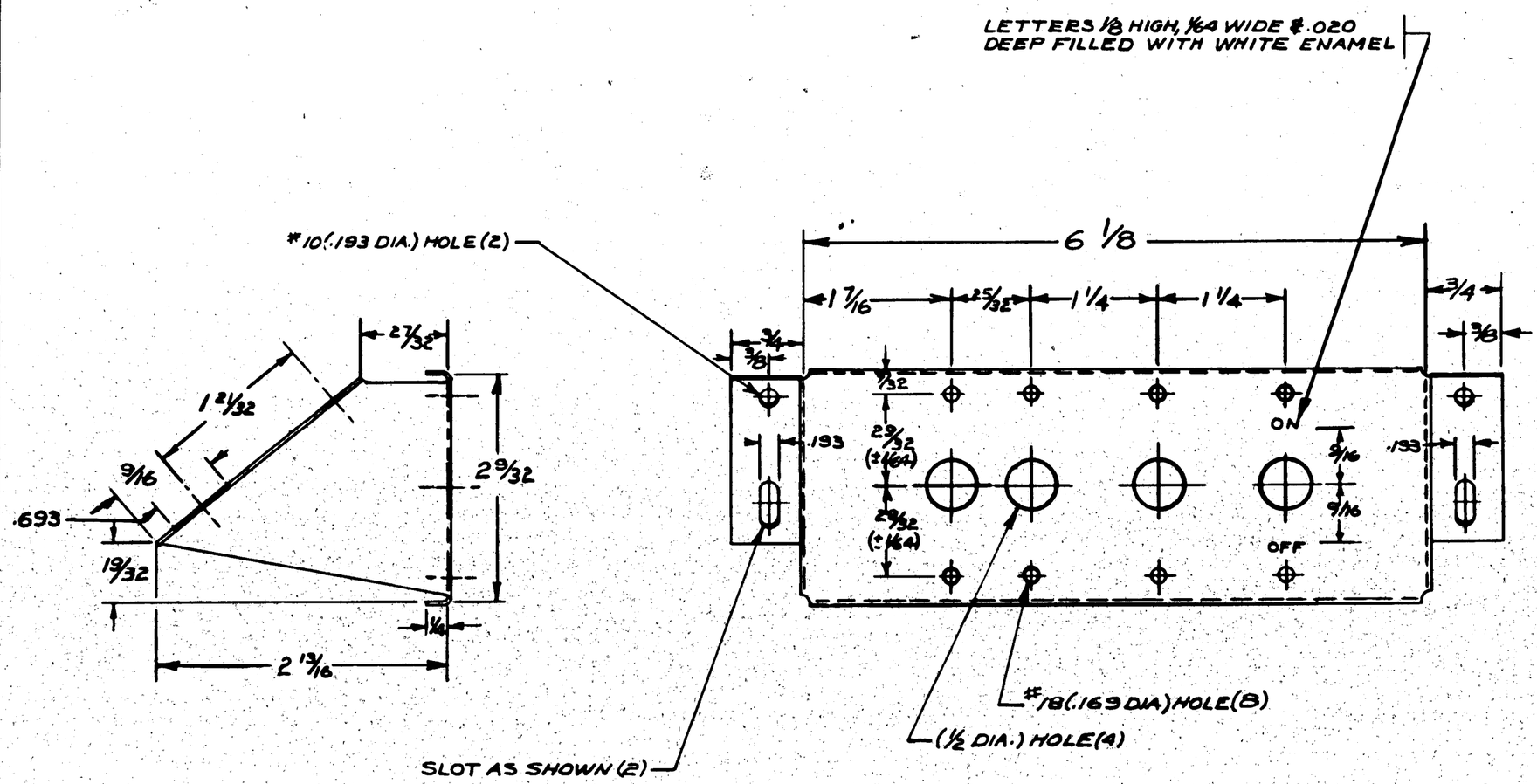

ASSY. DASH NO.	MODEL	NEXT ASSY.
	PBY-5	28F6948

REQUIREMENTS PER AIRPLANE

REPLACES	.16 CALC. WT.
REPLACED BY	AGT. WT.
UNLESS OTHERWISE SPECIFIED ± 1/32	SCALE 12" = 1'0"

STAMP PART NUMBER WHERE SHOWN

PART No.	STOCK	MATERIAL	SPEC.	LH REQ.	RH REQ.	LH REQ.	RH REQ.	LH REQ.	RH REQ.	LH REQ.	RH REQ.	LH REQ.	RH REQ.
	.040x9/16x3	24ST-ALC	4718-T										
PARTS LIST PER ASSY.				-0		-2		-3		-4		-5	

A C			9-16-42	9-16-42					
NAVY NONE	Z-P-GP								
HEAT TREAT	FINISH	DRAFT	CHECK	STRUCT	WT	APPROV	ENG.		

NAME BRACKET-FURNS-PILOTS IFF CONTROL SWITCH

OPP. HAND

CONSOLIDATED AIRCRAFT CORP. San Diego, Calif.

SIZE D

28F6949

R

E.O.A95216
E.O.B0286

LET	ALTERATION	DATE	BY
A	-6 WIRE NO. 981 WAS 731 NO WT. CHANGE	2-3-43	DECAULT
B	-7 & -8 #16 GA. ELEC. WIRE WAS #12 GA. ELEC. WIRE. WT. CH. NEG.	2-3-43	DECAULT

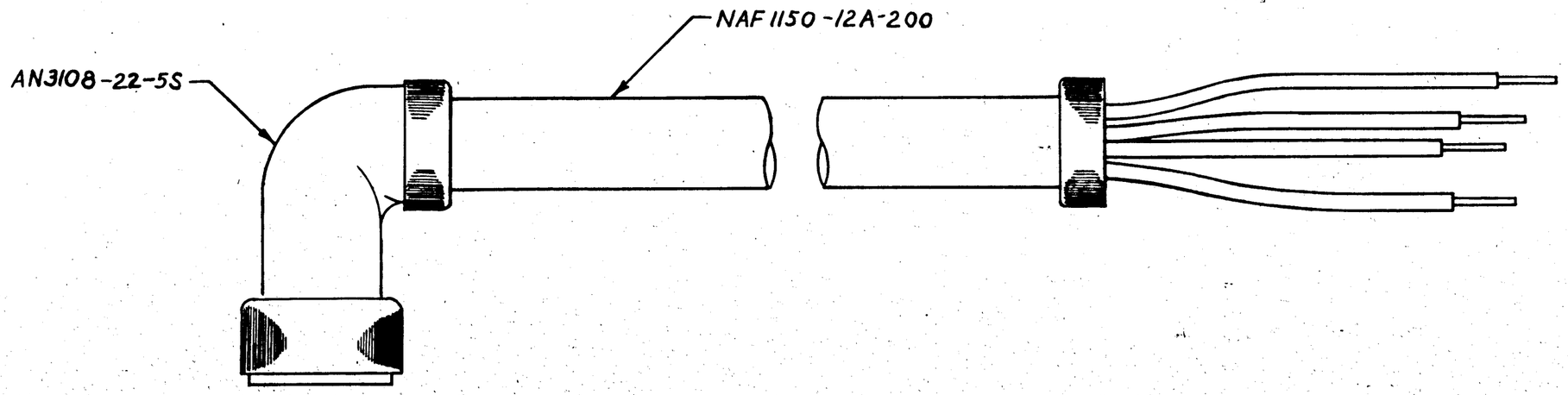

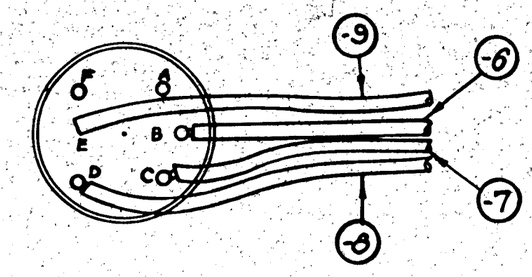

Ⓐ

WIRE DASH NO.	PIN NO.	WIRE NO.	LENGTH
-6	B	981	58"
-7	C	733	58"
-8	D	734	58"
-9	E	732	58"

C.13595 →
91876 90 ton
M.C. 153 (10)

APPROVED FOR TOOLING BY Howard

ASSY. DASH NO.	MODEL	NEXT ASSY.	REQ.
	PBY-5A	28F6955	1
	PBY-5	28F6955	1

REQUIREMENTS PER AIRPLANE

REPLACES — CALC. WT.

REPLACED BY — ACT. WT.

UNLESS OTHERWISE SPECIFIED ± 1/32 — SCALE 12" = 1'-0"

STAMP PART NUMBER WHERE SHOWN

PART NO	STOCK	MATERIAL	SPEC.	LH REQ. -0	RH REQ. -0	LH REQ. -2	RH REQ. -2	LH REQ. -3	RH REQ. -3	LH REQ. -4	RH REQ. -4	AMP REQ. -5	RH REQ. -5
	NAF 1150-12A-200 FLEX COND.											1	
	AN3108-22-5S PLUG											1	
-9	#14 GA. ELEC. WIRE		AN-J-C-48	1									
-8	#16 GA. ELEC. WIRE		AN-J-C-48	1									
-7	#16 GA. ELEC. WIRE		AN-J-C-48	1									
-6	#14 GA. ELEC. WIRE		AN-J-C-48	1									

PARTS LIST PER ASSY.

AC		9-21-42						
NAVY NONE		W. [illegible]	[illegible] 10-1-42					
HEAT TREAT	FINISH	DRAFT	CHECK	STRUCT	MAT	APPROV	ENG.	

NAME CABLE ASSY-FURN JUNC BOX TO G.O.9. XMTR.

CONSOLIDATED AIRCRAFT CORP. SAN DIEGO, CALIF.

OPP. HAND NONE

DWG. SIZE D — 28F6956

R 28F6956

LET	ALTERATION	DATE	BY

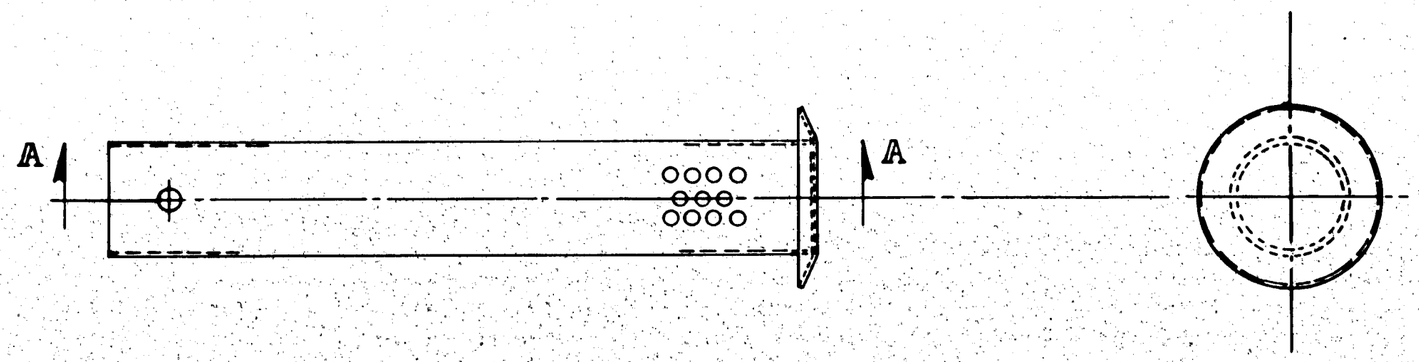

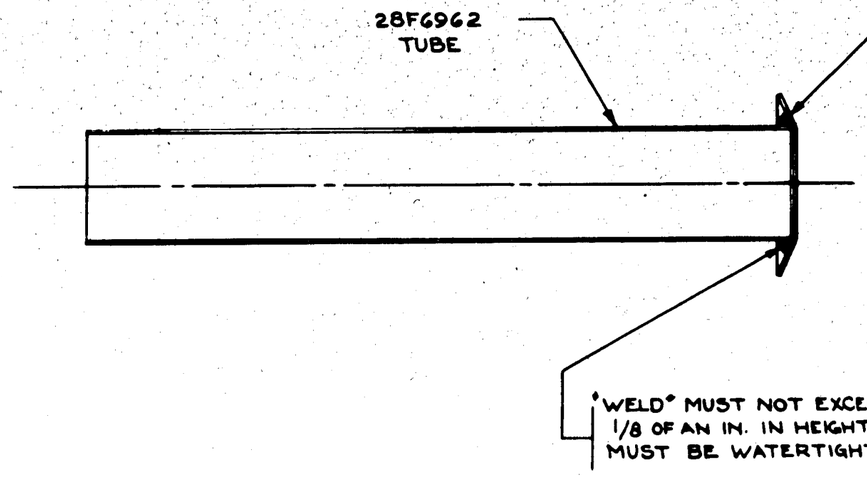

SECTION. — A-A.

M.C. 167(U)

ASSY. DASH NO.	MODEL	NEXT ASSY.	REQ'D
	PBY-5	28F6964	1

REQUIREMENTS PER AIRPLANE

REPLACES — .20# CALC. WT.

REPLACED BY — ASSY. WT.

UNLESS OTHERWISE SPECIFIED DIMENSIONS ARE ± 1/32. SCALE 12" = 1' 0"

STAMP PART NUMBER WHERE SHOWN

PART No.	STOCK	MATERIAL	SPEC.	LH REQ.	RH REQ.	LH REQ.	RH REQ.	LH REQ.	RH REQ.	LH REQ.	RH REQ.	LH REQ.	RH REQ.
28F6962				1									
28F6961					1								
PARTS LIST PER ASSY.				-0	-2	-3		-4		-5			

A C — VARIOUS WITH EF

NAVY —— — SAND BLAST & PASSIVATED — 9/30/42 — 10-7-42

HEAT TREAT — FINISH — DRAFT — CHECK — STRUCT — MECH — APPROV — ENG.

NAME ASSM'-FURN-TUBE-RADAR OPER'S VENTILATOR.

CONSOLIDATED AIRCRAFT CORP. SAN DIEGO, CALIF.

OFF HAND NONE

SIZE D — 28F6963

R

C.O.# A92801

LET	ALTERATION	DATE	BY
A	DIM. 3½ WAS 2½. NO WT. CHG.	2-6-42	[illegible]

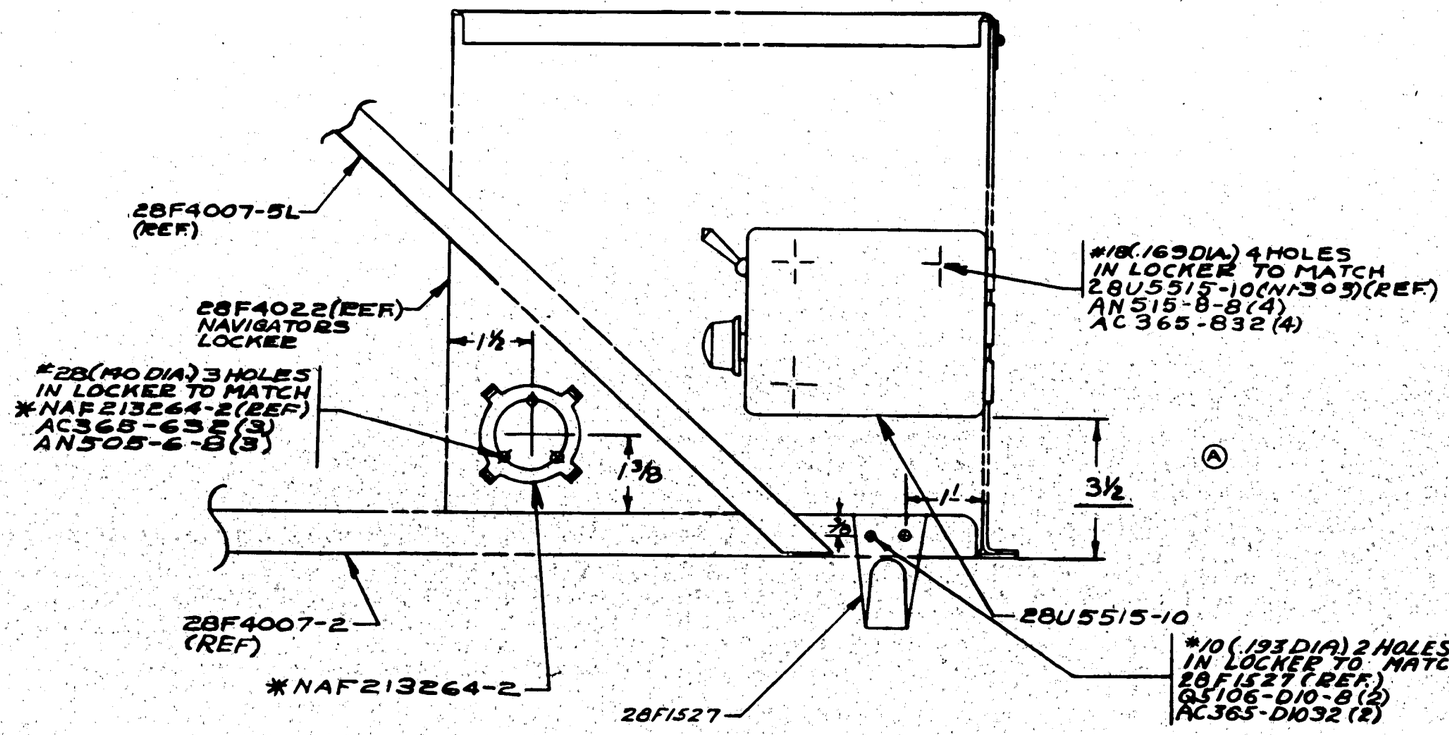

VIEW LOOKING F'W'D - PORT SIDE

* DENOTES GOV. FURN EQUIP.

C.# 13595
C.# 91876 90 COM

ASSY. DASH No.	MODEL	NEXT ASSY.	REQ.
	PBY-5A	28F6405	1
	PBY-5	28F6405	1

REQUIREMENTS PER AIRPLANE

REPLACES

REPLACED BY

.74 CALC. WT.

ACT. WT.

± 1/32

SCALE 6"=1'0"

STAMP PART NUMBER WHERE SHOWN

PART No.	STOCK	MATERIAL	SPEC.	LH REQ. -0	RH REQ. -0	LH REQ. -2	RH REQ. -2	LH REQ. -3	RH REQ. -3	LH REQ. -4	RH REQ. -4	LH REQ. -5	RH REQ. -5
*NAF213264-2 (MIC. CLIP)				1									
AN515-8-8					4								
AN505-6-8					3								
QS106D10-8						2							
AC365D1032							2						
AC365-832								4					
AC365-632									3				
28U5515-10										1			
28F1527												1	

PARTS LIST PER ASSY.

AC		SOFTWARE					
NAVY NONE	NONE	10/10/42					
HEAT TREAT	FINISH	DRAFT	CHECK	STRUCT	MAT	APPROV	ENG.

NAME INSTALL-FURNS - NAVIGATOR'S STATION BOX-RL24B

CONSOLIDATED AIRCRAFT CORP. SAN DIEGO, CALIF.

OPP. HAND

DWG. SIZE D

28F6971

APPROVED FOR TOOLING BY
P.B. Humphreys

R

LET	ALTERATION	DATE	BY

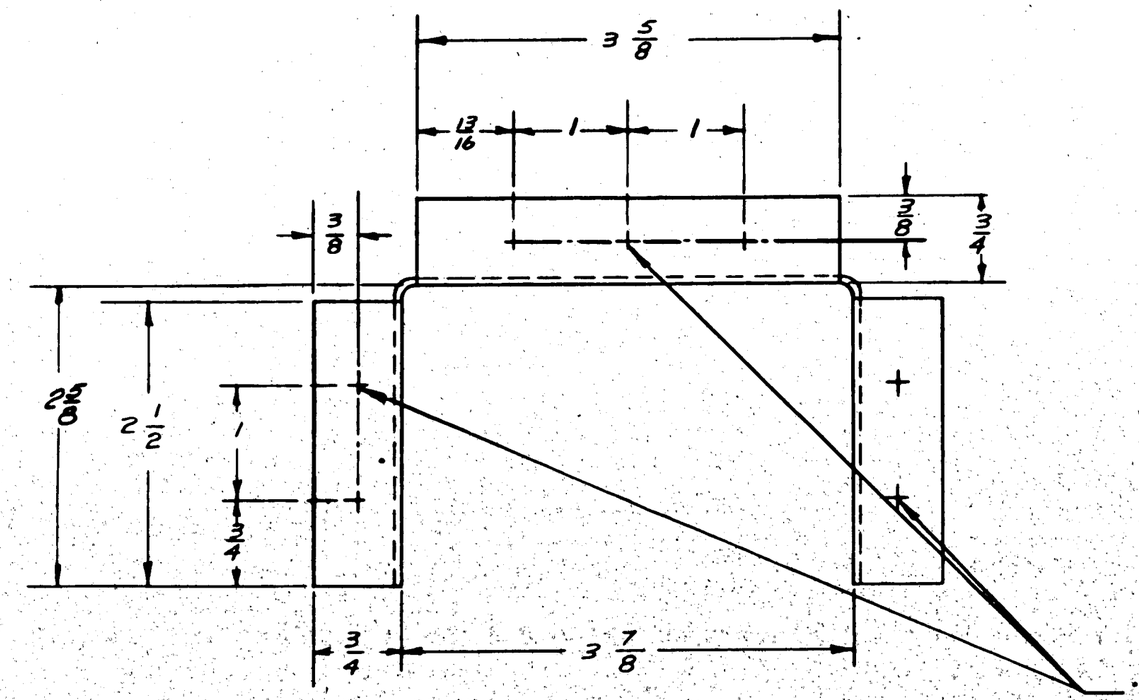

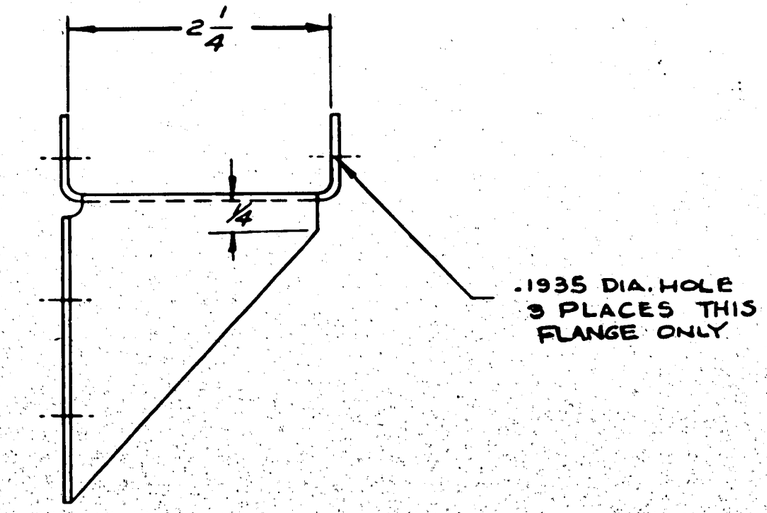

C.#31876 #9 CON
(M.C.R. #84-5)

ASSY. DASH No.	MODEL	NEXT ASSY.	REQ.
	PBY-5	28F6780	1

REQUIREMENTS PER AIRPLANE

REPLACES E.O. A62174A — CALC. WT. 011

REPLACED BY — ACT. WT.

UNLESS OTHERWISE SPECIFIED ± 1/32 — SCALE 12" = 1'0"

STAMP PART NUMBER WHERE SHOWN

PART No	STOCK	MATERIAL	SPEC
	051X9X4	ALLOY 24ST	47A10-T

PARTS LIST PER ASSY.

LH REQ.	RH REQ.	LH REQ.	RH REQ.	LH REQ.	RH REQ.	LH REQ.	RH REQ.	LH REQ.	RH REQ.
-0		-2		-3		-4		-5	

AC		MOE	
NAVY NONE	Z-P-GP	11-3-42	DRAWN Wm 11-3-42
HEAT TREAT	FINISH	DRAFT	CHECK / STRUCT / MAT / APPROV / ENG

NAME UPPER BRKT.-FURNS. NAV'S. REBREATHER - BLKHD #2

OPP. HAND

CONSOLIDATED AIRCRAFT CORP. SAN DIEGO, CALIF.

DWG. SIZE D — 28F6975

LET	ALTERATION	DATE	BY

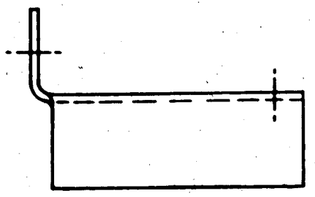

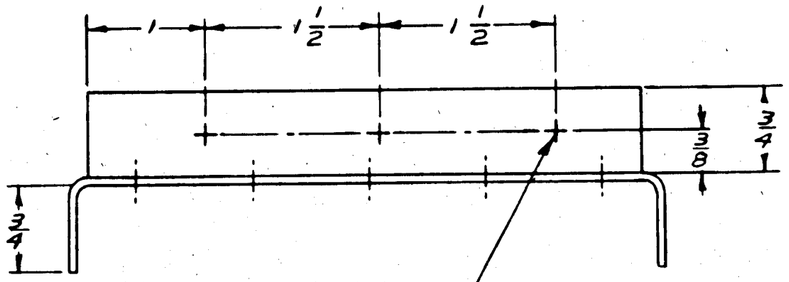

.1935 DIA. HOLE
3 PLACES

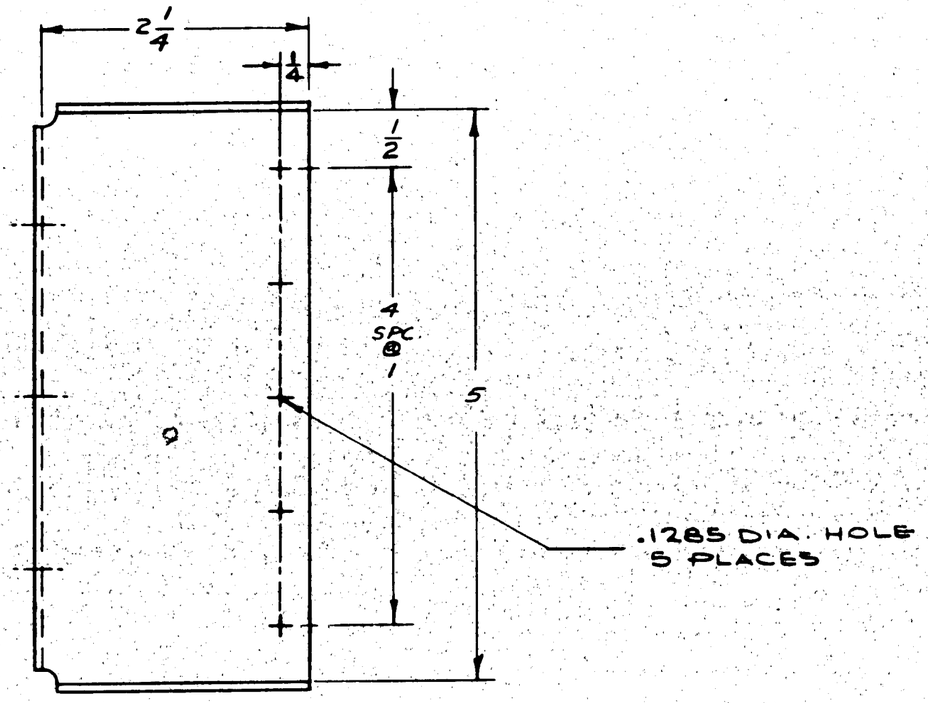

.1285 DIA. HOLE
5 PLACES

C.91876 *30$ CH
(CHG *84-5)

ASSY. DASH NR.	MODEL	NEXT ASSY.	REQ.
	P8Y-5	28F6780	1

REQUIREMENTS PER AIRPLANE

REPLACES E.O. A62174 A	.014 CALC WT.
REPLACED BY	AGT. WT.
CUT ON DIMENSIONS UNLESS OTHERWISE SPECIFIED ± 1/32	SCALE 12"=1'0"

STAMP PART NUMBER WHERE SHOWN.

PART NO	STOCK	MATERIAL	SPEC.
	051 X 6 3/4 X 3 1/4	AL ALLOY 24ST	42A10-T

PARTS LIST PER ASSY.

LH REQ.	RH REQ.	LH REQ.	RH REQ.	LH REQ.	RH REQ.	LH REQ.	RH REQ.	LH REQ.	RH REQ.
-0		-2		-3		-4		-5	

AC		MOE	DRAFTSMAN 11-9-42				
NAVY NONE	Z-P-GP	11-24-42					
HEAT TREAT	FINISH	DRAFT	CHECK	STRUCT	MAT	APPROV	ENG

NAME LOWER BRK'T.-FURN'S. NAV'S. REBREATHER BLKHD #2

OPP. HAND

CONSOLIDATED AIRCRAFT CORP. SAN DIEGO, CALIF.

DWG. SIZE D

28F6976

R

LET	ALTERATION	DATE	BY
A	TO FACE OF DWG. & B/M ADDED 29F7118. IN B/M CREATED -2 ASSY. PER ENG. 70-57(2)		

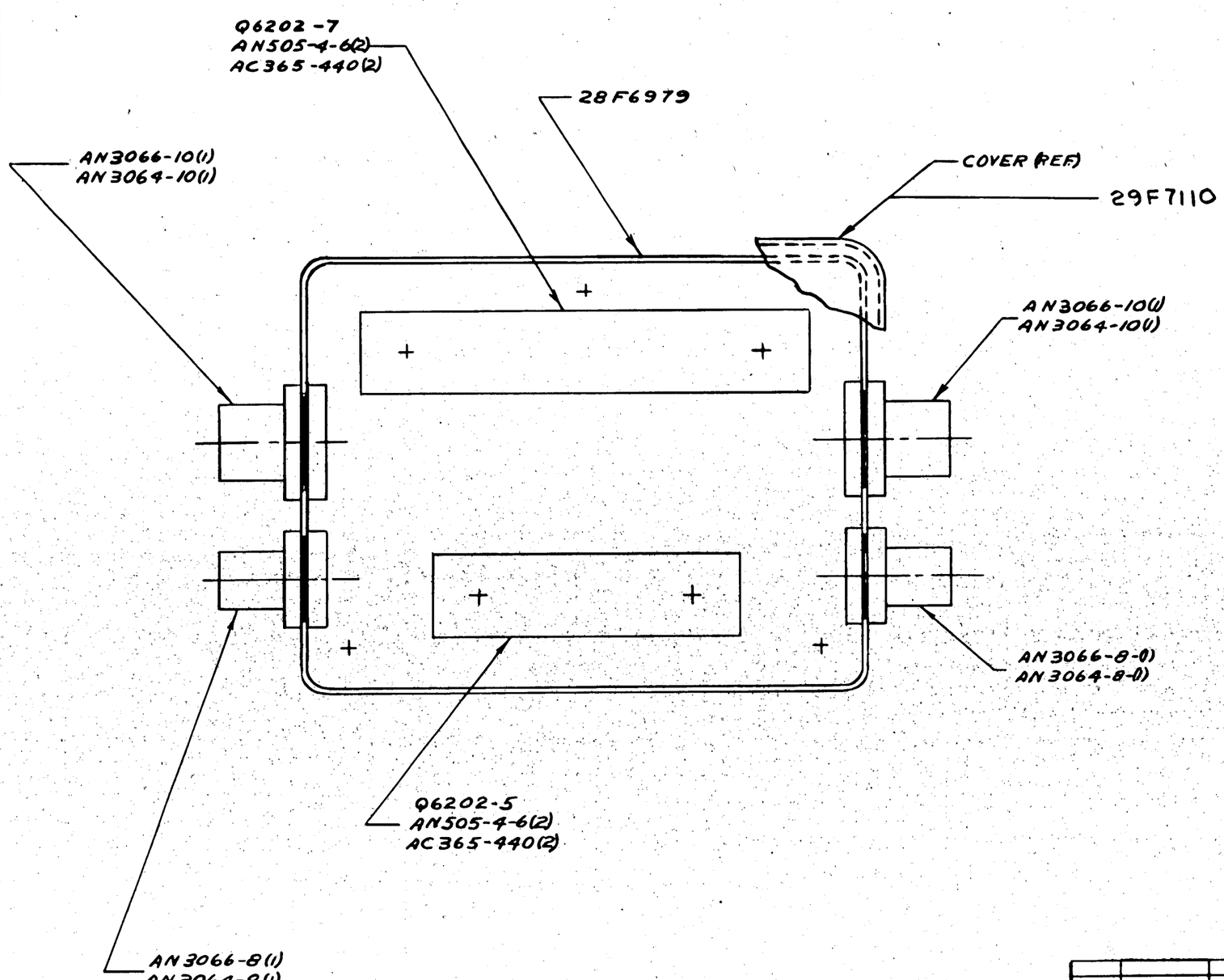

C. 91876 #90 OM
MCR 138

APPROVED FOR TOOLING BY
HOWARSH
10-26-42

ASSY. DASH NO.	MODEL	NEXT ASSY.	REQ.
-2	PB2Y3	29F7105	1
-0	PBY-5	28F6980	1

REQUIREMENTS PER AIRPLANE

REPLACES EQA63855 — CALC. WT. .79
REPLACED BY — ADV. WT.

UNLESS OTHERWISE SPECIFIED DIMENSIONS ± V32 — SCALE 12" = 1'0"

STAMP PART NUMBER WHERE SHOWN

PART NO.	STOCK	MATERIAL	SPEC.	LH REQ. -0	RH REQ. -0	LH REQ. -2	RH REQ. -2	LH REQ. -3	RH REQ. -3	LH REQ. -4	RH REQ. -4	LH REQ. -5	RH REQ. -5
Q6202-7				1		1							
Q6202-5					1		1						
AC365-440				4		4							
AN3066-10				2		2							
AN3064-10				2		2							
AN3066-8				2		2							
AN3064-8				2		2							
AN505-4-6				4		4							
29F7110				1		1							
28F6979				1		1							

PARTS LIST PER ASSY.

AC
NAVY NONE — HEAT TREAT
Z-P-GP — FINISH
MOE — DRAFT 10-29-42 — CHECK — STRUCT — MAT — APPROV — ENG

NAME BOX-ASS'Y-FURN.-REC'R. TO CONTROL UNIT-JUNCTION
OPP. HAND
CONSOLIDATED AIRCRAFT CORP. SAN DIEGO, CALIF.
DWG. SIZE D — 28F6978

R 10-27-42

LET	ALTERATION	DATE	BY
A	DIM. 1 7/32 WAS 1 9/32. WT. CHG. NEG.	10-23-42	MOE
B	ADDED REQUIREMENTS FOR PBY-3. CHG. 70-57 (2)	11-6-42	
C	ADDED #30(.128) HOLE & DIMS. 1/2 & 1 1/32. WT. CHG. NEG.	6-6-43	
D	ON FACE OF DWG. ADDED NOTE "CTRSK---- OUTSIDE" WT. CHG. NEG.	6-9-43	

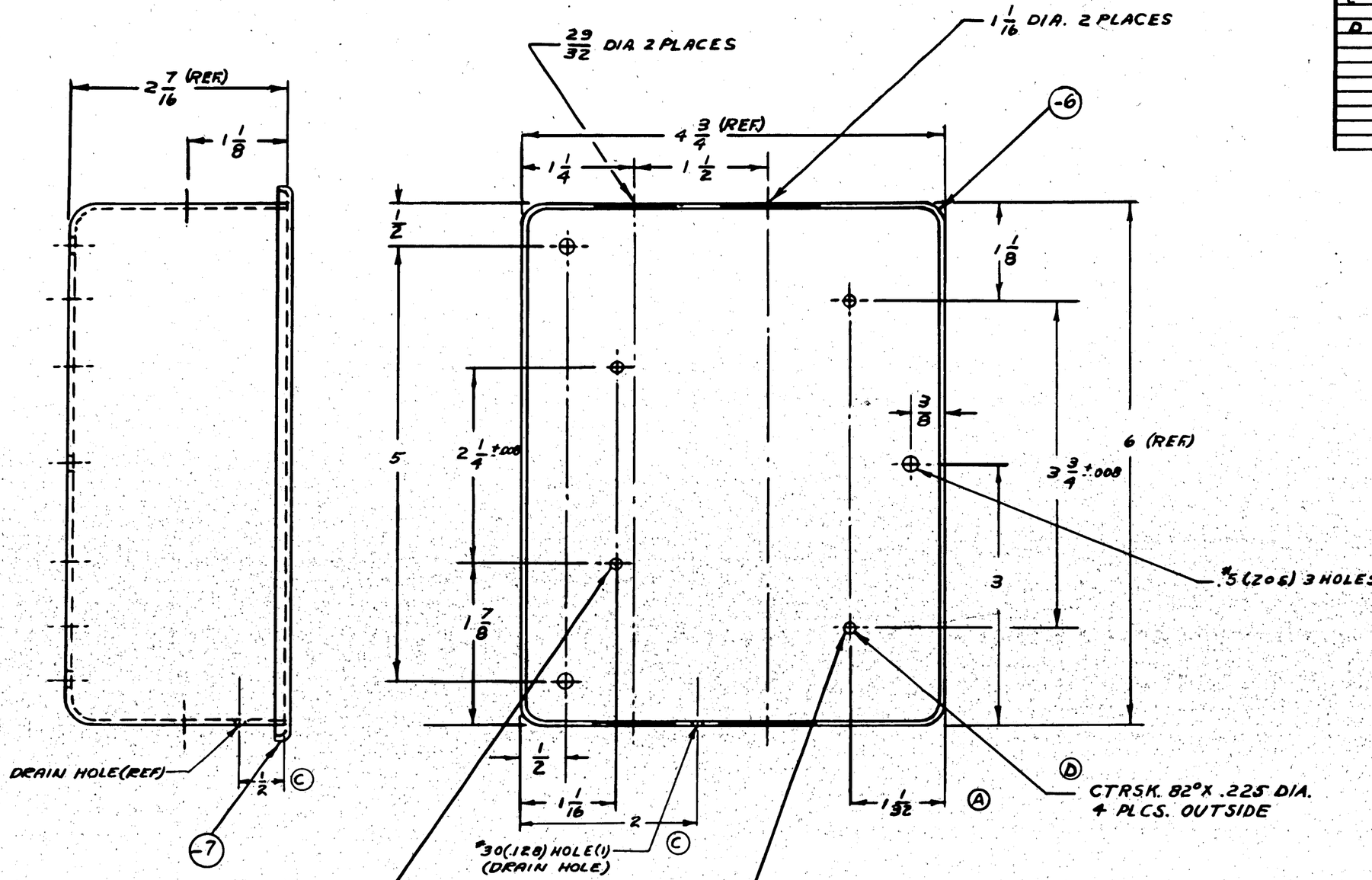

C.N025464 #35 ON
C. 91876 #90 ON
MCR 138

NOTE:
BOX 43-214N MAY BE PURCHASED FROM POULSEN & NARDON, LOS ANGELES, CALIF.

APPROVED FOR TOOLING BY HOWARTH 10/30/42

ASSY. DASH NO.	MODEL	NEXT ASSY.	REQ.
	PBY-5A	28F6978	1
	PBY-3	28F6978	1
	PBY-5	28F6978	1

REQUIREMENTS PER AIRPLANE

REPLACES E.O. A63854 — CALC. WT. .66 LBS.
REPLACED BY — ACT. WT.
UNLESS OTHERWISE SPECIFIED DIMENSIONS ARE IN INCHES ± 1/32 — SCALE 12" = 1'0"
STAMP PART NUMBER WHERE SHOWN

PART NO.	STOCK	MATERIAL	SPEC.	LH REQ. -0	RH REQ. -0	LH REQ. -2	RH REQ. -2	LH REQ. -3	RH REQ. -3	LH REQ. -4	RH REQ. -4	LH REQ. -5	RH REQ. -5
-7 COVER) C.A.C. BOX 43-214N				1									
-6 BOX)					1								

PARTS LIST PER ASSY.

AC — NAVY NONE — HEAT TREAT — ZP-GP — FINISH

MOE	DRAFT	CHECK	STRUCT	MATL	APPROV	ENG
10-23-42						

NAME BOX-FURN.-REC'R. TO CONTROL UNIT-JUNCTION
OPP. HAND
CONSOLIDATED AIRCRAFT CORP. SAN DIEGO, CALIF.
DWG. D SIZE 28F6979

RS 10 27 42

LET		DATE	BY
A	CREATED -16 SUB-ASSY. WT. CHG.		
	MISC.	3-10-43	[illegible]
B	ADDED -8-6(11) FOR #346 &		
	ON NO. WT. CHG.	4-7-43	PANTE
C	IN B/M, ADDED "Q1601-22" AT AC225-8 & Q1601-22 ADDED "SEE NOTE." ON FACE. REPLACED CALLOUT AC225-8(3) WITH NOTE: "Q1601-22 OR AC225-8(3)". REPLACED CALLOUT AC225-8(9) WITH NOTE: "Q1601-22 OR AC225-8(9)". REPLACED CALLOUT AC225-8(7) WITH NOTE: "Q1601-22 OR AC225-8(7)". REPLACED CALLOUTS AC225-8(1) WITH NOTE: "Q1601-22 OR AC225-8(1)." NO WT. CHG.	9-28-43	HODIK

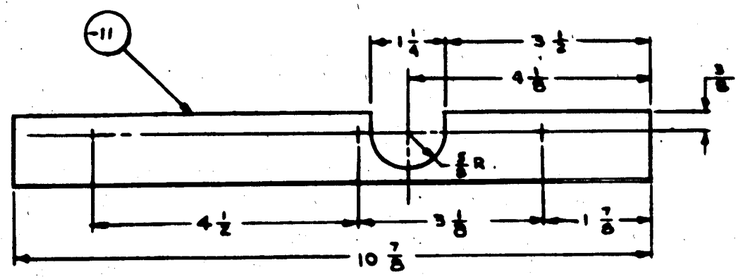

-10 SUB-ASSY
SCALE: 6"=1'0"

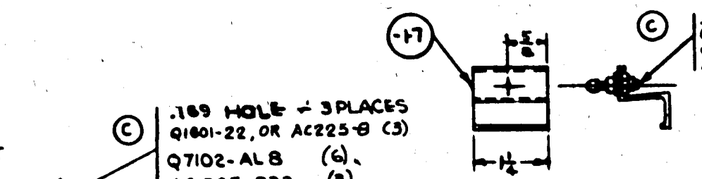

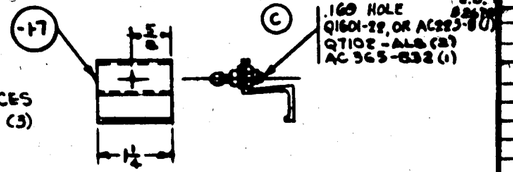

-16 SUB-ASSY
SCALE: 6"=1'0"

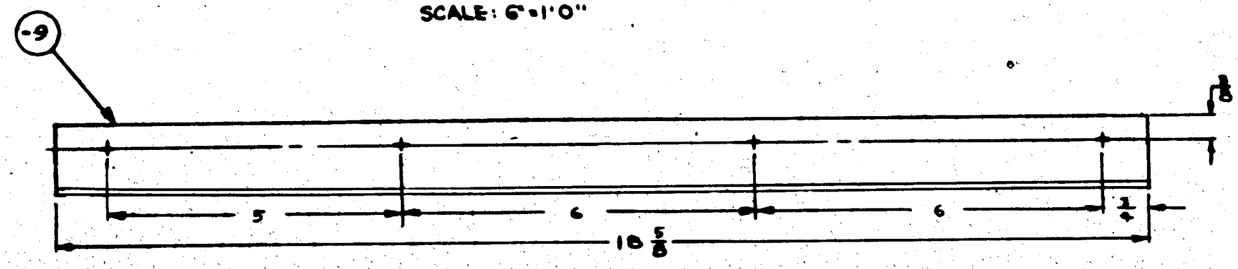

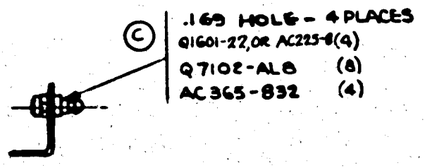

-8 SUB-ASSY
SCALE: 6"=1'0"

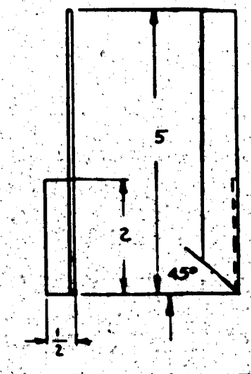

-14 CLIP
SCALE 6"=1'0"

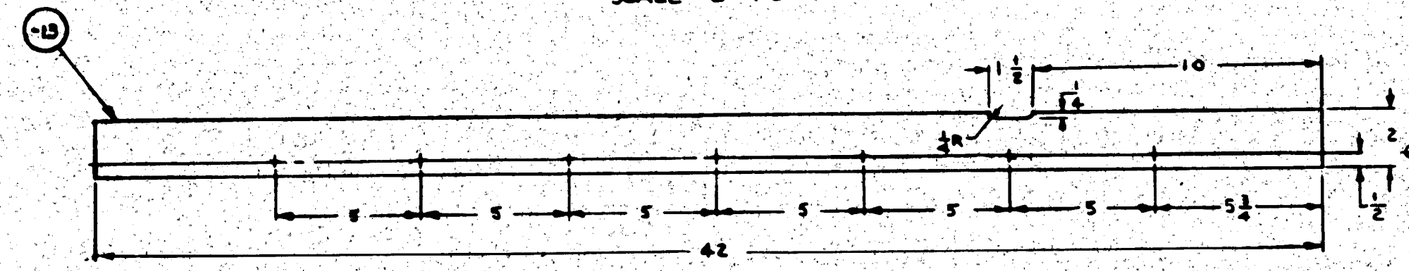

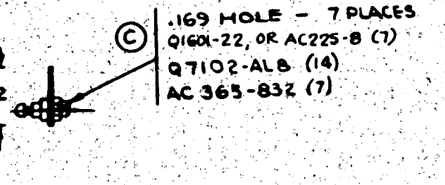

-12 SUB-ASSY
SCALE: 3"=1'0"

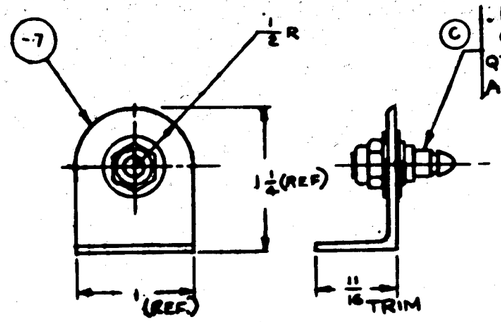

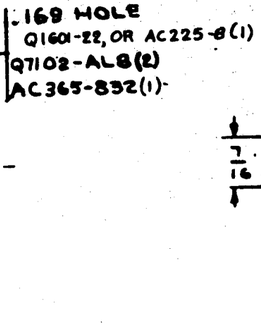

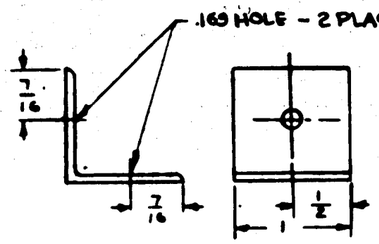

6 SUB-ASSY
12"=1'0"

-15 CLIP
12"=1'0"

DASH NO	WT #
-6	.025
-8	.292
-10	.14
-12	.64
-14	.021
-15	.0134
-16	.025

CALC. WT

ASSY. DASH NO.	MODEL	NEXT ASSY.	REQ.
-6	PBY-5	28F1068	11
-16	PBY-5	28F1068	1
-15	PBY-5	28F1068	1
-14	PBY-5	28F1068	1
-12	PBY-5	28F1068	1
-10	PBY-5	28F1068	1
-8	PBY-5	28F1068	1
-6	PBY-5	28F1068	12

REQUIREMENTS PER AIRPLANE

REPLACES C.S.S. A74098 & A74401 — NOTED CALC. WT.
REPLACED BY — ACT. WT.
UNLESS OTHERWISE SPECIFIED ± 1/32 — SCALE NOTED
STAMP PART NUMBER WHERE SHOWN

PART NO.	STOCK	MATERIAL	SPEC.	LH REQ. -0	RH REQ. -2	LH REQ. -8	RH REQ. -4	LH REQ. -5	RH REQ.
Q1601-22	(SEE NOTE)			1					
Q7102-AL8					2				
AC225-8	(SEE NOTE)								
AC365-832									
-17	K9048 X 1 1/8	AL. ALL. EXT.	46A9T		1				
-16	SUB-ASSY								
Q1601-22	(SEE NOTE)			1					
Q7102-AL8					14				
AC365-832					7				
AC225-8	(SEE NOTE)								
-13	.064 X 2 1/8 X 42 1/4	ALCLAD 24S-T3	QQA 250/5	1					
-12	SUB-ASSY								
Q1601-22	(SEE NOTE)			1					
Q7102-AL8					6				
AC365-832					3				
AC225-8	(SEE NOTE)				1				
-11	K13689 X 11	AL. ALL. EXT.	46A9T	1					
-10	SUB ASSY								
Q1601-22	(SEE NOTE)			1					
Q7102-AL8					8				
AC365-832					4				
AC225-8	(SEE NOTE)				1				
-9	K13689 X 8 3/4	AL. ALL. EXT.	46A9T	1					
-8	SUB ASSY								
Q1601-22	(SEE NOTE)			1					
Q7102-AL8					2				
AC365-832					1				
AC225-8	(SEE NOTE)				1				
-7	K13689 X 1 1/8	AL. ALL. EXT.	46A9T	1					
-6	SUB ASSY								
-15	K78J X 1 1/8	AL. ALL. EXT.	46A9T			1			
-14	K9076 X 5 1/8	AL. ALL. EXT.	46A9T					1	

PARTS LIST PER ASSY.

AC					
NAVY NOTED	NOTED				
HEAT TREAT	FINISH	DRAFT	CHECK	STRUCT	MAT
		2-10-43	PT		

APPROVED FOR TOOLING BY V. Brown 3-18-43
CHANGED ONLY

FINISH = Z-P
FOR -7, -9, -11, -13, -14 & -15.

NAME CLIPS - FURN - CURTAIN - DRAFT - BLKHD #1
CONSOLIDATED AIRCRAFT CORP. SAN DIEGO, CALIF.

OPP. HAND
DWG. D SIZE
28F6985

1,1464

R 28F6985

LET	ALTERATION	DATE	BY

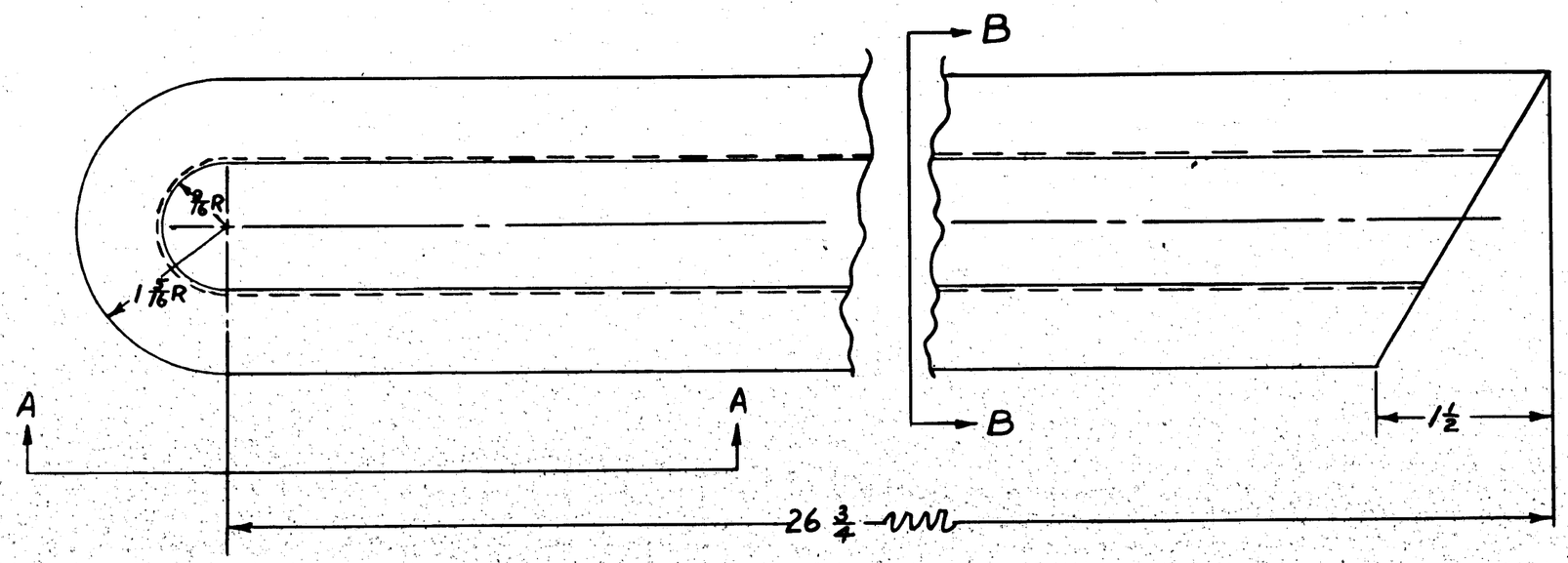

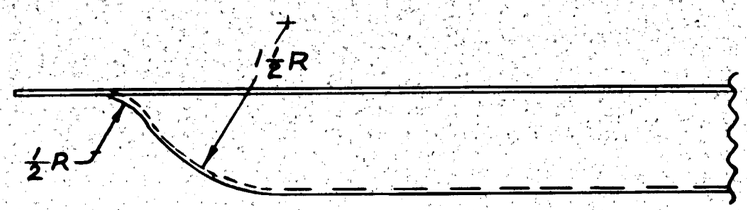

VIEW A-A

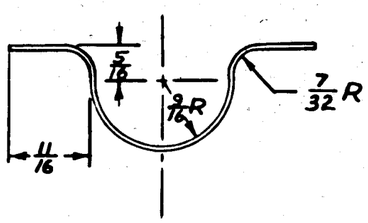

SECTION B-B

MC.#151-2

ASSY. DASH NO.	MODEL	NEXT ASSY.	REQ.
-R	PBY-5A	28F6988	1
-R	PBY-5	28F6988	1
-L	PBY-5A	28F6988	1
-L	PBY-5	28F6988	1

REQUIREMENTS PER AIRPLANE

REPLACES — CALC. WT. .28

REPLACED BY — ACT. WT.

UNLESS OTHERWISE SPECIFIED ± 1/32

SCALE 12"=1'-0"

STAMP PART NUMBER WHERE SHOWN

PART NO.	STOCK	MATERIAL	SPEC.	LH REQ. -0	RH REQ. -2	LH REQ. -3	RH REQ. -4	LH REQ. -5	RH REQ.
	.040 X 3 X 30	ALC 24ST	47A8 CONST						

PARTS LIST PER ASSY.

A C
NAVY
HEAT TREAT

Z-P-GP
FINISH

11-18-42 W MITCHELL — DRAFT; CHECK; STRUCT; MAT; APPROV; ENG.

NAME CHANNEL-FURNS-RADAR CABLE-GUARD

OPP. HAND 28F6989-R

CONSOLIDATED AIRCRAFT CORP. SAN DIEGO, CALIF.

DWG. SIZE D — 28F6989

LET	ALTERATION	DATE	BY

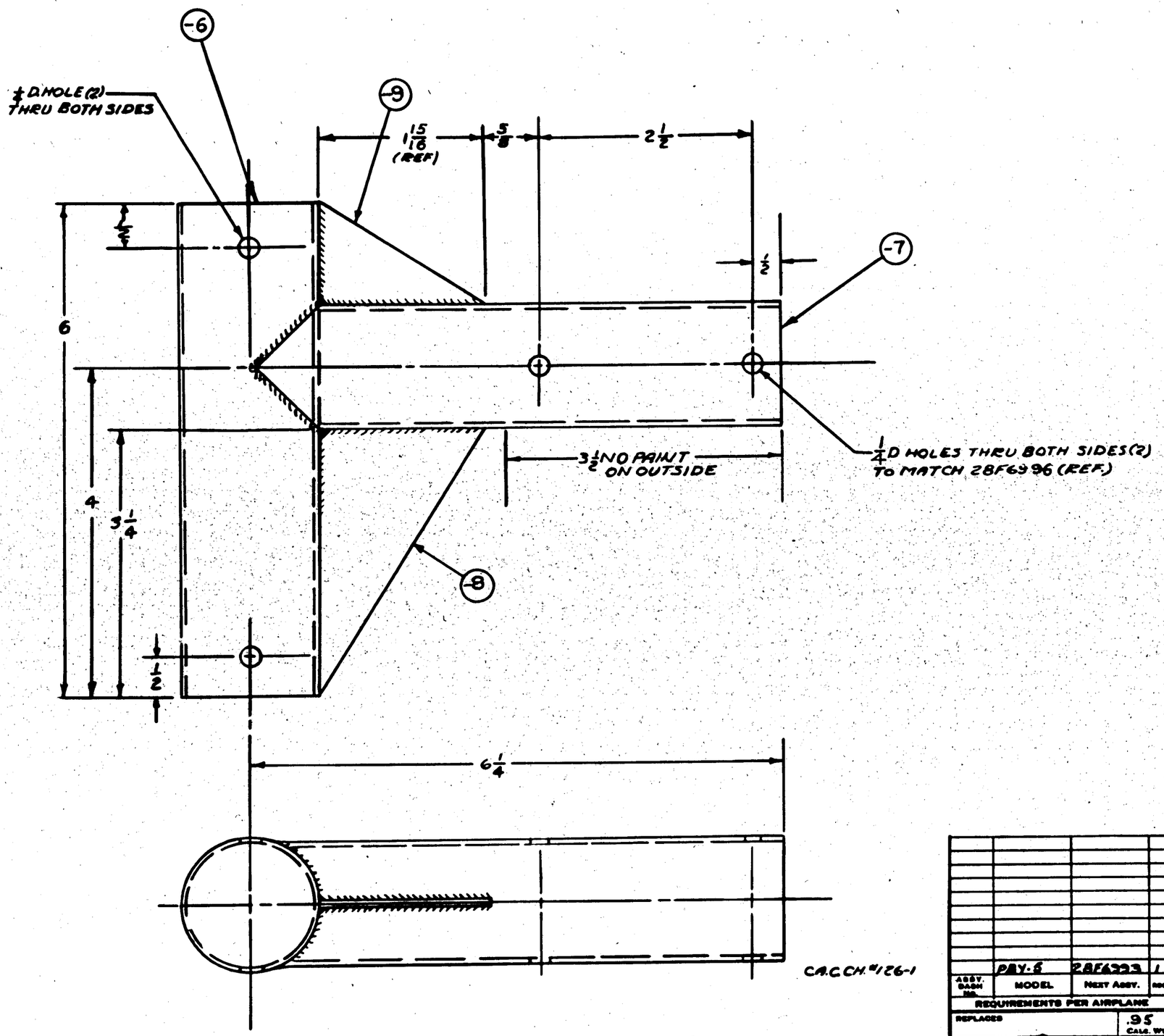

C.A.C. CH. #126-1

NOTE: NO PAINT ON INSIDE OF -6.
CLEAN INSIDE OF -6 AFTER WELD
HEAT TREAT: NORMALIZE AFTER WELDING.

ASSY. DASH No.	MODEL	NEXT ASSY.	REQ'D
	PBY-6	28F6993	1

REQUIREMENTS PER AIRPLANE

REPLACES — Calc. Wt. .95

REPLACED BY — Act. Wt.

UNLESS OTHERWISE SPECIFIED: ± 1/32 — SCALE 12"-1'0"

STAMP PART NUMBER WHERE SHOWN

PART No.	STOCK	MATERIAL	SPEC.	LH REQ. -0	RH REQ. -0	LH REQ. -2	RH REQ. -2	LH REQ. -3	RH REQ. -3	LH REQ. -4	RH REQ. -4	LH REQ. -5	RH REQ. -5
-5	.064 x 1 3/32 x 2 3/16	CM. ALLOY STL.	AN-QQ-S-685			2							
-8	.064 x 2 3/16 x 3 1/2	CM. ALLOY STL.	AN-QQ-S-685					1					
-7	.065 x 1 1/2 O.D. x 6 1/2	CM. ST. TUBE	AN-WW-T-856							1			
-6	.058 x 1 3/4 O.D. x 7	CM. ST. TUBE	AN-WW-T-856									1	

PARTS LIST PER ASSY.

A.C.		WALLACE	Wallace		
NAVY NOTED	CAD. CP. INSIDE & OUT EXCEPT AS NOTED	11-3-42	LINN		
HEAT TREAT	FINISH	DRAFT	CHECK	STRUCT	MAT	APPROV	ENG.

NAME TEE SUPPORT-FURNS-LEG-BOMBER'S ADJ. SEAT

CONSOLIDATED AIRCRAFT CORP. SAN DIEGO, CALIF.

OPP. HAND

SIZE D — 28F6994

R 7669 182.

LET	ALTERATION	DATE	BY
A	ADDED DIMS. 7/8 (A) 1 3/8 & 1/2 LOCATING OF CANADIAN & AMPHENOL FERRULE		
JAN	INSTALLATIONS. AND WT. CH.	5-7-43	[illegible]
B	ADDED NOTE II (B) AND WT. CH.	5-7-43	[illegible]
C	ON FACE OF DWG. ADDED DETAIL & NOTE NO. III. CHANGED DETAIL OF AMPHENOL CABLE FROM INSIDE FERRULE TO OUTSIDE FERRULE. WT. CHG. NEG.	6-12-43	[illegible]

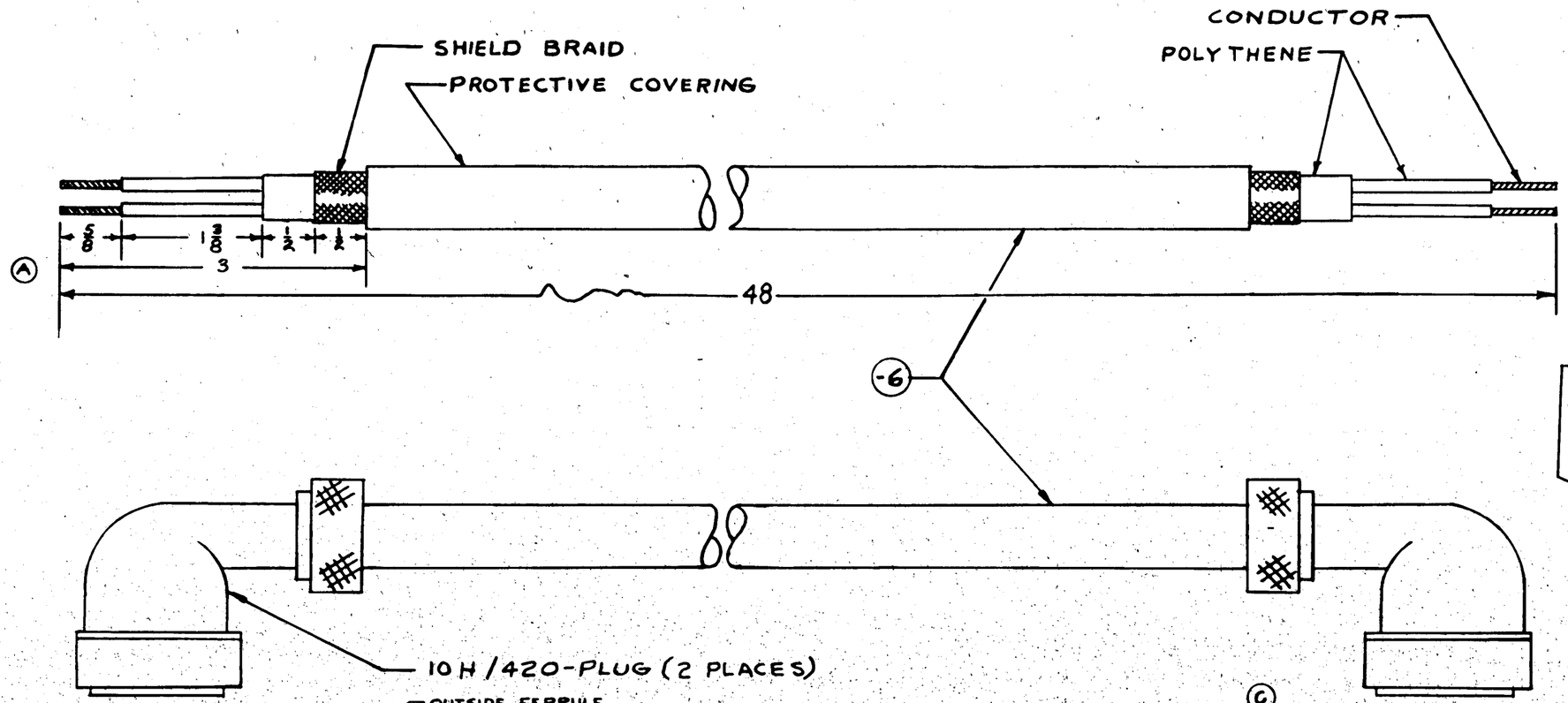

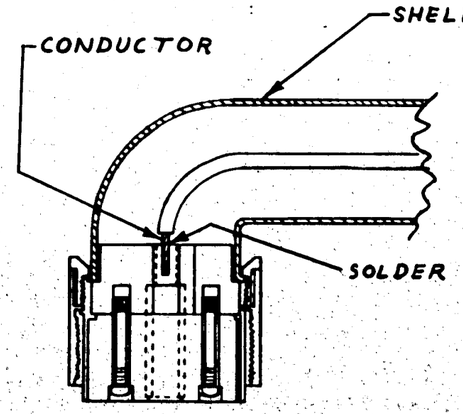

SIDE SECTION

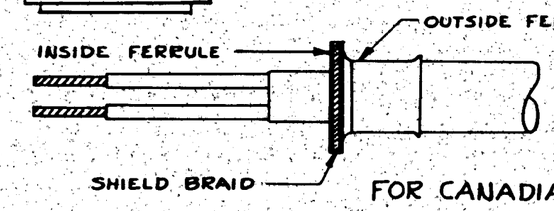

FOR CANADIAN CABLE

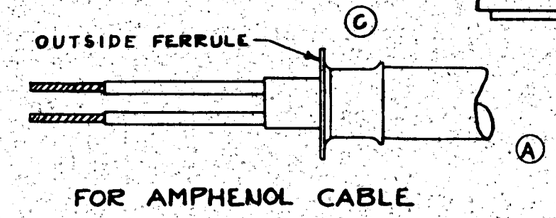

FOR AMPHENOL CABLE

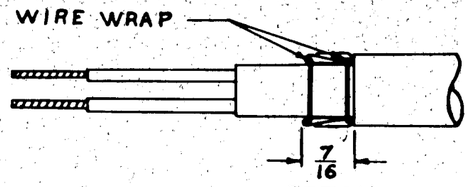

DETAIL

NOTE:-

III WHEN STRIPPING AMPHENAL CABLE LEAVE SHIELDING FULL LENGTH UNTIL AFTER IT HAS BEEN FOLDED AS SHOWN IN DETAIL. FOLDS MAYBE HELD IN PLACE BY A WRAP OF WIRE WHEN EACH FOLD IS MADE. SLIP OUTSIDE FERRULE OVERFOLDS. CUT SURPLUS SHIELDING OFF & THEN DIP ASSY IN SOLDER POT FOR APPROX. 3 TO 5 SECONDS.

Ⓒ

NOTES:

I. PERTINENT INFORMATION

(A) LENGTH OF CABLE WILL BE APPROXIMATE. EXACT LENGTHS FOR EACH "BATCH" WILL BE DETERMINED BY TEST AND SUPPLIED TO SHOP BY RADAR TEST GROUP

(B.) SINCE THE POLYTHENE INSULATION OF THE CABLE MELTS AT 80°C., TINNING MUST BE DONE QUICKLY WITH A CLEAN HOT IRON TO PREVENT SPOILING THE CABLE.

(c.) CABLE CAN NOT BE BENT IN LESS THAN A 10" RADUIS DUE TO "COLD FLOW" PROPERTIES OF POLY THENE UNDER COMPRESS'N.

(D.) NOTE: IF CABLE INSULATION IS DAMAGED BY HEAT, IF CABLE IS SQUEEZED WITH PLIERS OR VISE, OR IF WIRE IS CUT TOO SHORT, THE CABLE MUST BE REPLACED.

II PREPARATION OF CABLE:

(A) AFTER BEING CUT TO LENGTH, THE CABLE SHOULD LIE FLAT FOR 24 HOURS BEFORE ASSEMBLY TO ALLOW THE INSULATION TO CONTRACT, SINCE THIS WILL HAVE STRETCHED SLIGHTLY DUE TO COILING. SEAL CUT ENDS WITH LIQUID POLYSTRENE TO PREVENT MOISTURE ENTRANCE AND WRAP WITH TAPE FOR MECHANICAL PROTECTION UNTIL READY FOR USE.

CAUTION:- CABLE MUST BE HANDLED WITH GREAT CARE; SQUEEZING CABLE IN VISE WILL DESTROY ELECTRICAL PROPERTIES.

Ⓑ (B.) CANADIAN CABLE IS INTERCHANGEABLE WITH AMERICAN MANUFACTURED CABLE. CONSULT DRAWING FOR STRIPPING DETAILS.

NOTE: 10H/420 PLUG TO BE OBTAINED FROM G.F.E. CABLES OF BUAERO D'W'G 7889-34.

C 13595
C 91876 "90 ℄ ON

✱ DENOTES GOV'T FURNISHED EQUIP.

ASSY. DASH NO.	MODEL	NEXT ASSY.	REQ.
	PBY-5A	28F6955	1
	PBY-5	28F6955	1

REQUIREMENTS PER AIRPLANE

REPLACES: 1.2 CALC. WT.

REPLACED BY: ACT. WT.

SCALE: NONE

STAMP PART NUMBER WHERE SHOWN

PART NO.	STOCK	MATERIAL	SPEC.	-0 LH REQ.	-0 RH REQ.	-2 LH REQ.	-2 RH REQ.	-3 LH REQ.	-3 RH REQ.	-4 LH REQ.	-4 RH REQ.	-5 LH REQ.	-5 RH REQ.
✱	10H/420	PLUGS			2								
✱-6	BA4 CABLE 50				1								

PARTS LIST PER ASSY.

A.C.		FINKLE						
NAVY NONE	NONE	11-25-42		J	12-4-42			
HEAT TREAT	FINISH	DRAFT	CHECK	STRUCT	MAT	[illegible]	ENG.	

NAME CABLE ASSY.-FURNS. A.S.V.-TRANS. TO POLY-PLEXER

CONSOLIDATED AIRCRAFT CORP. SAN DIEGO, CALIF.

OPP. HAND

SIZE D

28F6997

R

28F6997

LET	ALTERATION	DATE	BY
A	CHG'D. DIM. 65 TO 68 ADDED		
	STRIPPING DETAIL IN B/M ADDED		
	VINOLITE SLEEVING (R). WT. CHANGE.	5-7-43	WALLACE

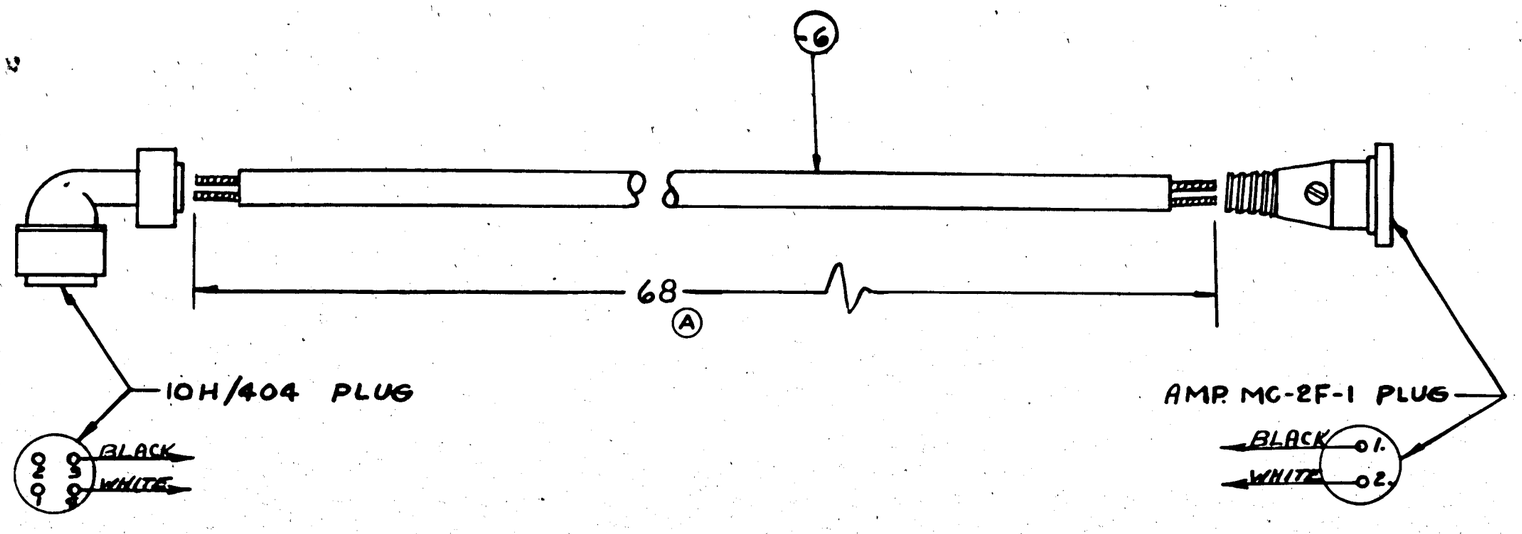

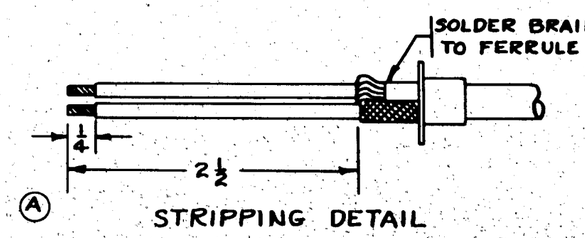

STRIPPING DETAIL

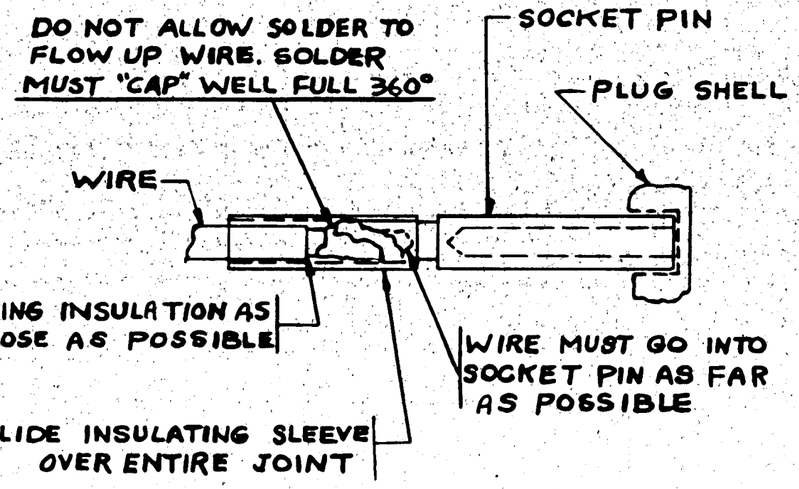

METHOD OF SOLDERING WIRE TO PIN

10H/404 & AMP. MC-2F-1 PLUGS TO BE OBTAINED FROM G.F.E CABLES, BU AERO D'W'G 7889-37.

NOTE: FOR -6 USE BELDON 8422 OR EQUIVALENT.

C.NO25464
MC 151-11

*DENOTES G.F.E.

ASSY. DASH NO.	MODEL	NEXT ASSY.	QTY.
	PBY-5A	28F6955	1
	PBY-5	28F6955	N

REQUIREMENTS PER AIRPLANE

REPLACES — QTY. 80

REPLACED BY — ASY. WT.

UNLESS OTHERWISE SPECIFIED DIMENSIONS ARE IN INCHES — SCALE SKETCH

± 1/32

STAMP PART NUMBER WHERE SHOWN

PART NO.	STOCK	MATERIAL	SPEC.	LH REQ. -0.	RH REQ. -2	LH REQ. -3	RH REQ. -4	LH REQ. -5	RH REQ.
	VINOLITE	SLEEVING	SL7 1/2"						R
	10H/404 *								N
	AMP. MC2F-1 *								N
* -6	BELDON 8422/46								

PARTS LIST PER ASSY.

AC — NAVY NONE — HEAT TREAT — NONE — FINISH — FINISH — 11-27-42 — DRAFT — CHECK — STRUCT — MAT — APPROV — ENG.

NAME CABLE ASSY.- FURNS. P.D.U. TO POLY-PLEXER

CONSOLIDATED AIRCRAFT CORP. SAN DIEGO, CALIF.

OPP HAND — SIZE D — 28F6998

R

LET	ALTERATION	DATE	BY

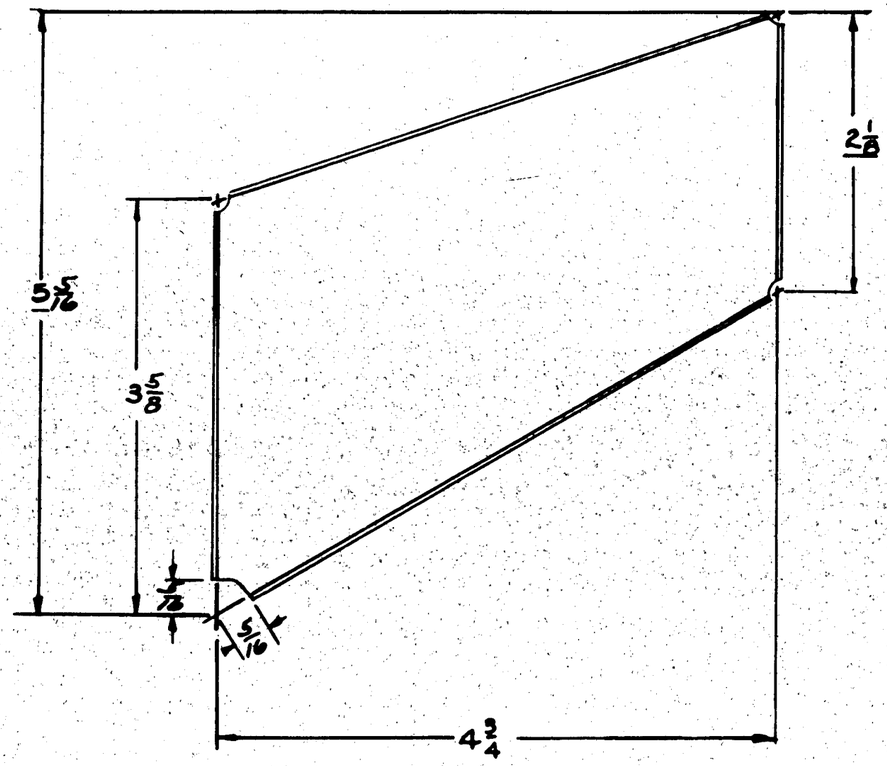

FINISH —
ANODIZE
P-27 PRIMER
ALUMINIZED PRIMER

ALL BEND & RELIEF RADII 1/8 R

ASSY. DASH NO.	MODEL	NEXT ASSY.	QUAN.
	PBY-5B	28F7070	1

REQUIREMENTS PER AIRPLANE

REPLACES — CALC. WT.

REPLACED BY — ACT. WT.

UNLESS OTHERWISE SPECIFIED ± 1/32 — SCALE 12" = 1'-0"

STAMP PART NUMBER WHERE SHOWN

PART NO.	STOCK	MATERIAL	SPEC.	LH REQ.	RH REQ.	LH REQ.	RH REQ.	LH REQ.	RH REQ.	LH REQ.	RH REQ.	LH REQ.	RH REQ.
28F7074-0	.040×6×7	ALC 2110	4788-A	1									
PARTS LIST PER ASSY.				-0		-2		-3		-4		-5	

AC		11-6-41	Stress		C.DG					
NAVY SR-5B	2-P-AP	Manager	Weight		12-27-41					
HEAT TREAT	FINISH	DRAFT	CHECK	STRUCT	MAT	APPROV	ENG
---	---	---	---	---	---	---	---

NAME BRACKET-FURUS-CO-PILOT INDICATOR TRAY

OPP. HAND NONE

CONSOLIDATED AIRCRAFT CORP. SAN DIEGO, CALIF.

DWG. SIZE D — 28F7074

R

LET	ALTERATION	DATE	BY
A	IN MAT. 24ST WAS 24S0.	10-19-42	HUNTER
	REMOVED H.T. -SR58 NO WT. CHG.		

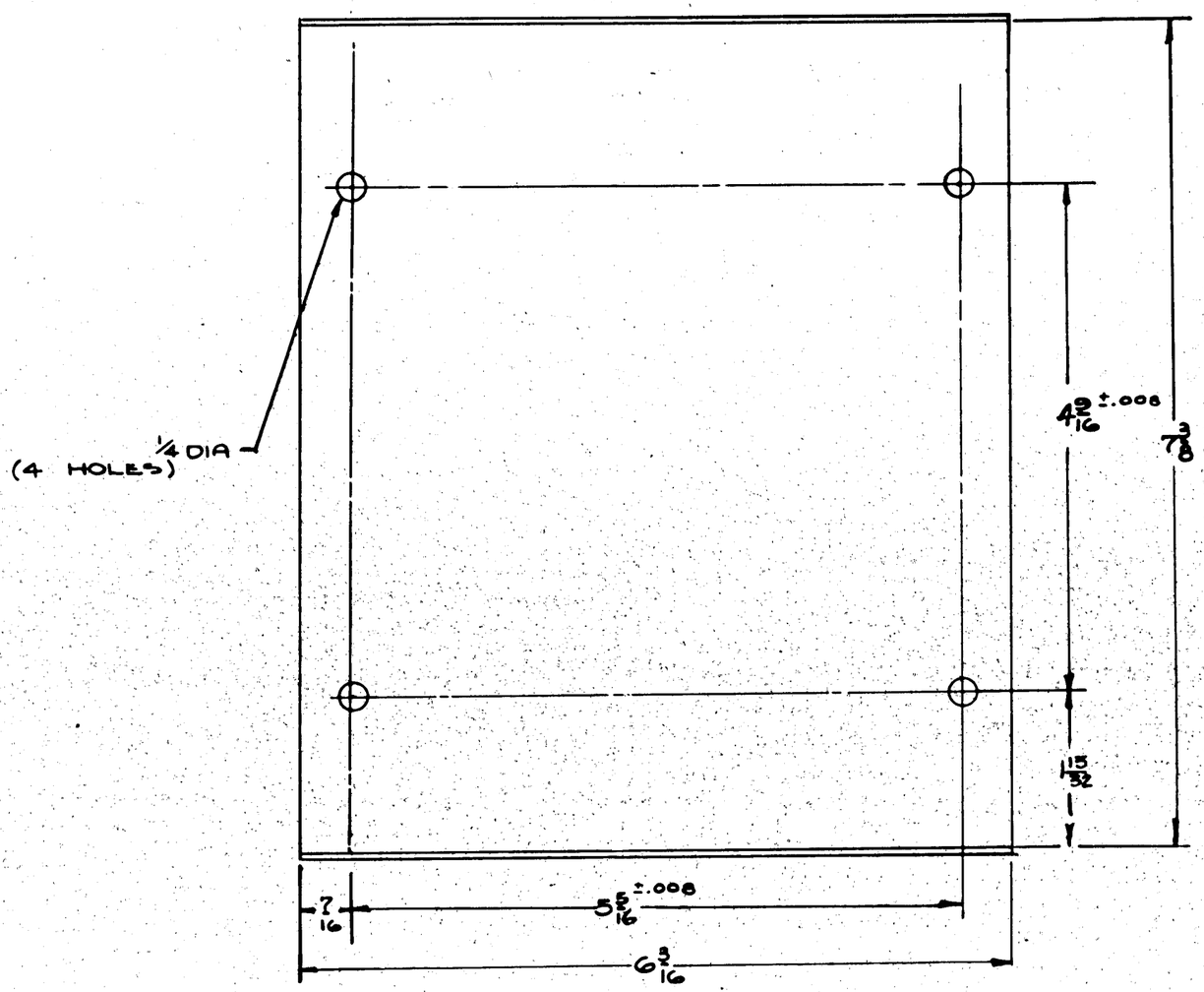

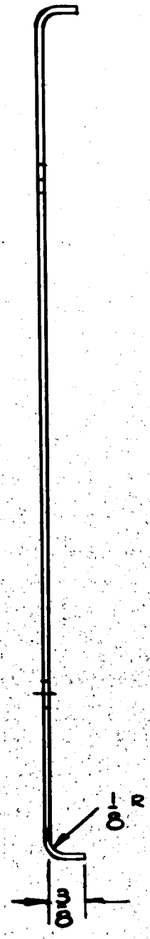

FINISH-
ANODIC TREATMENT
P-27 PRIMER
ALUMINIZED PRIMER

C.91876 #90 (ON
C.88477 #1 TO 150

ASSY. DASH NO.	MODEL	NEXT ASSY.	REQ.
	P2Y-5	28F7070	1
	P2Y-5B	28F7070	1

REQUIREMENTS PER AIRPLANE

REPLACES — CALC WT.

REPLACED BY — ACT. WT.

UNLESS OTHERWISE SPECIFIED: ± 1/32 & NOTED — SCALE 12" = 1'-0"

STAMP PART NUMBER WHERE SHOWN

PART NO.	STOCK	MATERIAL	SPEC.	LH REQ.	RH REQ.	LH REQ.	RH REQ.	LH REQ.	RH REQ.	LH REQ.	RH REQ.	LH REQ.	RH REQ.
	@ .040 x 8½ x 6⅛	ALC 24ST	4TAB-T										
PARTS LIST PER ASSY.				-0		-2		-3		-4		-5	

AC		11-5-41	DRAFT						
NAVY NONE	Z-P-9P	MODIFIED	CHECK	CDG	STRUCT		MAT		ENG.
HEAT TREAT	FINISH								

NAME CHANNEL-FURNS-
CO-PILOT INDICATOR TRAY

OPP. HAND NONE

CONSOLIDATED AIRCRAFT CORP. SAN DIEGO, CALIF.

DWG. SIZE D — 28F7076

R

LET	ALTERATION	DATE	BY

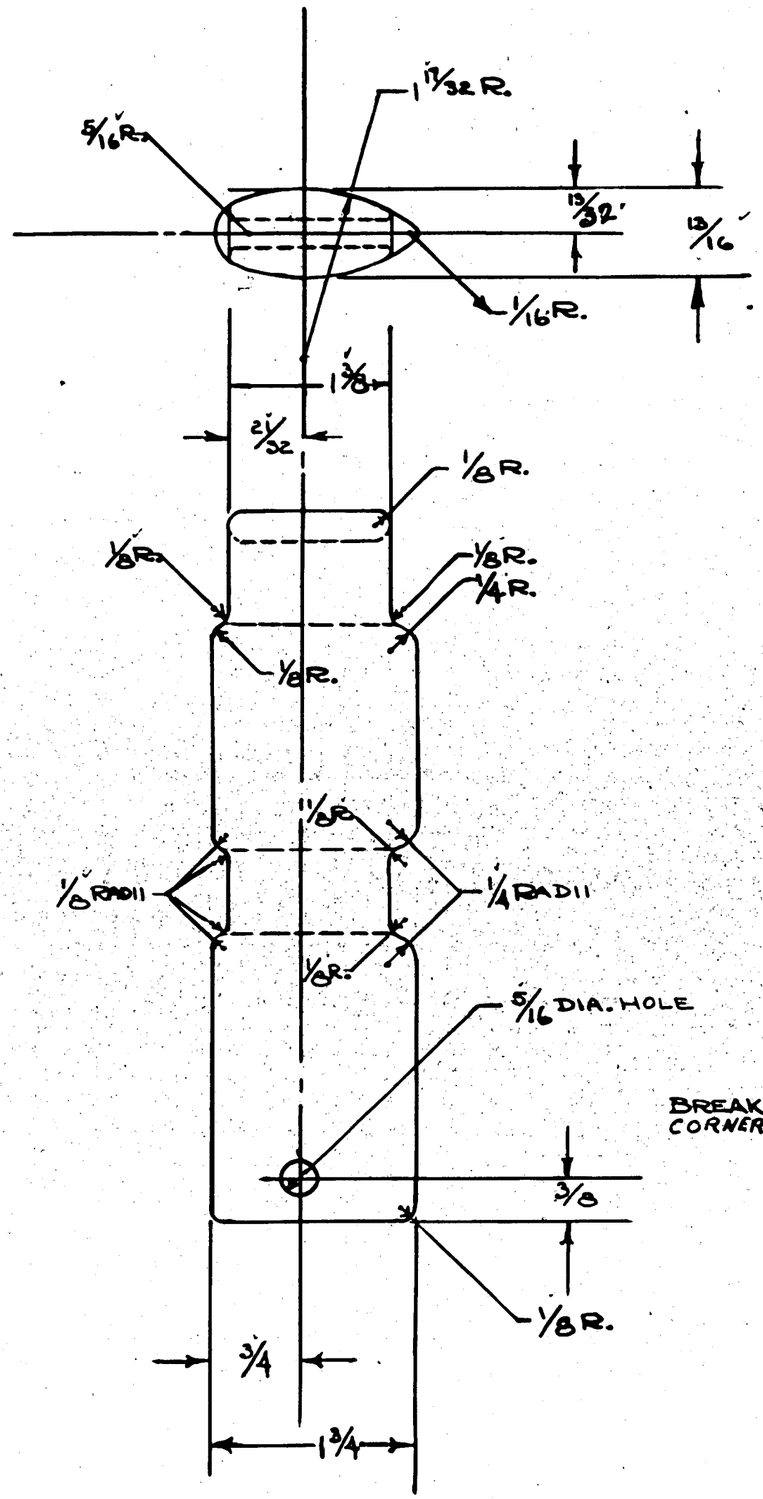

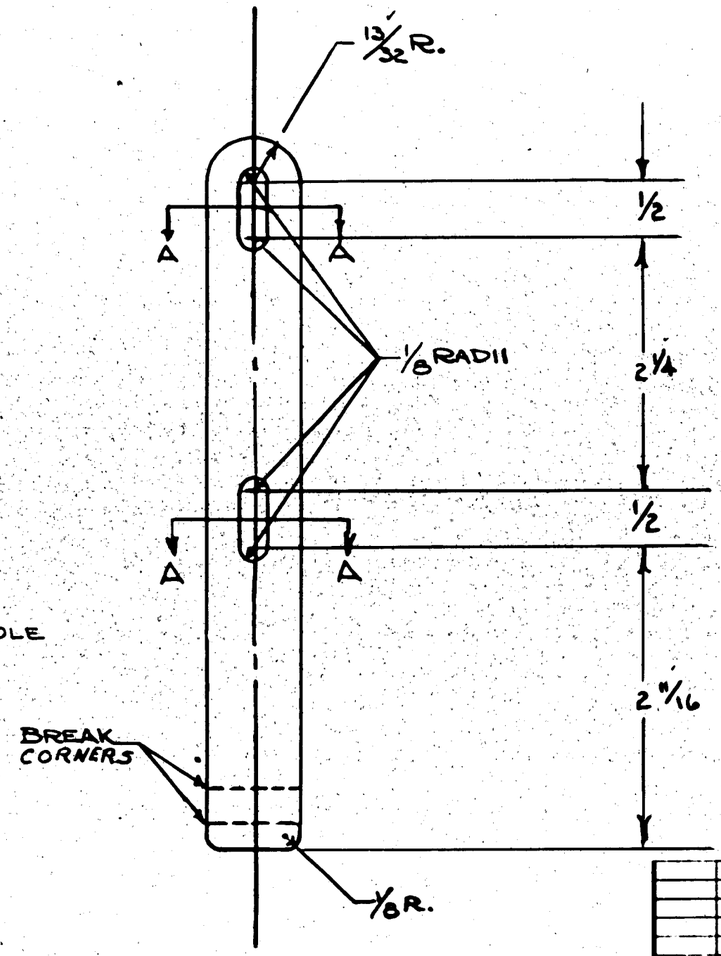

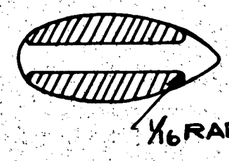

SECTION "A-A"

PURCHASE TO DWG.

ASSY. DASH NO.	MODEL	NEXT ASSY.	REQ.
	P5Y-5B	28F21T2	1

REQUIREMENTS PER AIRPLANE

REPLACES — CALC WT.

REPLACED BY — ACT WT.

LIMIT ON DIMENSIONS UNLESS OTHERWISE SPECIFIED: ± .1/32 — SCALE 12"-1'0"

STAMP PART NUMBER WHERE SHOWN

PART NO	STOCK	MATERIAL	SPEC.	LH REQ.	RH REQ.	LH REQ.	RH REQ.	LH REQ.	RH REQ.	LH REQ.	RH REQ.	LH REQ.	RH REQ.
●	MOLDED	PHENOLIC (FABRIC TYPE)		-0		-2		-3		-4		-5	

PARTS LIST PER ASSY.

A.C.			DRAFT	CHECK	STRUCT	MAT	APPROV	ENG.
NAVY NONE	TWO COATS BAKELITE VARNISH	11-6-41	11-27-41	11-28-41				
HEAT TREAT	FINISH	DRAFT. PASSED						

NAME INSULATOR-FURN'S-
G.F. ANTENNA MAST

OPP. HAND NONE

CONSOLIDATED AIRCRAFT CORP. SAN DIEGO, CALIF.

DWG. SIZE D

28F7096

R

EAA 3046

LET	ALTERATION	DATE	BY
A	ADDED [illegible] CHD. & STOCK SIZE FROM 40-28 TO 30-28. NO WT. CHG.	[illegible]	
B	CHGD MAT'L FROM 20 OZ. WATERPROOF DUCK TO 10 OZ. WATERPROOF DUCK, WT. CHG.	[illegible]	
C	IN B/M ADDED CAC FAB. #6-50 TO MAT'L FOR -6, -7 & -8	[illegible]	

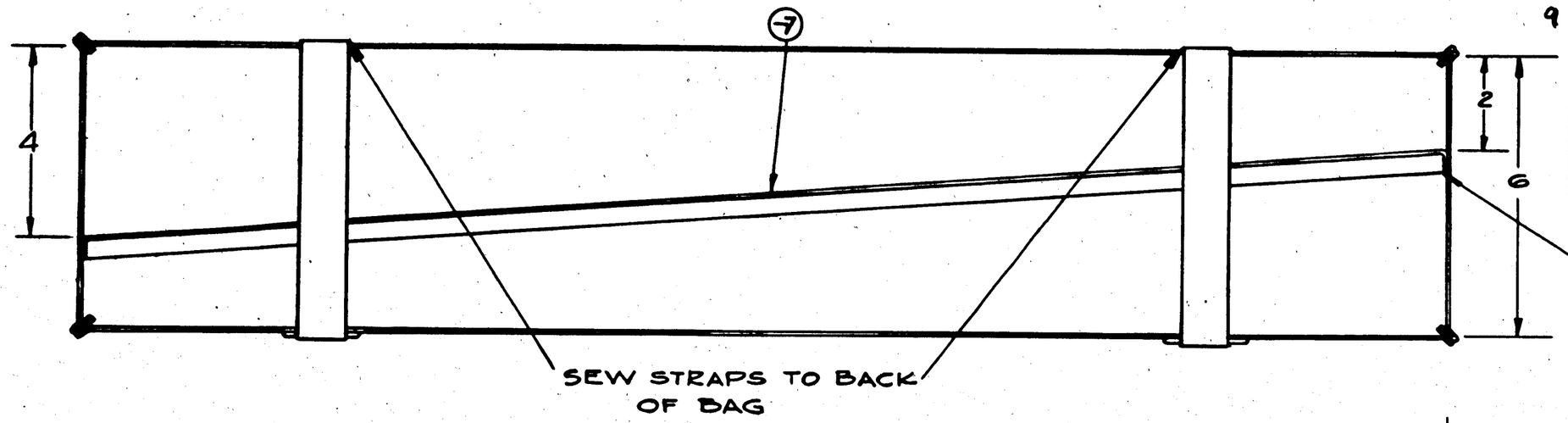

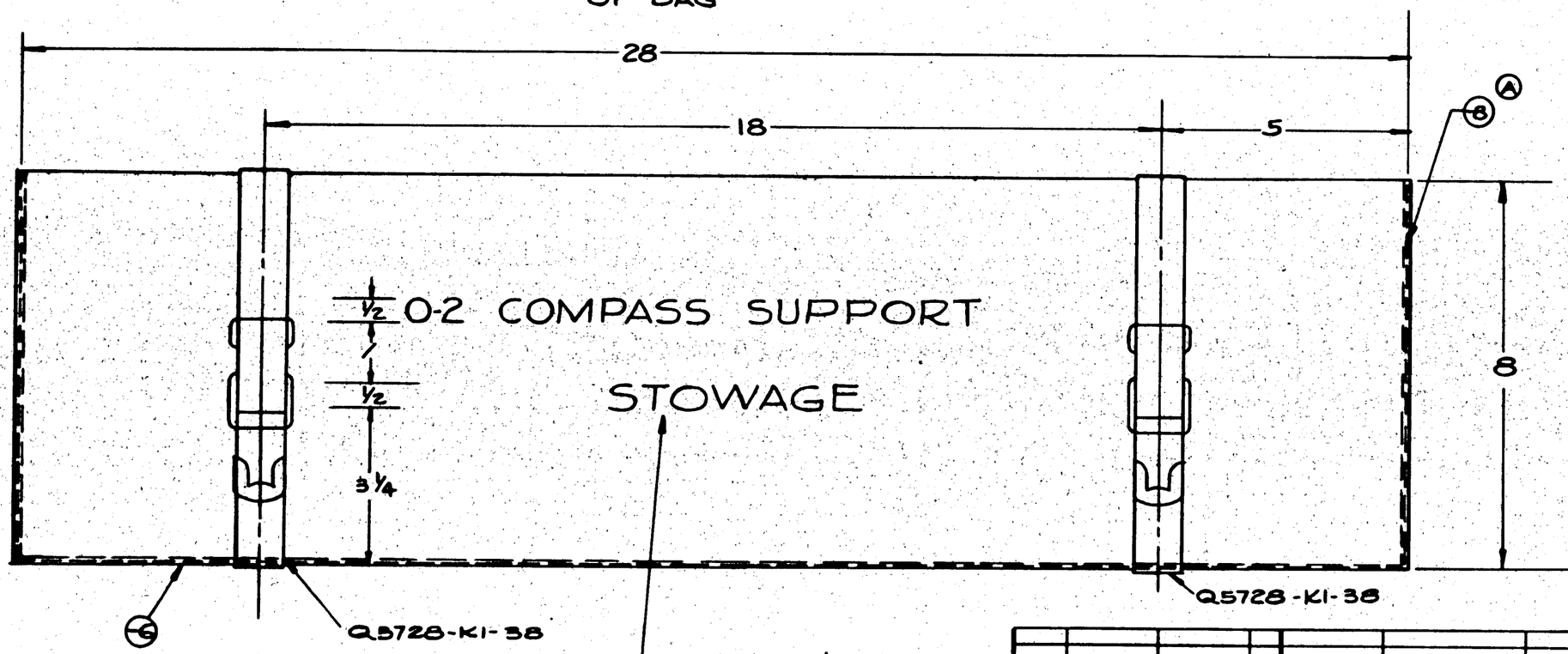

C-91876
C-88476

ASSY. DASH NO.	MODEL	NEXT ASSY.	REQ.
	PBY-5A	28F330-1	1
	PBY-5	28F330-1	1
	PBY-5B	28F330-2	1

REQUIREMENTS PER AIRPLANE

REPLACES

REPLACED BY

CALC. WT.

ASY. WT.

UNLESS OTHERWISE SPECIFIED ± 1/16

SCALE 6"-1'-0"

STAMP PART NUMBER WHERE SHOWN

Q5728-K1-38 2

PART NO.	STOCK	MATERIAL	SPEC.	LH REQ. -0	RH REQ. -2	LH REQ. -3	RH REQ. -4	LH REQ. -5	RH REQ.
-0	6½ x 8½ 8 OZ DUCK CAC FAB 6		24D4	2					
28F7125-7	9 x 29¾		24D4		1				
-8	30 x 26 8 OZ DUCK CAC FAB 6		24D4			1			

PARTS LIST PER ASSY.

AC		11-12-41	11-14-41	GERBER	W.F.S.	J.M.L.	SMITHEY
NAVY NONE	NONE	BAKER	FREEL				
HEAT TREAT	FINISH	DRAFT	CHECK	STRUCT	MAT	APPROV	DNG

NAME BAG-FURN-02-COMPASS SUPPORT STOWAGE

OPP. HAND NONE

CONSOLIDATED AIRCRAFT CORP. SAN DIEGO, CALIF.

SIZE D

28F7125

R

LET	ALTERATION	DATE	BY
A	CHG'D MAT'L FROM AIRFOAM RUBBER TO FOUND HAIR - SPEC FROM COMM. TO AC16122		
	REMOVE NOTE "LAYOUT---"		
	AIRFOAM - YVT CHG. NEG.	5-28-42	HHNES

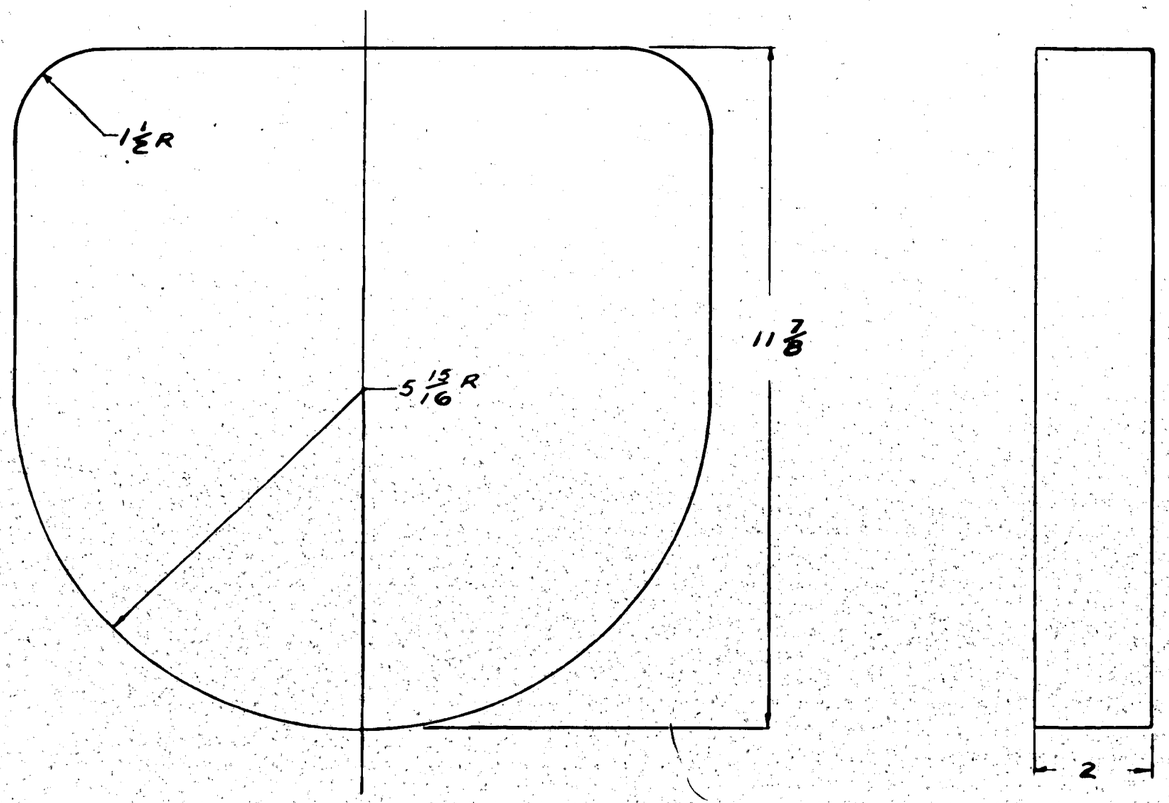

A

PURCHASE TO DWG

ASSY. DASH NO.	MODEL	NEXT ASSY.	SEQ.
	PBY-5A 28F7302		/

REQUIREMENTS PER AIRPLANE

REPLACES	.75 CALC. WT.
REPLACED BY	ACT. WT.
UNLESS OTHERWISE SPECIFIED + 1/8 -	SCALE 6" = 1'-0"

STAMP PART NUMBER WHERE SHOWN

PART No.	STOCK	MATERIAL	SPEC.	LH REQ.	RH REQ.	LH REQ.	RH REQ.	LH REQ.	RH REQ.	LH REQ.	RH REQ.	LH REQ.	RH REQ.
	12 7/8 X 12 1/4	BOUND HAIR	AC16122	-0		-2		-3		-4		-5	

PARTS LIST PER ASSY.

AC ——	——	DRAWN	[illegible]	[illegible]	[illegible]	[illegible]	[illegible]	[illegible]
NAVY NONE	NONE	1-1-42	1-5-42	"	"	[illegible]	[illegible]	[illegible]
HEAT TREAT	FINISH	DRAFT	CHECK	STRUCT	MAT	APPROV	ENG	

NAME CUSHION — FURNS. — NAVIGATOR'S SEAT

OPP. HAND ——

CONSOLIDATED AIRCRAFT CORP. SAN DIEGO, CALIF.

DWG. SIZE D

28F7298

R

LET	ALTERATION	DATE	BY
A	"C.A.C.# FAB-20-25 --- EQUIVALENT"		
	WAS "C.A.C. FAB-20 ----# S-1906Z"		
	WT. CHG. NEG.	12-31-42	
B	Q9901-10 WAS Q9901-8, Q5738-		
	K5 WAS Q5738K6-5. NO WT. CHG.	5-27-43	

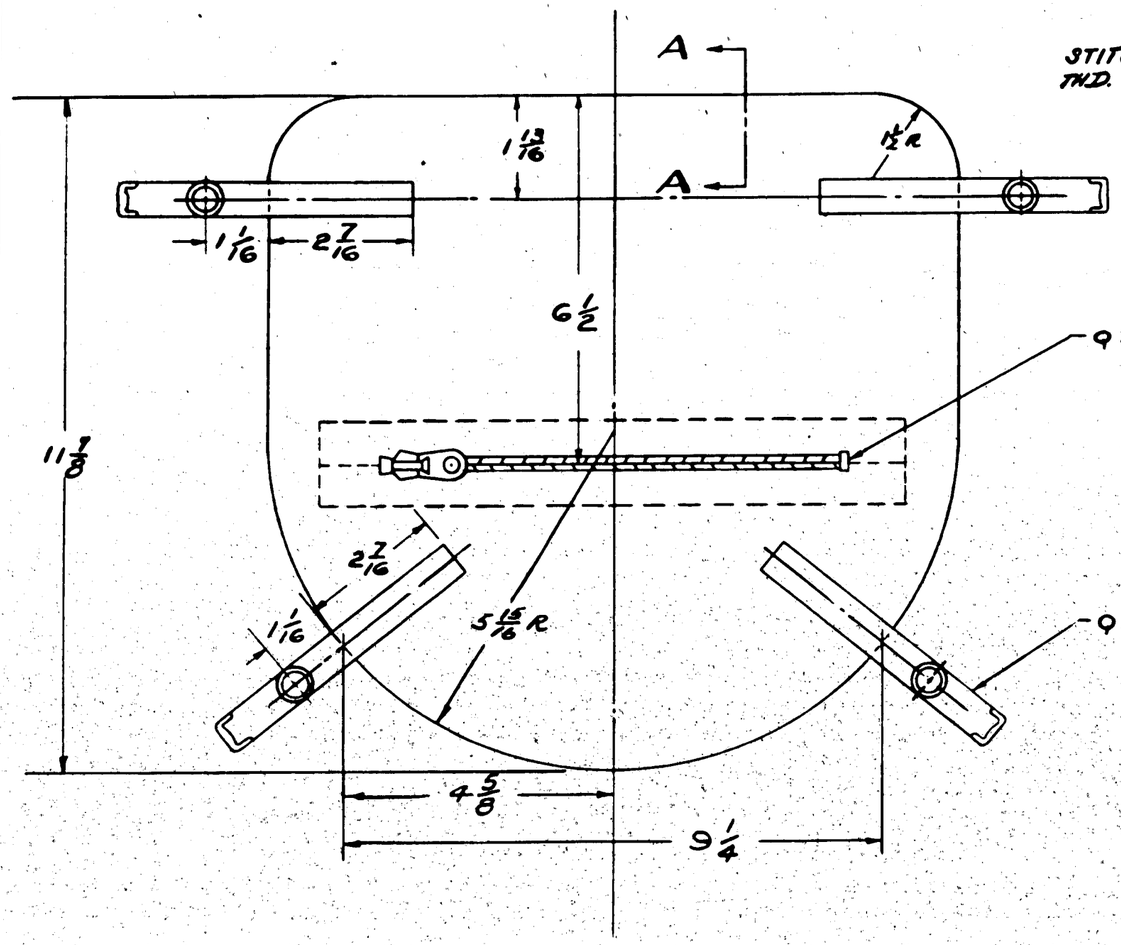

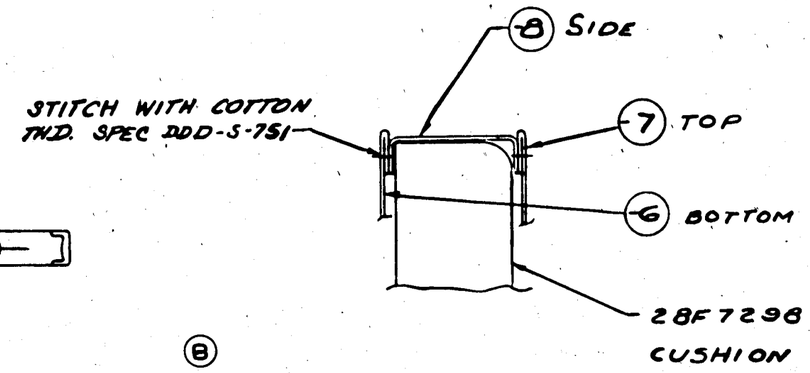

(B) Q9901-10 ZIPPER

SEC. A-A

(B) Q5738-K5 STRAP ASS'Y.

(A)

NOTE:
-6, -7 & -8 MAKE FROM C.A.C.# FAB 20-25, GREEN CANDA CLOTH. 41-160 (VENDOR - COLLINS & AIKMAN, 200 MADISON AVE., N.Y., N.Y.) OR EQUIVALENT.

ASSY. SALES No.	MODEL	NEXT ASSY.	REQ.
C 13595 → -0	PBY-5A	28F6902	1
C.91876 #90 & ON -0	PBY-5	28F6902	1
-0	PBY-5B	28F7002	1

REQUIREMENTS PER AIRPLANE

REPLACES — 1.13# CALC. WT.

REPLACED BY — ADV. WT.

LIMIT DIM. ENGINEERING ANALYSIS OTHERWISE SPECIFIED ± 1/16

SCALE 6" = 1'-0"

STAMP PART NUMBER WHERE SHOWN

PART No.	STOCK	MATERIAL	SPEC.	LH REQ. -0	RH REQ. -0	LH REQ. -2	RH REQ. -2	LH REQ. -3	RH REQ. -3	LH REQ. -4	RH REQ. -4	LH REQ. -5	RH REQ. -5
Q9901-10				1									
Q5738K6					4								
28F7298											1		
-8	3½ x 48	NOTED	NOTED	1									
-7	M 113	"	"		1								
-6	M 113	NOTED	NOTED			1							

PARTS LIST PER ASSY.

AC						
NAVY NONE	NONE	1-1-42	1-5-43			
HEAT TREAT	FINISH	DRAFT	CHECK	STRUCT	M&T	APPROV	ENG.

NAME CUSHION ASSY-FURNS -NAVIGATOR'S SEAT

OPP. HAND —

CONSOLIDATED AIRCRAFT CORP. SAN DIEGO, CALIF.

DWG. SIZE D R

28F7302

LET	ALTERATION	DATE	BY
	ADDED SHIELDING TO VIEW. NO WT. CH'GE.	7-17-43	

LET	ALTERATION	DATE	BY
E	DEP 6991 (2) SHIPS -346 (CONT. WITH -345)	5-11-43	HLAWN
F	ADDED WEIGHT -6 -1.18 -7 -.72	5-11-43	HLAWN
G	IN DETAIL 'B' CH'GED LOCATION OF 3/16 DIM. FOR STRIPPING ℄		

E.O. A48903
E.O. A53755
CR 22148
CR 22152
E.O. A91442

LET	ALTERATION	DATE	BY
A	CREATED -6 & -7 PARTS & ADDED LENGTH DIM. (WT. CHG. +.72)	7-15-43	[illegible]
B	ADDED DETAIL A & B; REMOVED -8, -345 & -5 DIMS. NO WT. CHG.	NOV 8-43	SMITH
C	ON FACE OF DWG. DETAILS A & B ADDED NOTE "FOR CANADIAN CABLE UNIT END" & "FOR CANADIAN OR AMPHENOL CABLE WING UNIT" RESP. IN DET. B ADDED (3/16 DIM. DET'S C, D & E CREATED -0 ASST. CONSISTING OF -6 (1) & AC660-5 (1) & -2 ASST CONSISTING OF -7 (1) & AC660-5 (1) IN REQTS. BUT - ON ASSY - REPLACES -6 & -2 ASSY REPLACES -7. ON FACE & DIM ADDED AC660-51. WT. CH'G NEG.	5-8-43	HLAWN
D	ON FACE OF DWG. BOTTOM R. H CORNER ADDED NOTE "CANADIAN CABLE ——" DETAILS". WT. CHG. NEG.	5-8-43	HLAWN
E	IN SHIPS FOR AIRPLANE -2 PBY-5 & PBY-5A DEP 6991 & DEP 6996, LIMITED CONTR. FOR -0 PBY-5 TO SHIPS 1-345. ADDED -0 PBY-5		

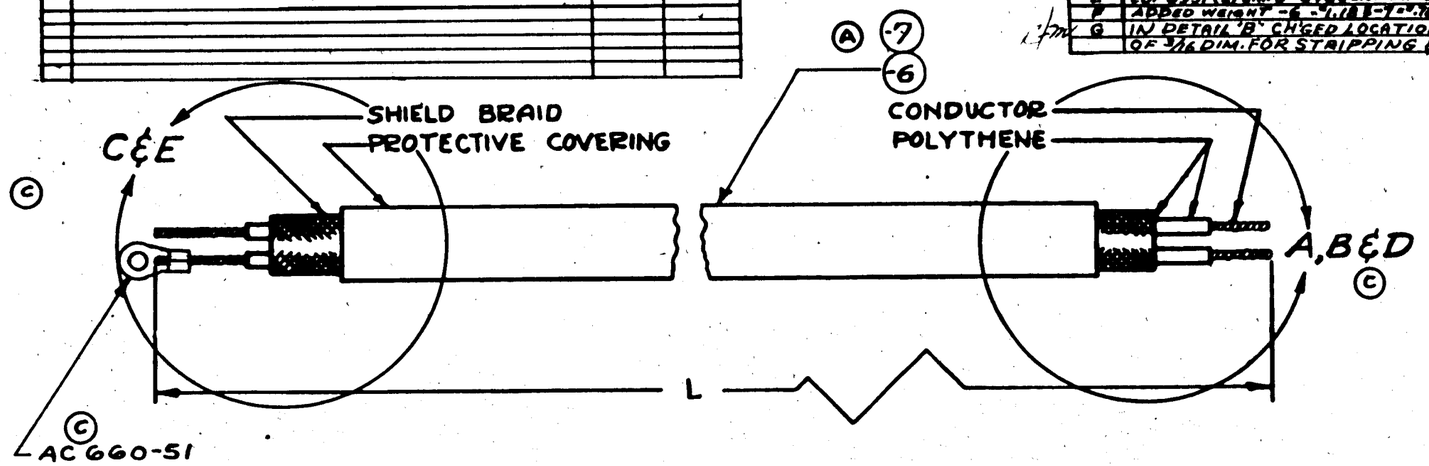

- NOTES -

I. — PERTINENT INFORMATION

(A.) LENGTH OF CABLE WILL BE APPROXIMATE. EXACT LENGTHS FOR EACH "BATCH" WILL BE DETERMINED BY TEST AND SUPPLIED TO SHOP BY RADAR TEST GROUP.

(B.) SINCE THE POLYTHENE INSULATION OF THE CABLE MELTS AT 80°C., TINNING MUST BE DONE QUICKLY WITH A CLEAN HOT IRON TO PREVENT SPOILING THE CABLE.

(C.) CABLE CANNOT BE BENT IN LESS THAN A 10" RADIUS DUE TO "COLD-FLOW" PROPERTIES OF POLYTHENE UNDER COMPRESSION.

(D.) NOTE: IF CABLE INSULATION IS DAMAGED BY HEAT, IF CABLE IS SQUEEZED WITH PLIERS OR VISE, OR IF WIRE IS CUT TOO SHORT, THE CABLE MUST BE REPLACED.

II — PREPARATION OF CABLE:

(A.) AFTER BEING CUT TO LENGTH, THE CABLE SHOULD LIE FLAT FOR 24 HOURS BEFORE ASSEMBLY TO ALLOW THE INSULATION TO CONTRACT, SINCE THIS WILL HAVE STRETCHED SLIGHTLY DUE TO COILING. SEAL CUT ENDS WITH LIQUID POLYSTRENE TO PREVENT MOISTURE ENTRANCE AND WRAP WITH TAPE FOR MECHANICAL PROTECTION UNTIL READY FOR USE.

* CAUTION: - CABLE MUST BE HANDLED WITH GREAT CARE: SQUEEZING CABLE IN VISE WILL DESTROY ELECTRICAL PROPERTIES.

DASH NO.	L
-6	71
-7	43.5

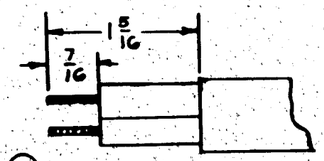

© DETAIL C
FOR CANADIAN CABLE FRANKLIN

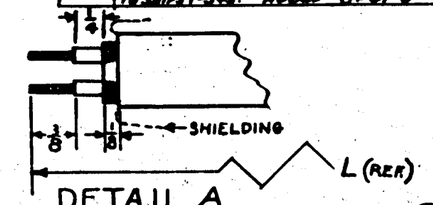

DETAIL A
FOR CANADIAN CABLE UNIT END ©

PREPARE ONE END OF -6 & ONE END OF -7 AS SHOWN, FOR CONNECTION WITH MATCHING UNITS FOLD SHIELDING BACK 3/8.

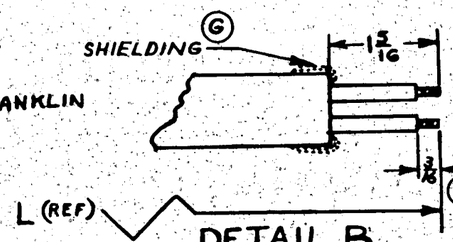

DETAIL B
FOR CANADIAN OR AMPHENOL CABLE WING UNIT ©

PREPARE ONE END OF -7 AS SHOWN, FOR CONNECTION WITH MATCHING STUB. CORRESPONDING END OF -6 SIMILAR, EXCEPT SHIELDING FOLDED BACK ON OUTER INSULATION 5/8.

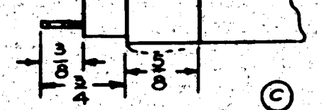

© DETAIL D
FOR AMPHENOL CABLE UNIT END

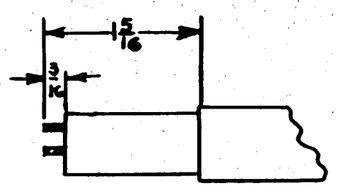

© DETAIL E
FOR AMPHENOL CABLE FRANKLIN

NOTE ⓓ CANADIAN CABLE INTERCHANGEABLE WITH AMERICAN MANUFACTURED CABLE. CONSULT DWG. FOR STRIPPING DETAILS.

C.91876-30 & -34 CON
NOa(B) 464
C.88476-33 CON
C.91876-31 CON
88477
88476
91876
1-345
CUSTOMER INSTALLED ON 52 SHIPS

GOVM'T. FURNISHED EQUIP'T.

DASH NO.	WT.
-6	1.18
-7	.72

RUSH RELEASED 3/16/42

ASSY. DASH No.	MODEL	NEXT ASSY.	REQ'D
-0	PBY-5	28F6991	2
-0	PBY-5A	28F6991	2
-2	PBY-5A	28F6955	2
-2	PBY-5A	28F5496	2
-2	PBY-5	28F6955	2
-0	PBY-5B	28F7320	2
-0	PBY-5A	28F7320	2
-0	PBY-5	28F7320	2

REQUIREMENTS PER AIRPLANE

REPLACES	NOTED CALC. WT.
REPLACED BY	ACT. WT.
± 0.1	SCALE 12" = 1'-0"

STAMP PART NUMBER WHERE SHOWN

PART No.	STOCK	MATERIAL	SPEC.	LH RH REQ. -0	LH RH REQ. -2	LH RH REQ. -3	LH RH REQ. -4	LH RH REQ. -5
AC660-51					2			
-7	BASIC CABLE	X43.5			1			
28F7342-6	BASIC CABLE	X71.5	B	1				

PARTS LIST PER ASSY.

AC —	—	DESIGN						
NAVY —	—				2-23			
HEAT TREAT	FINISH	DRAFT	CHECK	STRUCT	MAT	ASSY	ENG.	

NAME CABLE-FURN.-RECEIVER HOMING ASSAY TO WING MATCHING UNIT

OPP. HAND —

CONSOLIDATED AIRCRAFT CORP. SAN DIEGO, CALIF.

DWG. SIZE D — 28F7342

R 44

EQA55077

LET	ALTERATION	DATE	BY
A	Q5705-K1-6 was Q5705-K1-5(1)		
	NO. WT. CHG.	9-22-42	Brin

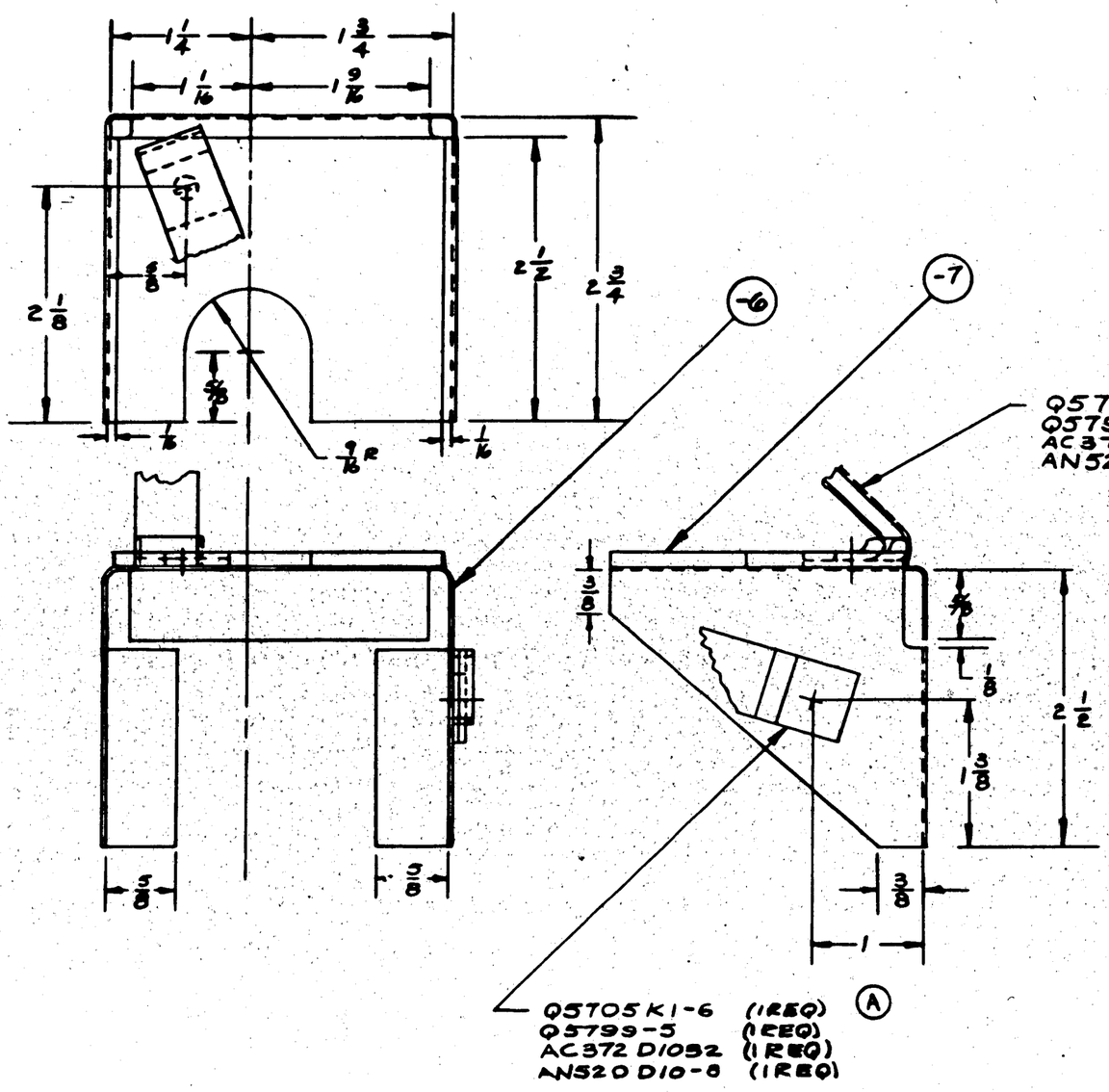

FINISH CODE	
Z	ANODIC TREATMENT
P	P-27 PRIMER
AP	ALUMINIZED PRIMER
C	CADMIUM PLATE

CONT. Nº 88476 -
CONT. Nº 88476 -
CONT. Nº 88477 -

ASSY. DASH NO.	MODEL	NEXT ASSY.	QTY.
	PBY-5	28F7396	1
	PBY-5A	28F7396	1
	PBY-5B	28F7396	1

REQUIREMENTS PER AIRPLANE

REPLACES .13 CALC. WT.

REPLACED BY ACT. WT.

UNLESS OTHERWISE SPECIFIED ± 1/32 SCALE 12" = 1'0"

STAMP PART NUMBER WHERE SHOWN

NOTES:
ATTACH -6 & -7 WITH MINN MINING CEMENT OR EQUIV.

ADJUST ANGLE OF STRAPS AT INSTALLATION

PART No.	STOCK	MATERIAL	SPEC.	LH REQ. -0	RH REQ. -0	LH REQ. -2	RH REQ. -2	LH REQ. -3	RH REQ. -3	LH REQ. -4	RH REQ. -4	LH REQ. -5	RH REQ. -5
	AC372D1032										2		
	AN520D10-8										2		
	Q5745K1-5										1		
	Q5705K1-6										1		
	Q5799-5										2		
-7	1/8 x 2 1/2 x 2 3/8	HYCAR	COMM.								1		
-6	.032 x 3 5/8 x 8 1/2	ALCLAD	47A8-T								1		

PARTS LIST PER ASSY.

AC		LINN	BOLMAN	GERBER		HEAT STRIKING	ZUCK	7/2
NAVY NOTED	Z-P-2GP	6-23-42	TERRELL			7-11-42	WELD	
HEAT TREAT	FINISH	DRAFT	CHECK	STRUCT	MAT	APPROV	ENG.	

NAME BRACKET ASS'Y - STOWAGE MK-2C PELORUS DRIFT SIGHT

CONSOLIDATED AIRCRAFT CORP. SAN DIEGO, CALIF.

OPP. HAND

SIZE D

28F7399

R 7-20-42

LET	ALTERATION	DATE	BY
A	ADDED DASH NO. (-6) FOR EXISTING PART & ADDED -7 TO 1/8 WT. CHG. NEG. 7417-C		

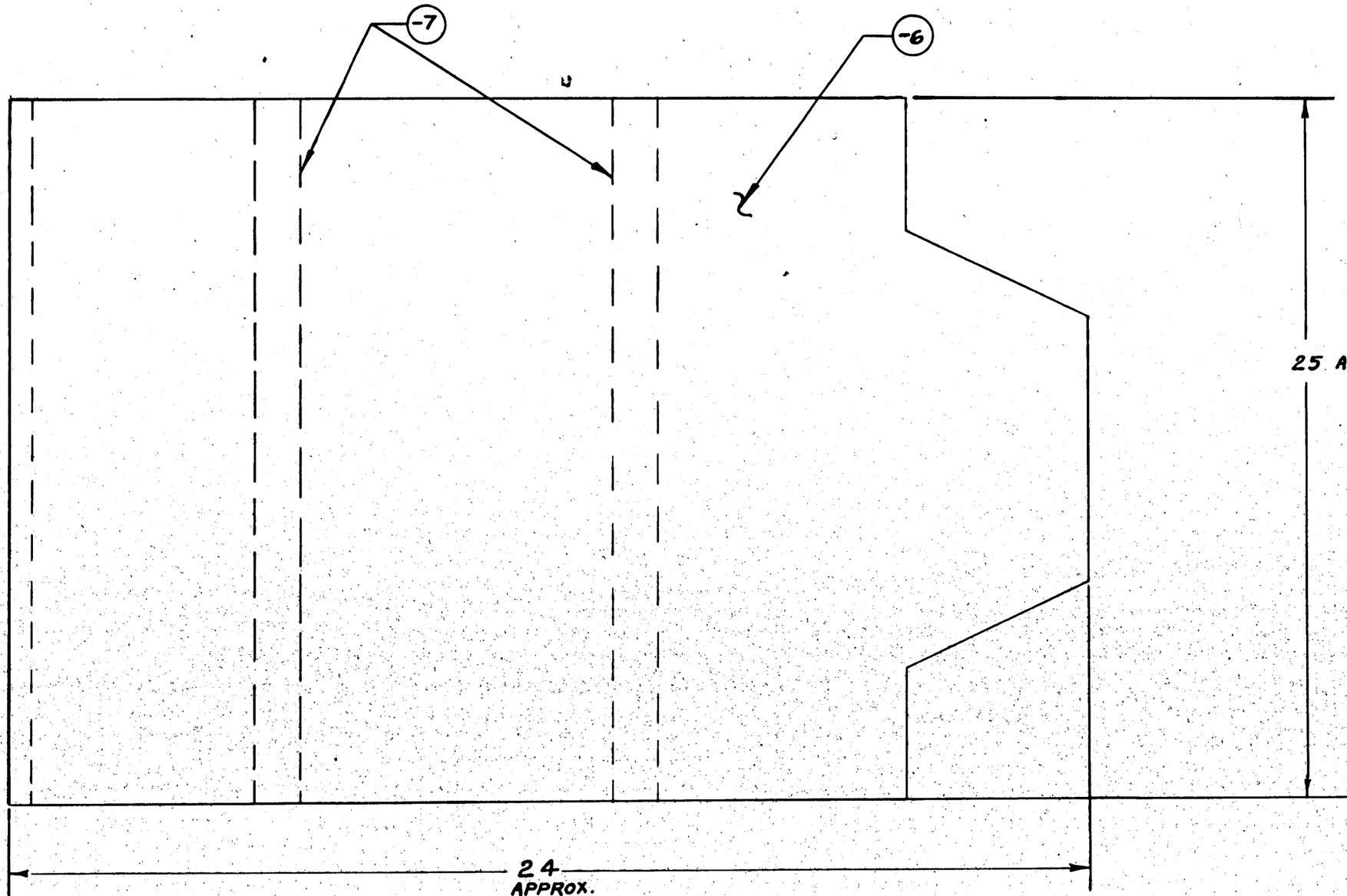

C.AC. CNG 156-3

NOTE:
THIS DWG IS FOR THE PURPOSE OF ASSIGNING A PART NO. & FOR FURNISHING A BILL OF MATERIAL. THIS D'W'G NOT INTENDED AS A WORKING D'WG. PART TO BE FABRICATED & INSPECTED TO A SUITABLE TEMPLATE APPROVED BY TOOL DESIGN.

NOTE: C.A.C.* FAB-60 MAY BE PURCHASED FROM GEO. WOOD SONS & CO. LOS ANGELES, CALIF.

ASSY. DASH NO.	MODEL	NEXT ASSY.	QUAN.
	PBY-5A	28F7501	2
	PBY-5	28F7501	2

REQUIREMENTS PER AIRPLANE

REPLACES — CALC. WT. .0

REPLACED BY — ASY. WT.

UNLESS OTHERWISE SPECIFIED ± 1/8 — SCALE SKETCH

STAMP PART NUMBER WHERE SHOWN

PART NO.	STOCK	MATERIAL	SPEC.	QUAN.	LH REQ.	RH REQ.	LH REQ.	RH REQ.	LH REQ.	RH REQ.	LH REQ.	RH REQ.	LH REQ.	RH REQ.
-7	1¾ x 25½	CAC* FAB 60		2										
-6	26 x 25½	CAC* FAB 60		1										
PARTS LIST PER ASSY.					-0		-2		-3		-4		-5	

A.C.		DESIGN	GARROW				
NAVY	—						
HEAT TREAT	FINISH	DRAFT	CHECK	STRUCT	MAT	APPROV	ENG.
		11-9-42					

NAME COVERING-FURNS-ASV INDICATOR-VISOR

OPP. HAND NONE

CONSOLIDATED AIRCRAFT CORP. SAN DIEGO, CALIF.

DWG. SIZE D — 28F7502

R

LET	ALTERATION	DATE	BY

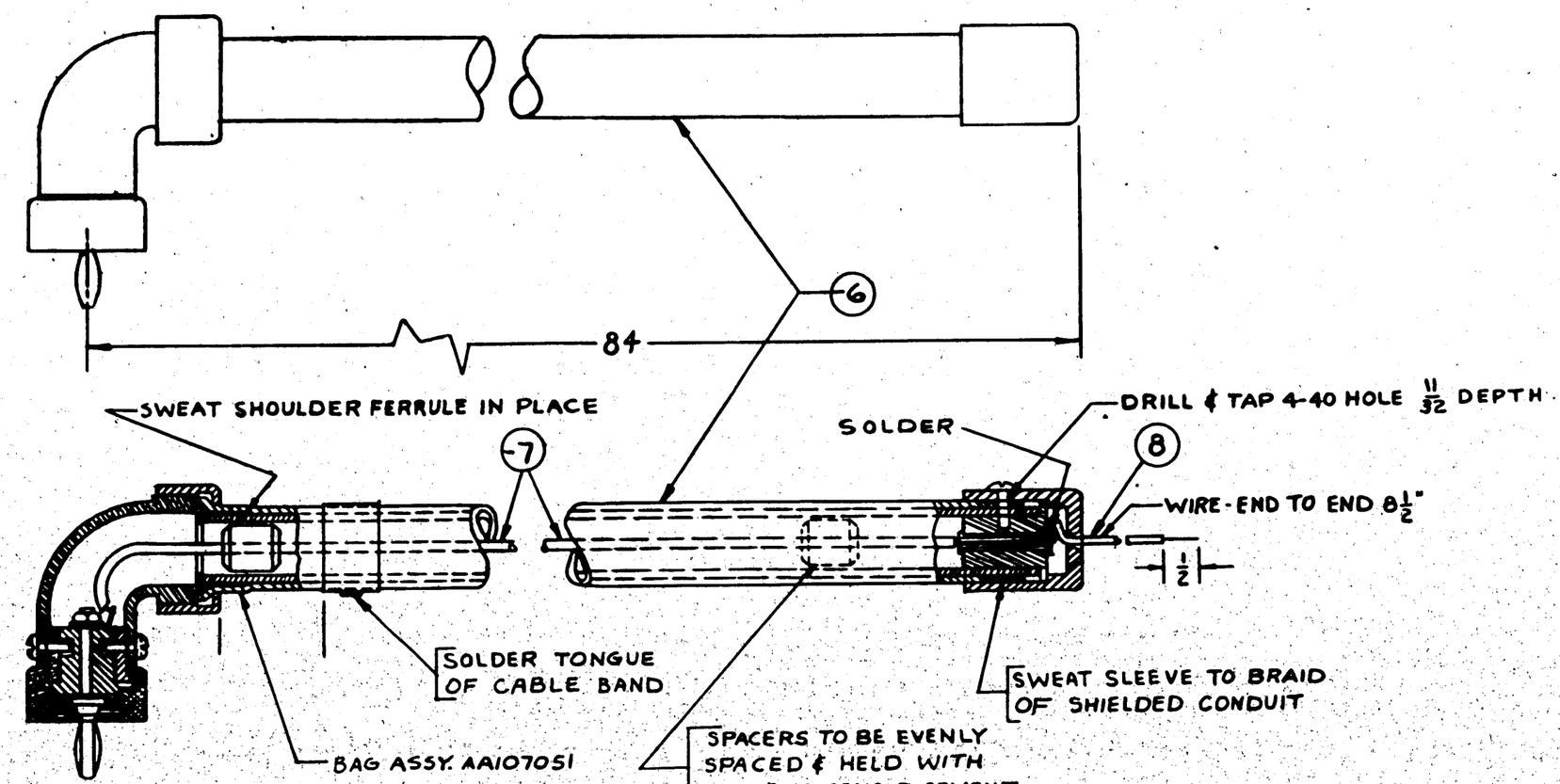

* DENOTES GOV. FURN. MATERIAL

C.A.C. # CA.71X9 MAY BE PURCHASED FROM CORNISH WIRE CO. PATTERSON, NEW JERSEY.

NOTE: FOR DETAIL SPEC. ON ASSY. SEE SPEC. BS-104A AS FURN. WITH AA107051

M.C. #151-1-5

ASSY. DASH NO.	MODEL	NEXT ASSY.	REQ.
	PBY-5	28F6955	1

REQUIREMENTS PER AIRPLANE

REPLACES — CALC. WT. 1.40

REPLACED BY — ACT. WT.

SCALE SKETCH

± 1/32

STAMP PART NUMBER WHERE SHOWN

PART NO.	STOCK	MATERIAL	SPEC.	LH REQ. -0	RH REQ. -2	LH REQ. -3	RH REQ. -4	LH REQ. -5	RH REQ.
AA107051	BAG ASSY. *			1					
-2	C.A.C. # CA.71X9			1					
* -7	C591588-15			1					
* -6	C591588-16	SHIELDED CONDUIT		1					

PARTS LIST PER ASSY.

A.C.

NAVY NONE — NONE

HEAT TREAT — FINISH

Fink. Gold Bulk

11-26-42 Traced — J — DRAFT — CHECK — STRUCT — MAT — APPRO. — ENG

NAME CABLE-FURNS-A.R.B. RECEIVING ANTENNA TO D.W

OPP HAND

CONSOLIDATED AIRCRAFT CORP. W+ SAN DIEGO, CALIF.

DWG. SIZE D — 28F7506

R

LET	ALTERATION	DATE	BY

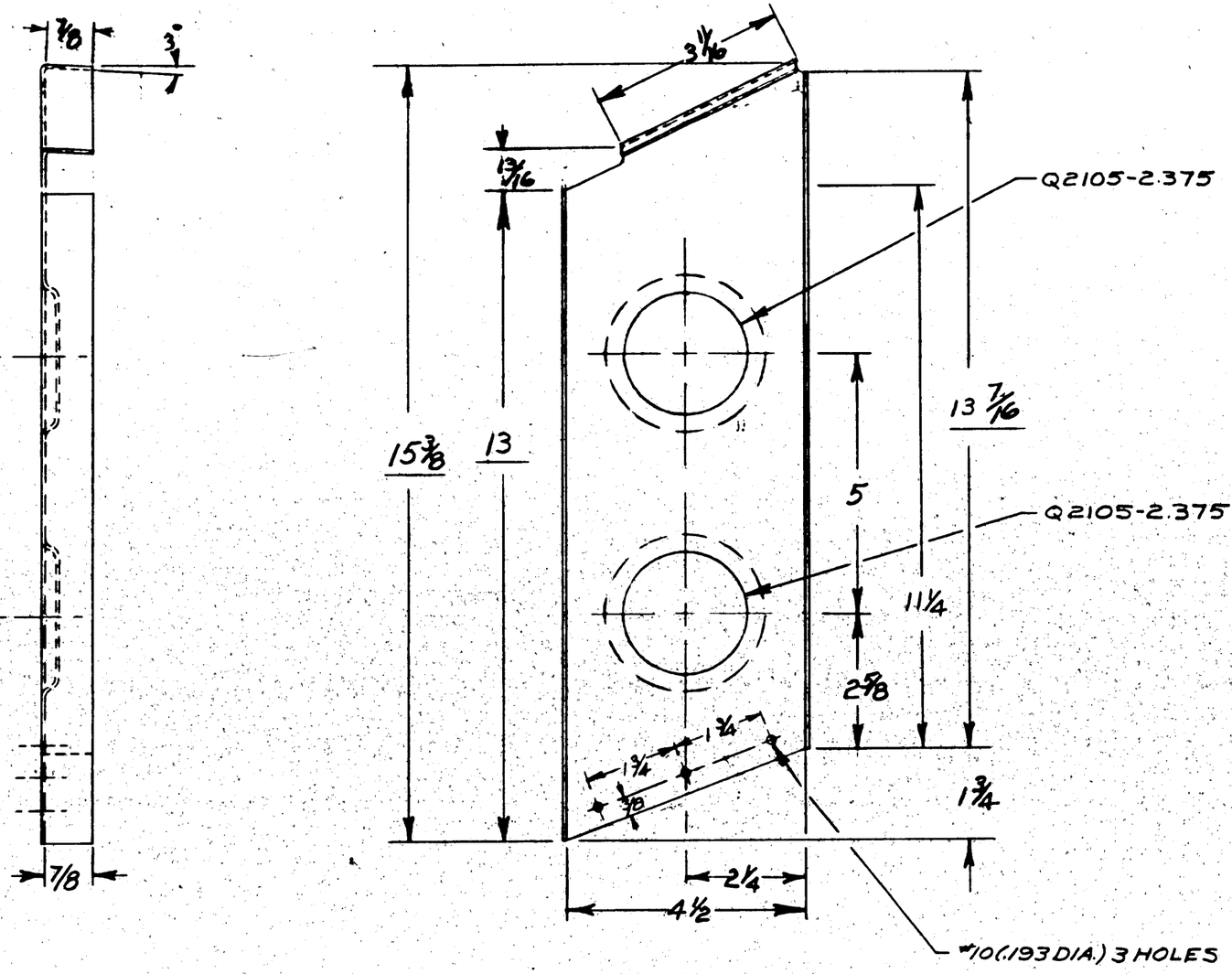

MC 156-4

APPROVED FOR TOOLING BY
P.B. Humphreys 1-14-43

PBY-5A 28F7510 1

ASSY. DASH NO.	MODEL	NEXT ASSY.	REQ.

REQUIREMENTS PER AIRPLANE

REPLACES — CALC. WT. .46

REPLACED BY — ACT. WT.

± 1/32 — SCALE 6"=1'0"

STAMP PART NUMBER WHERE SHOWN

PART NO.	STOCK	MATERIAL	SPEC.	LH REQ. -0	RH REQ. -0	LH REQ. -2	RH REQ. -2	LH REQ. -3	RH REQ. -3	LH REQ. -4	RH REQ. -4	LH REQ. -5	RH REQ. -5
	.051 x 16 x 6 3/8	ALCLAD	41AB-T										

PARTS LIST PER ASSY.

AC — NAVY NONE — HEAT TREAT — Z-P-GP1 — FINISH

DRAFT — CHECK — STRUCT — MAT — APPROV — ENG.

NAME CENTER BRACE-FURN-ASV INDICATOR

OPP. HAND NONE

CONSOLIDATED AIRCRAFT CORP. SAN DIEGO, CALIF.

SIZE D — 28F7510

LET	ALTERATION	DATE	BY

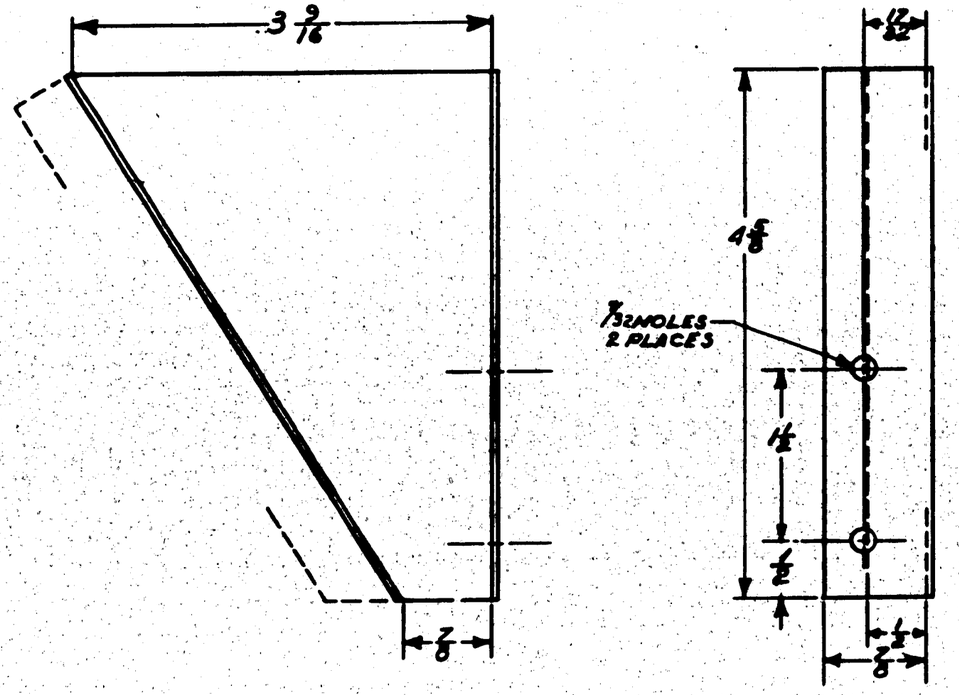

MCR 156

APPROVED FOR
TOOLING BY
R.B. Humphreys 1-16-43

ASSY. DWG. NO.	MODEL	NEXT ASSY.	QUAN.
REQUIREMENTS PER AIRPLANE			
REPLACES		.07 GAGE TH.	
REPLACED BY		ASS. QTY.	
CHK'D DIMENSIONS PRIOR TO ORDERING	SCALE 12"=1'0"		
7/32			

PART No.	STOCK	MATERIAL	SPEC.	LH REQ.	RH REQ.	LH REQ.	RH REQ.	LH REQ.	RH REQ.	LH REQ.	RH REQ.	LH REQ.	RH REQ.
	4-040X4"X3 1/2	ALCLAD	24S-T										
PARTS LIST PER ASSY.				-0		-2		-3		-4		-5	

AC			DRAFT	CHECK	STRUCT.	MAT	APPROV	ENG.
NAVY NONE	2-P-GP							
HEAT TREAT	FINISH							

NAME BRACE - FURNS - ACCUMULATOR SUPPORT

CONSOLIDATED AIRCRAFT CORP., San Diego, Calif.

OPP. HAND

SIZE D

28F7523

R

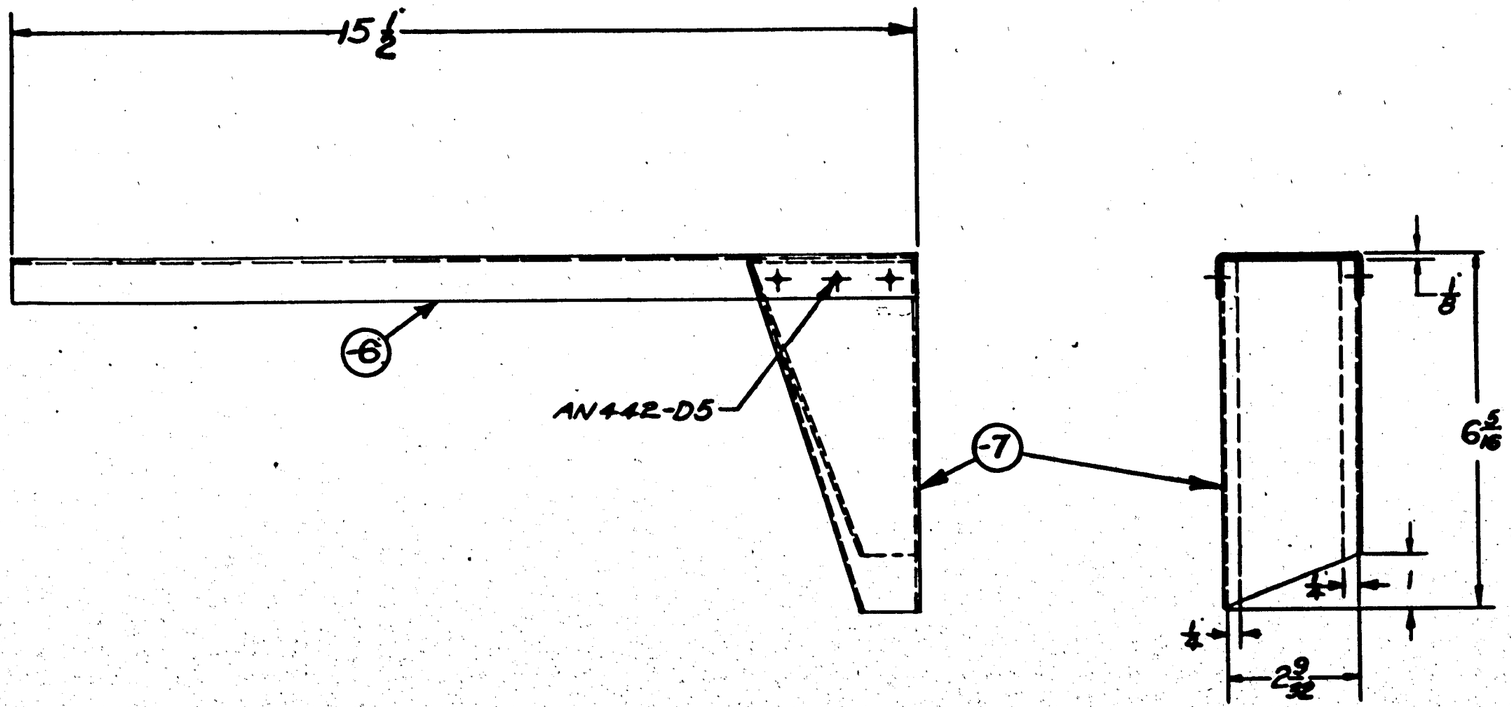

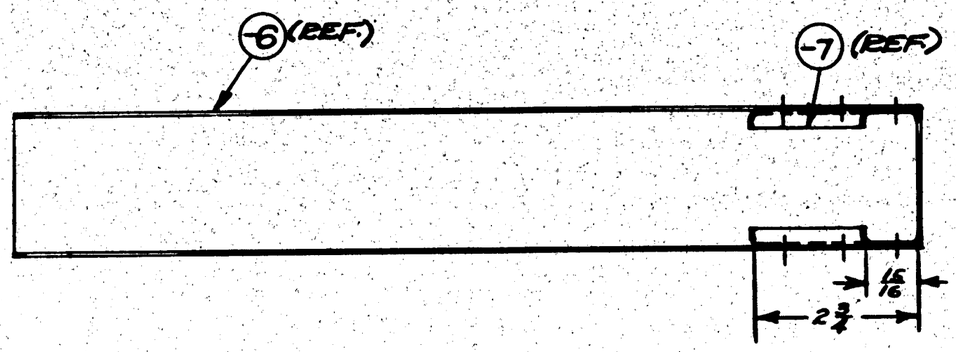

M.C.R. #152-A

APPROVED FOR TOOLING BY— V. BROWN 8-19-43

MODEL	PBY-5A (PBF-2)	NEXT ASSY.	
REQUIREMENTS PER AIRPLANE			
REPLACED 28F7538 OF 1-13-43		QUAN. PER.	47
REPLACED BY		ASY. QTY.	
LIST OF EQUIPMENT UNLESS OTHERWISE SPECIFIED	1/32	SCALE	6"=1'0"
STANDARD PARTS NUMBERS WHERE SHOWN			

AN442-D5

PART No.	STOCK	MATERIAL	SPEC.	LH REQ. -0	RH REQ. -2	LH REQ. -3	RH REQ. -4	LH REQ. -5	RH REQ.
PARTS LIST PER ASSY.									
-7	.051 x 8 5/8 x 6 3/16	ALCLAD	QQ-A-362-K	1					
-6	Y10A-110T x 15 5/8					1			

AC								
NAVY NONE	Z-P-GP	8-11-43	8-11-43			8-26-43		
HEAT TREAT	FINISH	DRAFT	DESIGN	STRUCT	MAT	APPROV	ENGR.	

NAME SUPPORT-FUENS-FOOD LOCKER

OPP. HAND NONE

CONSOLIDATED AIRCRAFT CORP. San Diego, Calif.

DWG. D

28F7536

R

LET	ALTERATION	DATE	BY
A	REDESIGNED (REDRAWN)	[illegible]	[illegible]

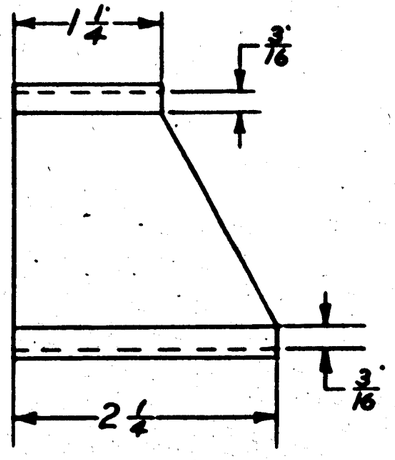

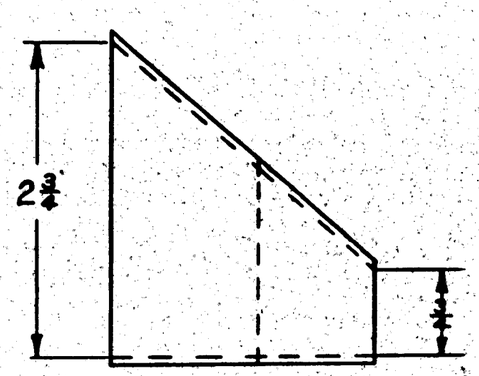

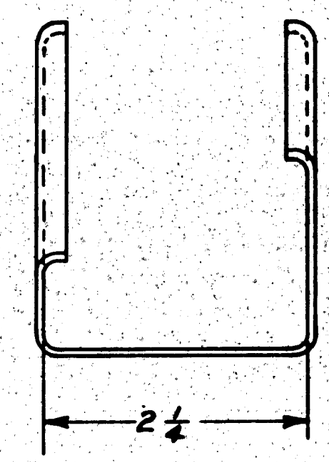

MCR-152-A

APPROVED FOR TOOLING BY V Braun 3-19-43

ASSY. SALES NO.	MODEL	NEXT ASSY.	QTY.
	PBY-5A	28F7527	1

REQUIREMENTS PER AIRPLANE

REPLACED	CAUG. WT.
28F7539 of 1-13-43	.12
REPLACED BY	ADV. WT.

SCALE	STAMP PART NUMBER WHERE SHOWN
12" = 1'-0"	

PART No.	STOCK	MATERIAL	SPEC.	LH REQ.	RH REQ.	LH REQ.	RH REQ.	LH REQ.	RH REQ.	LH REQ.	RH REQ.	LH REQ.	RH REQ.
	.064X2¼X5½	ALCLAD	24-A-32-S										
PARTS LIST PER ASSY.				-0		-2		-3		-4		-5	

A/C		INTCHG.					
NAVY NONE	Z-P-GP	3-11-43	3-11-43		3-20-43		
HEAT TREAT	FINISH	DRAFT	CHECK	STRUCT	MAT	APPROV	

NAME CORNER SUPPORT - FURNS - FOOD LOCKER

OPP. HAND NONE

CONSOLIDATED AIRCRAFT CORP. San Diego, Calif.

DWG. D 28F7539

R

LET	ALTERATION	DATE	BY
A	SPEC NO 00A362 TYPE		
	W WAS 47A8T (NO WT CHG)	FEB 1943	
B	DIM 4½ WAS 4 9/32 (NO WT CHG)	FEB 1943	

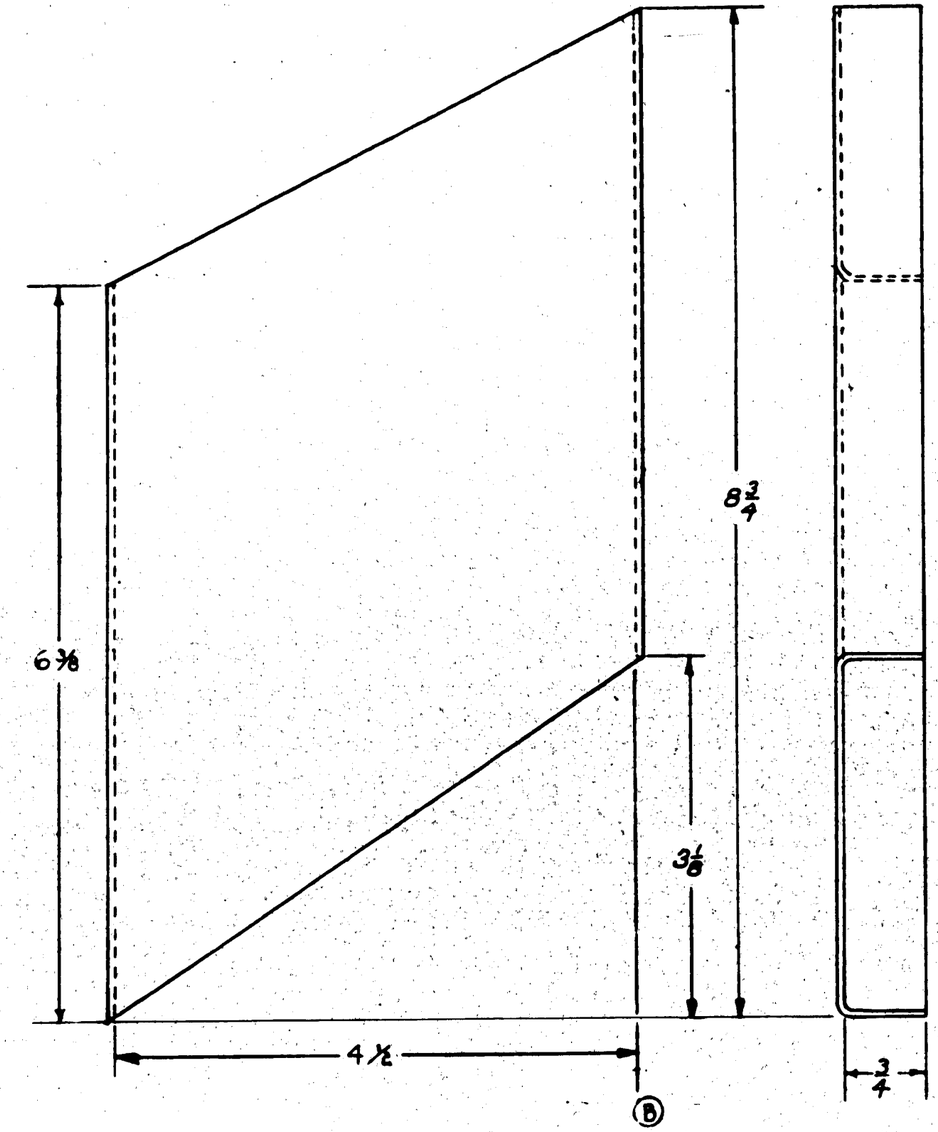

ASSY. DASH NO.	MODEL	PART ASSY.	REQ'D.
	P2V-5A	28F7518	1

REQUIREMENTS PER AIRPLANE

REPLACES	.22 CALC. WT.
REPLACED BY	ACT. WT.
SCALE	12" = 1'-0"

STAMP PART NUMBER WHERE SHOWN

PART NO.	STOCK	MATERIAL	SPEC.	LH REQ'D.	RH REQ'D.	LH REQ'D.	RH REQ'D.	LH REQ'D.	RH REQ'D.	LH REQ'D.	RH REQ'D.
PARTS LIST PER ASSY.	.051 x 6 3/8 x 8 3/4	ALCLAD	QQ-A-362 TYPE II	-0		-2		-3		-4	-5

AC		MICHELS					
NAVY NONE	E-P-GP	1-16-43					
HEAT TREAT	FINISH	DRAFT	CHECK	ENGR.	MAT	APPROV.	ENGR.

NAME SUPPORT-FURNS.-ASY.-INDICATOR-AFT END

OPP. HAND NONE

CONSOLIDATED AIRCRAFT CORP. SAN DIEGO, CALIF.

DWG. SIZE D

28F7541

APPROVED FOR TOOLING BY R B Humphreys 1-14-43

R'10-43

28F7541

LET	ALTERATION	DATE	BY

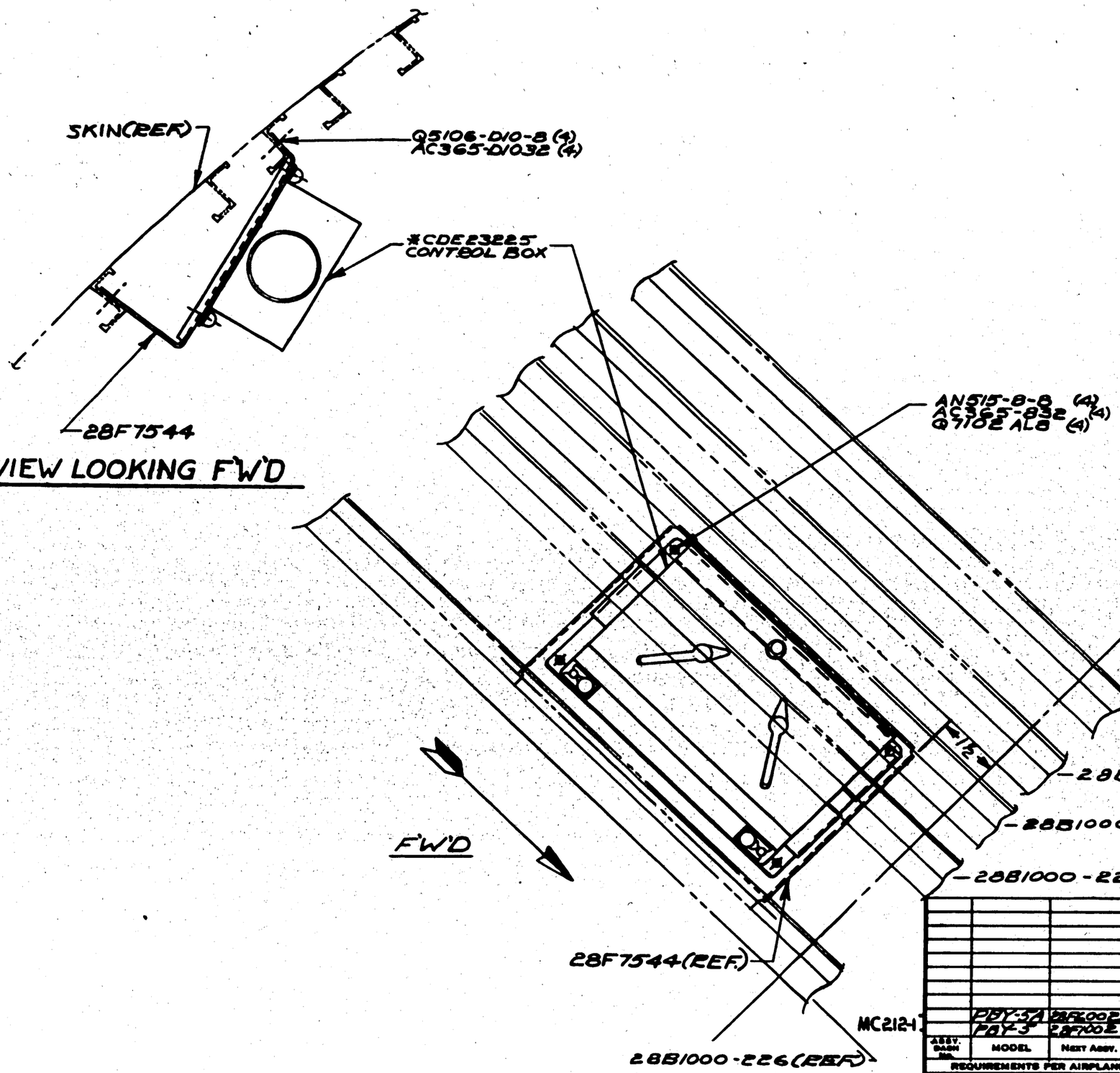

VIEW LOOKING F'W'D

VIEW LOOKING OUT B'D

APPROVED FOR TOOLING BY V. Brown 2-5-43

ASSY. DASH No.	MODEL	NEXT ASSY.	QTY.
	PBY-5A	28F1002	1
	PBY-5	28F1002	1

REQUIREMENTS PER AIRPLANE

REPLACES

REPLACED BY

208 CHG. NO.

ASS'Y. NO.

SCALE 6" = 1'0"

STAMP PART NUMBER WHERE SHOWN

PART No.	STOCK	MATERIAL	SPEC.	LH REQ.	RH REQ.	LH REQ.	RH REQ.	LH REQ.	RH REQ.	LH REQ.	RH REQ.	LH REQ.	RH REQ.
*CDE28225 CONTROL BOX				1									
AN515-8-8				4									
Q7102 AL8					4								
Q5106-D10-8					4								
AC365-D1032				4									
AC365-832					4								
28F7544				1									
				-0	-2	-3	-4	-5					

PARTS LIST PER ASSY.

AC

NAVY NONE

HEAT TREAT

NONE

FINISH

DRAFT	CHECK	STRUCT	MAT	APPROV	ENG.
1-25-43					

NAME INSTALL-FURNS-ZA CONTROL BOX & BR'K T

OPP. HAND NONE

CONSOLIDATED AIRCRAFT CORP. WHO SAN DIEGO, CALIF.

SIZE D

28F7543

R 8-11-43

LET	ALTERATION	DATE	BY

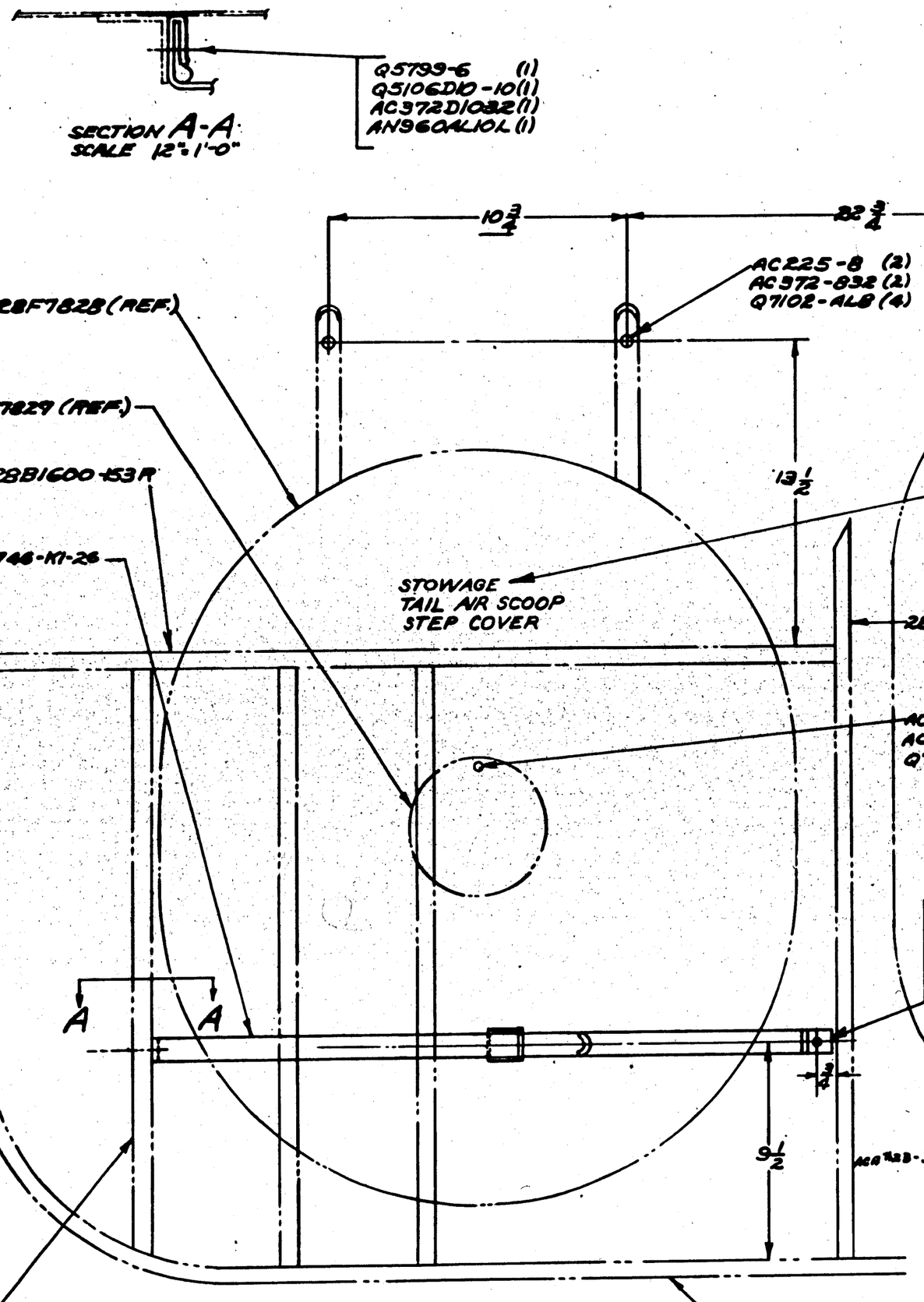

VIEW STARBOARD SIDE LOOKING AFT BULKHEAD #6

APPROVED FOR
TOOLING BY
V BROWN 3-12-43

ASSY. BASIC NO.	MODEL	NEXT ASSY.	QUAN.
	B8Y-5	28F7002	1

REQUIREMENTS PER AIRPLANE

REPLACES — .2# CALC. WT.

REPLACED BY — ADV. WT.

UNLESS OTHERWISE SPECIFIED ± 1/32 — SCALE 3"=1'-0"

STAMP PART NUMBER WHERE SHOWN

PART No.	STOCK	MATERIAL	SPEC.	LH REQ.	RH REQ.	LH REQ.	RH REQ.	LH REQ.	RH REQ.	LH REQ.	RH REQ.	LH REQ.	RH REQ.
AN960AL10L				2	2								
AC372D1032				2	2								
Q5106D10-10				1	1								
Q5706-K1-10				2	2								
Q5746-K1-26				6	6								
Q5799-6				3	3								
Q7102-AL8				8	8								
AC372-832													
AC225-8													

PARTS LIST PER ASSY. -0 -2 -3 -4 -5

AC						
NAVY NONE	NONE	3-16-43	3-16-43	"	4-1-43	
HEAT TREAT	FINISH	DRAFT	CHECK	STRUCT	MAT	APPROV	ENG.

NAME STOWAGE - FURNISHINGS - TAIL SCOOP & STEP COVER

CONSOLIDATED AIRCRAFT CORP. SAN DIEGO, CALIF.

OPP. HAND

SIZE D

28F7546

LET	ALTERATION	DATE	BY
A	IN B/M. MAT. & SPEC. "NOTED" WERE "PLYWOOD: AN-NN-P-511 TY. III." TO FACE ADDED MAT. NOTE #1. NO WT. CHG	9-11-43	

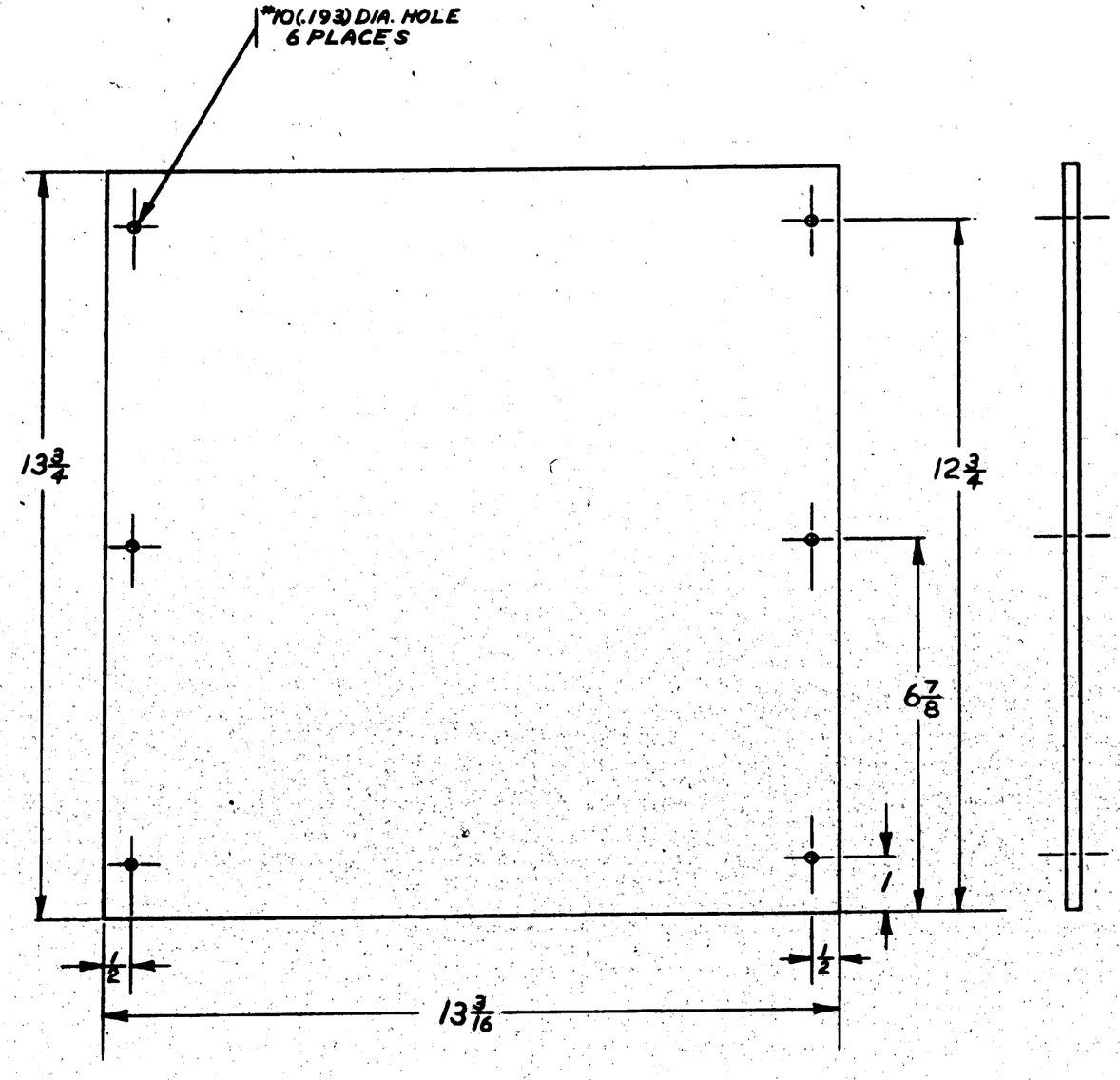

MATERIAL NOTE
1.- MAT. MAY BE
(A).- PLYWOOD, SPEC. AN-NN-P-511, TYPE III, OR
(B). PLYWOOD, SPEC, AN-NN-P-511, TYPE II.

M.C.R. 152-A

FINISH NOTE
APPLY 1 COAT WATERPROOF SEALER (ANDREW BROWN CO. L-60 OR EQUIV.)
APPLY 2 COATS WATERPROOF LACQUER (ANDREW BROWN CO. #33 OR EQUIVALENT.)

APPROVED FOR TOOLING BY
V. Brown 3-19-43

ASSY. DASH NO.	MODEL	NEXT ASSY.	REQ.
	PBY-5A	28F7554	1

REQUIREMENTS PER AIRPLANE

REPLACES	.75# CALC. WT.
REPLACED BY	ACT. WT.
UNLESS OTHERWISE SPECIFIED ± 1/32	SCALE 6"=1'-0"

STAMP PART NUMBER WHERE SHOWN

PART NO.	STOCK	MATERIAL	SPEC.	LH REQ.	RH REQ.	LH REQ.	RH REQ.	LH REQ.	RH REQ.	LH REQ.	RH REQ.	LH REQ.	RH REQ.
	1/4 X 13 3/8 X 13 7/8	NOTED	NOTED	-0		-2		-3		-4		-5	

PARTS LIST PER ASSY.

AC									
NAVY NONE	NOTED	SKETCH 2-75-43	S.L. 5-6-43						
HEAT TREAT	FINISH	DRAFT	CHECK	STRUCT	MAT	APPROV	ENG.		

NAME SHELF-FURNS.-FOOD LOCKER
OPP. HAND NONE
CONSOLIDATED AIRCRAFT CORP. SAN DIEGO, CALIF.
DWG. SIZE D
28F7552

R 28F7552

LET	ALTERATION	DATE	BY

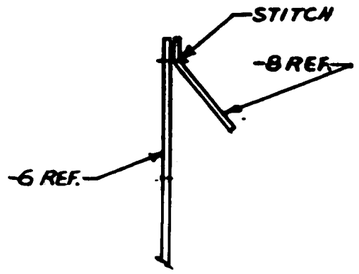

SECTION 'A-A'

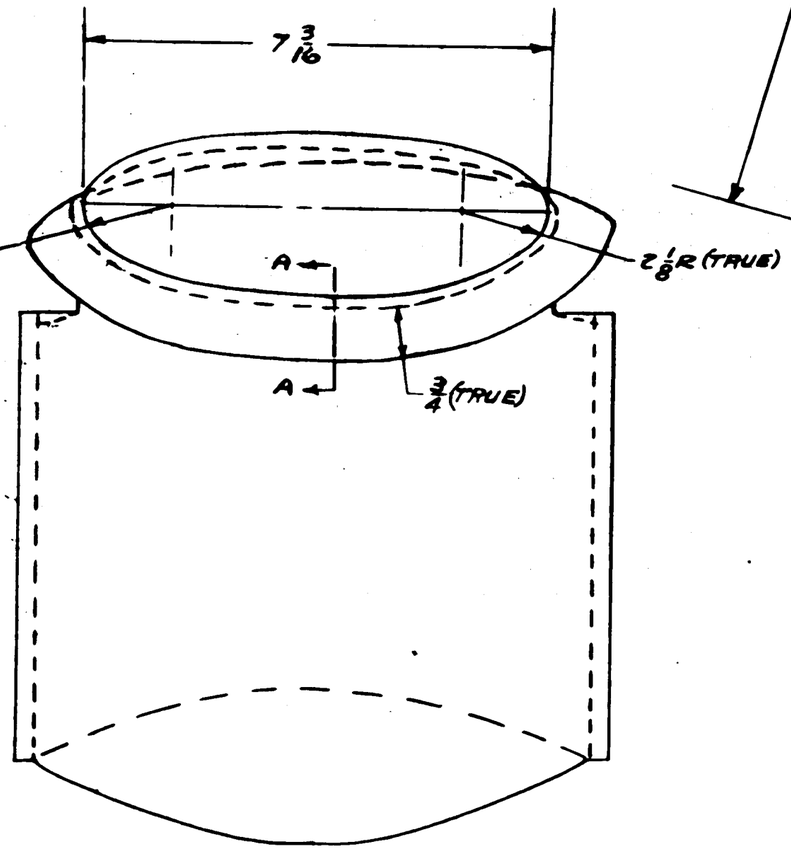

FRONT VIEW

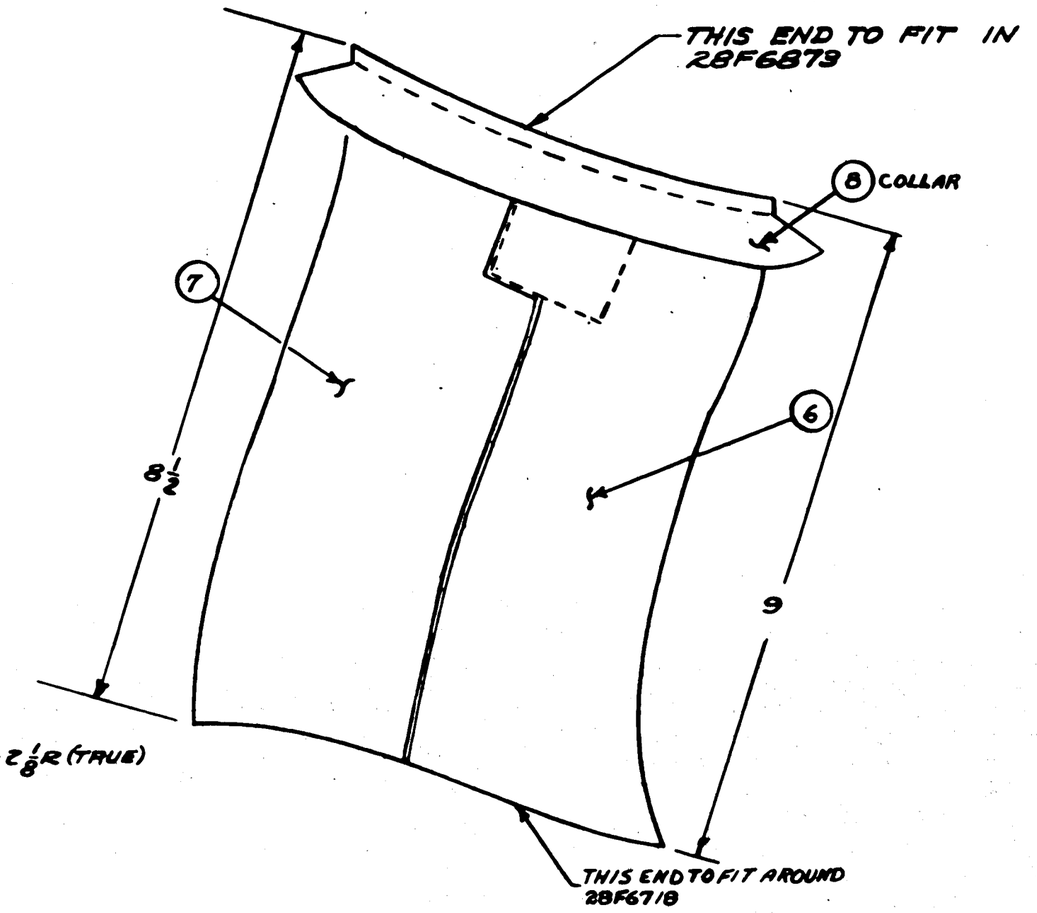

SIDE VIEW

A.C.A.# 178-13
A.C.A.# 23-4

NOTE:
1. -6, -7, -8 TO BE C.A.C.# FAB-13-85, 1/16 ASBESTOS-NEOPRENE COATED-WITHOUT WIRE. SPEC: COMM. OR EQUIV.
2. C.A.C.# FAB-13-85 MAY BE PURCHASED FROM: JOHNS-MANVILLE, SAN FRANCISCO CALIF.

APPROVED FOR TOOLING BY V. Brown 3-18-43

PURCHASE TO DWG.

PART No.	STOCK	MATERIAL	SPEC.	LH REQ. -0	RH REQ. -2	LH REQ. -3	RH REQ. -4	LH REQ. -5	RH REQ.
-8	7 3/16 X 10 1/8	CAC# FAB-13-85	COMM.	1					
-7	11 X 12 1/4	CAC# FAB-13-85	COMM.	1					
-6	12 X 12 1/4	CAC# FAB-13-85	COMM.	1					

PARTS LIST PER ASSY.

PAY-5A 28F6878 1
PAY-5 28F6873 1

ASSY. DASH No. | MODEL | NEXT ASSY. | REQ.

REQUIREMENTS PER AIRPLANE

REPLACED E.O. # B-4187 .2# CALC. WT.
REPLACED BY ACT. WT.

SCALE NONE

STAMP PART NUMBER WHERE SHOWN

A.C.
NAVY NONE | NONE
HEAT TREAT | FINISH

DRAFT 3-8-43 | CHECK | STRUCT | MAT | APPROV | ENG.

NAME FLEX. COUPLING - FURN - LOWER - FIN - PLENUM EMPENNAGE ANTI-ICING

CONSOLIDATED AIRCRAFT CORP. San Diego, Calif.

OPP. HAND

DWG. D SIZE R

28F7556

LET	ALTERATION	DATE	BY

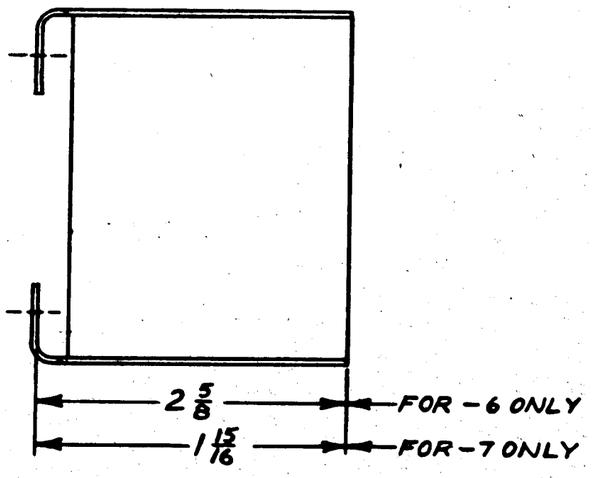

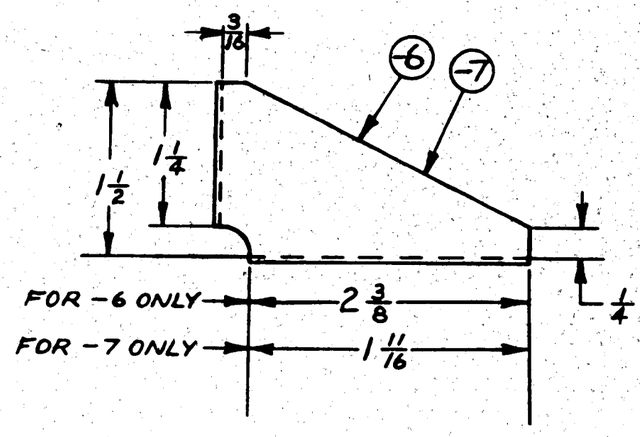

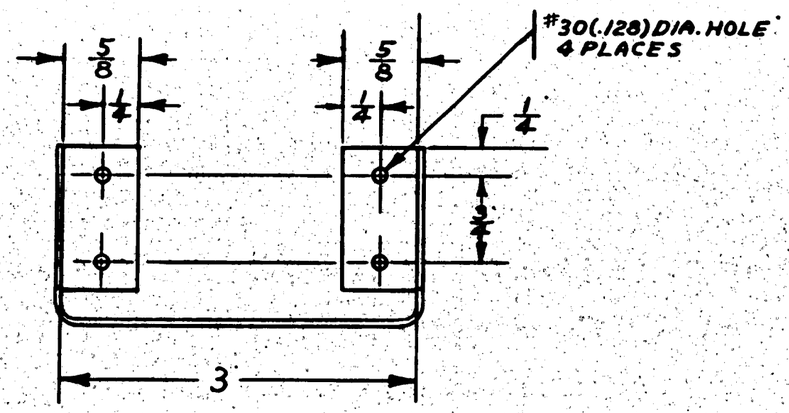

M.C.R-152-A

NOTE:
ALL BEND & RELIEF RADII ARE 3/32

APPROVED FOR
TOOLING BY
V. Brown 3-19-43

ASSY. DASH No.	MODEL	PART ASSY.	QUAN.
-7	28F7527	28E7527	1
-6	28F7527	28E7527	1

REQUIREMENTS PER AIRPLANE

REPLACED

REPLACED BY

ASSY. WT.

SCALE 12"=1'-0"

STAMP PART NUMBER WHERE SHOWN

PART No.	STOCK	MATERIAL	SPEC.	LH REQ. -0	RH REQ. -2	LH REQ. -3	RH REQ. -4	LH REQ. -5	RH REQ.
-7	.051 X 3½ X 6¼	ALCLAD	QQ-A-362-H						
-6	.051 X 4¼ X 6¼	ALCLAD	QQ-A-362-H						

PARTS LIST PER ASSY.

AC

NAVY NONE

HEAT TREAT

Z-P-GP

FINISH

DRAFT 3-M-43 | CHECK 3-18-43 | STRUCT | SEAT | APPROV | ENG. 3-20-43

NAME SUPPORT-FURNS-FOOD LOCKER-OUTBOARD

OPP. HAND NONE

CONSOLIDATED AIRCRAFT CORP. SAN DIEGO, CALIF.

SIZE D

28F7558

R

LET	ALTERATION	DATE	BY
A	IN RIGHT'S. BLOCK NEXT ASSY. 28F7554 WAS 28F7527. (NO WT. CHG.)	8-13-43	[illegible]

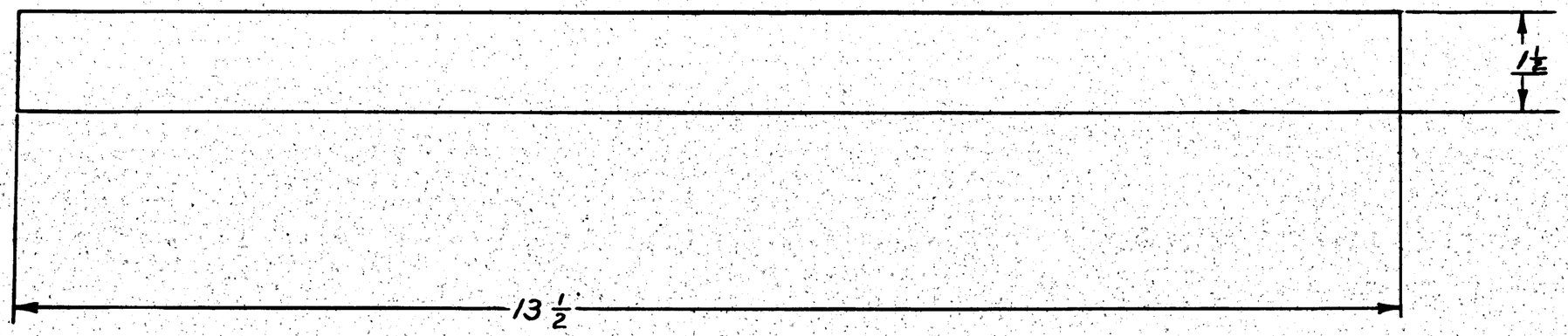

M.C.R.-152-A

APPROVED FOR TOOLING BY V. Brown 3-19-43

ASSY. DASH No.	MODEL	NEXT ASSY.	QUAN.
	PBY-5A	28F7554	1

REQUIREMENTS PER AIRPLANE

REPLACES	.04 GALS. WT.
REPLACED BY	ASY. WT.
± 1/32"	SCALE 12"=1'-0"

STAMP PART NUMBER WHERE SHOWN

PART No.	STOCK	MATERIAL	SPEC.	LH REQ. -0	RH REQ. -2	LH REQ. -3	RH REQ. -4	LH REQ. -5	RH REQ.
PARTS LIST PER ASSY.		.032X[illegible]X3½	ALCLAD 24S-T						

AC							
NAVY NONE	Z-P-GP	3-11-43	3-11-43	[illegible]	[illegible]	3-20-43	3/19/43
HEAT TREAT	FINISH	DRAFT	CHECK	STRUCT	MAT	APPROV	ENGR

NAME FILLER-FURNS-FOOD LOCKER SUPPORT

OPP. HAND NONE

CONSOLIDATED AIRCRAFT CORP. SAN DIEGO, CALIF.

DWG. SIZE D

28F7560

R

LET	ALTERATION	DATE	BY

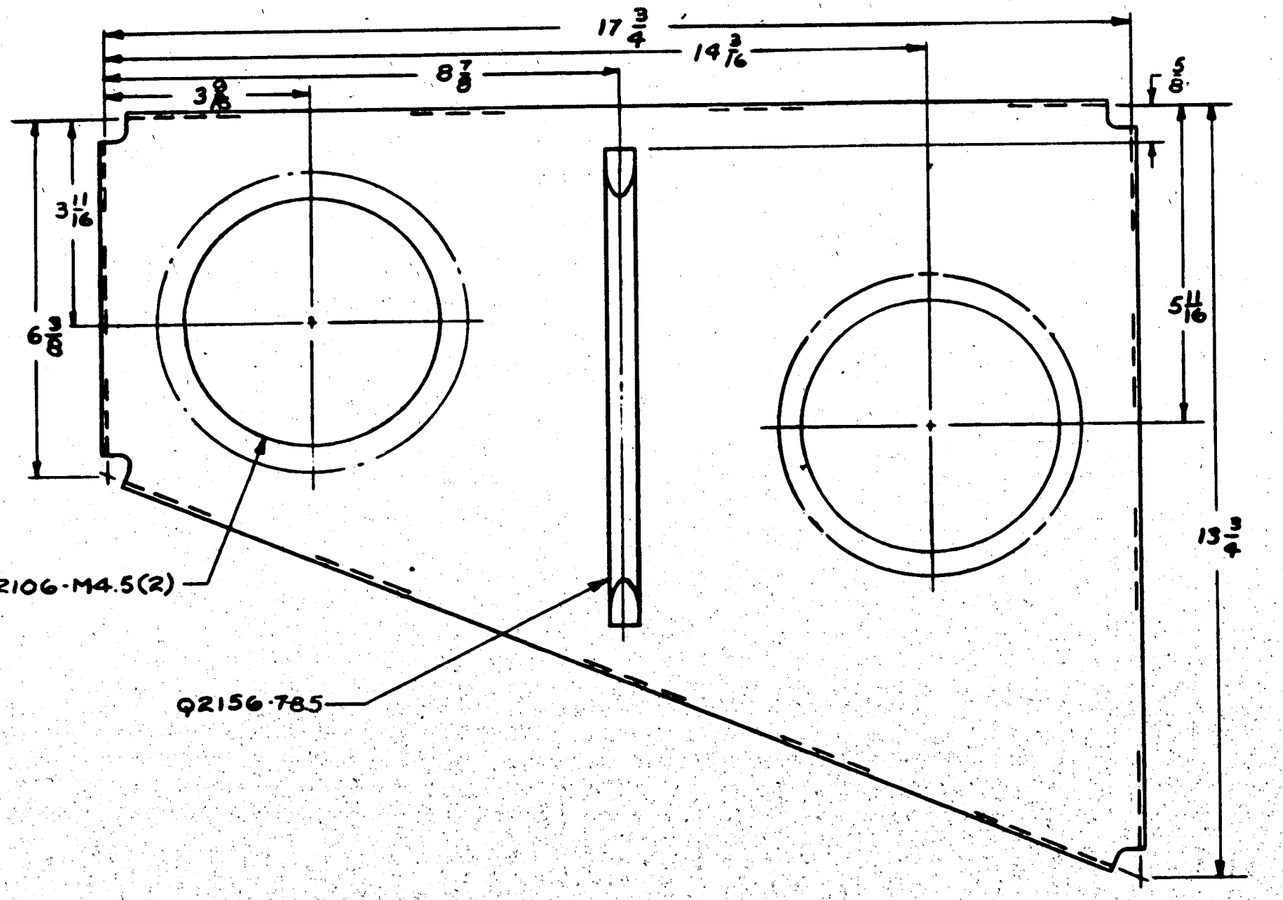

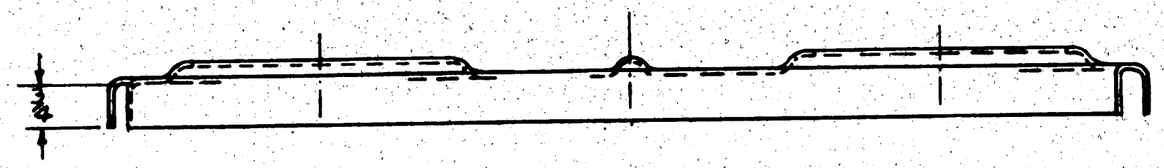

MCR #254-2

APPROVED FOR TOOLING BY
Howard
5/29/43

ASSY. SASH NO.	MODEL	NEXT ASSY.	QTY.
	PBY-5A	28F7567	1

REQUIREMENTS PER AIRPLANE

REPLACES	W. 96 ENG. WT.
REPLACED BY	APP. WT.
LIST OF MATERIAL UNLESS OTHERWISE SPECIFIED: 1/32	SCALE 6" : 1'0"
STAMP PART NUMBER WHERE SHOWN	

PART No.	STOCK	MATERIAL	SPEC.	LH REQ.	RH REQ.	LH REQ.	RH REQ.	LH REQ.	RH REQ.	LH REQ.	RH REQ.	LH REQ.	RH REQ.
	.051 X 15 3/16 X 19 3/8	ALCLAD	QQ-A-362E										
PARTS LIST PER ASSY.				-0		-2		-3		-4		-5	

AC		WAINCE				
NAVY NONE	Z-P-GP	5-1-43				
HEAT TREAT	FINISH	DRAFT	CHECK	STRUCT	MAT	APPROV	ENG.

NAME SUPPORT-FURNS-TRANSMITTER & RECEIVER ALTIMETER-FRONT

OPP. HAND

CONSOLIDATED AIRCRAFT CORP. WF SAN DIEGO, CALIF.

DWG. SIZE D

28F7567

R 28F7567

LET	ALTERATION	DATE	BY
A	ON FACE (DWG. REF.) E IN DIA. FOR -6 LENGTH X 306" WAS X 27.0 FOR -7 LENGTH X 234" WAS 21.5" ON FACE AT "STRIPPING DETAIL" 1 5/16 DIM. WAS 1 3/16. C IN NOTE 3 R 5" RADIUS WAS 18" RADIUS. WT. CHG. NEG.	5-27-43	[illegible]

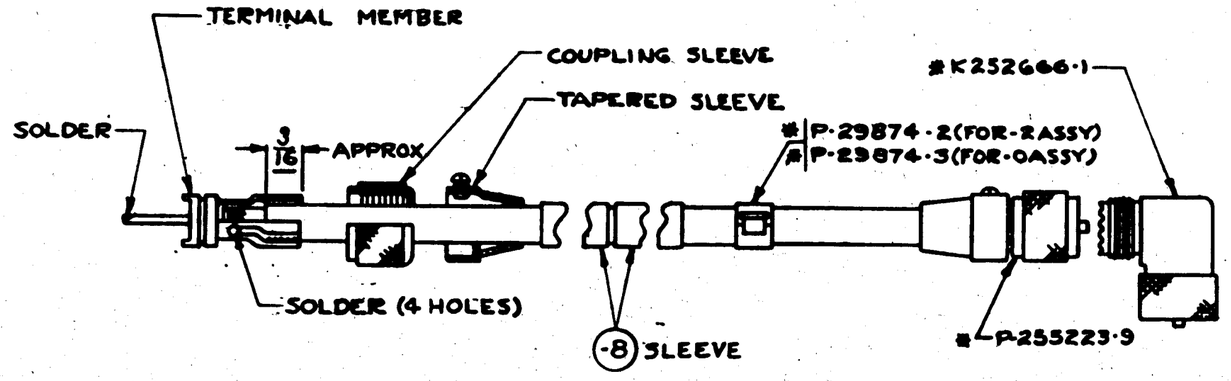

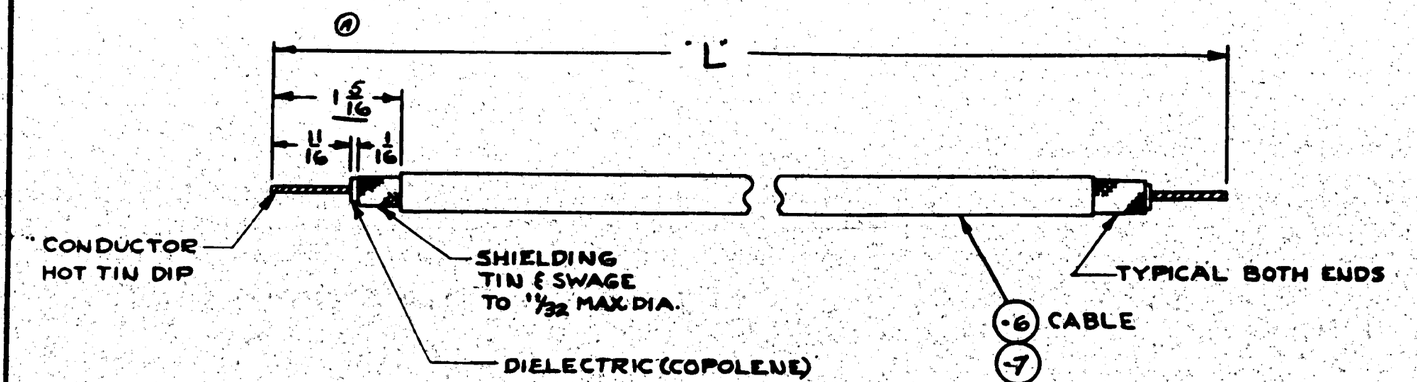

NOTES

1. SINCE THE POLYTHENE INSULATION OF THE CABLE MELTS AT 80°C. TINNING MUST BE DONE QUICKLY WITH A CLEAN HOT IRON TO PREVENT SPOILING THE CABLE.
2. CABLE CANNOT BE BENT IN LESS THAN A 5" RADIUS DUE TO "COLD FLOW" PROPERTIES OF POLYTHENE UNDER COMPRESSION.
3. IF CABLE INSULATION IS DAMAGED BY HEAT, IF CABLE IS SQUEEZED WITH PLIERS OR VISE, OR IF WIRE IS CUT TOO SHORT, THE CABLE MUST BE REPLACED.
4. USING NON-CORROSIVE FLUX OR ROSIN CORE SOLDER, CAREFULLY SOLDER END OF INNER CONDUCTOR TO TERMINAL TIP AND SOLDER BRAID TO NECK OF TERMINAL MEMBER AT FOUR HOLES. AVOID EXCESS SOLDER AND REMOVE ALL SOLDER ON OUTER PERIPHERY OF HOLLOW PIN TERMINAL TO PREVENT MATING INTERFERENCE. SNIP OFF CONDUCTOR EXTENSION (IF ANY) FLUSH WITH TIP OF TERMINAL.
5. SLIDE ON TU-37X12 (VINOLYTE SLEEVE) BEFORE STARTING PLUG ASSEMBLY.
6. ATTACH ADAPTERS BY COUPLING FEMALE END OF ADAPTER TO MALE PLUG AT EACH END OF TRANSMISSION LINES. MAKE SURE THAT TEETH AT FRONT RIM OF PLUGS ARE ENGAGED WITH NOTCHES AT RIM OF ADAPTER BEFORE COUPLING NUTS ARE FIRMLY TIGHTENED.
7. GIVEN LENGTHS OF CABLES ARE APPROX. EXACT LENGTH OF CABLES TO BE DETERMINED ON FIRST INSTALL. AND ENGINEERING NOTIFIED.
8. WARNING! COMBINED LENGTHS OF -6 & -7 CABLES NOT TO EXCEED 50 FEET.
9. ASTERISK (*) INDICATES GOV'T. FURNISHED EQUIPMENT.
10. C.A.C.* TU-37 MAY BE PURCHASED FROM IRVINGTON VARNISH & INS. CO., IRVINGTON, CONN.

DASH NO.	DIM. "L"
-6	306
-7	234

Ⓐ

ASSY. DASH NO.	WT.
-0	3.56#
-2	3.08#

APPPOVED FOR TOOLING BY
E. L. Dalton
6-14-43

| | | |

LET	ALTERATION	DATE	BY
A	ON FACE OF DWG. & IN 9/M		
	* AMPHENOL-97-3108-18-20S		
	WAS * AMPHENOL-97-3108A-18-20S		
	* AMPHENOL-97-3108A-18-20P		
	WAS * AMPHENOL-97-3108A-18-20P		
	IN 9/M - @ LENGTH X 350½" WAS		
	X 27'6" ON FACE AT VIEW "STEP		
	#1 BOTH ENDS" DIM. 2⅜ WAS 1⅜		
	& AT VIEW "STEP #2 BOTH ENDS"		
	3⅜ DIM. WAS 2⅜. AT VIEW		
	SHOWING COLOR IDENT. REMOVED		
	CALL OUTS "KEYWAY (POS. 1)" &		
	"KEYWAY (POS. 2)" ADDED VIEWS		
	SHOWING POSITION OF KEY.		
	WT. CHG. NEG. MCR 254A-1	9-23-43	[illegible]
B	ON FACE OF DWG. ADDED		
	VIEW OF 'CABLE TO PLUG		
	CONNECTIONS FOR M253128-2		
	CABLE.' ADDED NOTE #3 &		
	LABLED ORIGINAL PLUG		
	CONNECTION 'CABLE TO PLUG		
	CONNECTIONS FOR M253685		
	(REF) CABLE (SEE NOTE #3)'		
	IN 9/M FOR -6 PART ADDED		
	'SEE NOTE #3' WT. CHG. NEG. MCR 2543	9-28-43	[illegible]

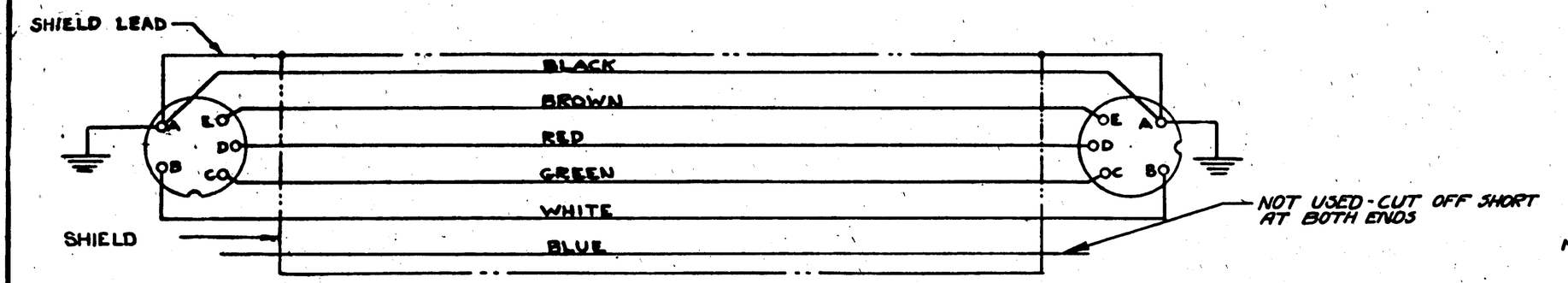

CABLE TO PLUG CONNECTIONS FOR M 253685 (REF.) CABLE. (SEE NOTE #3)

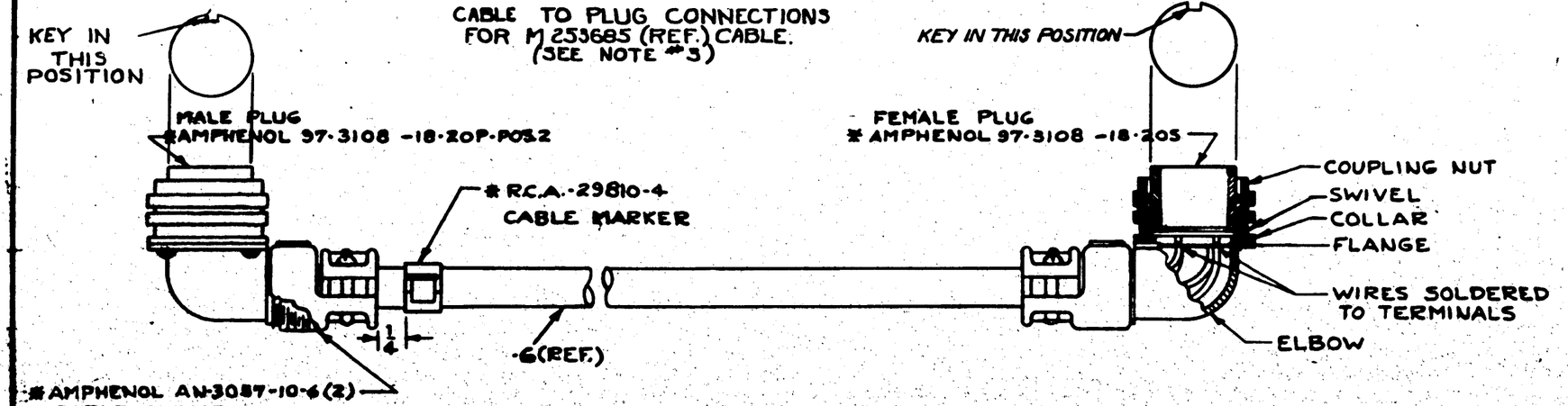

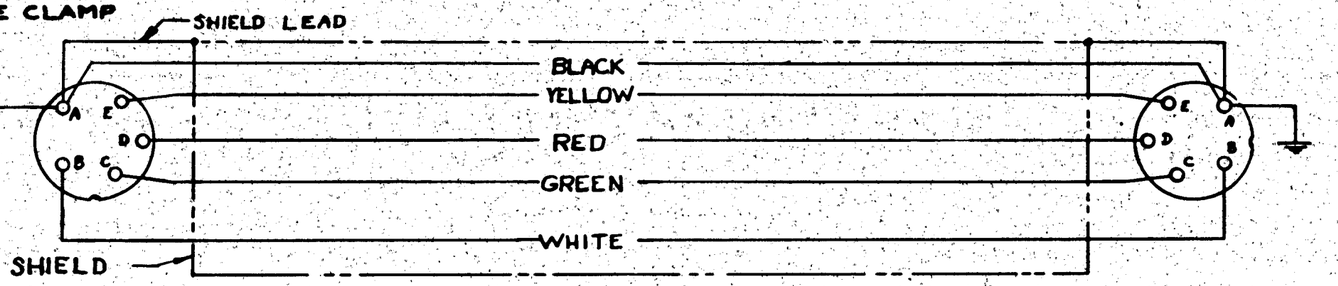

CABLE TO PLUG CONNECTIONS FOR M253128-2 CABLE (SEE NOTE #3)

NOTES:

1. CABLE LENGTH GIVEN IS APPROX. EXACT LENGTH TO BE DETERMINED ON FIRST INSTALL. & ENGINEERING NOTIFIED.
2. AN ASTERISK (*) DENOTES GOVT. FURN. EQUIP.
3. FIVE CONDUCTOR M 253128-2 CABLE MAY BE USED IN PLACE OF M253685 CABLE. (SEE WIRE TO PLUG CONNECTIONS FOR EACH TYPE OF CABLE.)

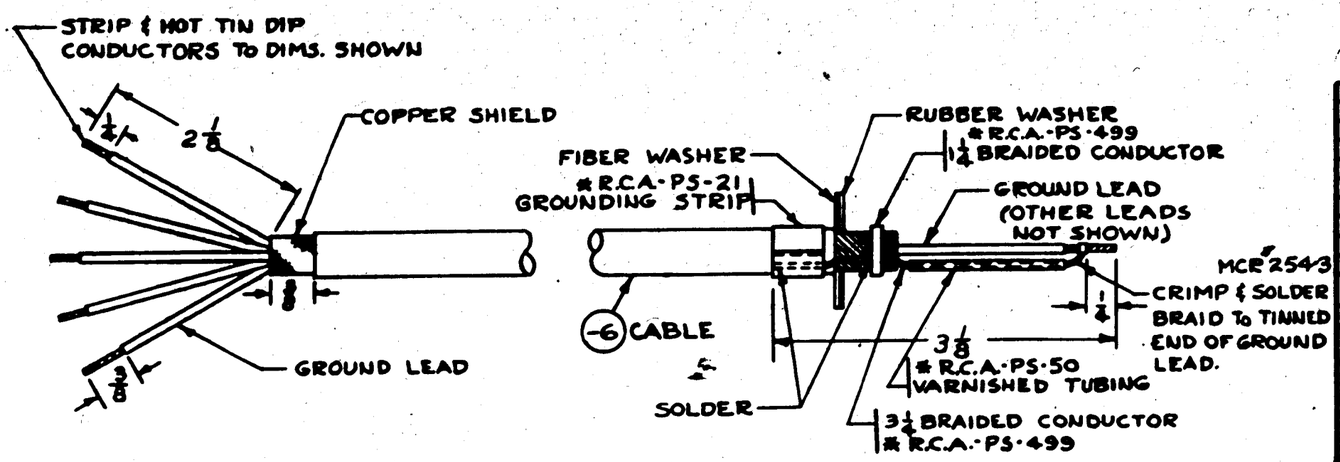

STEP #1 BOTH ENDS

STEP #2 BOTH ENDS

APPROVED FOR TOOLING BY
E. E. Dalton
6-14-43

ASSY. DASH NO.	MODEL	NEXT ASSY.	QTY.
	PBY-5A	28F6955	1

REQUIREMENTS PER AIRPLANE

REPLACES	4.56	CALC. WT.
REPLACED BY		ACT. WT.
+ 1/32	SCALE NO SCALE	

STAMP PART NUMBER WHERE SHOWN

PART No.	STOCK	MATERIAL	SPEC.	LH REQ.	RH REQ.	LH REQ.	RH REQ.	LH REQ.	RH REQ.	LH REQ.	RH REQ.	LH REQ.	RH REQ.
	* R.C.A.-PS-21 SOFT-½ x .010 (TINNED) x 1¾4			2									
	* R.C.A.-PS-50 BLACK-.133 I.D. x 1⅜8			2									
	* R.C.A.-PS-499-1872-005 (TINNED) x 1¼4			2									
	* R.C.A.-PS-499-1872-005 (TINNED) x 3¼4			2									
	* R.C.A.-29810-4			1									
	* AMPHENOL 97-3108 -18-20P-POS.2			1									
	* AMPHENOL-97-3108 -18-20S			1									
	* AMPHENOL-AN-3057-10-6			2									
* -6	RCA-M-253685 5 x 350½		SEE NOTE #3	1									

PARTS LIST PER ASSY. -0 -2 -3 -4 -5

AC			MANUFACT'D					
NAVY NONE	NONE		5-10-43					
HEAT TREAT	FINISH		DRAFT	CHECK	STRUCT	MAT	APPROV	ENG.

NAME CABLE ASSY-FURN-ALTIMETER TRANSMTR RCVR TO LIMIT SWITCH

OPP. HAND

CONSOLIDATED AIRCRAFT CORP. OF SAN DIEGO, CALIF.

DWG. D SIZE 28F7577

28F7577 R

LET	ALTERATION	DATE	BY
A	IN ⅜M FOR -6, LENGTH X 356" WAS X 27'6". ON FACE E IN ⅜M *AMPHENOL 97-3108-18-20S- POS.3 WAS * AMPHENOL 97-3108 -18-20S-POS.3 & * AMPHENOL 97-3108-18-20P-POS.3 WAS * AMPHENOL 97-3108A-18-20P -POS.3. ON FACE AT VIEW TITLED "STEP "1 BOTH ENDS 2⅞ DIM. WAS 1⅞ & AT VIEW TITLED "STEP "2 BOTH ENDS 3⅛ DIM. WAS 2½. AT VIEW SHOWING COLOR IDENTIFICATION REMOVED CALLOUTS "KEYWAY (POS.B)" & "KEYWAY (POS.2). ADDED VIEWS SHOWING POS. AF KEY. WT. CHG. NEG.	9-22-43	BENNETT

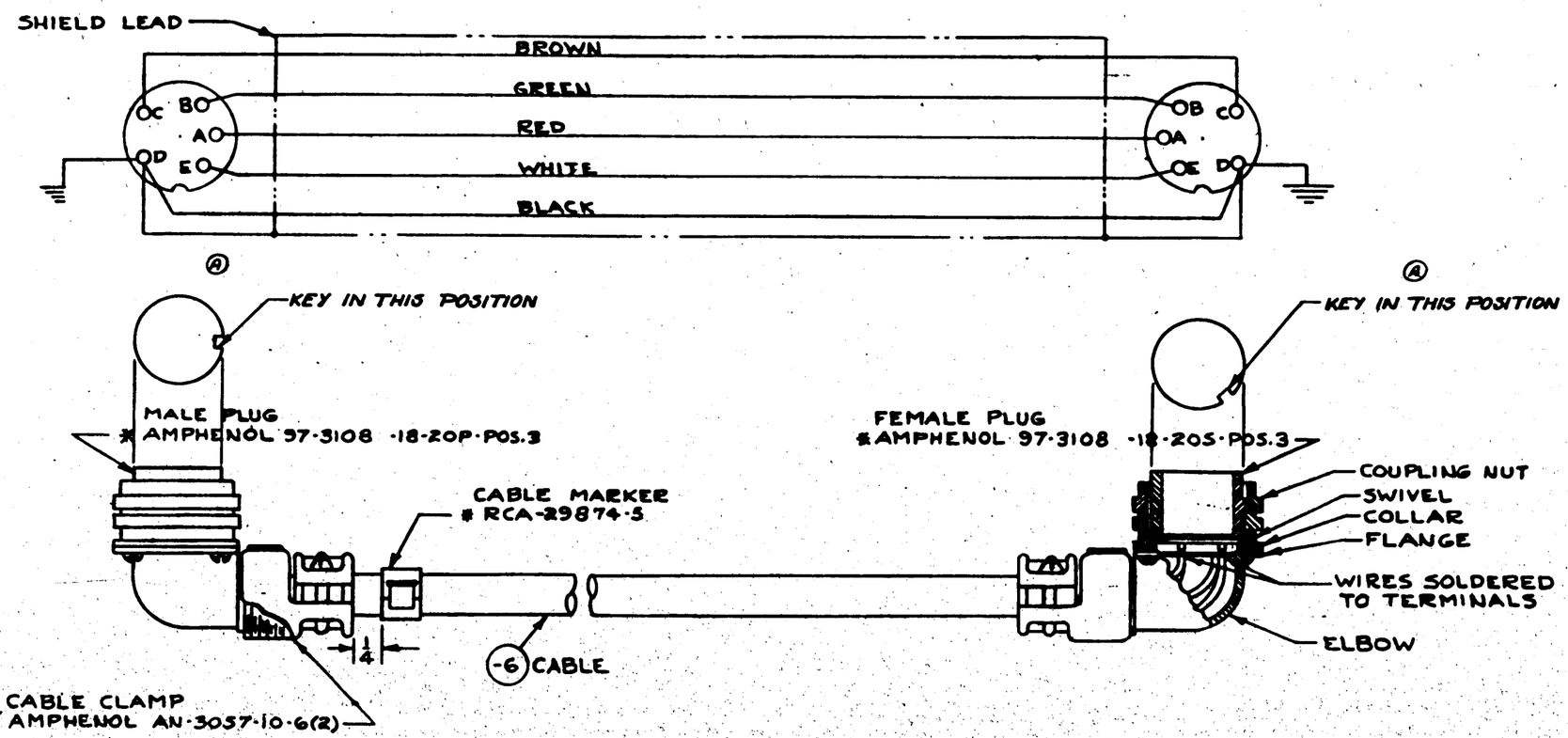

NOTES:
1. CABLE LENGTH GIVEN IS APPROX. EXACT LENGTH TO BE DETERMINED ON FIRST INSTALL. & ENGINEERING NOTIFIED.
2. AN ASTERISK (*) DENOTES GOV'T. FURN. EQUIP.

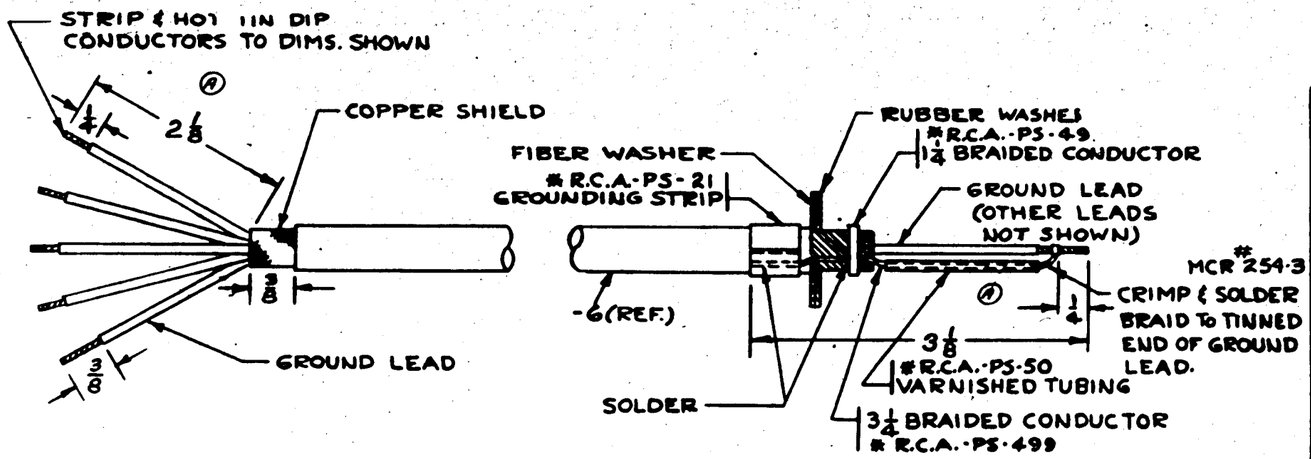

STEP "1 BOTH ENDS

APPROVED FOR TOOLING BY
E. E. Dalton
6-14-43

STEP "2 BOTH ENDS

LET	ALTERATION	DATE	BY
A	NAF 1150-6AC-95 WAS NAF 1150-6AC-72, -6 LENGTH X 31½ WAS X 24, #AMPHENOL 97-3108A-18-20P WAS AMPHENOL 97-3108A-18-20P. ON FIXED ADDED VIEW SHOWING POS. OF KEY. W.T. CHG. MR 9-22-43		

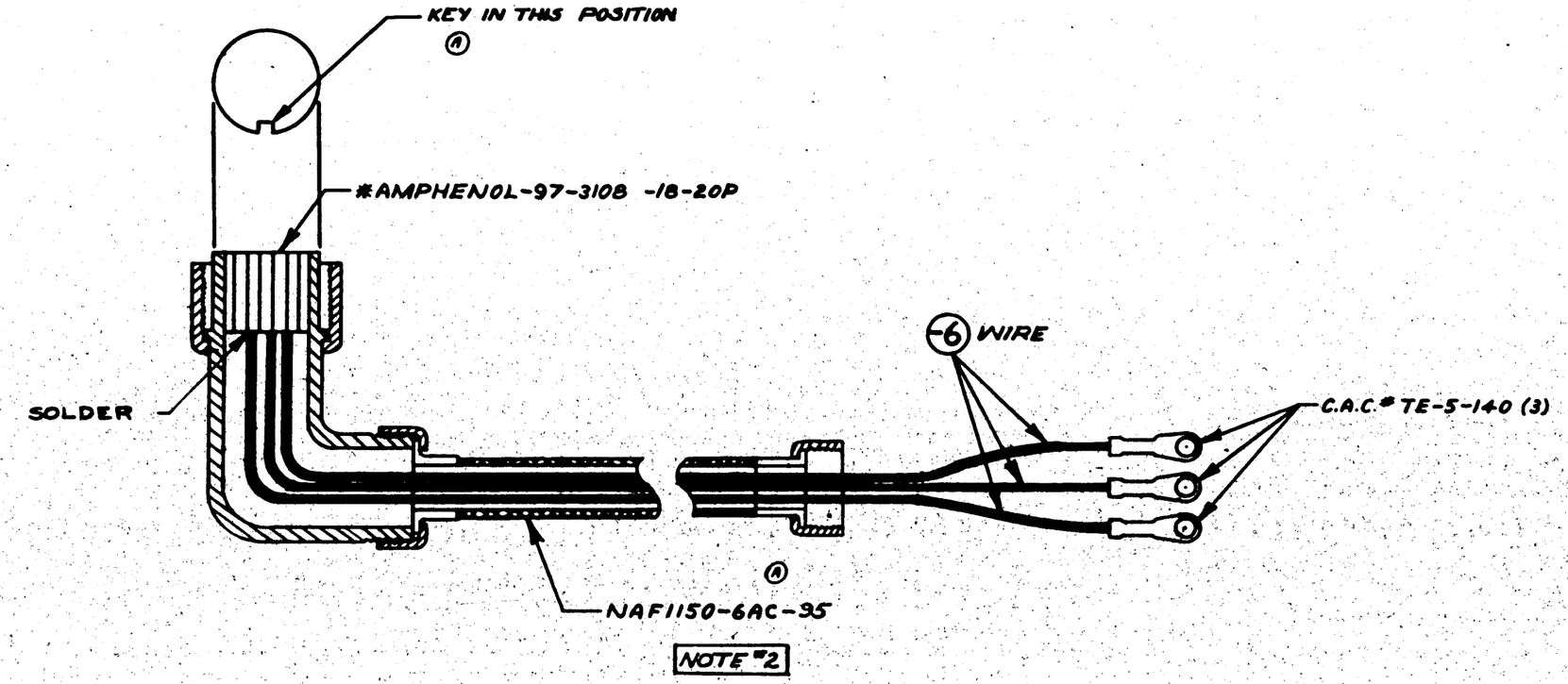

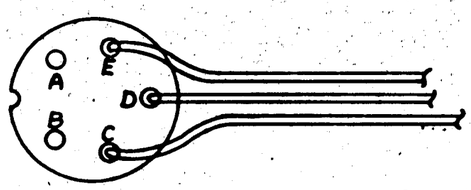

TERMINAL CONNECTIONS TO PLUG.

MC.R.254-3

NOTE

1. ASTERISK (*) INDICATES GOV'T. FURNISHED EQUIP.
2. LENGTH OF FLEX of -6 WIRES APPROX. EXACT LENGTH TO BE DETERMINED ON FIRST INSTALL'N & ENGINEERING NOTIFIED.
3. C.A.C.* TE-5-140, VENDOR'S * YAV-14-H MAY BE PURCHASED FROM BURNDY ENGINEERING CO., NEW YORK, N.Y.

APPROVED FOR TOOLING BY

E. E. Dalton
6-14-43

ASSY. SASH No.	MODEL	NEXT ASSY.	QTY.
	PBY-5A	28F6955	1

REQUIREMENTS PER AIRPLANE

REPLACES — .29 GALS. WT.

REPLACED BY — ASY. WT.

SCALE: SKETCH

STAMP PART NUMBER WHERE SHOWN

PART No.	STOCK	MATERIAL	SPEC.	LH REQ. -0	RH REQ. -0	LH REQ. -2	RH REQ. -2	LH REQ. -3	RH REQ. -3	LH REQ. -4	RH REQ. -4	LH REQ. -5	RH REQ. -5
	*AMPHENOL 97-3108 -18-20P PLUG			1									
	C.A.C.* TE-5-140			3									
	NAF1150-6AC-95			1									
-6	*18GA. WIRE X 91½		AN-J-C-48	3									

PARTS LIST PER ASSY.

AC		DRAFT	CHECK	STRUCT	MAT	APPROV	ENG.
NAVY NONE	NONE	5-17-43					
HEAT TREAT	FINISH						

NAME CABLE-FURNS-ALTIMETER TRANSM'T'R R'C'V'R TO JUNC'T. BOX-INDICATOR

OPP. HAND NONE

DWG. SIZE D — 28F7580

CONSOLIDATED VULTEE AIRCRAFT CORP. SAN DIEGO DIVISION . . SAN DIEGO, CALIF.

R 28F7580

LET	ALTERATION	DATE	BY
A	ON FACE ℄ IN ③/④ NAF 1150-6AC -73 WAS NAF 1150-6AC-72 IN ③/④ -6 #18 GA. WIRE X 27½ WAS -6 #18 GA. WIRE X 24, ℄ 97-3108 -18-6S WAS 97-3108 -18-6S. ON FACE OF DWG. ADDED VIEW SHOWING POS. OF KEY. WT. CHG. NEG.		

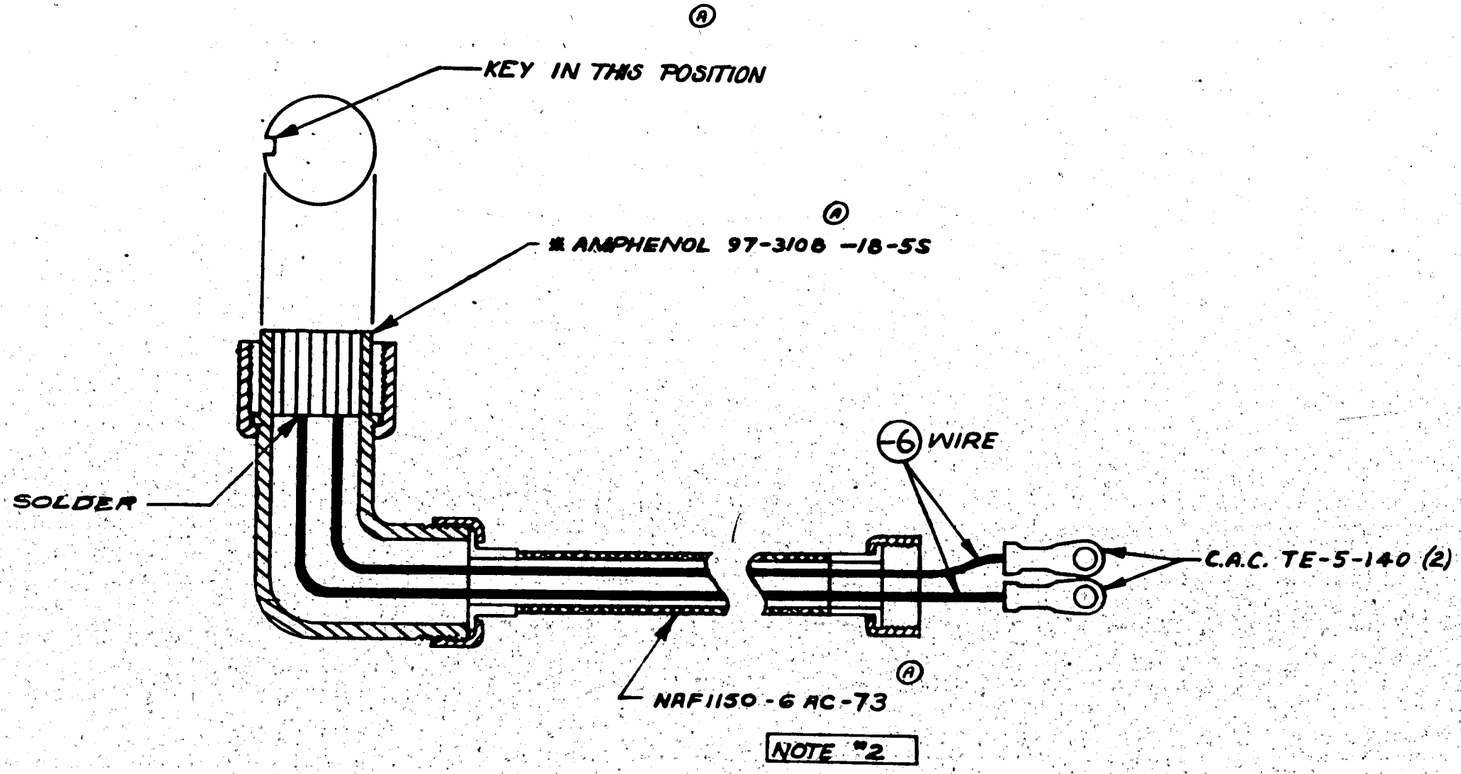

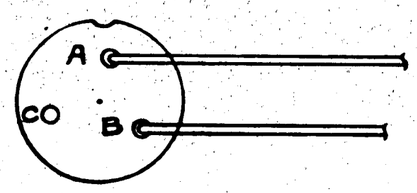

TERMINAL CONNECTIONS TO PLUG.

MCR 254-3

NOTE:

1. ASTERISK (*) INDICATES GOV'T. FURNISHED EQUIP.
2. LENGTH OF FLEX ℄ -6 WIRES APPROX. EXACT LENGTH TO BE DETERMINED ON FIRST INSTALL'N ℄ ENGINEERING NOTIFIED.
3. CAC.# TE-5-140, VENDORS #YAV-14-H MAY BE PURCHASED FROM BURNDY ENGINEERING CO., NEW YORK, N.Y.

APPROVED FOR TOOLING BY
E. E. Dalton
6-14-43

ASSY. DASH NO.	MODEL	NEXT ASSY.	QTY.
	PBY-5A	28F6955	1

REQUIREMENTS PER AIRPLANE

REPLACES	.27 CALC. WT.	
REPLACED BY	ASY. WT.	
SCALE SKETCH		

STAMP PART NUMBER WHERE SHOWN

PART No.	STOCK	MATERIAL	SPEC.	LH REQ.	RH REQ.	LH REQ.	RH REQ.	LH REQ.	RH REQ.	LH REQ.	RH REQ.	LH REQ.	RH REQ.
	*AMPHENOL 97-3108 -18-5S PLUG				1								
	C.A.C.# TE-5-140				2								
	NAF1150-6AC-73				1								
-6	#18GA. WIRE X 27½		AN-J-C-48		2								
PARTS LIST PER ASSY.					-0		-2		-3		-4		-5

AC						
NAVY NONE	NONE					
HEAT TREAT	FINISH	DRAFT	CHECK	STRUCT	MAT	APPROV	ENG.
		5-17-43					

NAME CABLE-FURNS-ALTIMETER TRANSM'T'R R'C'V'R TO JUNC'T. BOX-POWER

OPP. HAND NONE

CONSOLIDATED AIRCRAFT CORP. SAN DIEGO, CALIF.

SIZE D 28F7581

R

28F7581

LET	ALTERATION	DATE	BY

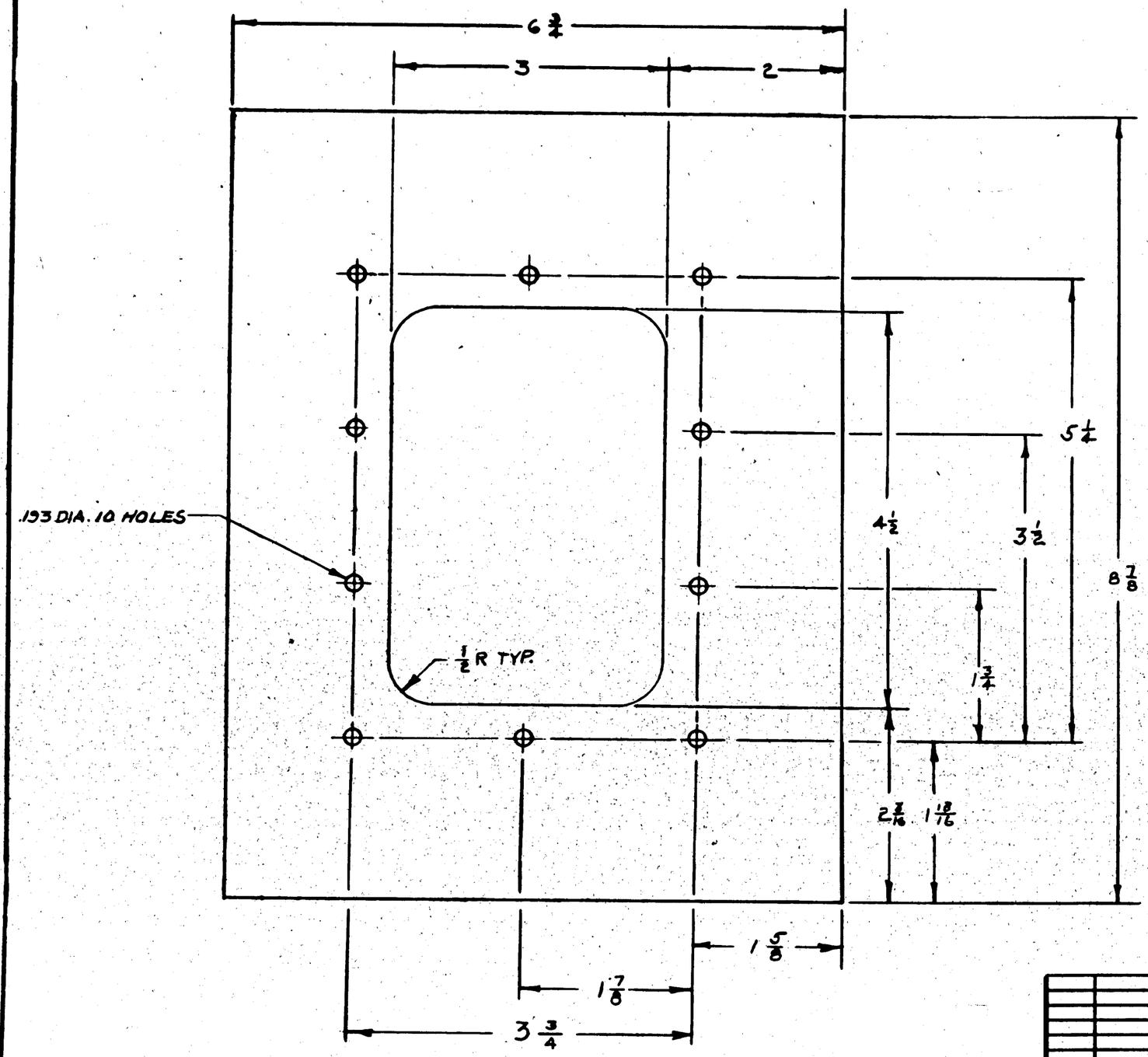

MCR 254-1

APPROVED FOR TOOLING BY
R. L. Dalton
6-14-43

ASSY. DRAW. No.	PBY-5A	28F7584	2
	MODEL	NEXT ASSY.	QUAN.

REQUIREMENTS PER AIRPLANE

REPLACES		.07 Orig. Wt.
REPLACED BY		Adv. Wt.
Limit on Dimensions Unless Otherwise Specified ± 1/32	SCALE 12" = 1'0"	
STAMP PART NUMBER WHERE SHOWN		

PART No.	STOCK	MATERIAL	SPEC.	LH REQ.	RH REQ.	LH REQ.	RH REQ.	LH REQ.	RH REQ.	LH REQ.	RH REQ.	LH REQ.	RH REQ.
PARTS LIST PER ASSY.				-0		-2		-3		-4		-5	

AC		KRIEGER	Drawing Check	Engr. Check	Engr. Chief	Engr. Mgr.	
NAVY ——	——	5-20-43					
HEAT TREAT	FINISH	DRAFT	CHECK	STRUCT	MAT	APPROV	ENG

NAME INSULATION-ALTIMETER ANTENNA ACCESS DOOR
CONSOLIDATED AIRCRAFT CORP. SAN DIEGO, CALIF.

OPP. HAND NONE
SIZE D
28F7587

28F7587 R

LET	ALTERATION	DATE	BY

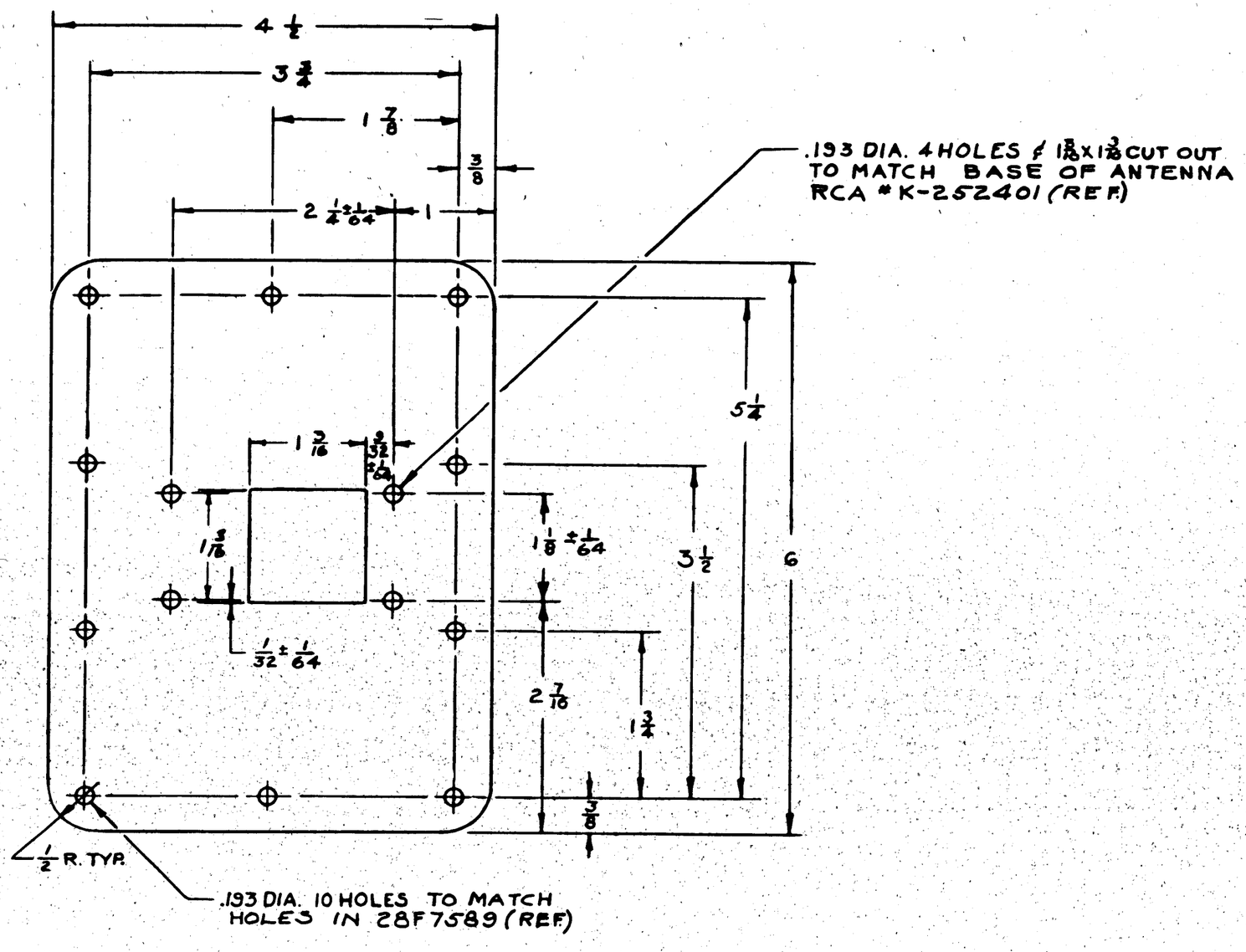

MCR 254-1

APPROVED FOR TOOLING BY
E E. Dalton
6-14-43

ASSY. GROUP No.	MODEL	NEXT ASSY.	QTY.
	PBY-5A	28F7584	2

REQUIREMENTS PER AIRPLANE

REPLACED	.08 Assy. Wt.
REPLACED BY	Acc. Wt.
USED ON Experimental Models Only	SCALE 12" - 1'0"

PART No.	STOCK	MATERIAL	SPEC.	LH REQ. -0	RH REQ. -0	LH REQ. -2	RH REQ. -2	LH REQ. -3	RH REQ. -3	LH REQ. -4	RH REQ. -4	LH REQ. -5	RH REQ. -5
PARTS LIST PER ASSY.	.040 X 4 5/8 X 6 1/8	ALCLAD	QQ-A-362-H										

AC		DESIGN					-
NAVY ——	Z-P-2GP	5-20-43					
HEAT TREAT	FINISH	DRAFT	CHECK	STRUCT	MAT	APPROV	ENG.

NAME DOOR - ALTIMETER ANTENNA ACCESS

OPP. HAND NONE

CONSOLIDATED AIRCRAFT CORP. WF SAN DIEGO, CALIF.

SIZE D

28F7588

28F7588 R

LET	ALTERATION	DATE	

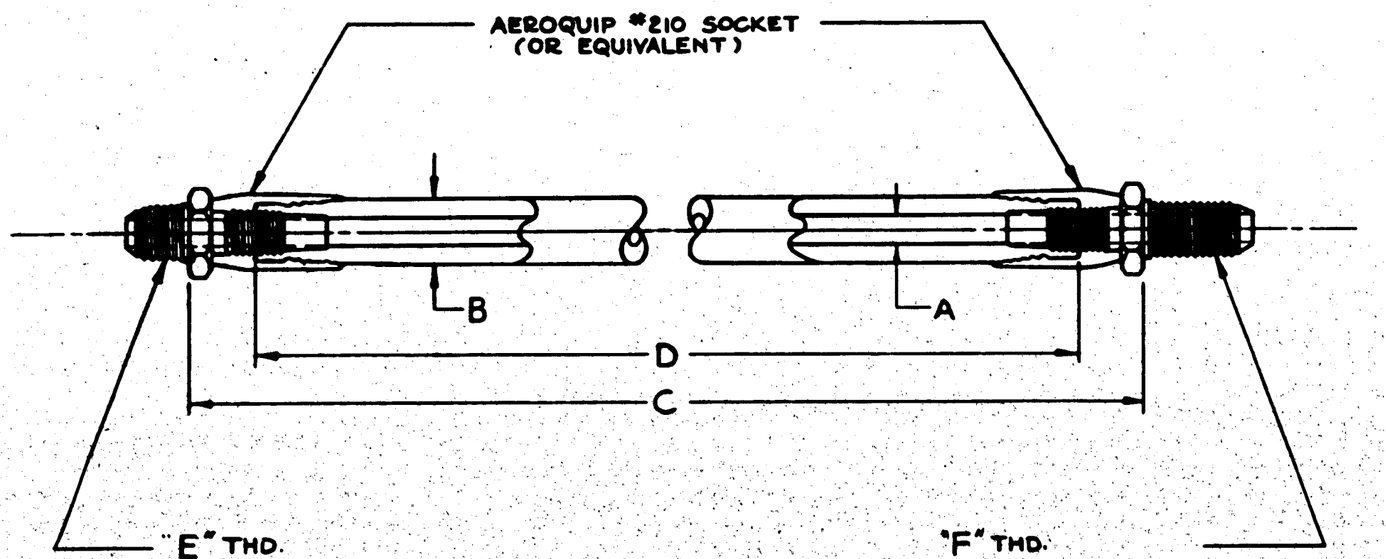

NOTES:
1. HOSE ASSY'S ON THIS DRAWING MAY BE PURCHASED FROM AEROQUIP CORP., JACKSON, MICH.
2. HOSES TO BE IN ACCORDANCE WITH AN-H-6a SPECIFICATION EXCEPT END FITTINGS TO BE SUITABLE FOR USE WITH AC811 TYPE FITTINGS AS NOTED.
3. HOSE ASSEMBLIES ARE TO BE STAMPED OR STENCILED WITH THE APPROPRIATE C.A.C. PART NO. (EXAMPLE:28F7591-6) BY THE VENDOR.

DASH NO.	A	B	C	D	E	F	AEROQUIP DASH NO'S (REF) SOCKET	LONG NIPPLE	SHORT NIPPLE	AEROQUIP ASSY NO
-6	.188 +.010 -.005	33/64 +1/64 -1/64	14	12.92	7/16-20	7/16-20	210-4	244-4	242-4	322-4

MAXIMUM WORKING PRESS (ACTUAL)	TO REPLACE & BE INTERCHANGEABLE WITH HOSE NO.	PLACE & SYSTEM IN WHICH HOSE IS USED	TYPE OF FLUID USED (REF.)	WEIGHT OF ASSY
1050	AC39D693-4-14	TO HYDRAULIC PRESSURE GAUGE	AN-VV-O-366A	.23

ASSY. DASH No.	MODEL	NEXT ASSY.	REQ.
-6	28-5AMN	28F6500	1
-6	28-5AMC	28F6500	1
-6	PBY-5A	28F6500	1

REQUIREMENTS PER AIRPLANE

REPLACES NOTED — CALC. WT.

REPLACED BY — ACT. WT.

LIMIT OR DIMENSIONS UNLESS OTHERWISE SPECIFIED: + / − — SCALE NO SCALE

STAMP PART NUMBER WHERE SHOWN

PART No.	STOCK	MATERIAL	SPEC.	LH REQ. -0	RH REQ. -0	LH REQ. -2	RH REQ. -2	LH REQ. -3	RH REQ. -3	LH REQ. -4	RH REQ. -4	LH REQ. -5	RH REQ. -5
-6	NOTED	NOTED											

PARTS LIST PER ASSY.

AC NONE — NAVY — HEAT TREAT — FINISH

JUNIOR — DRAFT 6-3-43 — CHECK — STRUCT — MAT — APPROV — ENG.

NAME HOSE ASS'Y- MED. PRESS. DETACHABLE HOSE FITT'GS

CONSOLIDATED AIRCRAFT CORP. SAN DIEGO, CALIF.

OPP. HAND NONE

SIZE D — DWG. 28F7591

APPROVED FOR TOOLING BY Harlow 6-23-43

R

1697-82

LET	ALTERATION	DATE	BY
A	ON FACE 28F2229 & 28F2227 WERE 29F2229 & 29F2227 RESPECT. ARROW TO CALLOUT OF 28F2229 WAS TO 28F2227. NO WT. CHG.	9-2-43	MAINT

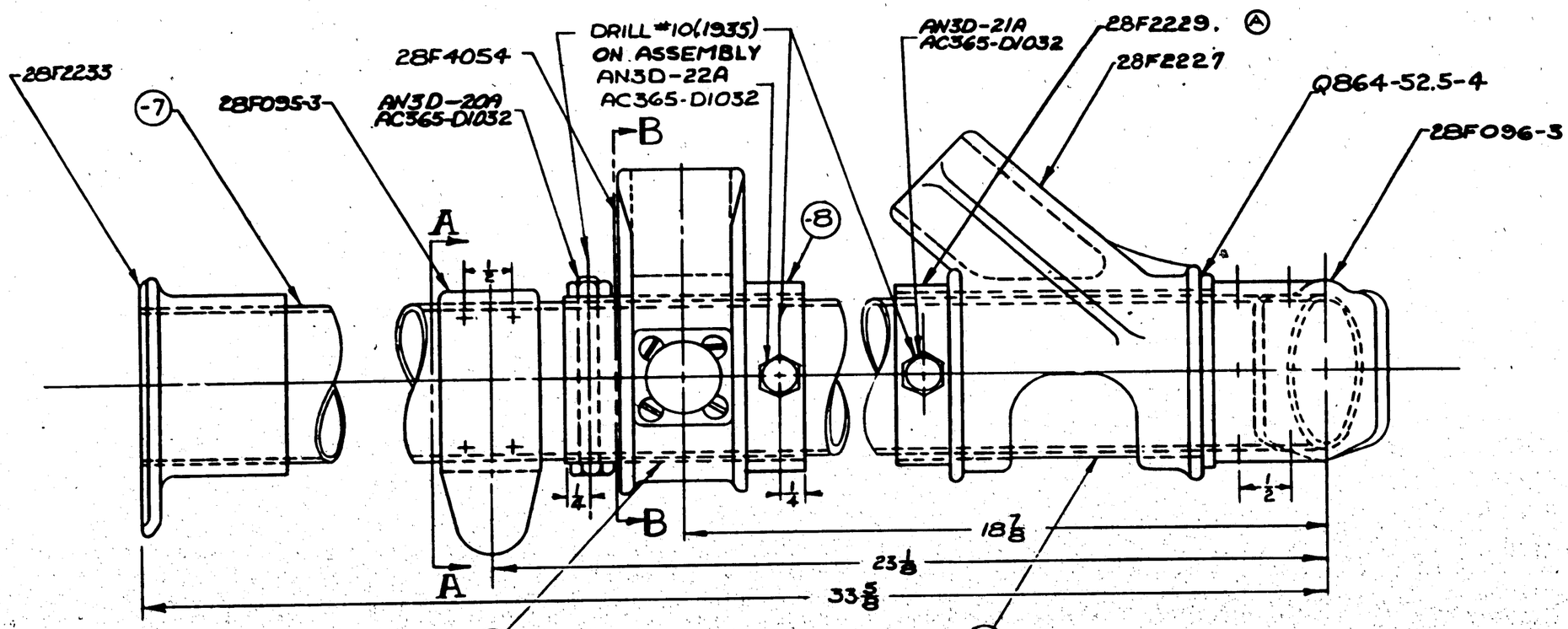

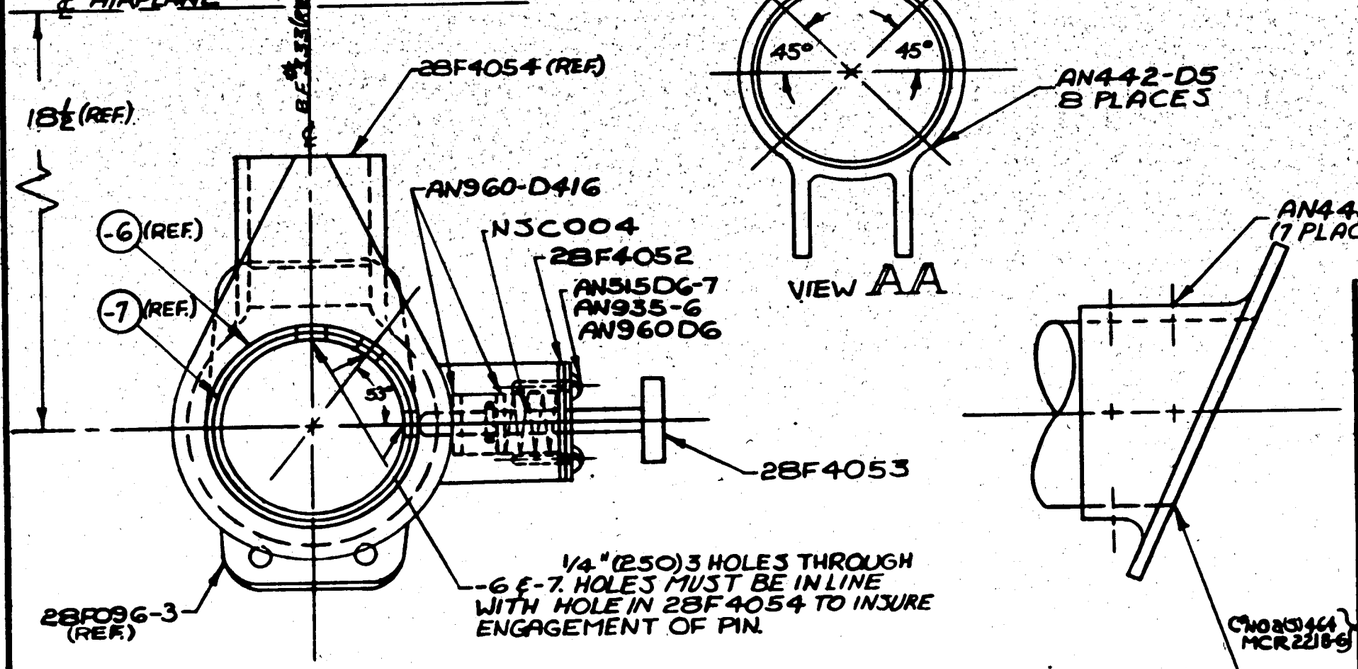

VIEW-BB
SHOWING LOCKING ARRANGEMENT AND LOCATIONS OF LOCKING HOLES IN TUBE

28F096-3 (REF.) LOWER FITTING SHOWING RELATIVE POSITION OF FITTING TO LOCKING HOLES. TUBE TO BE FLUSH WITH BOTTOM OF CASTING.

NOTES:
1. GREASE SWIVEL JOINTS WITH PARKER ANTI-SEIGE COMPOUND OR EQUIV.
2. GRIND -6 O.D. TO 1.750 +.005 -.002. FINISH C.P. 2GP ON ASSEM.
3. -9 MAY BE MADE FROM 1 3/4 O.D. X .065 & REAMED TO FIT OVER -7. FINISH ON -7, -8, -9, = ZP-2GP

APPROVED FOR TOOLING BY
E. E. Dalton
6-14-43

ASSY. DASH	MODEL	NEXT ASSY.	REQ.
	PBY-5A	28F2174	1

REQUIREMENTS PER AIRPLANE

REPLACED	2.55 Basic Wt.
REPLACED BY	Adv. Wt.
± 1/32	SCALE 12" = 1'-0"

STAMP PART NUMBER WHERE SHOWN

PART No.	STOCK	MATERIAL	SPEC.	LH REQ.	RH REQ.	LH REQ.	RH REQ.	LH REQ.	RH REQ.	LH REQ.	RH REQ.	LH REQ.	RH REQ.
	PARTS LIST PER ASSY.			-0		-2		-3		-4		-5	
AN442-D5													
AN442-D4													
AN3D -22A													
AN3D -20A													
AN3D -21A													
AN960D416													
AN960-D6													
AN935-6													
AN515-D6-7													
AC365-D1032													
Q864-52.5-4													
NSC004													
28F4054													
28F4053													
28F4052													
28F2238													
28F2229													
28F2227													
28F096-3													
28F095-3													
-9	1 3/4 O.D. X .058 X 5 1/4	AL. ALLOY TUBE 24 ST	44T-28										
-8	2.00 X .120 X 5 1/4	AL. AL. TUBE 24 ST	44T-28										
-7	1 3/4 O.D. X .049 X 34 1/4	AL. AL. TUBE 24 ST	44T-28										
-6	1 3/4 O.D. X .058 X 5 1/4	CHROME MOLY TUBE	AN-WW-T-850										

AC		4.5-43	Owner
NAVY NONE	NOTED	11-Rons	6-10-43
HEAT TREAT	FINISH	DRAFT	CHECK

STRUCT	MAT	APPROV	ENG.

NAME SUPPORT ASSEMBLY-NAVIGATORS TABLE & SEAT
OPP. HAND
CONSOLIDATED VULTEE AIRCRAFT CORP. SAN DIEGO DIVISION . . . SAN DIEGO, CALIF.
DWG. D SIZE 28F7595

28F7595R

LET	ALTERATION	DATE	BY

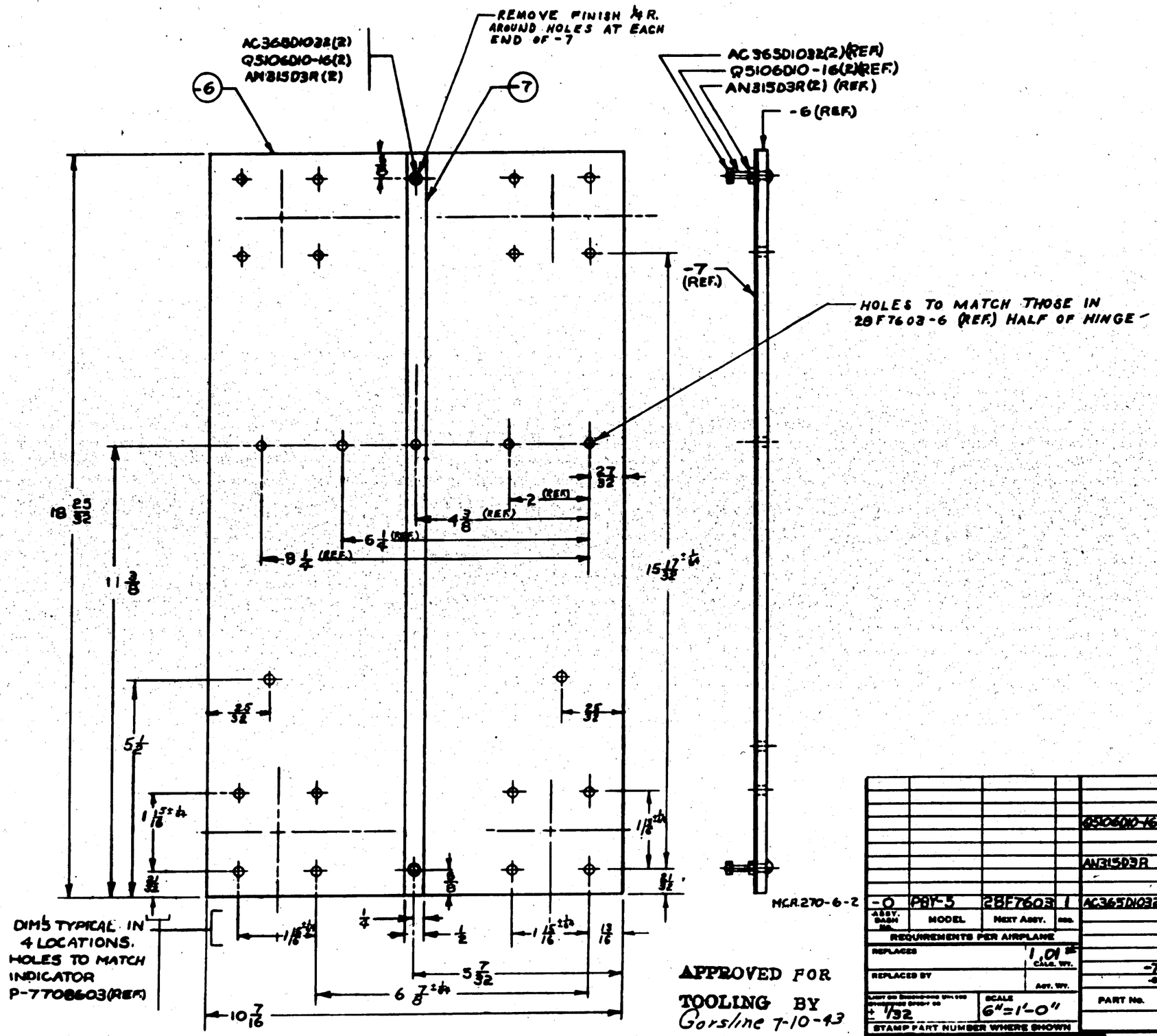

APPROVED FOR TOOLING BY Gorsline 7-10-43

NOTES—

1. HOLES ARE .193 AT ALL LOCATIONS.
2. FINISH—WOOD PARTS SHALL HAVE ONE COAT OF APPROVED WATERPROOF WOOD SEALER, ONE COAT OF FILLER ACROSS THE GRAIN & THE EXCESS RUBBED OFF & ONE SPRAY COAT OF CLEAR SPAR VARNISH, (PER SPEC. #ZF-28-017)

METAL PARTS TO HAVE FINISH Z-P-GP.

ASSY. DASH NO.	MODEL	NEXT ASSY.	REQ.
-0	PBY-5	28F7603	1

REQUIREMENTS PER AIRPLANE

REPLACES — 1.01 lbs CALC. WT.

REPLACED BY — ADV. WT.

± 1/32 — SCALE 6"=1'-0"

STAMP PART NUMBER WHERE SHOWN

PART No.	STOCK	MATERIAL	SPEC.	LH REQ.	RH REQ.	LH REQ.	RH REQ.	LH REQ.	RH REQ.	LH REQ.	RH REQ.	LH REQ.	RH REQ.
				PARTS LIST PER ASSY.		Dottands		-0		-2		-3		-4		-5	
-7	.092 X 5/8 X 18 7/8 ALC. SHT.		QQA362-T	1												Y	
-6	¼ X 10 5/8 X 10 3/4	3 PLY SPRUCE PLYWOOD	AN-NN-P-511	1													
AN315D3R										2							
QS106D10-16										2							
AC365D1032										2							

AC		LOONEY									
NAVY	NOTED	6-16-43									
HEAT TREAT.	FINISH	DRAFT	CHECK	STRUCT	MAT	APPROV	ENG.				

NAME BASE-ASB RADAR RECEIVER TILT TOP MOUNTING

CONSOLIDATED VULTEE AIRCRAFT CORP. WF SAN DIEGO DIVISION . . SAN DIEGO, CALIF.

OPP. HAND NONE

DWG. SIZE D

28F7599

R 28F7599

LET	ALTERATION	DATE	BY

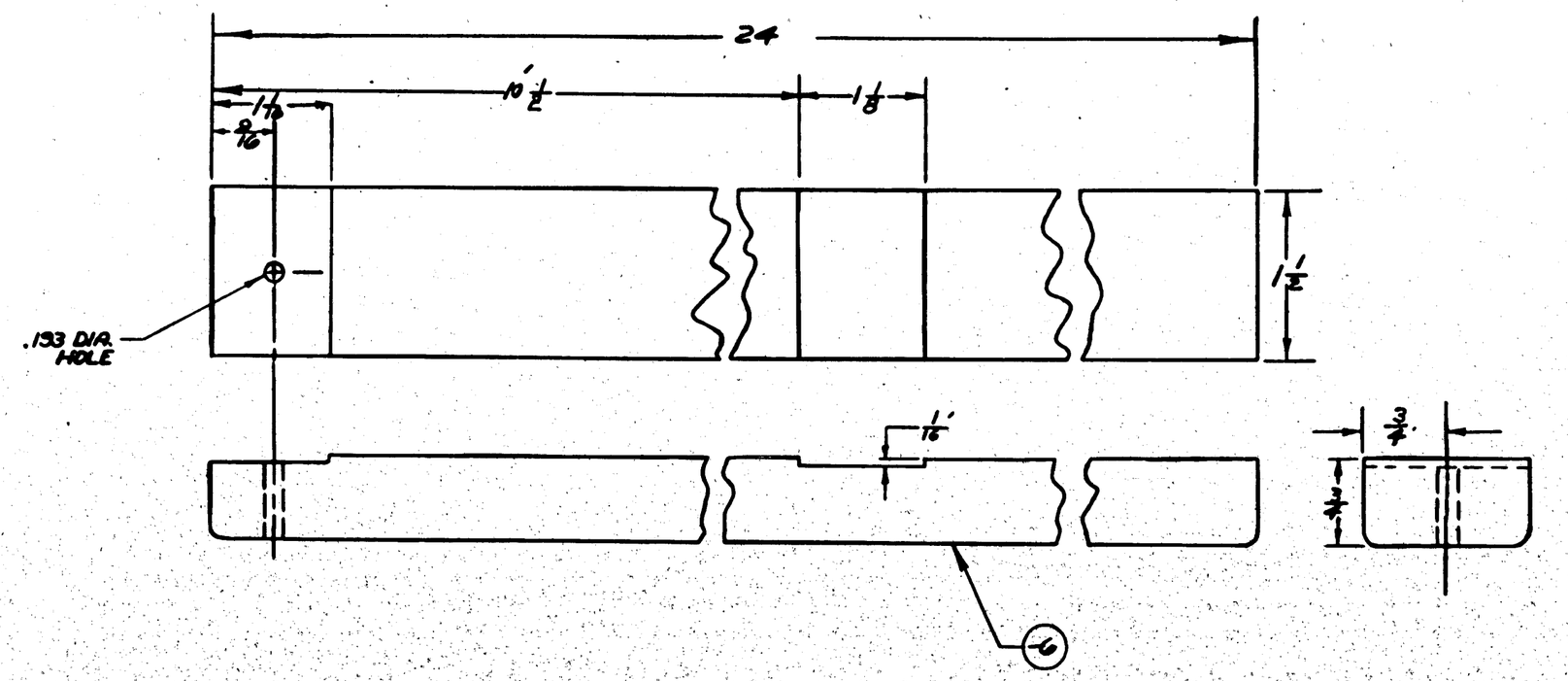

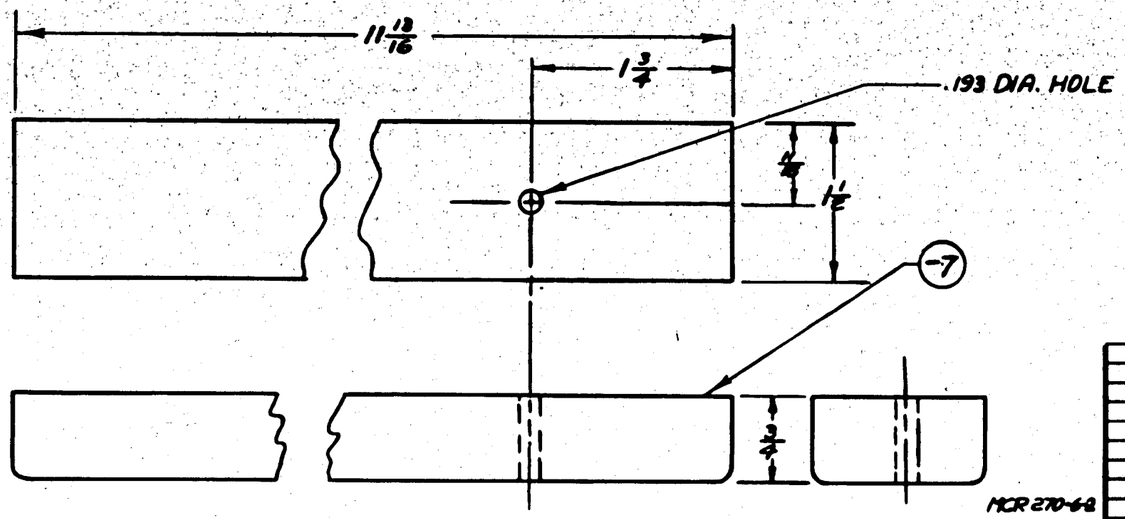

MCR 270-68

ALL RADII 1/8

DASH NO	WEIGHT
-6	.42
-7	.21

APPROVED FOR TOOLING BY
Gorline 7-10-43

FINISH: ONE SPRAY COAT OF WATERPROOF WOOD SEALER, LIGHT SAND, TWO SPRAY COATS OF WATERPROOF CLEAR LACQUER AND ONE COAT OF GREEN PRIME. INSULATE PARTS CONTACTING METAL WITH ONE COAT OF VARNISH.

ASSY. DASH NO.	MODEL	NEXT ASSY.	REQD.
-7	PBY-5A	28F7603	1
-6	PBY-5A	28F7603	2

REQUIREMENTS PER AIRPLANE

REPLACES — NOTED CALC. WT.

REPLACED BY — ADV. WT.

SCALE 12" = 1'0"

STAMP PART NUMBER WHERE SHOWN

PART NO.	STOCK	MATERIAL	SPEC.	LH REQ.	RH REQ.	LH REQ.	RH REQ.	LH REQ.	RH REQ.	LH REQ.	RH REQ.	LH REQ.	RH REQ.
-7	1½ x ⅜ x 12 7/8	WHITE WESTERN PINE	AN-P-18										
-6	1½ x ¾ x 29 ¼	WHITE WESTERN PINE	AN-P-18										
PARTS LIST PER ASSY.				-0		-2		-3		-4		-5	

Difference

AC		6-10-43	
NAVY NONE	NOTED	DESIGNER	
HEAT TREAT	FINISH	DRAFT	CHECK / STRUCT / MAT / APPROV / ENGR.

NAME SUPPORTS - ASB. RADAR OPERATOR'S TABLE

OPP. HAND

DWG. D SIZE

28F7605

CONSOLIDATED VULTEE AIRCRAFT CORP. WF SAN DIEGO DIVISION . . . SAN DIEGO, CALIF.

R

28F7605

LET	ALTERATION	DATE	BY

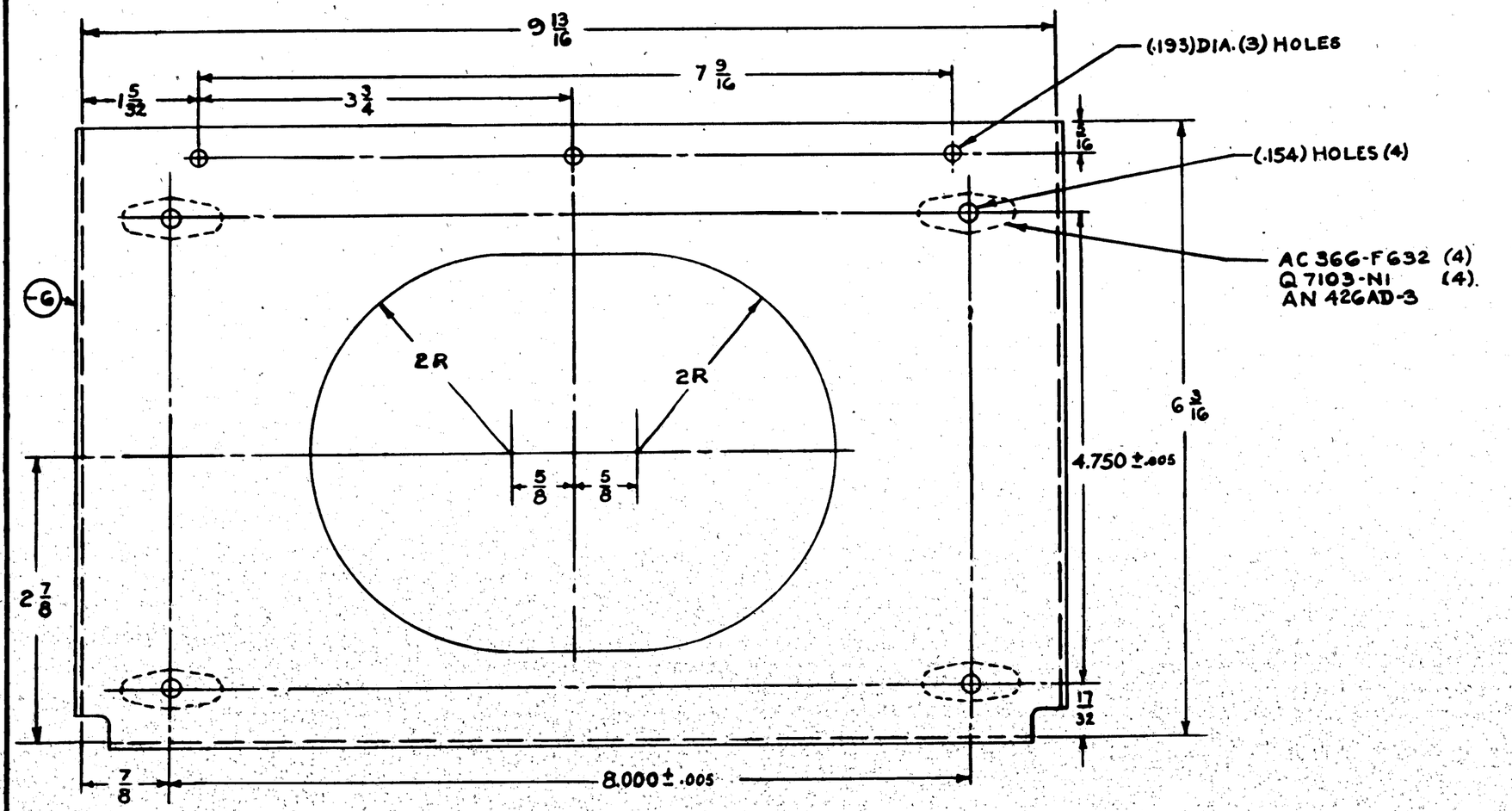

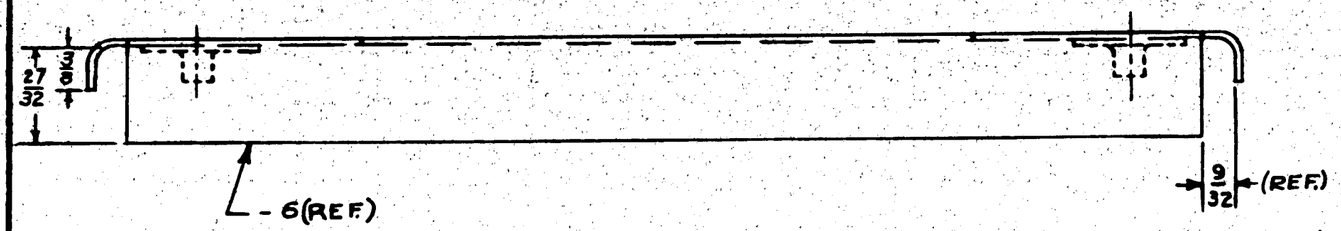

MC.R270-7

ALL BEND RADII 9/32 ALL RELIEF RADII 1/8

APPROVED FOR TOOLING BY Gardiner 6-26-43

ASSY. DASH NO.	MODEL	NEXT ASSY.	REQ.
	PBY-5A	28F7606	1

REQUIREMENTS PER AIRPLANE

REPLACES — .38* CALC. WT.

REPLACED BY — ACT. WT.

SCALE 12"—1'-0"

STAMP PART NUMBER WHERE SHOWN

PART No.	STOCK	MATERIAL	SPEC.	LH REQ. -0	RH REQ. -2	LH REQ. -3	RH REQ. -4	LH REQ. -5	RH REQ.
Q7103-N1							4		
AC366-F632							4		
AN426AD3									
●	.064X10¾X7⅝	ALCLAD	QQA362-T						

PARTS LIST PER ASSY.

AC		HLAVIN						
NAVY NONE	Z-P-GP	6-18-43	6-19-43					
HEAT TREAT	FINISH	DRAFT	CHECK	STRUCT	MAT	APPROV	ENG.	

NAME SUPPORT ASSEMBLY ASB CONTROL

OPP. HAND

CONSOLIDATED VULTEE AIRCRAFT CORP. WF SAN DIEGO DIVISION . . SAN DIEGO, CALIF.

DWG. SIZE D — 28F7607

R 28F7607

LET	ALTERATION	DATE	BY

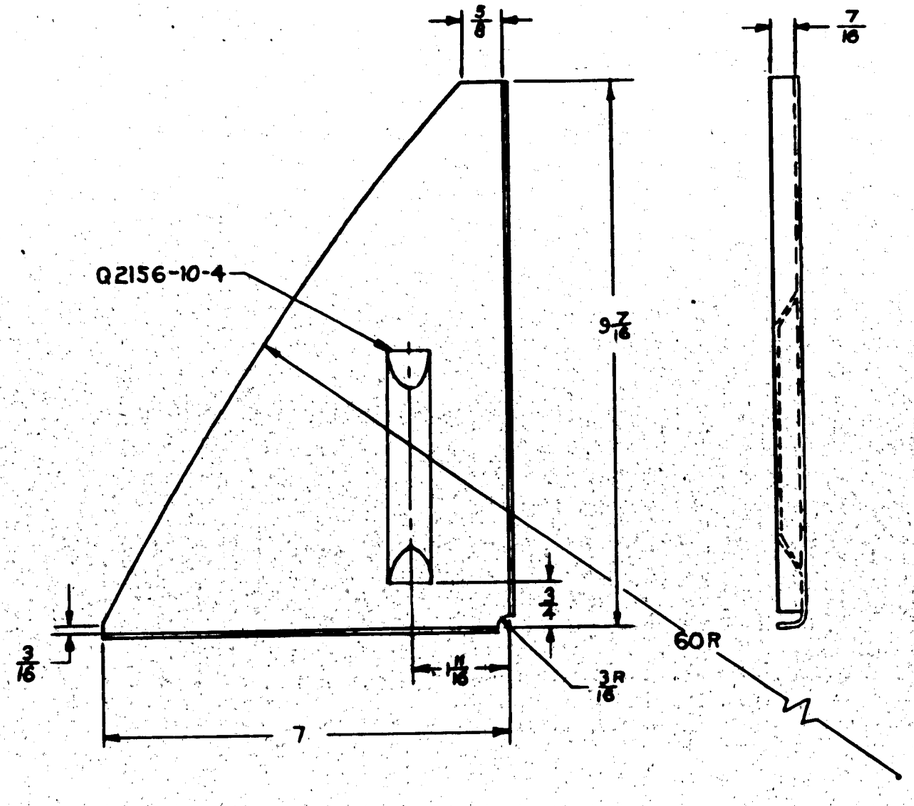

NOTE:
ALL BEND RADII 3/16

A.C.A. 270-1-1

ASSY. DASH NO.	MODEL	NEXT ASSY.	REQ'D.
-R	PBY-5A	28F7620	1
-L	PBY-5A	28F7620	1

REQUIREMENTS PER AIRPLANE

REPLACES
CALC. WT. .90
REPLACED BY
ACT. WT.

LIMIT OF DIMENSIONS UNLESS OTHERWISE SPECIFIED ± 1/32
SCALE 6" = 1'-0"
STAMP PART NUMBER WHERE SHOWN

PART NO.	STOCK	MATERIAL	SPEC.	LH REQ.	RH REQ.	LH REQ.	RH REQ.	LH REQ.	RH REQ.	LH REQ.	RH REQ.	LH REQ.	RH REQ.
				-0		-2		-3		-4		-5	
-6	072 X 7 5/8 X 10 1/8	ALCLAD	QQ-A-362-II										

PARTS LIST PER ASSY.

AC / NAVY		STEWART						
NONE	ZP-GP	6-21-43	2-13-43					
HEAT TREAT	FINISH	DRAFT	CHECK	STRUCT	MAT	APPROV	ENG.	

NAME GUSSET-ASB ANTENNA
OPP. HAND 28F7614-R
DWG. SIZE D
28F7614

CONSOLIDATED VULTEE AIRCRAFT CORP. SAN DIEGO DIVISION . . SAN DIEGO, CALIF.

APPROVED FOR TOOLING BY Gorsline 7-11-43

R 28F7614

NCR 270-1-1

LET	ALTERATION	DATE	BY
A	ON FACE OF DWG. IN PLAN VIEW REMOVED ½ DIM. & ADDED 25° ANGLE DIM. NO WTCHG	8-4-43	LEESE

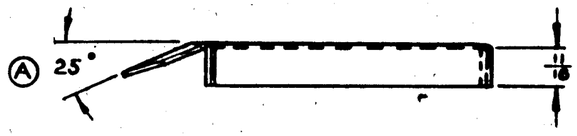

SECTION A-A

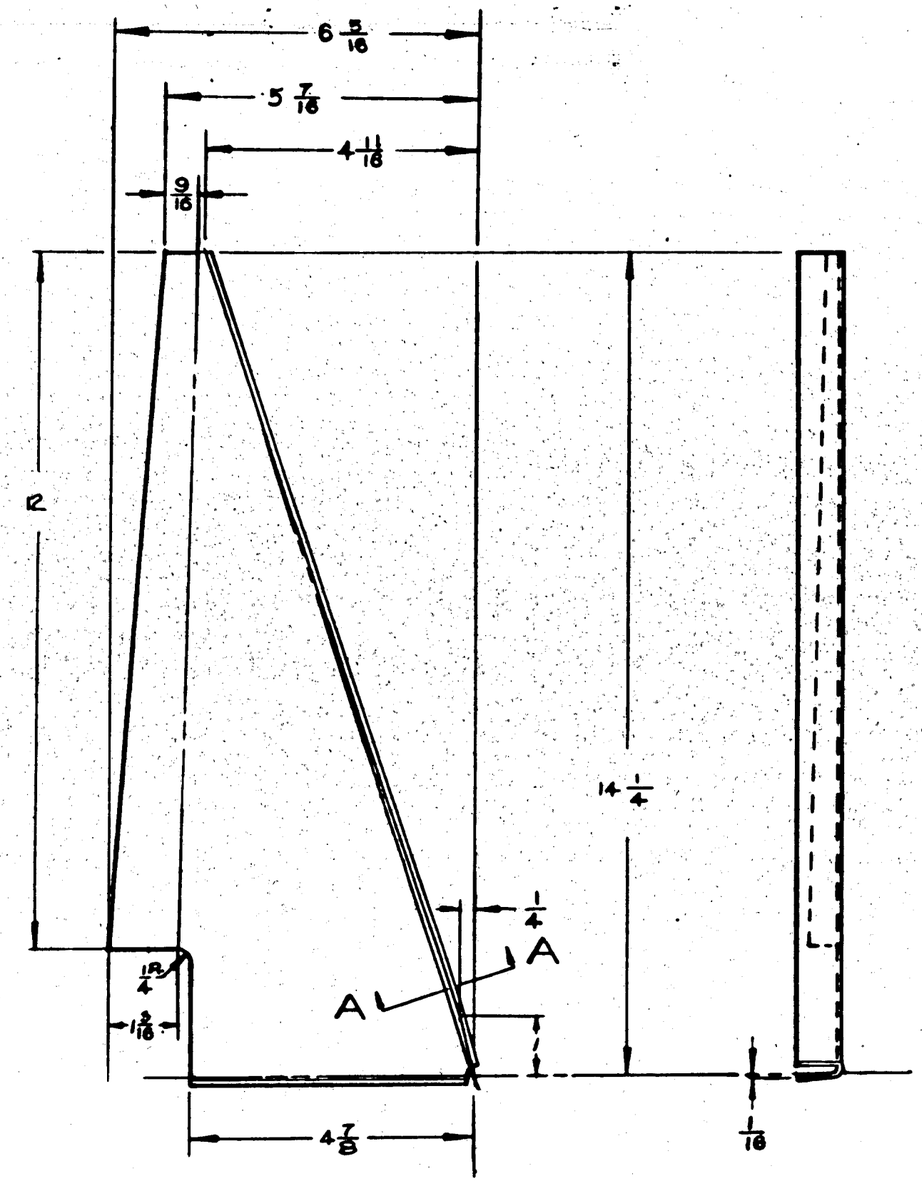

A.C.A. 270-1-1

	MODEL	NEXT ASSY.	QTY.
-R	PBY-5A	28F7620	1
-L	PBY-5A	28F7620	1

ASSY. DASH No.

REQUIREMENTS PER AIRPLANE

REPLACES	.32 CALC. WT.
REPLACED BY	ACT. WT.
± 1/32	SCALE 6"=1'-0"

STAMP PART NUMBER WHERE SHOWN

NOTE –
ALL BEND & RELIEF

APPROVED FOR TOOLING BY
Gorsline 7-11-43

PART No.	STOCK	MATERIAL	SPEC.	LH REQ.	RH REQ.	LH REQ.	RH REQ.	LH REQ.	RH REQ.	LH REQ.	RH REQ.	LH REQ.	RH REQ.
	.064 X 7 15/16 X 14½	ALCLAD SHT	QQ-A-362-II										
PARTS LIST PER ASSY.				-0		-2		-3		-4		-5	

AC		SCHEDULE					
NAVY NONE	Z-P-GP	6-29-43	7-8-43				
HEAT TREAT	FINISH	DRAFT	CHECK	STRUCT	MAT	APPROV	ENG.

NAME BRACE - ASB ANTENNA - LOWER

OPP. HAND 28F7617-R

CONSOLIDATED VULTEE AIRCRAFT CORP. SAN DIEGO DIVISION . . . SAN DIEGO, CALIF.

DWG. SIZE D 28F7617

ACME 222

R 1191-182

LET	ALTERATION	DATE	BY
A	ON FACE 15/16 WAS 7/8, 2 1/2 WAS 2 7/8, 3 7/8 WAS 4 1/8. WT. CHG N.E.G.	8-20-43	[illegible]

#B22447

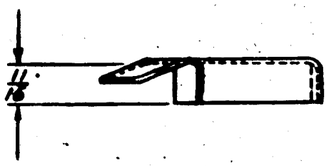

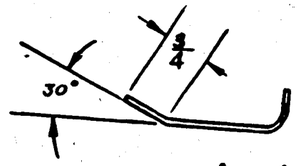

SECTION A—A

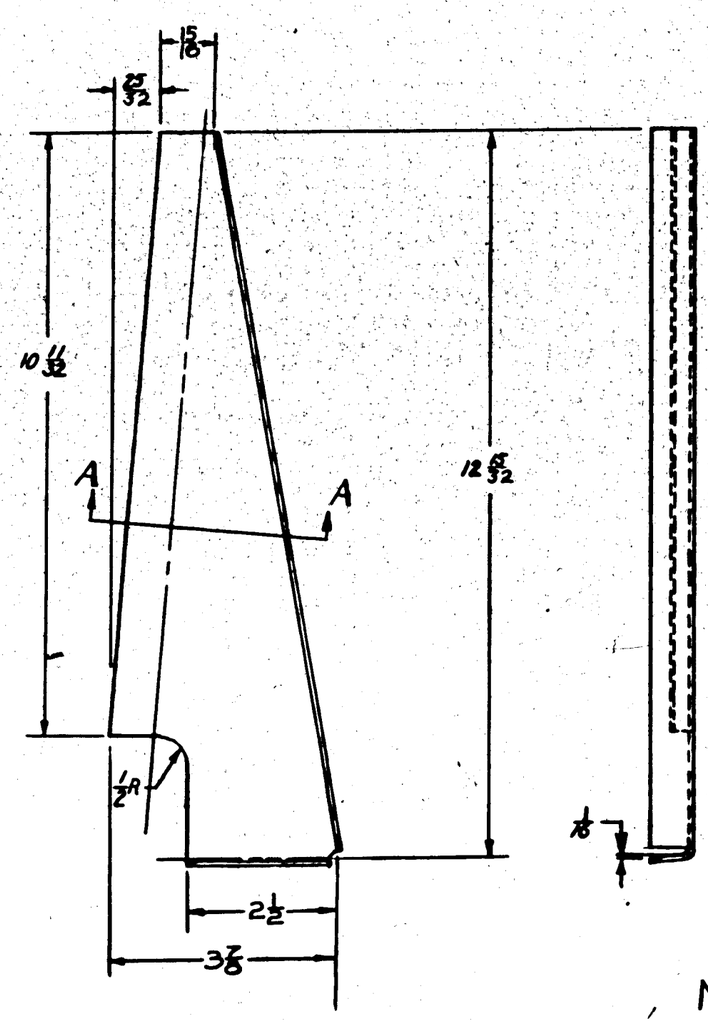

A.C.A. 270-1-1

ASSY. DASH No.	MODEL	NEXT ASSY.	QTY.
-R	PBY-5A	28F7620	1
-L	PBY-5A	28F7620	1

REQUIREMENTS PER AIRPLANE

REPLACES	.25 CALC. WT.
REPLACED BY	ACT. WT.
UNLESS OTHERWISE SPECIFIED ± 1/32 ANGLES ± 1/2°	SCALE 6" = 1'0"

STAMP PART NUMBER WHERE SHOWN

PART No.	STOCK	MATERIAL	SPEC.
	.064 x 15/16 x 13 3/8	ALCLAD SHT.	QQ A 362-ST

PARTS LIST PER ASSY.

LH REQ.	RH REQ.	LH REQ.	RH REQ.	LH REQ.	RH REQ.	LH REQ.	RH REQ.	LH REQ.	RH REQ.
		-0		-2		-3		-4		-5

NOTE—
ALL BEND & RELIEF RADII 1/8

APPROVED FOR TOOLING BY GORSLINE 7-11-43

AC
NAVY NONE
HEAT TREAT

Z-P G-P
FINISH

HYMAN [illegible] 6/25/43 7/13/43 [illegible]

DRAFT	CHECK	STRUCT	MAT	APPROV	ENG.

NAME BRACE — ASB
ANTENNA — UPPER

OPP. HAND 28F7618-R

CONSOLIDATED VULTEE AIRCRAFT CORP. SAN DIEGO DIVISION . . SAN DIEGO, CALIF.

DWG. D 28F7618

R 28F7618

LET	ALTERATION	DATE	BY

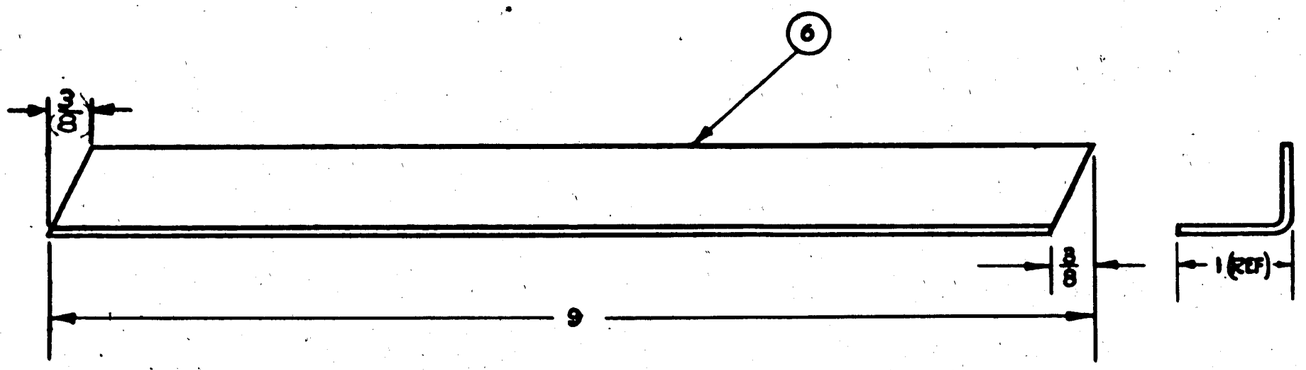

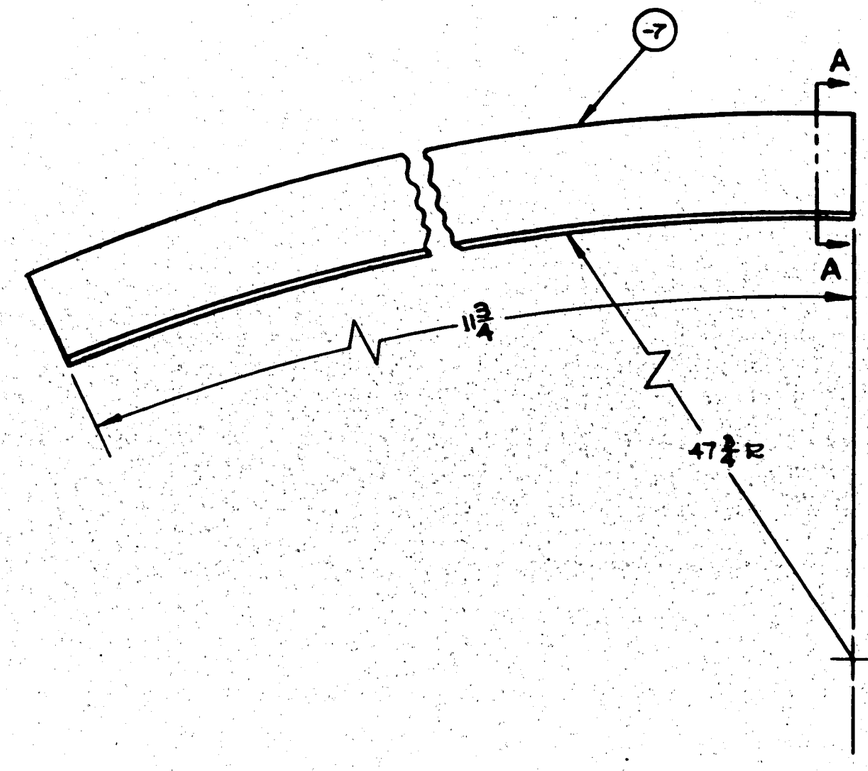

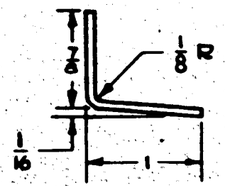

VIEW AA

MCR 270-4

APPROVED FOR TOOLING BY Gerstine 7-6-43

-7	PBY-5A	28F7627	
-6	PBY-5A	28F7627	
ASSY. SASH NO.	MODEL	NEXT ASSY.	SER.

REQUIREMENTS PER AIRPLANE

REPLACES -5: .07 -7: .4 Cubic In.

REPLACED BY ASST. WT.

SCALE 12" = 1'-0"

± 1/32

STAMP PART NUMBER WHERE SHOWN

PART No.	STOCK	MATERIAL	SPEC.	LH REQ.	RH REQ.	LH REQ.	RH REQ.	LH REQ.	RH REQ.	LH REQ.	RH REQ.	LH REQ.	RH REQ.
	-7 .051 X 2 1/8 X 12	ALCLAD	QQA-362-II										
	-6 Y6-A22T X 9 1/4												

PARTS LIST PER ASSY. -0 -2 -3 -4 -5

AC

NAVY NONE

HEAT TREAT

ZP-GP

FINISH

ENGINEER 6-28-43

DRAFT 7-7-43

CHECK

STRUCT

MAT

APPROV

ENG.

NAME ANGLE-ANTENNA SWITCH UNIT BRACKET MOUNTING

OPP. HAND NONE

CONSOLIDATED VULTEE AIRCRAFT CORP. SAN DIEGO DIVISION . . SAN DIEGO, CALIF.

SIZE D

28F7628

R 28F7628

MCR 22185

LET	ALTERATION	DATE	BY
A	IN REQ / AIRPLANE BLOCK CHANGED NEXT ASSY. FROM 28U3310 TO 28F6002 NO WT. CHG.	8-23-43	LAKE

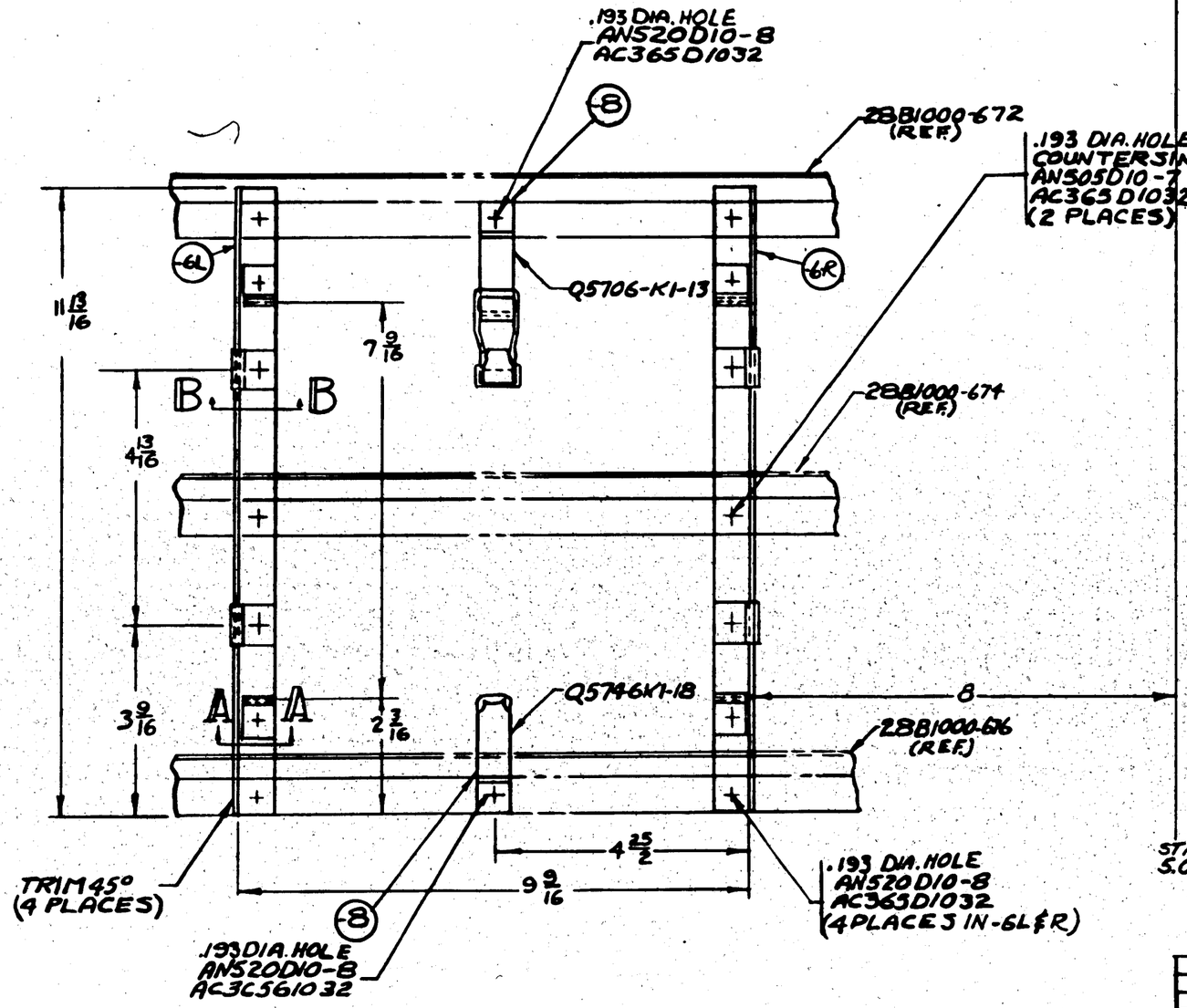

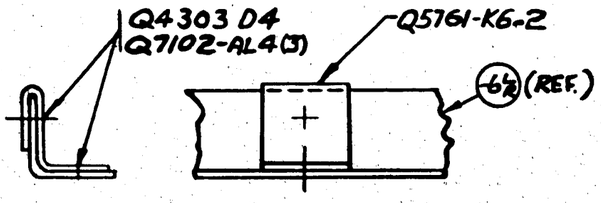

VIEW B-B
12" = 1'-0"
TYPICAL

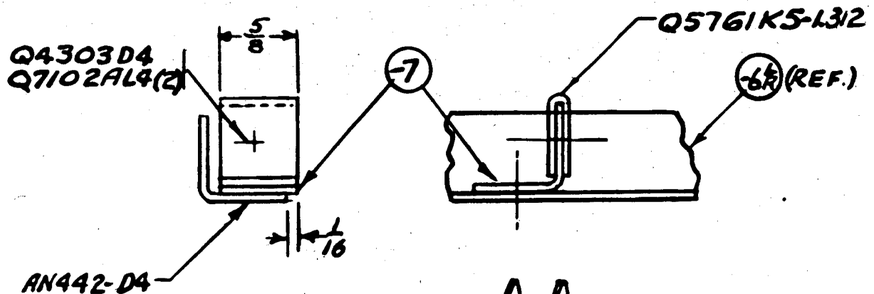

SECTION AA
12" = 1'-0"
TYPICAL

APPROVED FOR TOOLING BY
Gerline 7-7-43

					Q4303 D	4			20												
					Q7102-A	L4			1												
					Q5746 K1	-18			1												
					Q5706 -	K1-13			4												
					Q5761 K	5-1.312			4												
					Q5761-K	6-2			8												
					AC365D10	32															
					AN442 -	D4			6												
					AN520D	10-8			2												
	P8Y-5A	28F6002	1		AN505D	10-7															
ASSY. DASH NO.	MODEL	NEXT ASSY.	QTY.						2												
REQUIREMENTS PER AIRPLANE					-8	Y56A9TX3/4			4												
REPLACES		39 # CALC. WT.			-7	Y2-A27TX3/4			1												
REPLACED BY		ACT. WT.			-6R	Y2-A27TX12			1												
UNLESS OTHERWISE SPECIFIED DIMENSIONS ARE ± 1/32	SCALE 6"=1'-0" FULL SIZE				-6L	Y2-A27TX12			LH REQ.	RH REQ.	LH REQ.	RH REQ.	LH REQ.	RH REQ.	LH REQ.	RH REQ.	LH REQ.	RH REQ.	LH REQ.	RH REQ.	
STAMP PART NUMBER WHERE SHOWN					PART No.	STOCK	MATERIAL	SPEC.	PARTS LIST PER ASSY.												
									-0		-2		-3		-4		-5				

AC		6-25-43				
NAVY NONE	Z-P-GP	DRAFT	CHECK	STRUCT	MAT	APPROV	ENG.
HEAT TREAT	FINISH						

NAME STOWAGE - SPOTLIGHT

OPP. HAND

CONSOLIDATED VULTEE AIRCRAFT CORP. SAN DIEGO DIVISION . . . SAN DIEGO, CALIF.

DWG. SIZE D

28F7629

R

6297287

LET	ALTERATION	DATE	BY
	MCR 2104		
A	ON FINISH BLK Z-P-2DBL WAS Z-P-GP NO WT. CHG.	2-6-43	
B	ON FACE (SECT A-A) @ B16-D12-22 WAS @ B16-D12-22 NO WT. CHG.		
	D12-22 WAS Q816-12-22 NEW PT. CHG	4/26/43	MORRIS

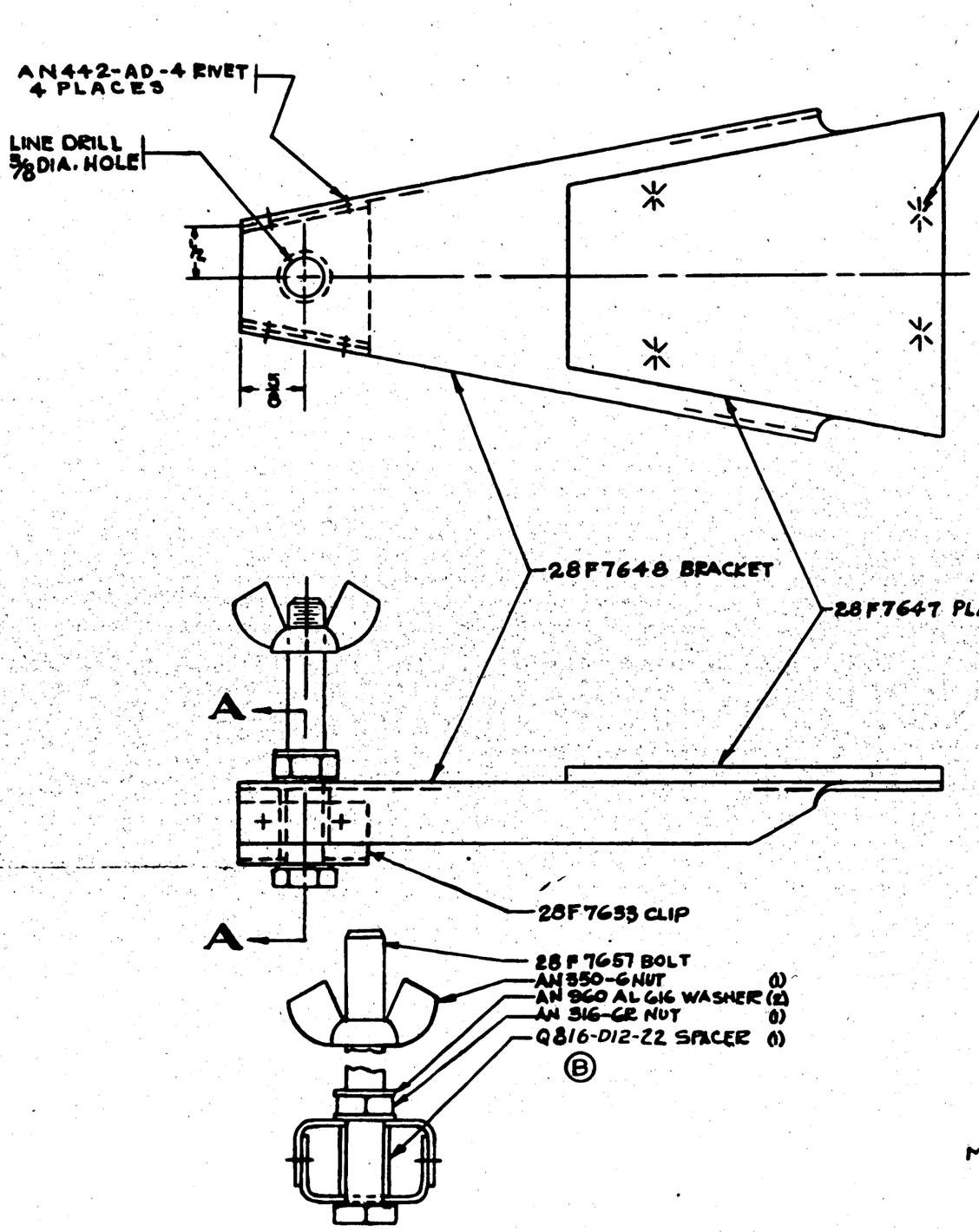

SECTION A-A

MCR 270-10

ASSY. DASH No.	MODEL	NEXT ASSY.	REQ'D
	PBY-5A	28F7632	2

REQUIREMENTS PER AIRPLANE

REPLACES

REPLACED BY

.49 CALC WT.

AST. WT.

SCALE 12" = 1'-0"

± 1/32

STAMP PART NUMBER WHERE SHOWN

PART No.	STOCK	MATERIAL	SPEC.	LH REQ. -0	RH REQ. -2	LH REQ. -3	RH REQ. -4	LH REQ. -5	RH REQ.
Q816-D12-22	SPACER								
AN442-AD-4									
AN960-A1616					2				
AN316-6R									
AN350-6									
28F7657									
28F7648									
28F7647									
28F7633									

PARTS LIST PER ASSY.

A.C.			7-2-43					
NAVY NONE	Z-P-2DBL	COLLINS						
HEAT TREAT	FINISH	DRAFT	CHECK	STRUCT	MAT	APPROV	ENG.	

NAME SUPPORT ASSEMBLY ASB REMOTE INDICATOR

OPP. HAND

CONSOLIDATED VULTEE AIRCRAFT CORP. SAN DIEGO DIVISION . . . SAN DIEGO, CALIF.

DWG. D SIZE

28F7630

APPROVED FOR TOOLING BY GORSLINE 7-16-43

* SPOTWELDING SYMBOL THIS SYMBOL INDICATES SPOTWELDING RIVETS ARE NOT INDICATED ON THIS DRAWING BY SYMBOLS

28F7630 R

LET	ALTERATION	DATE	BY

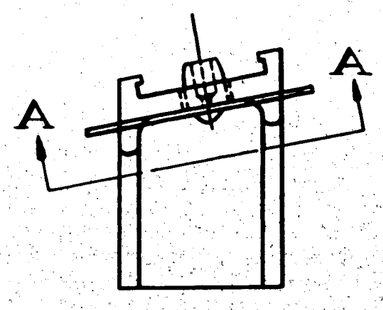

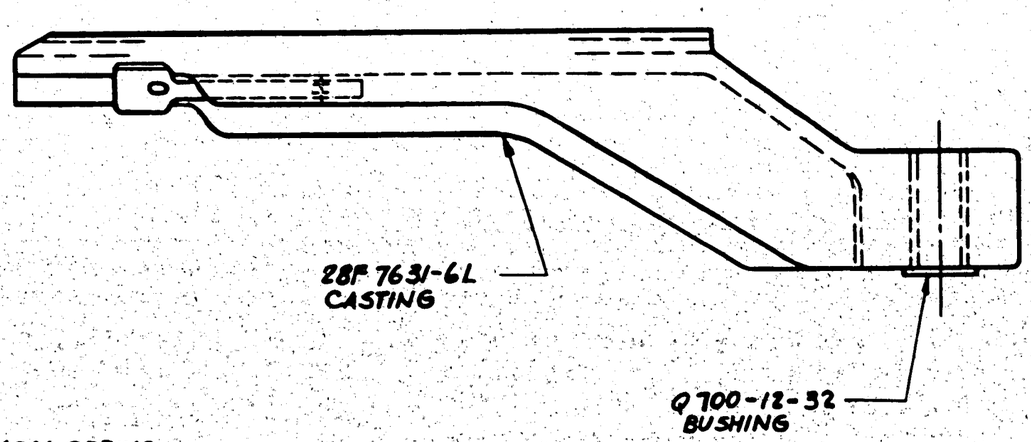

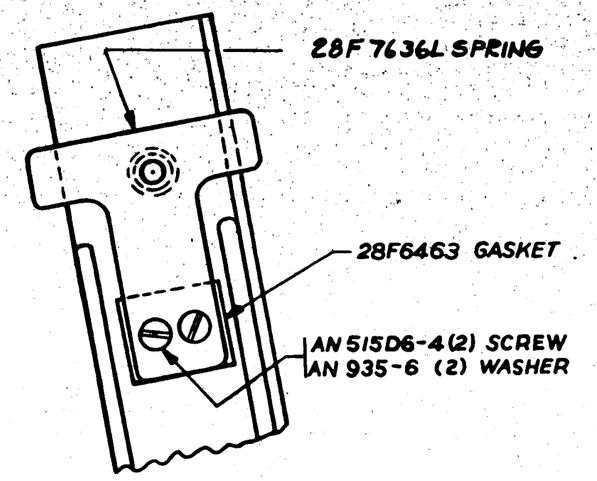

VIEW A-A

MCR. 270-10

APPROVED FOR TOOLING BY
Borsline 7-16-43

| | | |

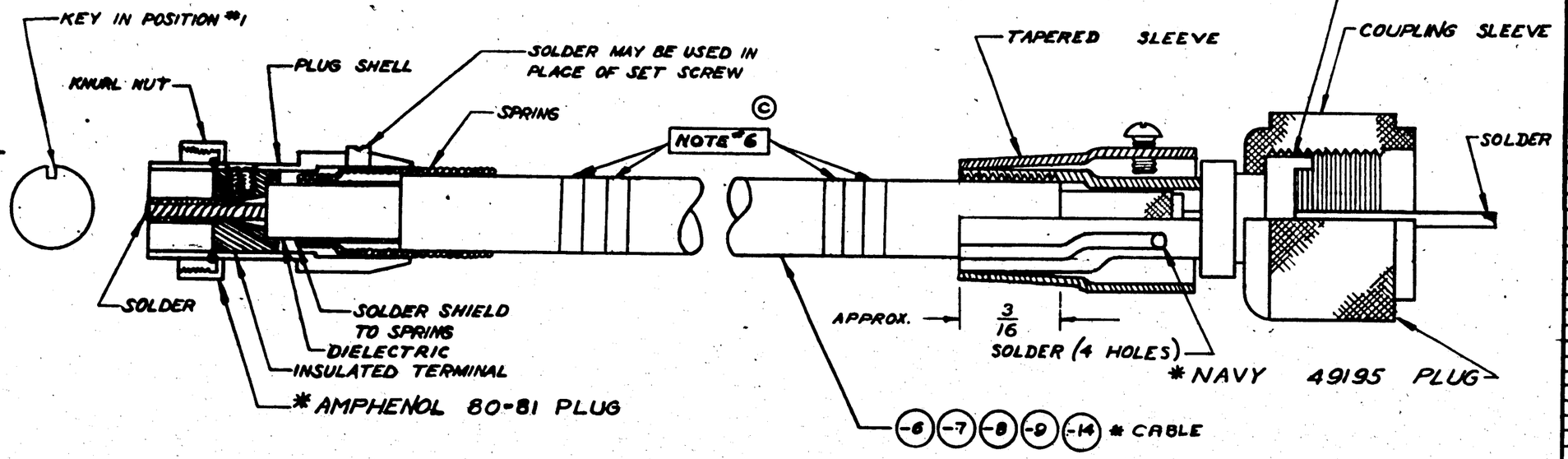

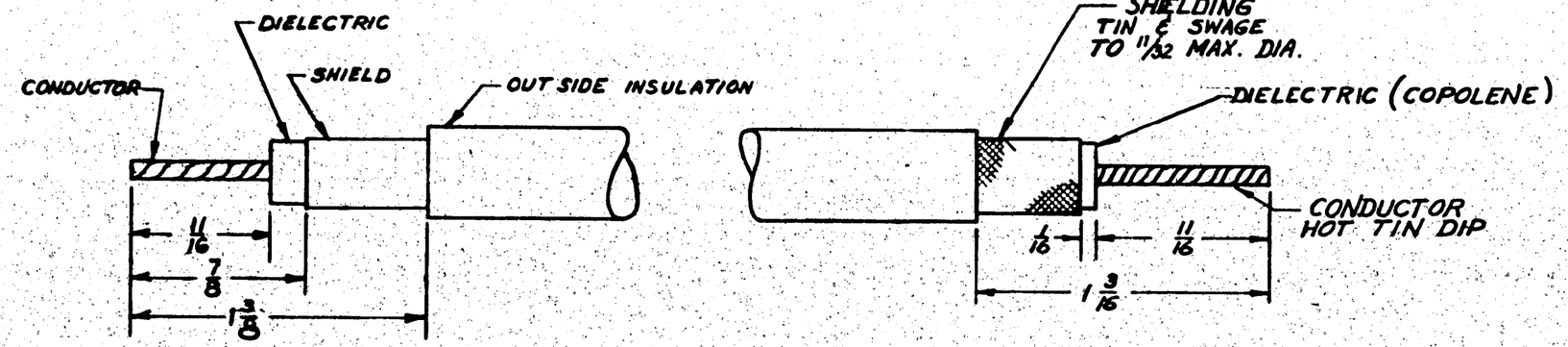

MCR #270C-1

LET	ALTERATION	DATE	BY
A	IN A/M TO -10 SUB ASSY ADDED * NAVY 49195 PLUG (1) REQ. * #16 CABLE x 82" WAS * #16 CABLE x 84". * AMPH. 80-81 PLUG (1) REQ. WAS * AMPH. 80-81 PLUG (2) REQ. TO -12 SUB ASSY ADDED * NAVY 49195 PLUG (1) REQ. * #16 CABLE x 77" WAS * #16 CABLE x 80". * AMPH 80-81 PLUG (1) REQ. WAS * AMPH 80-81 PLUG (2) REQ. IN -13 SUB ASSY * #16 CABLE x 42" WAS * #16 CABLE x 45" ADDED PARTS IN -15 SUB ASSY: * -14 CASSF-70-1 SINGLE COND. * #16 CABLE x 76 (1) REQ. * AMPH 80-81 PLUG (1) REQ. * NAVY 49195 PLUG (1) REQ. IN REQ. PER AIRPLANE BLOCK CHANGE -10 ASSY FROM (2) REQ TO (1) REQ. ADDED -15 - ADY-34 - 28F6955-1 ON FACE ADDED TO WT BLOCK -15 SUB ASSY WT. 58 FOR -10 SUB ASSY WT. 79 WAS .887. FOR -11 ASSY WT. 69 WAS .687. FOR -12 SUB ASSY WT. .68 WAS .703. FOR -13 SUB ASSY WT. .86 WAS .503 ON FACE AT STRIPPING DETAIL FOR * AMPHENOL 80-81 PLUGS (REF) WAS STRIPPING DETAIL TYPICAL BOTH ENDS: REMOVED RIGHT HAND PLUG VIEW & CALL OUT "AMPHENOL 80-81 PLUG (2)" & ADDED VIEW OF * NAVY 49195 PLUG. ADDED VIEW OF STRIPPING DETAIL FOR NAVY 49195 PLUG & -14 TO CABLE BRACKET WT BLOCK UP TO DATE	5-8-43	MTHAM
B	ON FACE OF DWG. ADDED NOTE 4. NO WT. CHG.	6-4-43	MTHAM
C	IN A/M CREATED SUB-ASSYS. -15 & -17 TAKE SAME AS -13 SUB ASSY. ADDED TO MTS PER AIRPLANE BLOCK -16 & -17 FOR PAY-5A 28F6955-1 EACH -13 FOR PAY-5A 28F6955-1 (WHITE) RESTRICTED -15 & -17 TO ASY 270-C-1 FOR ADD TO THE WTS. ADD -16 & -17 ADDED TO NOTES 3 & 10 BACK OF DWG. WT. CHG. NEG.	10-12-43	[illegible]

STRIPPING DETAIL FOR * AMPHENOL 80-81 PLUGS (REF.)

5. -15 SUB ASS'Y. CORRESPONDS TO (CONT.) CABLE #1 IN NAVY MANUAL (CPR 55ADO), -16 SUB ASS'Y. CORRESPONDS TO CABLE #9 IN NAVY MANUAL (ASB-6,4-7), -17 SUB ASS'Y. CORRESPONDS TO CABLE #10 IN NAVY MANUAL (ASB-6,4-7).
6. IN -10 SUB ASS'Y. WRAP CABLE 1" (APPROX.) FROM PLUG AT EACH END WITH 2 BANDS OF GREEN TAPE, 2 WRAPS OF TAPE IN EACH BAND, IN -11 SUB ASS'Y. WRAP CABLE 1" FROM PLUG AT EACH END WITH 2 WRAPS OF BLUE TAPE, IN -12 SUB ASS'Y. WRAP CABLE 1" (APPROX.) FROM PLUG AT EACH END WITH 2 BANDS OF YELLOW TAPE, 2 WRAPS OF TAPE IN EACH BAND, IN -13 SUB ASS'Y. WRAP CABLE 1" FROM PLUG AT EACH END WITH 2 WRAPS OF YELLOW TAPE, IN -15 SUB ASS'Y. WRAP CABLE 1" (APPROX.) FROM PLUG AT EACH END WITH 2 BANDS OF RED TAPE, 2 WRAPS OF TAPE IN EACH BAND, IN -16 SUB ASS'Y. WRAP CABLE 1" FROM PLUG AT EACH END WITH 2 WRAPS OF RED TAPE, IN -17 SUB ASS'Y. WRAP CABLE 1" FROM PLUG AT EACH END WITH 2 WRAPS OF GREEN TAPE. ©

STRIPPING DETAIL FOR * NAVY 49195 PLUG

NOTES:

1. ASTERISK (*) DENOTES GOVERNMENT FURNISHED EQUIP.
2. * AMPH. 218-255-1/30 - XV SINGLE COND. 7-#30 CABLE OR AS 48 CABLE MAY BE USED IN PLACE OF * CASSF-70-1 SINGLE COND. #16 CABLE. ©
3. GIVEN LENGTHS ARE APPROXIMATE. CORRECT LENGTH TO BE DETERMINED ON FIRST INSTALLATION & ENGINEERING NOTIFIED. MCR #270-C-1
4. THIS IS ATYPICAL. PLUG ASS'Y. INSERTS & BUSHINGS MAY BEAR DIFFERENT NUMBERS BECAUSE OF DIFFERENT VENDORS AND ARE NOT PHYSICALLY IDENTICAL. HOWEVER, ALL PLUG SHELLS & CLAMPS MUST HAVE THE SAME NUMBER. M.C.R. 270-11
5. -10 SUB ASS'Y. CORRESPONDS TO CABLE #3 IN NAVY MANUAL (CPR-55ADO), -11 SUB ASS'Y. CORRESPONDS TO CABLE #8 IN NAVY MANUAL (ASB-6,4-7), -12 SUB ASS'Y. CORRESPONDS TO CABLE #2 IN NAVY MANUAL (CPR-65ADO), -13 SUB ASS'Y. CORRESPONDS TO CABLE #7 IN NAVY MANUAL (ASB-6,4-7).

APPROVED FOR TOOLING BY Gasline 1-17-43

SUB ASS'Y. DASH NO'S.	WT.
-10	.79
-11	.69
-12	.76
-13	.51
-15	.75
-16	.47
-17	.51

ASSY. DASH No.	MODEL	NEXT ASSY.	QTY.
-17	ADY-34	28F6955	1
-16	ADY-34	28F6955	1
-15	PAY-5A	28F6955	1
-13	ADY-34	28F6955	1
-12	PAY-5A	28F6955	1
-11	PAY-5A	28F6955	1
-10	PAY-5A	28F6955	1

REQUIREMENTS PER AIRPLANE

REPLACES — NOTED CABLE WT.

REPLACED BY — ASY. WT.

SCALE SKETCH

STAMP PART NUMBER WHERE SHOWN

PART No.	STOCK	MATERIAL	SPEC.	LH REQ. -0	RH REQ. -2	LH REQ. -3	RH REQ. -4	LH REQ. -5	RH REQ.
PARTS LIST PER ASSY.									
	* AMPH 80-81 PLUG				2				
	* -9 CASSF-70-1 SINGLE COND. * 16 CABLE x 44				1				
	PARTS IN -17 SUB ASS'Y.								
	* AMPH 80-81 PLUG					2			
	* -9 CASSF-70-1 SINGLE COND. * 16 CABLE x 44					1			
	PARTS IN -16 SUB ASS'Y								
	* NAVY 49195 PLUG						1		
	* AMPH 80-81 PLUG						1		
	* -14 CASSF-70-1 SINGLE COND. * 16 CABLE x 76						1		
	PARTS IN -15 SUB ASSY								
	* AMPH 80-81 PLUG							2	
	* -9 CASSF-70-1 SINGLE COND. * 16 CABLE x 44							1	
	PARTS IN -13 SUB ASSY								
	* NAVY 49195 PLUG							1	
	* AMPH 80-81 PLUG							1	
	* -8 CASSF-70-1 SINGLE COND. * 14 CABLE x 77							1	
	PARTS IN -12 SUB ASSY								
	* AMPH 80-81 * PLUG							2	
	* -7 CASSF-70-1 SINGLE COND. * 14 CABLE x 68							1	
	PARTS IN -11 SUB ASSY								
	* NAVY 49195 PLUG							1	
	* AMPH 80-81 PLUG							1	
	* -6- CASSF-70-1 SINGLE COND. * 14 CABLE x 82							1	
	PARTS IN -10 SUB ASS'Y.								

AC		MATERIAL APPROVAL	
NAVY NONE	NONE	6-21-43	7-21-43
HEAT TREAT	FINISH	DRAFT	CHECK

STRUCT	MAT	APPROV	ENG.

NAME CABLES - R.F. COAXIAL - ASB

OPP. HAND NONE

CONSOLIDATED VULTEE AIRCRAFT CORP. SAN DIEGO DIVISION . . SAN DIEGO, CALIF.

SIZE D — 28F7638

LET	ALTERATION	DATE	BY
A	ON FACE OF DWG. ADDED NOTE 6. NO WT. CHG.	4-9-43	NYMAN
B	ON FACE & IN NOTE #1 ADDED -8 TO -6 CABLE. IN REQ. PER AIRPLANE BLOCK -7 (1) REQ WAS -0 (2) REQ. -9 ADDED. IN QTY ADDED -7 & -9 SUB ASSY. WT. CHG. -7 WAS #, -8 +.7#	9-10-43	NYMAN
C	ADDED NOTES 6 & 7. WT. CHG. NEG.	10-7-43	SPANGLER

MCR #270C-1

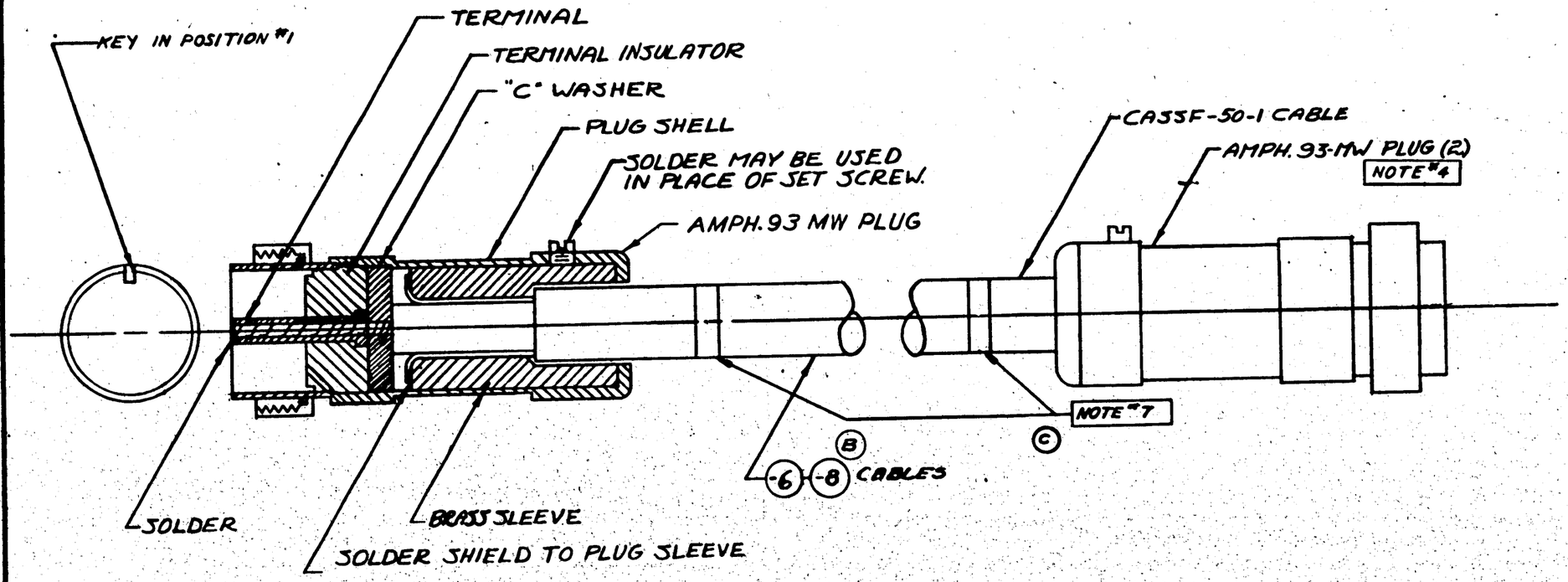

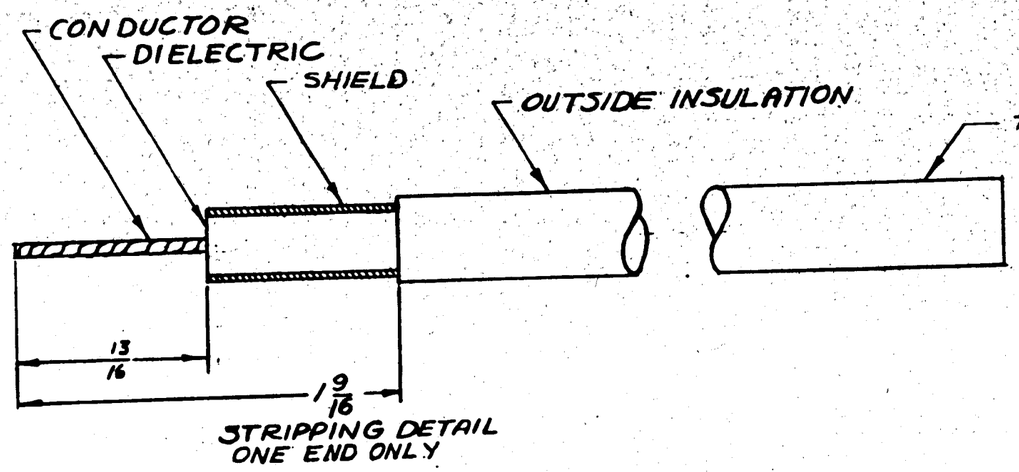

NOTES CONT.

© 6. -7 SUB ASS'Y. CORRESPONDS TO CABLE #11 IN NAVY MANUAL (ASB-6, & -7). -9 SUB ASS'Y. CORRESPONDS TO CABLE #12 IN NAVY MANUAL (ASB-6, & -7.)
7. IN -7 SUB ASS'Y. WRAP CABLE 1" FROM PLUG AT EACH END, WITH 2 WRAPS OF YELLOW TAPE. IN -9 SUB ASS'Y. WRAP CABLE 1" FROM PLUG AT EACH END, WITH 2 WRAPS OF BLUE TAPE.

NOTES:

1. IMPORTANT! LENGTH OF CABLES CRITICAL. HOLD LENGTH
(B) OF CABLES (-6 & -8) WITHIN 1/32 OF GIVEN LENGTH.
2. ASTERISK (*) DENOTES GOV'T. FURNISHED EQUIPMENT.
3. BEST GRADE OF *PT-5 CABLE MAY BE USED IN PLACE OF *CA33F-50-1 CABLE.
4. ASSEMBLE ONE PLUG ON STRIPPED END OF CABLE. TAPE SECOND PLUG TO OPPOSITE END OF CABLE.
(A) 5. THIS IS A TYPICAL PLUG ASSEMBLY. INSERTS & BUSHINGS MAY BEAR DIFFERENT NUMBERS BECAUSE OF DIFFERENT VENDORS AND ARE NOT PHYSICALLY IDENTICAL. HOWEVER, ALL PLUG SHELLS & CLAMPS MUST HAVE THE SAME NUMBER.

APPROVED FOR TOOLING BY Garsline 7-17-43

M.C.R. 270-1

ASSY. DASH NO.	MODEL	NEXT ASSY.	QTY.
-6	PAT-5A	28F6955	1
-7	PAT-5A	28F6955	1

REQUIREMENTS PER AIRPLANE

REPLACES — QTY. Next Assy.

REPLACED BY — Acy. Wy.

SCALE SKETCH

STAMP PART NUMBER WHERE SHOWN

PART NO.	STOCK	MATERIAL	SPEC.	LH RH REQ. -0	LH RH REQ. -2	LH RH REQ. -3	LH RH REQ. -4	LH RH REQ. -5
#	AMPHENOL-93-MW PLUG				2			
#-6	CA33F-50-1 CABLE X48				1			
-9	SUB ASSY							
#	AMPHENOL-93-MW PLUG				2			
#-6	CA33F-50-1 CABLE X40				1			
-7	SUB ASSY							

PARTS LIST PER ASSY. Dorman

AC — NAVY NONE — HEAT TREAT — NONE — FINISH

6-23-43 — DRAFT K. Fuller — CHECK — STRUCT — MAT — APPROV — ENG.

NAME CABLES-ASB ANT. SWITCHING UNIT TO RCV'R & TRANSM'TR

OPP. HAND NONE

CONSOLIDATED VULTEE AIRCRAFT CORP. SAN DIEGO DIVISION . . . SAN DIEGO, CALIF.

DWG. SIZE D — 28F7640

28F7640 P

LET	ALTERATION	DATE	BY
A	IN REQ/ASSY BLK. REM (R) WAS (I) NO WT. CHG.	7-27-43	
B	1 HOLE DIM. WAS 1 3/16 - 3 7/8 DIM. HOLE 3 3/8 - 6 7/8 DIM. WAS 7 - 1 1/8 DIM. WAS 1/8 NO WT. CHG.	9-27-43	
	IN M/M STOCK 7 WAS 7 1/8	9-27-43	

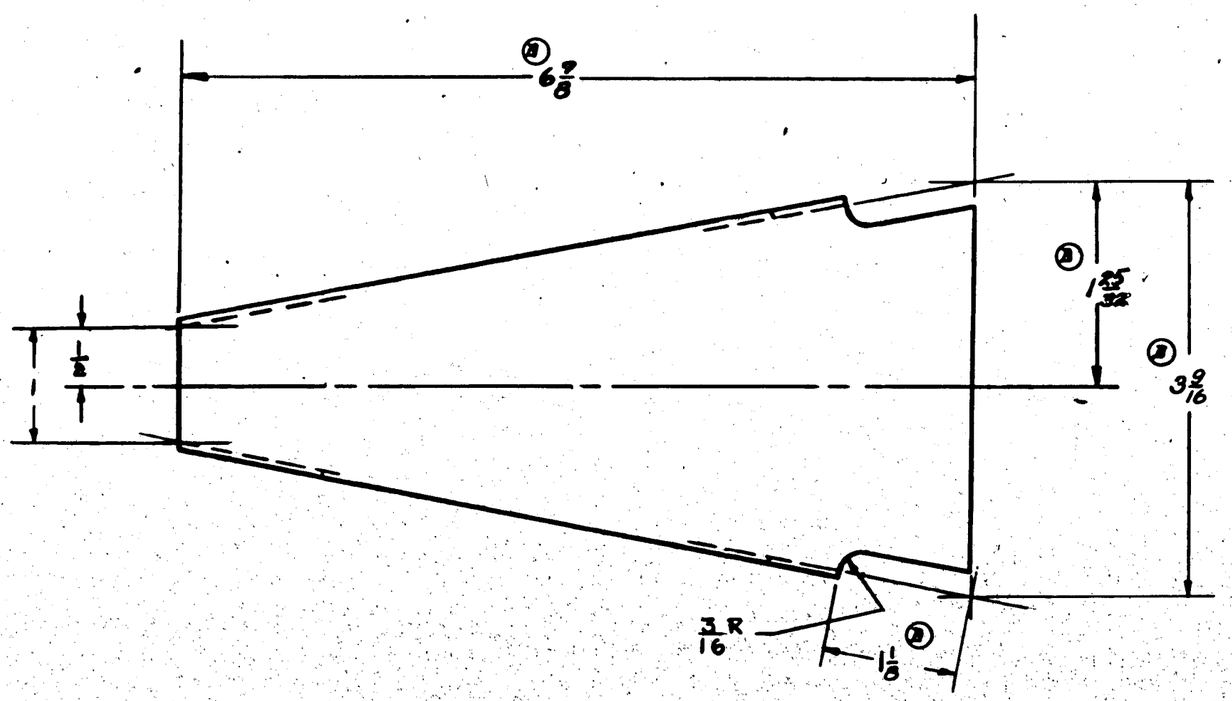

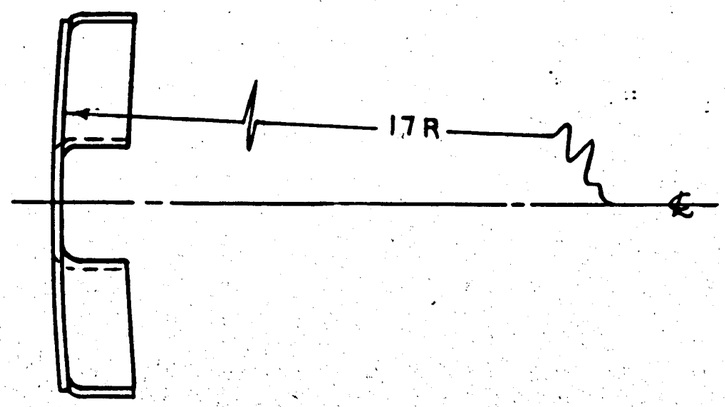

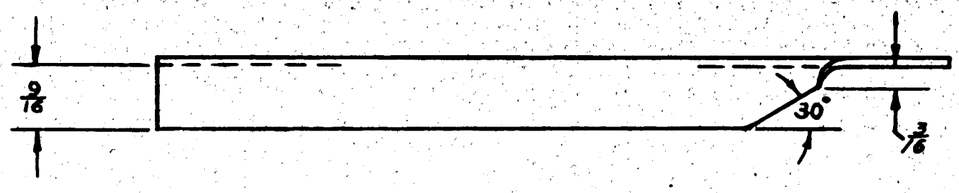

ALL BEND RADII TO BE 3/32 EXCEPT WHERE OTHERWISE NOTED.

MCR 270-10

APPROVED FOR TOOLING BY Gerstine 7-16-43

ASSY. BASH No.	MODEL	NEXT ASSY.	QUAN.
	PBY-5A	28F7630	2

REQUIREMENTS PER AIRPLANE

REPLACED: .18 CALC. WT.

REPLACED BY: ACT. WT.

UNLESS OTHERWISE SPECIFIED: SCALE 12" = 1'-0"; ± 1/64

STAMP PART NUMBER WHERE SHOWN

PART No.	STOCK	MATERIAL	SPEC.
PARTS LIST PER ASSY.	.072 X 4 1/8 X 7	ALCLAD	QQ-A-362-T

LH REQ.	RH REQ.	LH REQ.	RH REQ.	LH REQ.	RH REQ.	LH REQ.	RH REQ.	LH REQ.	RH REQ.
-0		-2		-3		-4		-5	

AC / NAVY NONE — HEAT TREAT: Z-P-GP — FINISH

7-1-43 — COLUMNS 7174 — DRAFT — CHECK — STRUCT — MAT — APPROV — ENG.

NAME: BRACKET- ASB REMOTE INDICATOR SUPPORT

CONSOLIDATED VULTEE AIRCRAFT CORP. SAN DIEGO DIVISION . . . SAN DIEGO, CALIF.

OPP. HAND

SIZE D — 28F7648

28F7648

R

LET	ALTERATION	DATE	BY

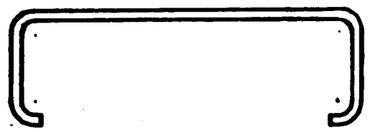

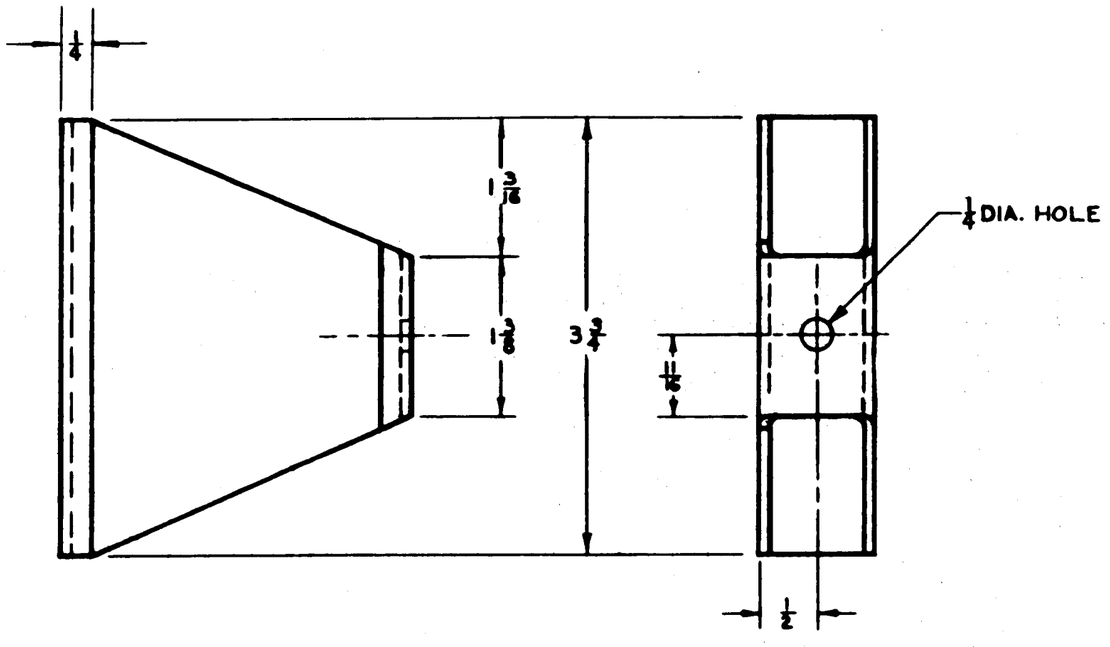

MCR 270-3 & ON

APPROVED FOR TOOLING BY
Carsline 7-17-43

ASSY DASH NO.	MODEL	NEXT ASSY.	REQ.
	PBY-5A	28F7649	2

REQUIREMENTS PER AIRPLANE

REPLACES — CALC WT. .08

REPLACED BY — ACT. WT.

UNLESS OTHERWISE SPECIFIED ± 1/32

SCALE 12" = 1'-0"

STAMP PART NUMBER WHERE SHOWN

PART NO.	STOCK	MATERIAL	SPEC.	LH REQ.	RH REQ.	LH REQ.	RH REQ.	LH REQ.	RH REQ.	LH REQ.	RH REQ.	LH REQ.	RH REQ.
	PARTS LIST PER ASSY.			-0		-2		-3		-4		-5	
-6	Y-12-A51Tx3 1/16												

AC		LENOIR	Anne	Eckel	Laird				
NAVY NONE	NONE	7-3-43	7-17-43			Norr			
HEAT TREAT	FINISH	DRAFT	CHECK	STRUCT	MAT	APPROV	ENG.		

NAME CHANNEL - ASB - UPPER MOUNTING

OPP. HAND NONE

CONSOLIDATED VULTEE AIRCRAFT CORP. SAN DIEGO DIVISION . . SAN DIEGO, CALIF.

DWG. SIZE D — 28F7651

R 28F7651

LTR	ALTERATION	DATE	BY

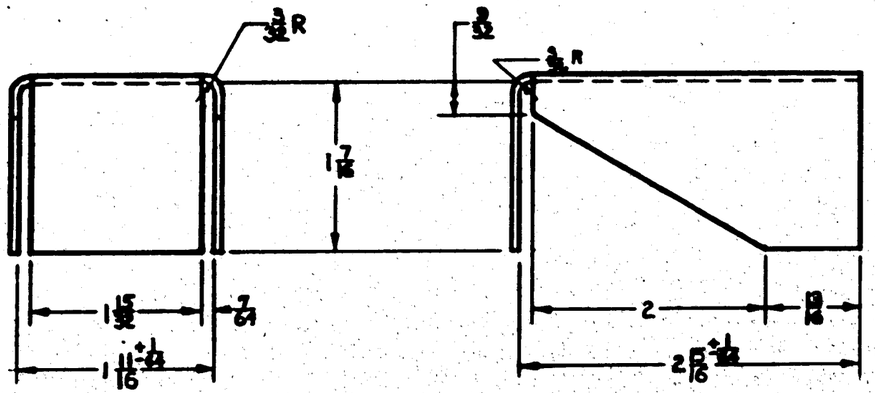

MCR 270-3 & ON

APPROVED FOR TOOLING BY Gerslune 7-17-43

ASSY. DASH NO.	MODEL	NEXT ASSY.	REQ'D
	PBY-5A	28F7649	1

REQUIREMENTS PER AIRPLANE

REPLACES — CALC. WT.

REPLACED BY — ACT. WT.

UNLESS OTHERWISE SPECIFIED ± 1/32 — SCALE 12"=1'-0"

STAMP PART NUMBER WHERE SHOWN

PART NO.	STOCK	MATERIAL	SPEC.	LH REQ.	RH REQ.	LH REQ.	RH REQ.	LH REQ.	RH REQ.	LH REQ.	RH REQ.	LH REQ.	RH REQ.
	.064 x 4 3/8 x 4 1/2	24ST ALCLAD	QQ-A-362 T										
	PARTS LIST PER ASSY.			-0		-2		-3		-4		-5	

AC		LENOIR							
NAVY NONE	NONE	7-3-43	7-17-43						
HEAT TREAT	FINISH	DRAFT	CHECK	STRUCT	MAT	APPROV	ENG.		

NAME STIFFENING BRACKET - ASB - UPPER MOUNTING

OPP. HAND NONE

CONSOLIDATED VULTEE AIRCRAFT CORP. WF SAN DIEGO DIVISION . . SAN DIEGO, CALIF.

DWG. SIZE D — 28F7652

R 28F7652

LET	ALTERATIONS	DATE	
A	REMOVE REAR FACE: ANGLE, .064 X 1 3/16 X 1 3/16 AL. ALLOY SHT. 24S SPEC. A7A10 CONDA-H.T. & R.S.S. CONDT - FINISH 2-P.W. INT. SPEC. 47A11 CONDT. WAS 47A10 CONDT. NO NOTCHES		

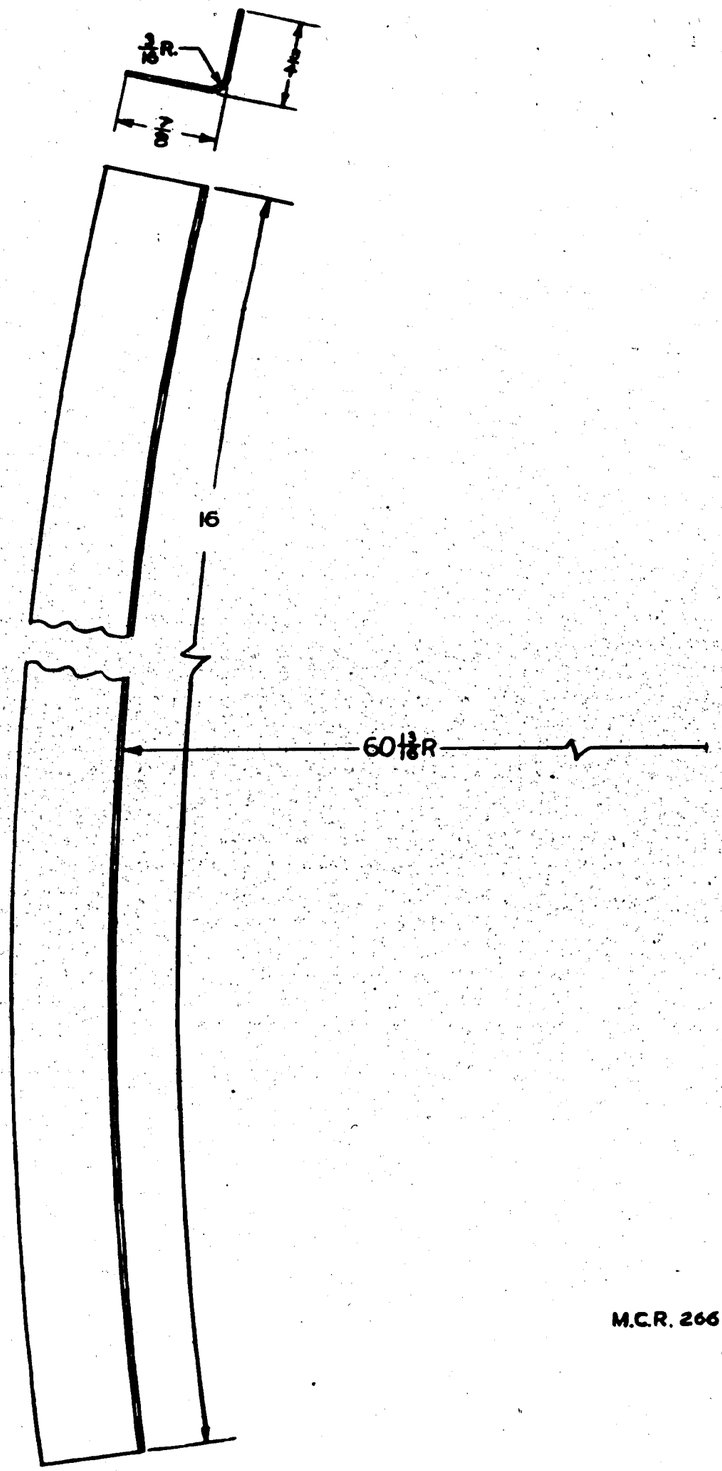

M.C.R. 266 & ON

APPROVED FOR TOOLING BY

June 7/21-43

ASSY. DASH NO.	MODEL	NEXT ASSY.	REQ.
-R	PBY-5A	28F4079	1
-L	PBY-5A	28F4079	1

REQUIREMENTS PER AIRPLANE

REPLACES	.166 CALC. WT.
REPLACED BY	ACT. WT.

LIGHT ON DRAWINGS UNLESS OTHERWISE SPECIFIED: ± 1/32 . SCALE 12"=1'0"

STAMP PART NUMBER WHERE SHOWN

PART NO.	STOCK	MATERIAL	SPEC.	LH REQ.	RH REQ.	LH REQ.	RH REQ.	LH REQ.	RH REQ.	LH REQ.	RH REQ.	LH REQ.	RH REQ.
	.064 X 1 3/16 X 1 3/16	ALCLAD 24S	STRAIGHT										
PARTS LIST PER ASSY.				-0		-2		-3		-4		-5	

AC		STRAIGHT						
NAVY NONE	NONE	7-17-43						
HEAT TREAT	FINISH	DRAFT	CHECK	STRUCT	MAT	APPROV	ENG.	

NAME ANGLE- REAR ENTRANCE LADDER REINFORCING

OPP. HAND 28F7679-R

SIZE D

28F7679

CONSOLIDATED VULTEE AIRCRAFT CORP. SAN DIEGO DIVISION . . SAN DIEGO, CALIF.

57-9/-183

LET	ALTERATION	DATE	BY

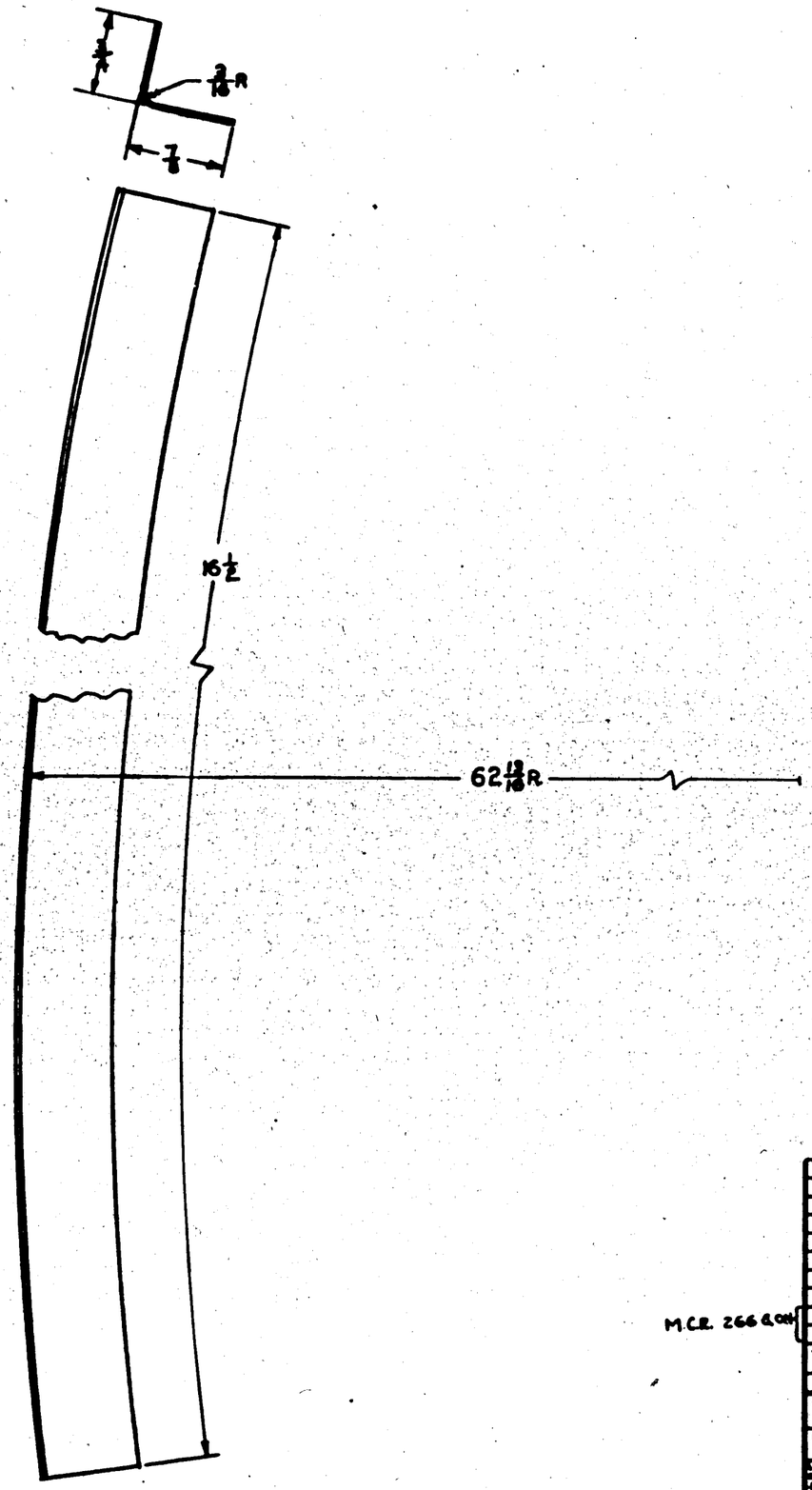

M.C.R. 266 & on

ASSY. DASH NO.	MODEL	NEXT ASSY.	REQ.
-R	PBY-5A	28F4075	1
-L	PBY-5A	28F4076	1

REQUIREMENTS PER AIRPLANE

REPLACES	J7R Quan. Wy.
REPLACED BY	Asy. Wy.
SCALE	12" = 1'-0"

STAMP PART NUMBER WHERE SHOWN

PART No.	STOCK	MATERIAL	SPEC.	LH REQ.	RH REQ.	LH REQ.	RH REQ.	LH REQ.	RH REQ.	LH REQ.	RH REQ.	LH REQ.	RH REQ.
	● .064X1¾X16½	AL. ALL. SHT.	4-7A10 CONDT										
PARTS LIST PER ASSY.				-0		-2		-3		-4		-5	

A C		STEWART			
NAVY NONE	NONE	7-17-43			
HEAT TREAT	FINISH	DRAFT	CHECK	STRUCT	MAT

NAME: ANGLE-REAR ENTRANCE LADDER

OPP. HAND 28F7680-R

CONSOLIDATED VULTEE AIRCRAFT CORP. SAN DIEGO DIVISION . . . SAN DIEGO, CALIF.

DWG. D SIZE 28F7680

APPROVED FOR TOOLING BY
7-21-43

R

28F7680

LET	ALTERATION	DATE	BY
A	3/16 FLANGE WIDTH WAS 5/16	8-W-43	SMITH

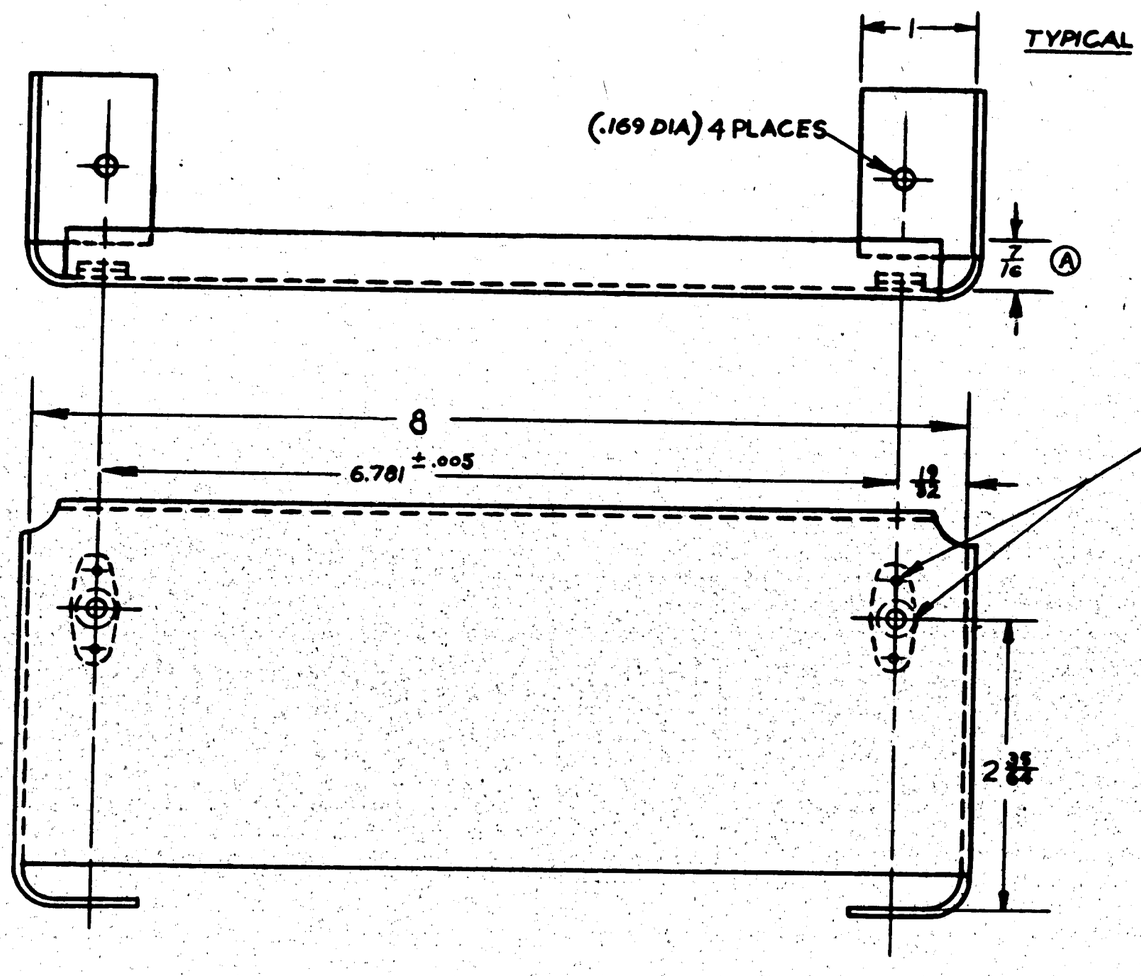

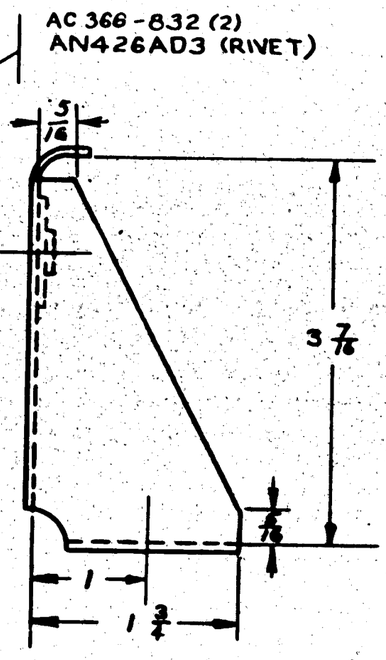

MCR #236-C

NOTE

ALL BEND RADII 3/32 R.

APPROVED FOR TOOLING BY

FRUE 7-30-43

LTR	ALTERATION	DATE	BY

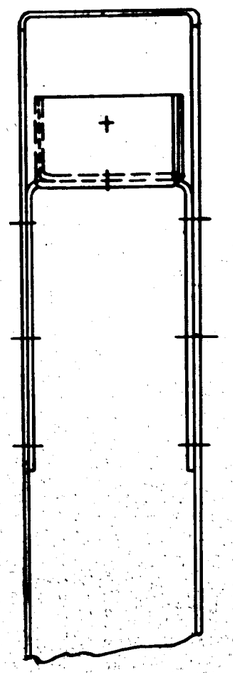

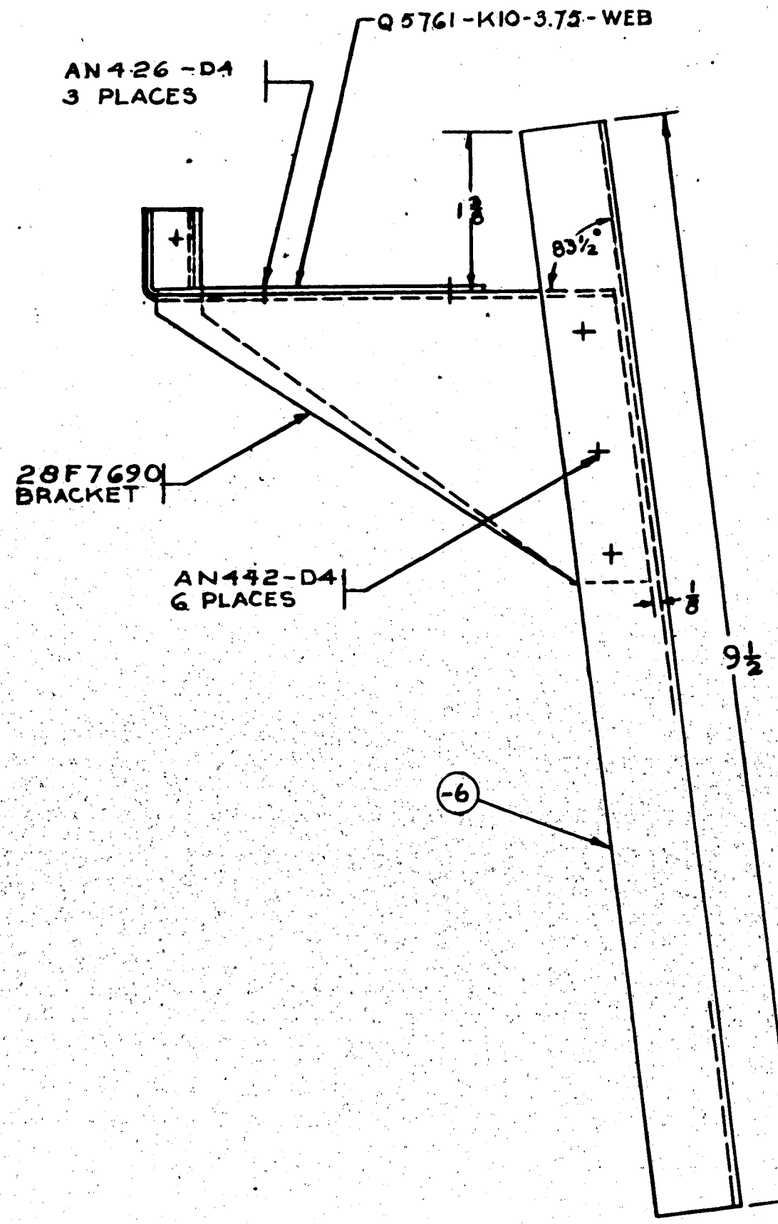

NOTE

FINISH -6, Z-P-6P.

APPROVED FOR
TOOLING BY
Gerslinger 8-18-43

MCR 199-B

ASSY. DASH No.	MODEL	NEXT ASSY.	QTY.
-0	PBY-5A	28F7688	1

REQUIREMENTS PER AIRFLANE

REPLACES	.18 CALC. WT.
REPLACED BY	ASS'D. WT.
LIMIT ON DIMENSIONS UNLESS OTHERWISE SPECIFIED ± 1/32	SCALE 12"=1'-0"
STAMP PART NUMBER WHERE SHOWN	

PART No.	STOCK	MATERIAL	SPEC.	LH REQ. -0	RH REQ. -0	LH REQ. -2	RH REQ. -2	LH REQ. -3	RH REQ. -3	LH REQ. -4	RH REQ. -4	LH REQ. -5	RH REQ. -5
AN442-D4													
AN426-D4													
Q5761-K10-3.75		WEBBING		1									
28F7690				1									
28F7689 -6	Y10-A69T x 9 5/8			1									

PARTS LIST PER ASSY. J.K. Kennedy

AC		8-10-43	Orig					
NAVY NONE	NOTED	COLLINS	8-10-43	8-10-43	8-10-43	8-10-43	8-10-43	8-10-43
HEAT TREAT	FINISH	DRAFT	CHECK	STRUCT	MAT	APPROV	ENG.	

NAME ASSEMBLY - REAR ENTRANCE LADDER STOWAGE BR'K'T AFT

OPP. HAND NONE

CONSOLIDATED VULTEE AIRCRAFT CORP. SAN DIEGO DIVISION . . SAN DIEGO, CALIF.

DWG. SIZE D

28F7689

R.

28F7689

LET	ALTERATION	DATE	BY

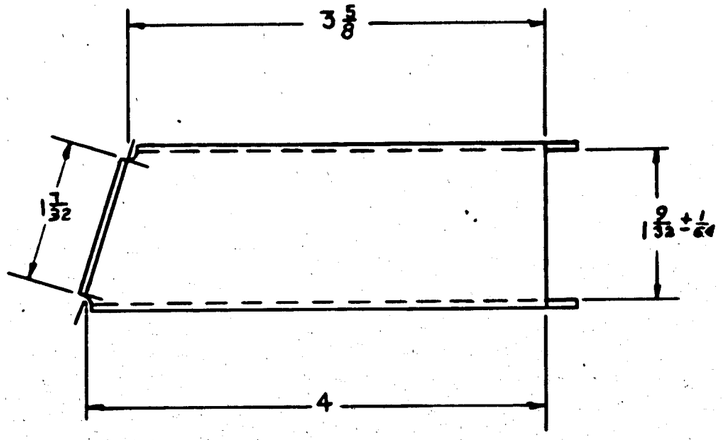

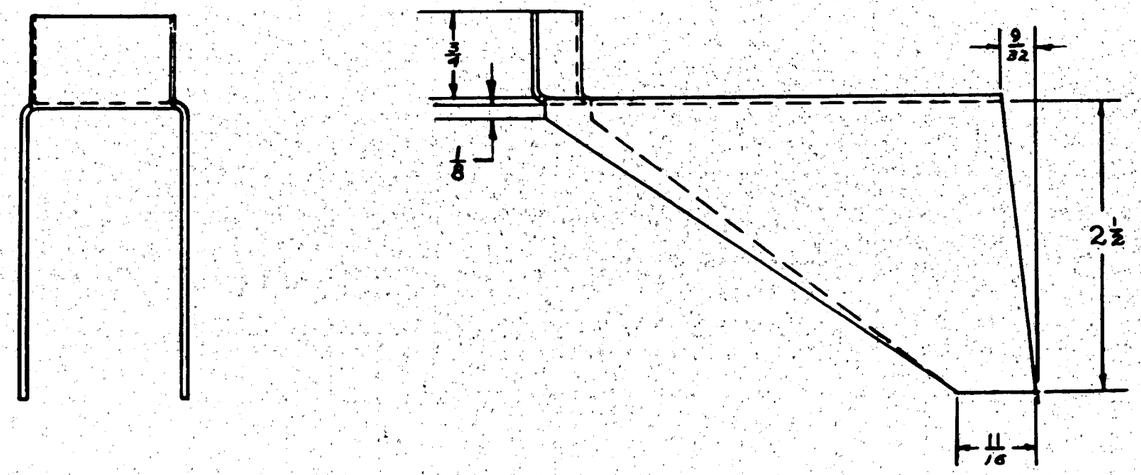

NOTE:
ALL BEND RADII ARE 1/16.

MCR 199-B

APPROVED FOR
TOOLING BY
Gerstine 4-18-43

LET	ALTERATION	DATE	BY

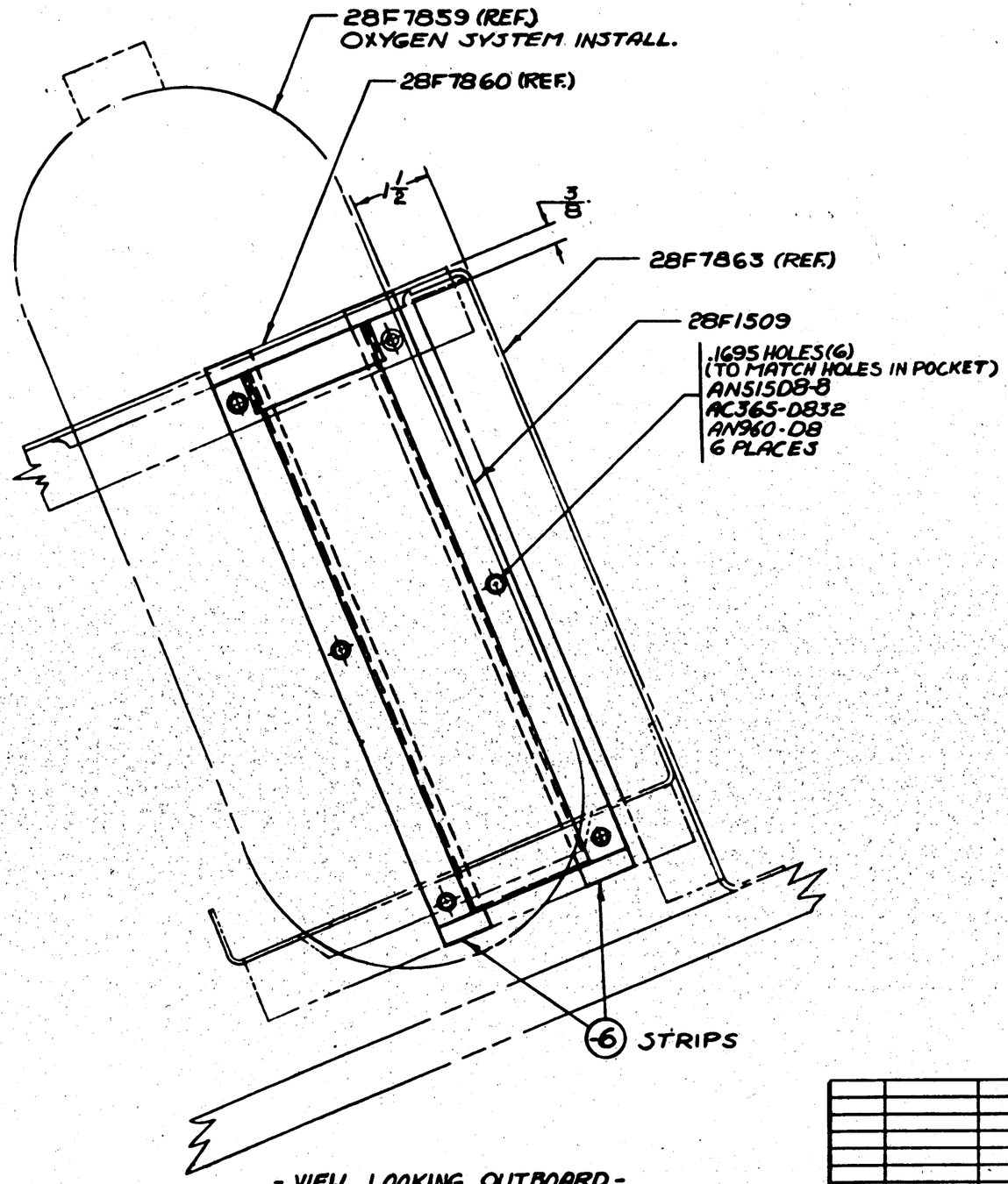

- VIEW LOOKING OUTBOARD -

10R2216-10

APPROVED FOR TOOLING BY
C Wells 9-9-43

ASSY. DASH NO.	MODEL	NEXT ASSY.	QUAN.
	PBY-5A	28F6002	1

REQUIREMENTS PER AIRPLANE

REPLACES — CALC. QTY. 64

REPLACED BY — ACT. QTY.

UNLESS OTHERWISE SPECIFIED ±1/32 — SCALE 6"=1'-0"

STAMP PART NUMBER WHERE SHOWN

PART NO.	STOCK	MATERIAL	SPEC.	LH REQ. -0	RH REQ. -0	LH REQ. -2	RH REQ. -2	LH REQ. -3	RH REQ. -3	LH REQ. -4	RH REQ. -4	LH REQ. -5	RH REQ. -5
AC365-D832				6									
AN960-D8				6									
AN515D8-8				6									
28F1509				1									
-8	.064x1 X12 1/2	AL. ALL. SHEET	4TA10-T	2									

PARTS LIST PER ASSY.

AC — NAVY NONE — HEAT TREAT — NONE — FINISH

8-24-43 French — DRAFT — CHECK — STRUCT — MAT — APPROV — ENG.

NAME INSTALLATION - SIGNAL FLAG POCKET

OPP. HAND

CONSOLIDATED VULTEE AIRCRAFT CORP. SAN DIEGO DIVISION . . SAN DIEGO, CALIF.

DWG. SIZE D — 28F7695

R

28F7695

LET	ALTERATION	DATE	BY

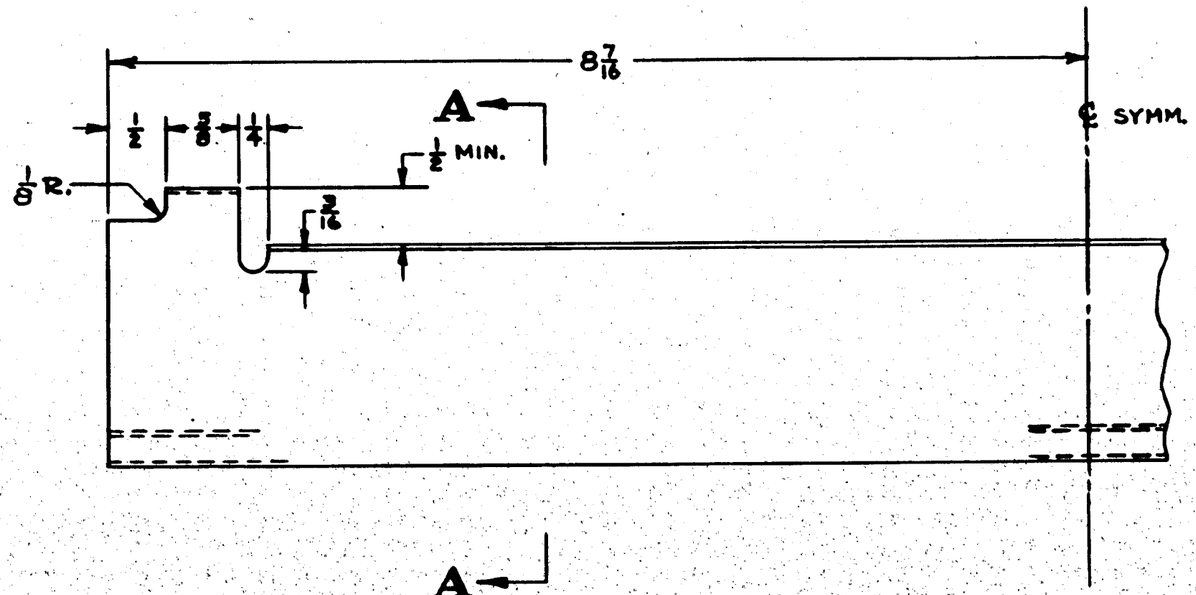

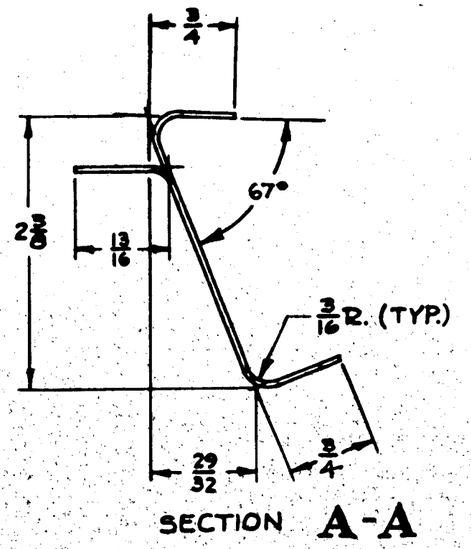

SECTION A-A

MCR #272A-1

APPROVED FOR TOOLING BY
June 9/11-43

ASSY. SASH No.	MODEL	NEXT ASSY.	QUAN.
	PBY-5A	28F7699	1

REQUIREMENTS PER AIRPLANE

REPLACED .24ST GAGE THY.

REPLACED BY ADV. THY.

UNLESS OTHERWISE SPECIFIED: ± 1/32 — SCALE 12" = 1'-0"

STAMP PART NUMBER WHERE SHOWN

PART No.	STOCK	MATERIAL	SPEC.
	.040 x 4 x 17	AL. AL. SHEET	47A10-T

PARTS LIST PER ASSY.

LH REQ.	RH REQ.	LH REQ.	RH REQ.	LH REQ.	RH REQ.	LH REQ.	RH REQ.	LH REQ.	RH REQ.
-0		-2		-3		-4		-5	

AC
NAVY NONE
HEAT TREAT

Z-P-GP
FINISH

HYMER 9-10-43
DRAFT | CHECK | STRUCT | MAT | APPROV | ENGR.

NAME CHANNEL-BOMBER'S SWITCH & INSTRUMENT PANELS SUPPORT

CONSOLIDATED VULTEE AIRCRAFT CORP. SAN DIEGO DIVISION . . SAN DIEGO, CALIF.

OPP. HAND NONE

DWG. SIZE D — DWG. 28F7706

R 80L-182

LET	ALTERATION	DATE	BY
A	IN REQ/AIRP. BLOCK N/A 28F-6812 WAS 28E6812. NO WT CHG.	3-12-43	[illegible]

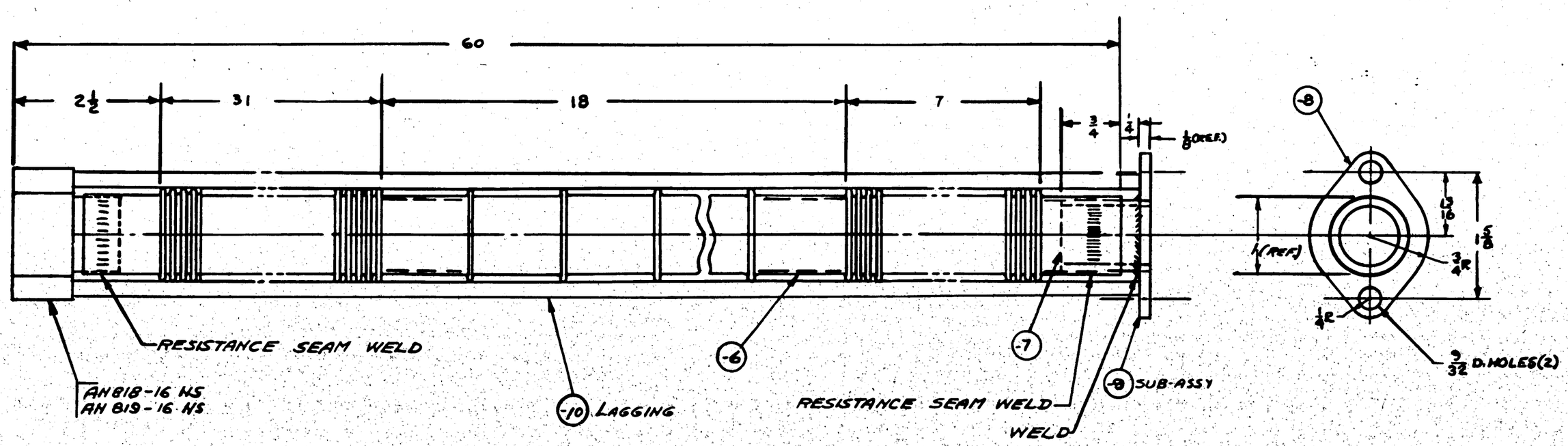

C.A.C *TU105 MAY BE PURCHASED FROM TUBULAR WEAVING CO. BURBANK, CALIF. % PACIFIC AIRMOTIVE - VENDORS NO. B1002N

28F7801 MAY BE PURCHASED FROM CHICAGO METAL HOSE CORP.

PURCHASE TO DWG.

M.C.R 84-4

ASSY. DASH No.	MODEL	NEXT ASSY.	QUAN.
	DAY-5	28F6812	1

REQUIREMENTS PER AIRPLANE

REPLACES 28F6851 — 1.2* CALC. WT.

REPLACED BY — ACT. WT.

UNLESS OTHERWISE SPECIFIED: SCALE

± 1/32

STAMP PART NUMBER WHERE SHOWN

PART No	STOCK	MATERIAL	SPEC.	LH REQ. -0	RH REQ. -2	LH REQ. -3	RH REQ. -4	LH REQ. -5	RH REQ.
-8	1.25 x 1.5/8 x 2 1/4	C.M.S.T.	AN-QQ-S-685	1					
-7	10 DIA. 12 OA 1 1/4	C.M.S.T. TUBE	AN-WW-T-850	1					
-9	SUB ASSY			1					
AN819-16	NS			1					
AN818-16	NS			1					
-10	1 1/4 DIA. x [illegible] GA	GLASS TUBING	S.AC* TU105	1					
-9	SUB-ASSY			1					
-6	1 1/8 DIA. 60	[illegible]	CRES.	1					

PARTS LIST PER ASSY.

AC		11-16-42					
NAVY NONE	NONE						
HEAT TREAT	FINISH	DRAFT	CHECK	STRUCT	MAT	APPROV	ENG

NAME ASSEM.-FURN.-EXHAUST TUBING CENTRAL HEATING SYSTEM

OPP HAND

CONSOLIDATED AIRCRAFT CORP. San Diego, Calif.

DWG D 28F7801

APPROVED FOR TOOLING BY
R.B. Humphreys 11-16-42

R 1/5/42

28F7801

	ALTERATION	DATE	BY
Q			
A	REMOVED 1/16 DIM. & ADDED 3/16		
	DIM. 11/32 DIM. WAS 1 1/8	4-15-42	
B	1 1/4 DIM. WAS 2. WT: - .70		
	WAS .43	8-18-42	

E.O. 84-131

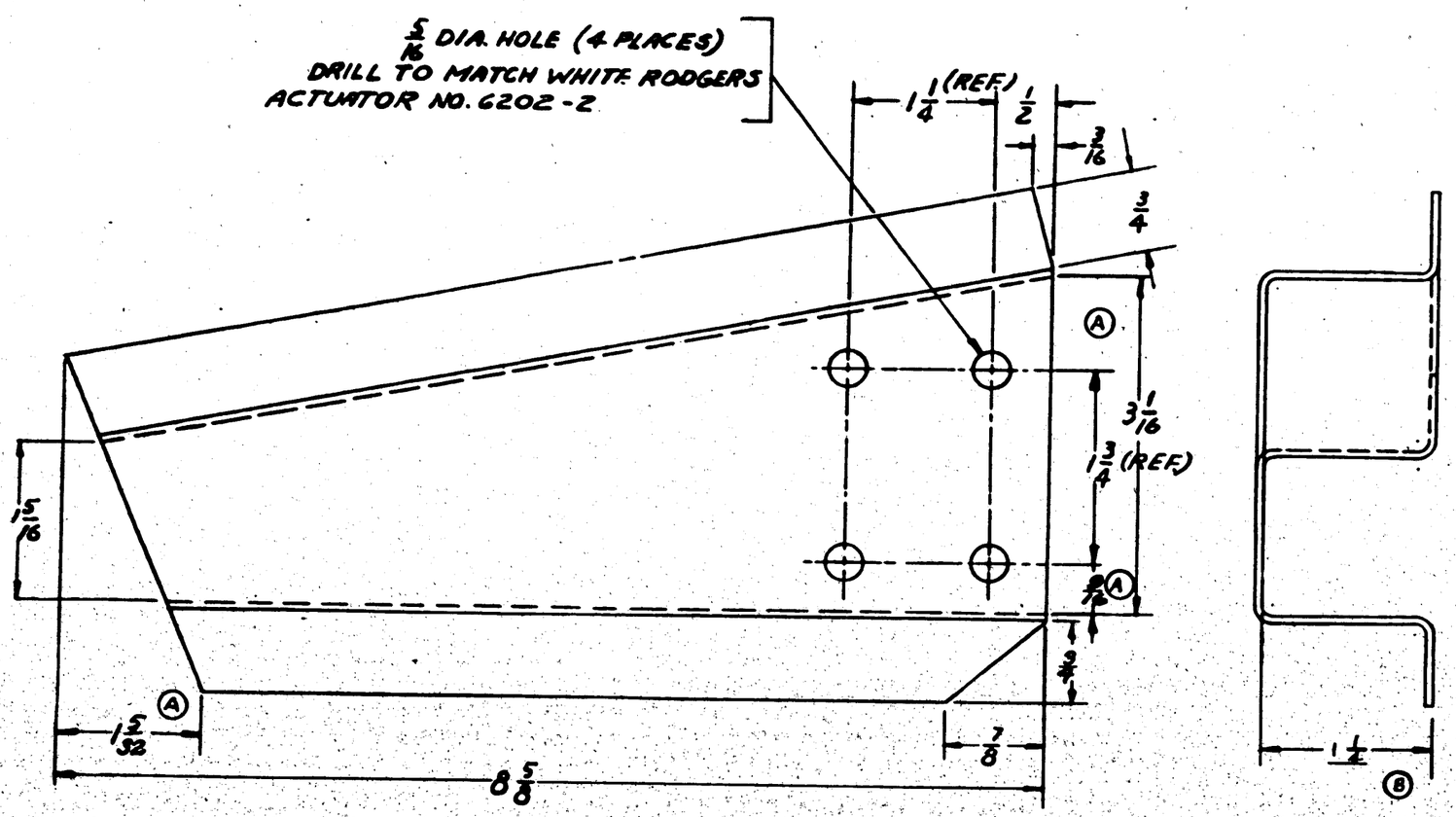

C-91876 #346 TO M.C.R. #23-10-1

-R	PBY-5	28F7811	1
-1	PBY-5	28F7811	1
ASSY. USED ON	MODEL	NEXT ASSY.	QTY.

REQUIREMENTS PER AIRPLANE

REPLACED	.43 Calc. Wt.
REPLACED BY	Act. Wt.
1/32	SCALE 12"/1'0"

SPECIFIED PART NUMBER WHERE SHOWN

PART No.	STOCK	MATERIAL	SPEC.
	.061 x 8 5/8 x 8 3/4	ALCLAD	4748-T

PARTS LIST PER ASSY.

LH REQ.	RH REQ.	LH REQ.	RH REQ.	LH REQ.	RH REQ.	LH REQ.	RH REQ.	LH REQ.	RH REQ.
-0		-2		-3		-4		-5	

AC				Finish Line					
NAVY NONE	Z-P-GP		12-11-42	Hand					
HEAT TREAT	FINISH	DRAFT	DESIGN	STRUCT	WT	APPROV	ENG.		

NAME BRACKET-FURNS.-DOOR ACTUATOR-ANTI-ICING SYS.

OPP. HAND 28F7809-A

CONSOLIDATED AIRCRAFT CORP. SAN DIEGO, CALIF.

SIZE D

28F7809

SHEET R

APPROVED FOR TOOLING BY
R.B. Humphreys 12-28-42

DW	REVISIONS		
A	THIS DWG MADE FOR AS 1691A		
B	ADDED 1/8" DIA HOLES, ADDED DIM & NOTE, REMOVED 1 DIM & NOTE, "T" TEST --- DETERMINE, ADDED "150° CENT" IN TWO PLACES, WAS 375 WT CHG NOT		

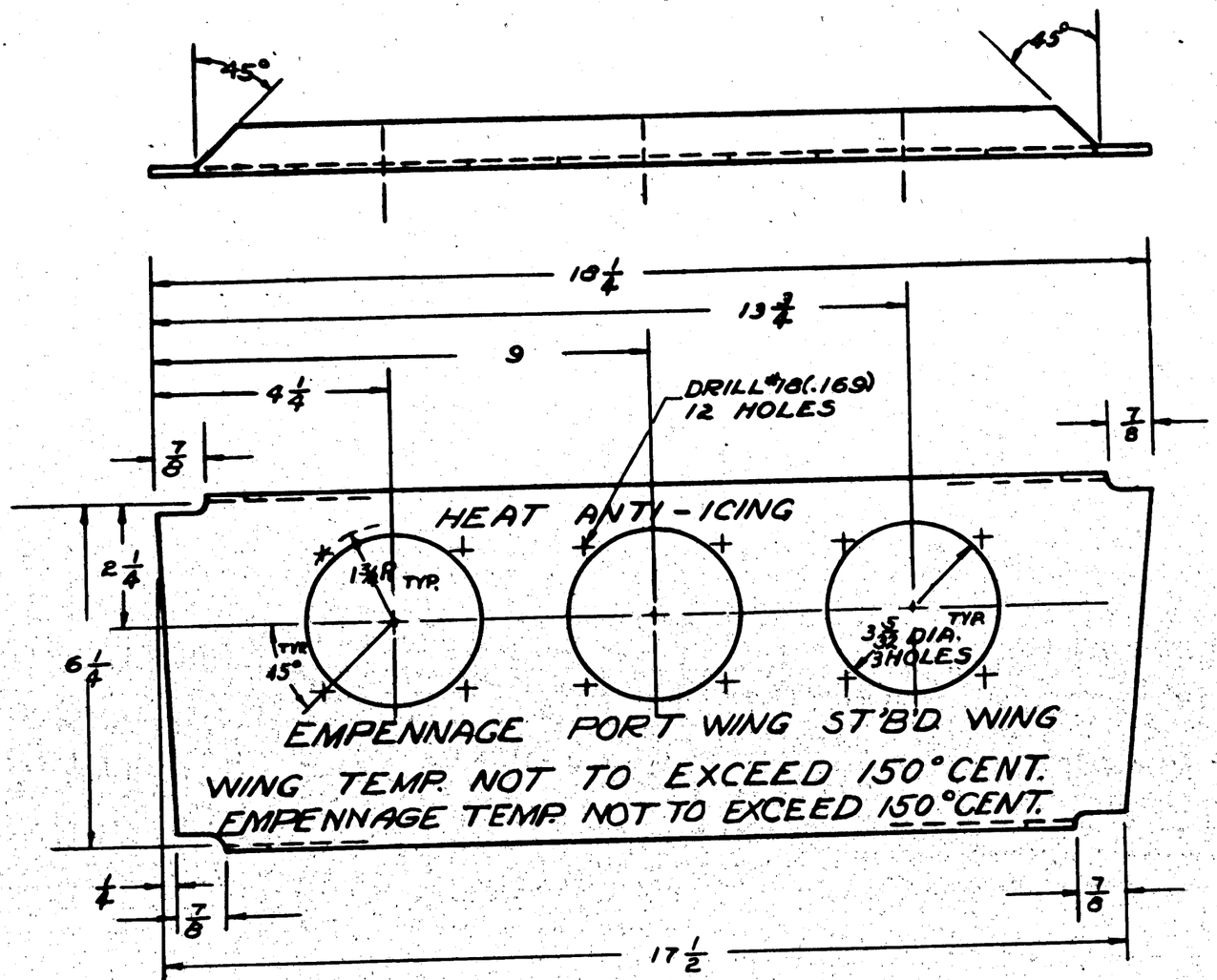

MCR #23-23 #346 & ON

NOTE:
STENCIL – RED LETTERS
3/8" HIGH

NOTE.
.STD BEND & RELIEF RAD.

APPROVED FOR
TOOLING BY
V Brown 2-3-43

ASSY. GAGE NO.	MODEL	NEXT ASSY.	DWG.
	PBY-5	28F134	1

REQUIREMENTS PER AIRPLANE

REPLACES	Gold. Wt.
E.O. #A93537A	96#
REPLACED BY	Adv. Wt.

SCALE 6" = 1'-0"
± 1/32
STAMP PART NUMBER

PART No.	STOCK	MATERIAL	SPEC.	LH REQ.	RH REQ.	LH REQ.	RH REQ.	LH REQ.	RH REQ.	LH REQ.	RH REQ.
		.040 X 8 X 18 Th	2S ALC. QQA 561 T	-0	-2	-3	-4	-5			

PARTS LIST PER ASSY.

AC								
NAVY NONE	ZP-GP	DRAFT	CHECK	STRUCT	MAT	APPROV		
HEAT TREAT	FINISH							

NAME PLATE-FURNS-ANTI-ICING TEMP. INDICATORS

OPP. HAND

CONSOLIDATED AIRCRAFT CORP. SAN DIEGO, CALIF.

DWG. SIZE D

28F7824

R

LET	ALTERATION	DATE	BY
A	IN REQ/MR. BLOCK, ADDED REQ. FOR PBY-5 & 5A NEXT ASSY. 28F7597 FOR MCR 178M-9 & ON & MCR # 23P-9 & ON. & LIMITER REQ. FOR PBY-5 & 5A NEXT ASSY 28F6784 FROM MCR 178-12 TO MCR 178-9 & MCR 23-17 TO MCR 23P-9 NO WT. CHG.	7-18-43	

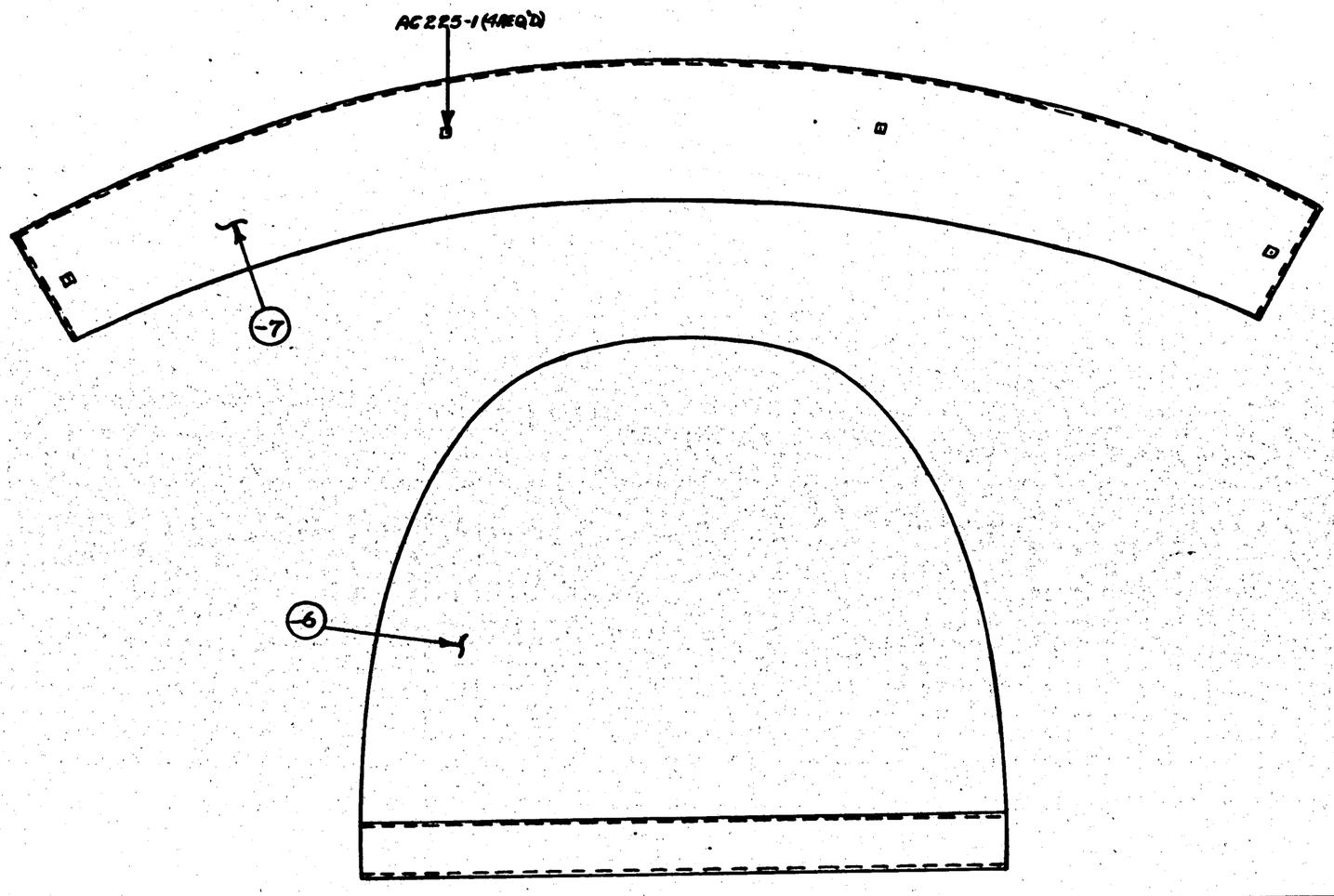

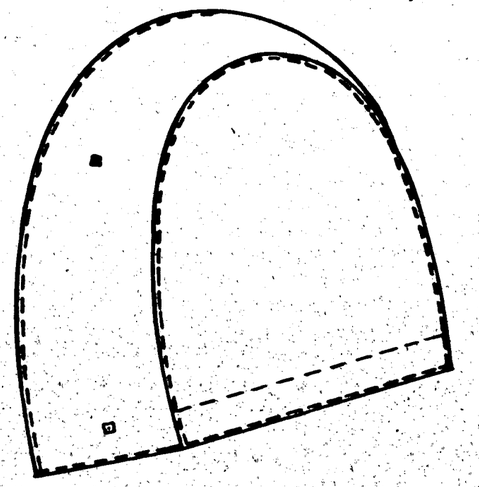

(A) MCR #178M-9 & ON — MCR #23P-9 & ON
MCR 178-12 TO MCR #178-9 — MCR #23-17 TO MCR #23P-9

ASSY. DASH NO.	MODEL	NEXT ASSY.	REQ.
	PBY-5A	28F7597	1
	PBY-5	28F7597	1
	PBY-5A	28F6784	1
	PBY-5	28F6784	1

REQUIREMENTS PER AIRPLANE

REPLACES

REPLACED BY

CALC. WT. / ACT. WT.

SCALE

STAMP PART NUMBER WHERE SHOWN

PART NO.	STOCK	MATERIAL	SPEC.	LH REQ. -0	RH REQ. -2	LH REQ. -3	RH REQ. -4	LH REQ. -5	RH REQ.
AC225-1				4					
-7	5½ X 18½	FAB-6		2					
-6	7½ X 8½	FAB-6		1					

PARTS LIST PER ASSY.

NOTE:
MATERIAL FOR -6 & -7 TO BE 20 OZ. CANVAS TREATED IN ACCORDANCE WITH NAVY SPEC. 2404 OR EQUIVALENT. MAY BE PURCHASED FROM
PANTASOTE CO., INC.
NEW YORK, N.Y.

APPROVED FOR TOOLING BY V. Brown 2-27-43

AC		STEWART					
NAVY NONE	NONE	2-11-43		1)		3-1-43	
HEAT TREAT	FINISH	DRAFT	CHECK	STRUCT	MAT	APPROV	

OPP. HAND

NAME COVER-FURN'S - EMPENNAGE - STEP.

CONSOLIDATED AIRCRAFT CORP. SAN DIEGO, CALIF.

DWG. D SIZE 28F7827

R 3/48

LET	ALTERATION	DATE	BY
A	REVISED TAB FACE OF BWD END RIB ASS'Y 28F81-KB-105(R) AND REPLACED WITH -18(A):-15(2):-MS CAC #SN 15-25(2) & AN 100-3(6). TO FACE OF BWD ADDED "TYPICAL VIEW OF CABLE ASSEM." & TO ASSEMBLY VIEW ADDED "TYP. 3/4 HOLES(3) IN -12 & 1/4 CUTOUTS (3) IN -6 & -7." ALSO ADDED TAB BLOCK TO FACE OF RIB. WT. CHGE = -.68	2-8-43	KEUK
B	CHANGED STOCK SIZE OF -6; -7 & -11 IN B/M FROM 32x33 TO 32x48 WT. CHGE = NOT	2-18-43	KEUK

MCR 23K
MCR 178H

MCR 23K
MCR 178H

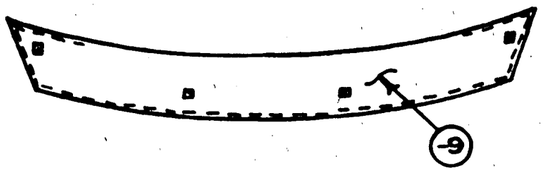

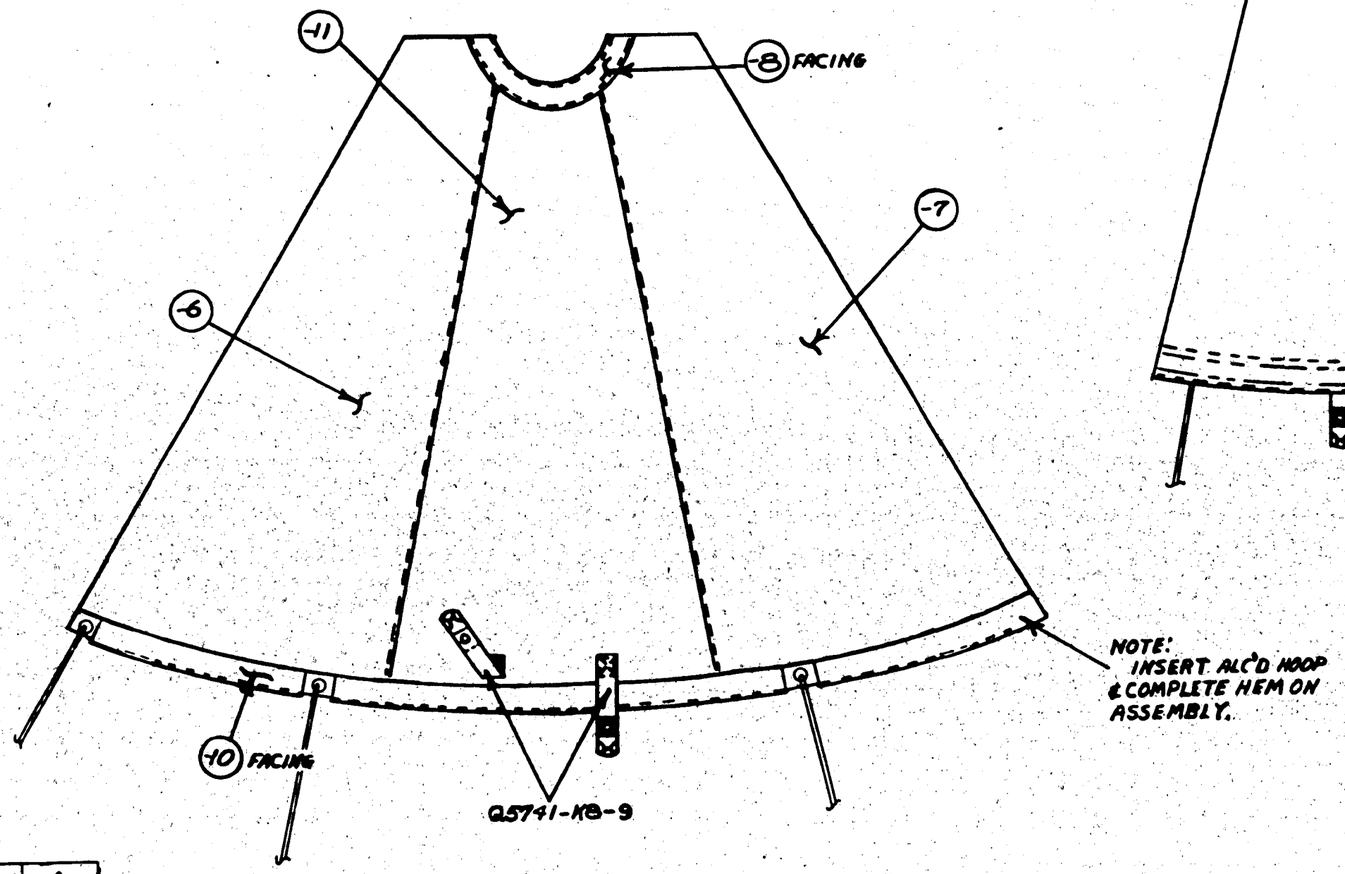

NOTE:
INSERT ALC'D HOOP & COMPLETE HEM ON ASSEMBLY.

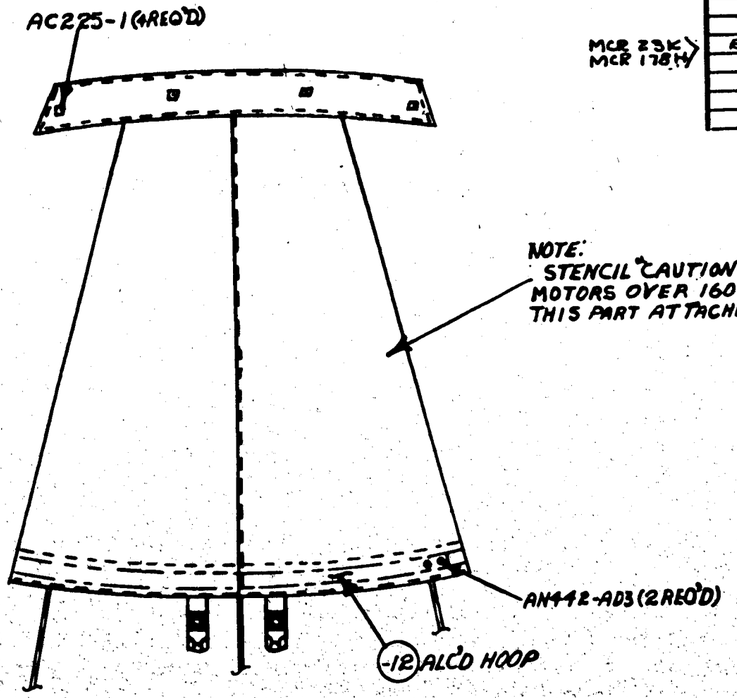

NOTE:
STENCIL "CAUTION - DO NOT RUN MOTORS OVER 1600 R.P.M. WITH THIS PART ATTACHED"

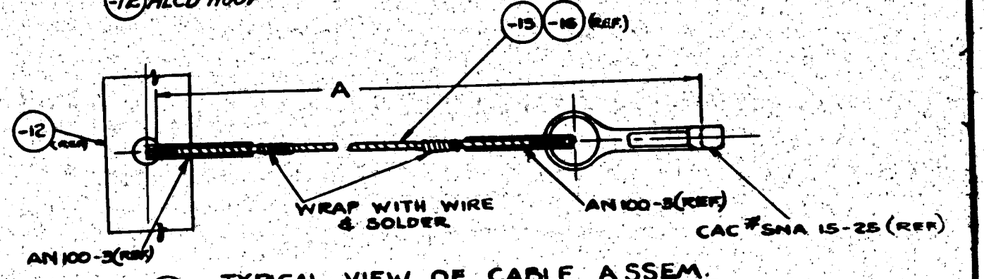

(A) TYPICAL VIEW OF CABLE ASSEM.

DASH NO.	A
-15	37
-16	25

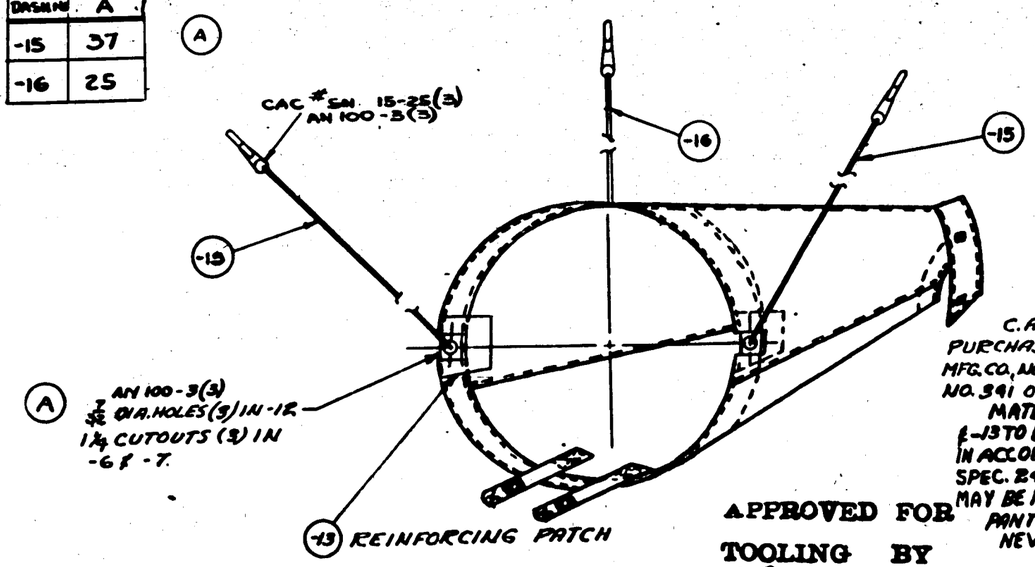

MCR 178-12
MCR 23-17

C.A.C. #SN 15-25 MAY BE PURCHASED FROM NORTH & JUDD MFG. CO., NEW BRITAIN, CONN. VENDOR'S NO. 341 OR EQUIV.
MATERIAL FOR -4, -7, -8, -9, -10, -11, & -13 TO BE 20OZ. CANVAS TREATED IN ACCORDANCE WITH ANAV SPEC. 2404 OR EQUIVALENT. MAY BE PURCHASED FROM PANTASOTE CO., INC. NEW YORK, N.Y.

APPROVED FOR TOOLING BY
V. Brown 2-27-43

PART No.	STOCK	MATERIAL	SPEC.	LH REQ. -0	RH REQ. -2	LH REQ. -3	RH REQ. -4	LH REQ. -6	RH REQ. -8
CAC SN #15-25 SNAP, NORTH & JUDD MFG. CO.				3	6				
AN 100-3									
AN 442-AD3								4	2
AGRRS-1								2	
Q5741-KB-9									
-16	7x7 = 1/16 DIA x 40	ST. STL. CABLE	AN-QR-C-98	1					
-18	7x7 = 1/16 DIA x 40	ST. STL. CABLE	AN-QR-C-98	2					
-12	4x5	FAB & COMM.		3					
-12	3/4 x .064 x 96	ALCLAD	24ST-T4	1					
-11	32 x 48	FAB. & COMM.		1					
-10	27 1/2 x 33			1					
-9	5 1/2 x 19 1/2			2					
-8	5 1/2 x 11 1/2			1					
-7	32 x 48			1					
-6	32 x 98	FAB. & COMM.		1					

PARTS LIST FOR ASSY.

ASSY. DASH No.	MODEL	NEXT ASSY.	REQ.
FBV-6A	28F6784		1
FBV-5	28F6784		1

REQUIREMENTS PER AIRPLANE

REPLACES — GRAD. WT.
REPLACED BY — ASY. WT.

SCALE NO SCALE

STAMP PART NUMBER WHERE SHOWN

AC
NAVY NONE — HEAT TREAT
NONE — FINISH

DRAFT 2-11-43 | CHECK | STRUCT | MAT. | APPROV.

NAME SCOOP-FURN'S-EMPENNAGE DE-ICER

CONSOLIDATED AIRCRAFT CORP. W-6 SAN DIEGO, CALIF.

OPP. HAND

DWG. SIZE D — 28F7828

R 28F7828

LET	ALTERATION	DATE	BY
A	REVISED & REDRAWN:- ADDED A-2-43		
	28F6690-7		

MCR 209

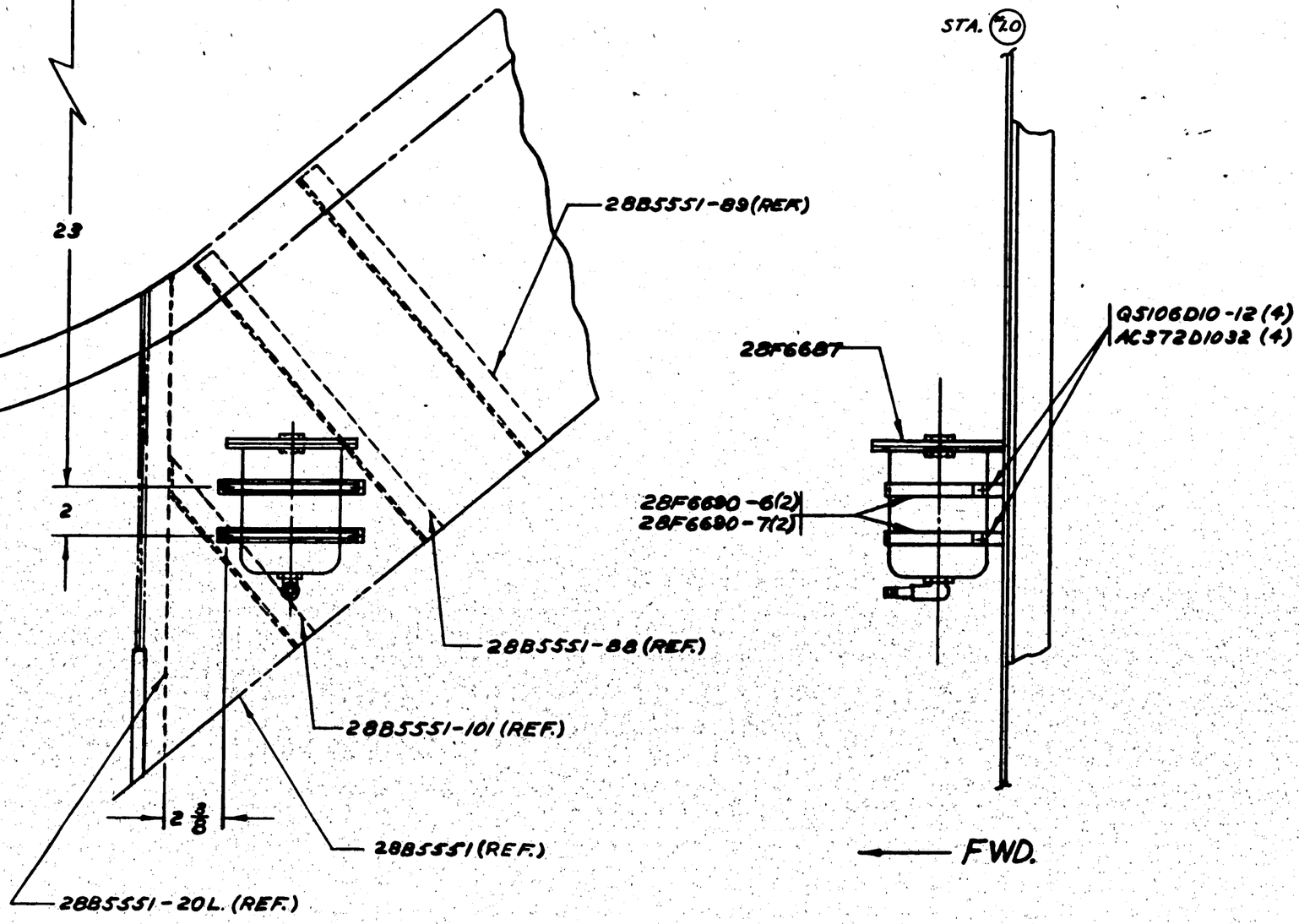

VIEW LOOKING AFT

C.# NO. 10464

APPROVED FOR TOOLING BY Gerstline 8-12-43 MCR 209-2

ASSY. DASH NO.	MODEL	NEXT ASSY.	REQ.
	PBY-5A	28F6716	1

REQUIREMENTS PER AIRPLANE

REPLACES — CALC. WT. 1.03

REPLACED BY — ACT. WT.

SCALE 3"=1'0" ± 1/32

STAMP PART NUMBER WHERE SHOWN

PART No.	STOCK	MATERIAL	SPEC.	LH REQ. -0	RH REQ. -2	LH REQ. -3	RH REQ. -4	LH REQ. -5	RH REQ.
AC372D1032					4				
QS106D10-12					4				
28F6690-7						2			
28F6690-6							2		
28F6687								1	

PARTS LIST PER ASSY.

A C — NAVY NONE — HEAT TREAT: NONE — FINISH

DRAFT: DALLACE 1-13-43 — CHECK: — STRUCT: — MAT: — APPROV: — ENGR: GERSTLINE 2-4-43

NAME INSTALL.-OVERFLOW RESERVOIR-HYDRAULIC SYS.

OPP. HAND NONE

CONSOLIDATED VULTEE AIRCRAFT CORP. SAN DIEGO DIVISION SAN DIEGO, CALIF.

DWG. D — 28F7831

168182

LET	ALTERATION	DATE	BY
A	CHG'D. 82° TO 17½°. 79° TO 77°. & 27/32 TO 25/32. NO WEIGH.	5-18-43	VANAKE

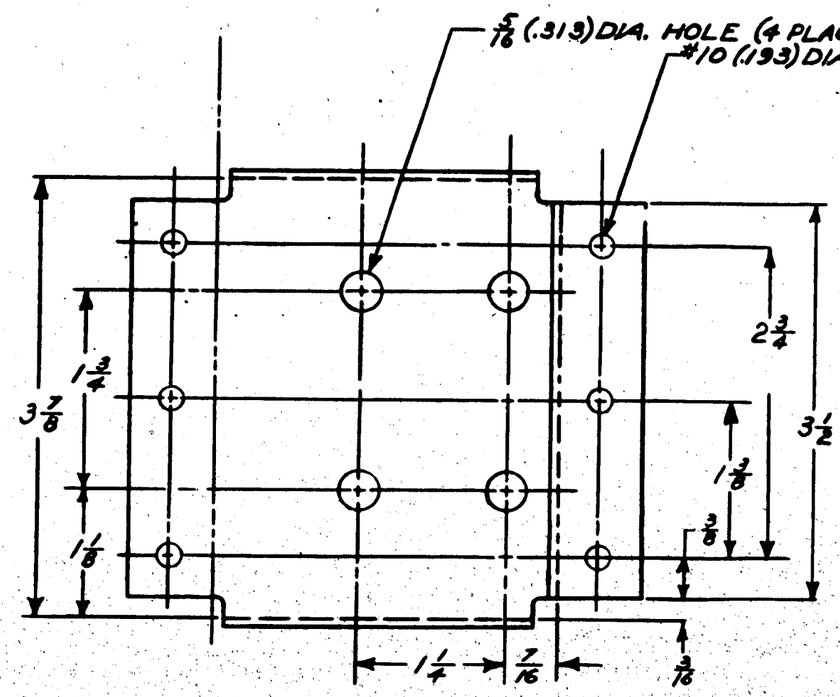

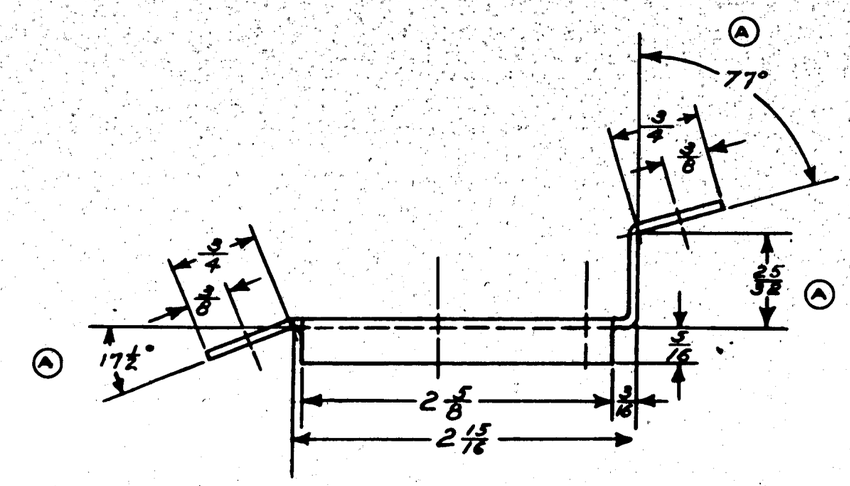

MCR 23-10-17
C. 91876
NXS 13595
MCR 178-3-1

USE 3/32 BEND & RELIEF RADII.

APPROVED FOR TOOLING BY V Brown 3-10-43

ASSY. SALES NO.	MODEL	NEXT ASSY.	REQ.
	A&F-5	28F7811	2
	A&F-5A	28F7811	2

REQUIREMENTS PER AIRPLANE

REPLACES 28F7809 .16# CALC. WT.

REPLACED BY ACT. WT.

SCALE 12" = 1'0"

STAMP PART NUMBER WHERE SHOWN

PART NO.	STOCK	MATERIAL	SPEC.	LH REQ. -0	RH REQ. -0	LH REQ. -2	RH REQ. -2	LH REQ. -3	RH REQ. -3	LH REQ. -4	RH REQ. -4	LH REQ. -5	RH REQ. -5
-0	012X4¾X5½	ALCLAD	QQ-A-362-II										

PARTS LIST PER ASSY.

AC		BUNOS						
NAVY NONE	Z-P-GP	3-9-43				3-10-43		
HEAT TREAT	FINISH	DRAFT	CHECK	STRUCT	MAT	APPROV	ENG.	

NAME BRACKET-FURNS-ACTUATOR ANTI-ICING SYSTEM

OPP. HAND NONE

CONSOLIDATED AIRCRAFT CORP. San Diego, Calif.

SIZE D

28F7836

R

LET	ALTERATION	DATE	BY

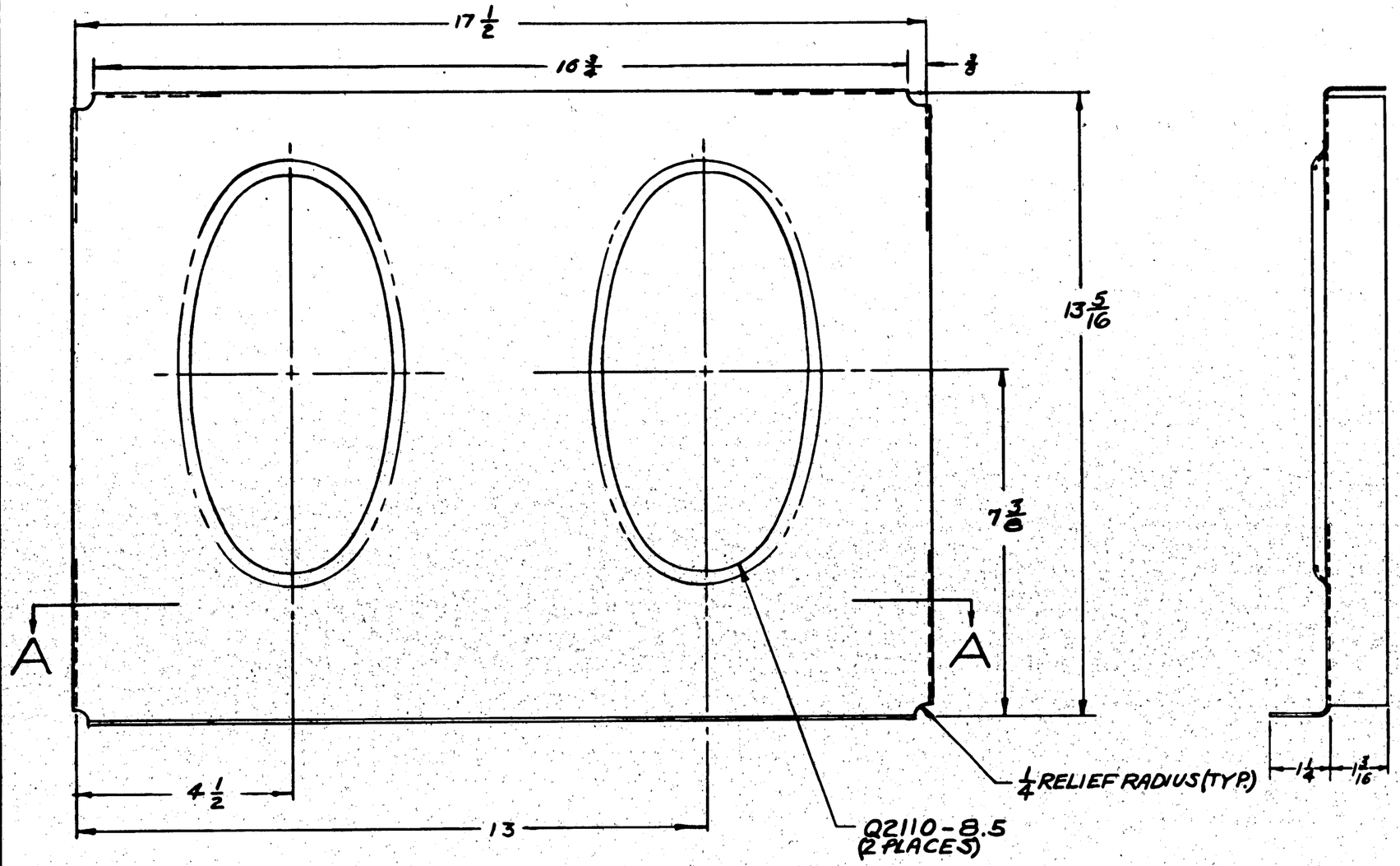

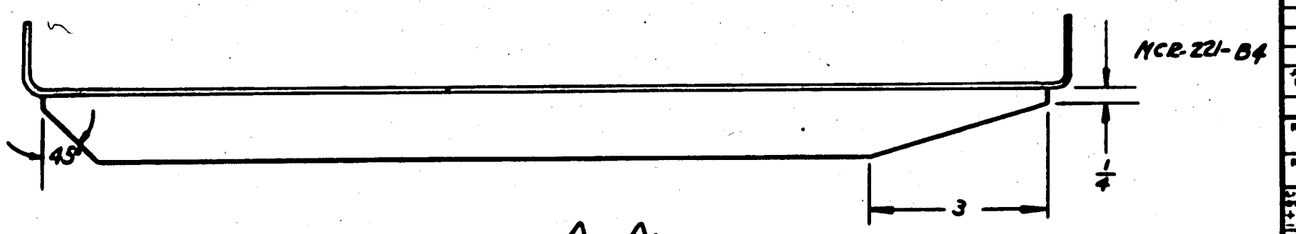

SECTION A-A

APPROVED FOR TOOLING BY
Gorsline 8-10-43

ASSY. DASH NO.	MODEL	NEXT ASSY.	REQ.
	PBY-5A	28F7859	1

REQUIREMENTS PER AIRPLANE

REPLACES — CALC WT. 159

REPLACED BY — ACT. WT.

LIGHT ON DRAWINGS UNLESS OTHERWISE SPECIFIED ± 1/32

SCALE 6"=1'-0"

STAMP PART NUMBER WHERE SHOWN

PART NO.	STOCK	MATERIAL	SPEC	LH REQ. -0	RH REQ. -2	LH REQ. -3	RH REQ. -4	LH REQ. -5	RH
	.061x16¼x20⅜	ALCLAD	QQA-362T						

PARTS LIST PER ASSY.

AC
NAVY NONE
HEAT TREAT

ZP-GP
FINISH

DRAFT	CHECK	STRUCT.	MAT	APPROV.	ENG.
6/8/43 M. ADLER 8-1943					

NAME SUPPORT - OXYGEN BOTTLES SIDE

OPP. HAND NONE

CONSOLIDATED VULTEE AIRCRAFT CORP. SAN DIEGO DIVISION . . SAN DIEGO, CALIF.

DWG. SIZE D

28F7863

R 28F7863

LET	ALTERATION	DATE	BY

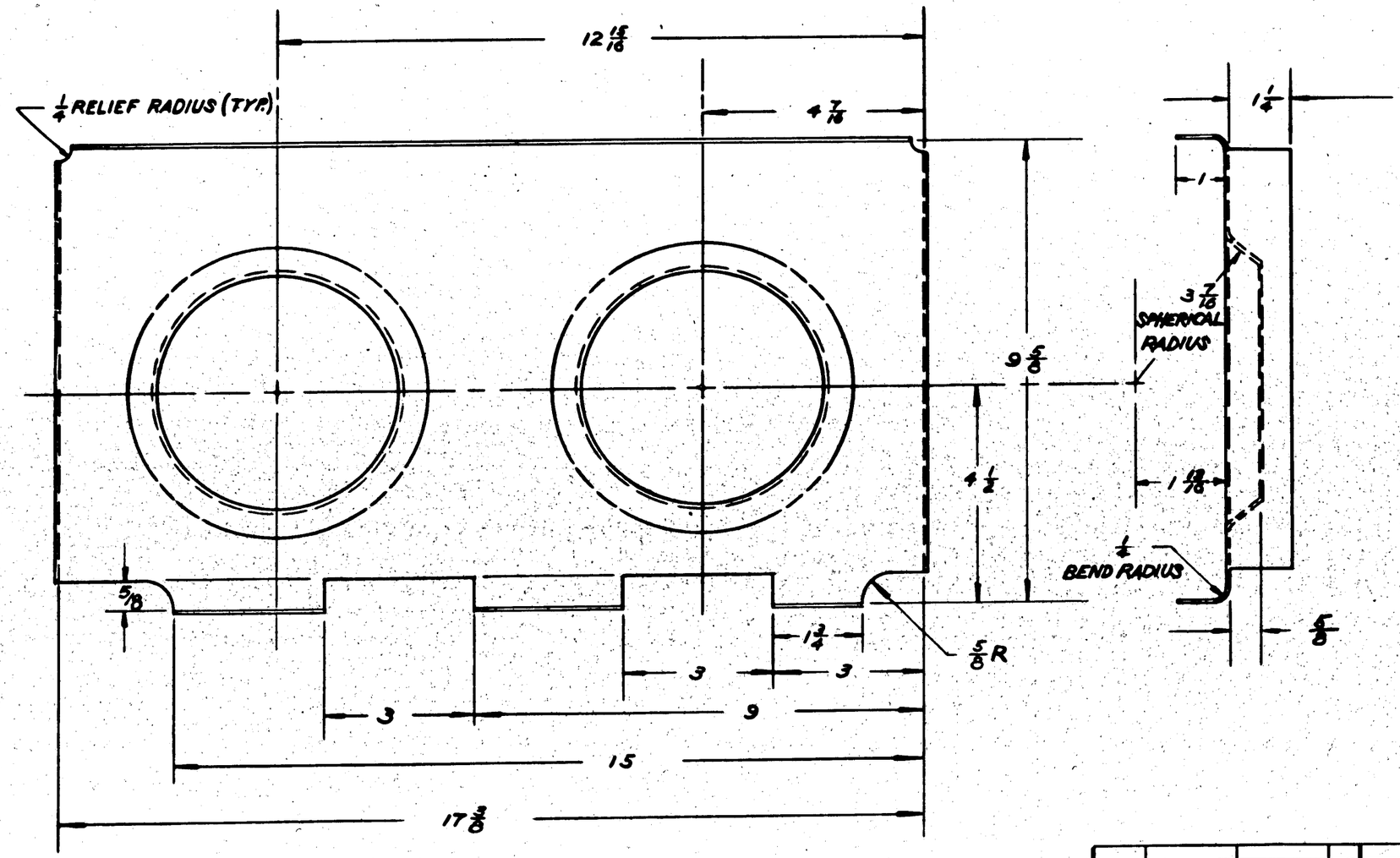

MCR2218-4

ASSY. DASH No.	MODEL	NEXT ASSY.	QTY.
	P8Y-5A	28F7859	1

REQUIREMENTS PER AIRPLANE

REPLACED	CALC. WT. 1.12
REPLACED BY	ACT. WT.
UNLESS OTHERWISE SPECIFIED DIMENSIONS ARE IN INCHES TOLERANCES ± 1/32	SCALE 6"=1'0"

STAMP PART NUMBER WHERE SHOWN

PART No.	STOCK	MATERIAL	SPEC.	LH REQ.	RH REQ.	LH REQ.	RH REQ.	LH REQ.	RH REQ.	LH REQ.	RH REQ.	LH REQ.	RH REQ.
	.064X11 7/8X20	ALCLAD	QQA562-T										
PARTS LIST PER ASSY.				-0		-2		-3		-4		-5	

AC NAVY NONE		SUBMITTED						
HEAT TREAT	Z-P-6P FINISH	8-7-43 DRAFT	8-19-43 CHECK	STRUCT	MAT	APPROV	ENG.

NAME SUPPORT-OXYGEN BOTTLES-LOWER FORWARD

OPP. HAND NONE

CONSOLIDATED VULTEE AIRCRAFT CORP. SAN DIEGO DIVISION . . SAN DIEGO, CALIF.

DWG. D 01128 28F7865

APPROVED FOR TOOLING BY Gorsline 8-10-43

28F7865 R

LET	ALTERATIONS	BY	DA
A	[illegible]	[illegible]	[illegible]

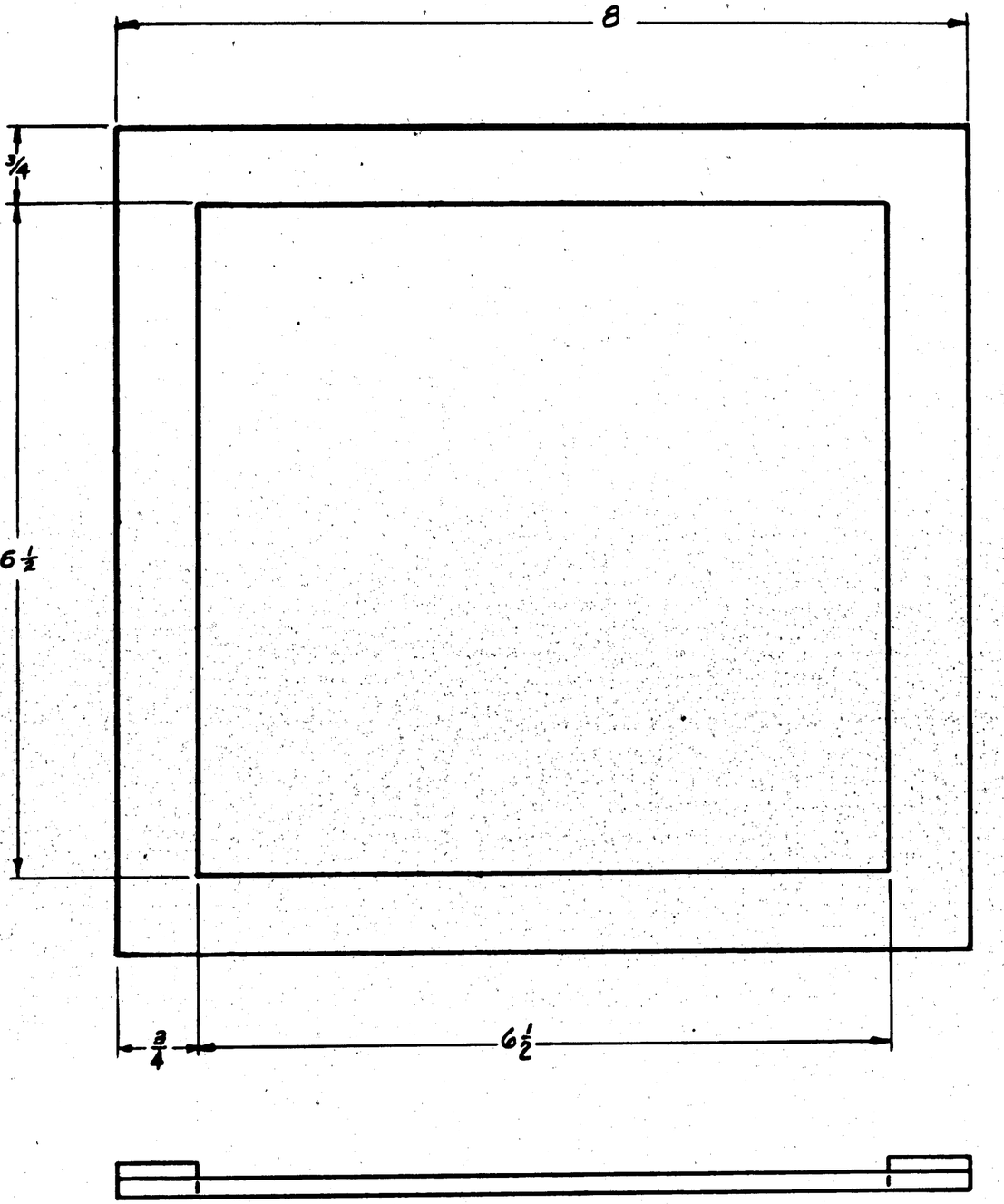

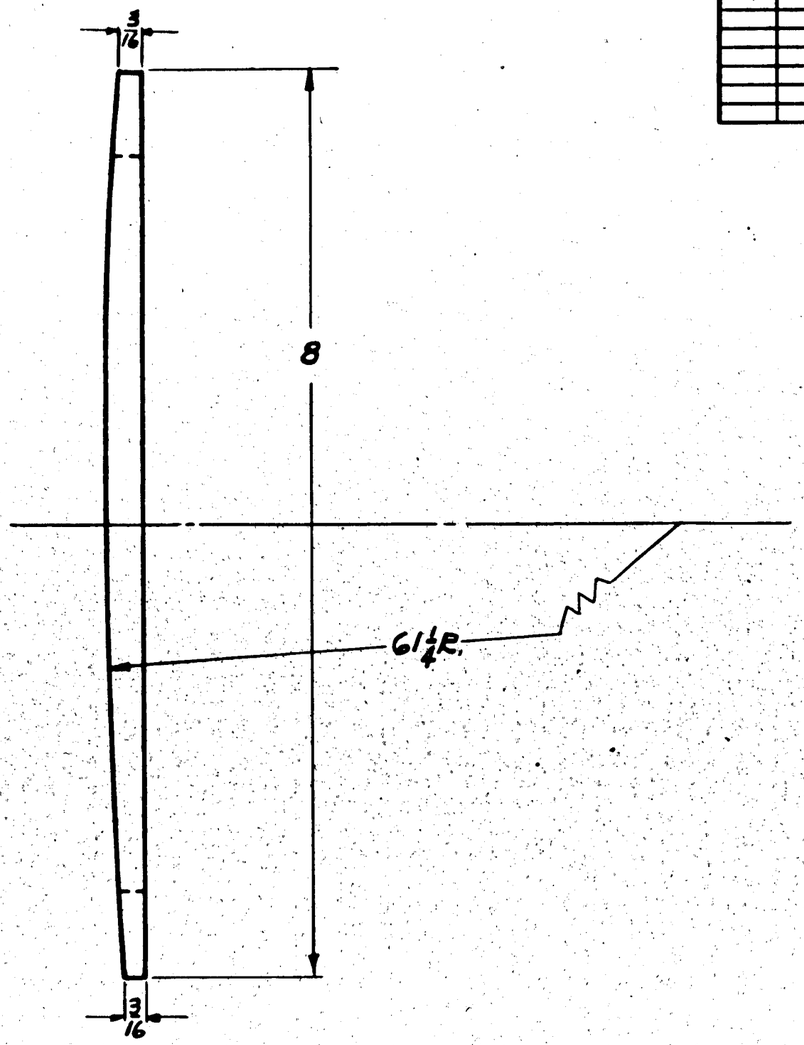

MCR-2218-1-2

APPROVED FOR TOOLING BY Gorsline 7-17-43

ASSY. DASH No.	MODEL	NEXT ASSY.	REQ.
	PBY-5A	28F7852	1

REQUIREMENTS PER AIRPLANE

REPLACES	.24 CALC. WT.	
REPLACED BY	ACT. WT.	
UNLESS OTHERWISE SPECIFIED ± 1/16	SCALE 12" = 1'-0"	

STAMP PART NUMBER WHERE SHOWN

SYNTHETIC RUBBER

PART No.	STOCK	MATERIAL	SPEC

PARTS LIST PER ASSY.

AC	
NAVY NONE	NONE
HEAT TREAT	FINISH

NAME GASKET - AIRSCOOP CENTRAL HEATING SYSTEM

CONSOLIDATED VULTEE AIRCRAFT CORP.

DWG. NO. 28F7883

R 28F7852

LET	ALTERATION	DATE	BY
A	PARTS LIST ADDED, CHG'D -7 FROM 29F3003	6-6-41	[illegible]
B	ADDED NOTE "SISAL ... ROPE, NO WT CHG"	7-14-42	RLR
C	IN MAT. MAT. NOTE: "ROPE" CHG'D TO "MANILA ROPE"		
	"SPEC. E-T-R-601a, CLASS D" WAS "SPEC. COMM."		
	SPEC. "-8, -9 MAT.: "SPEC. T-R-601"		
	WAS "TARRED" (NEG. WT. CHG.)	9-8-42	[illegible]
D	ON FACE CHG. NOTE: SISAL		
	ROPE 5/8 DIA. TO SISAL ROPE		
	1/2 DIA. NEG. WT. CHG.	9-22-42	MOE
E	IN REQS. WR FOR PBY-5A LIMITED N/A		
	28F6053 TO C/N 77713 & 88476 ONLY		
	ADDED REQS. FOR N/A 28F7562 FOR		
	PBY-5A C/NOS (as) 464 NOR 178-L NO WT. CHG	6-12-43	[illegible]

E.O. A46263

E.O. A58693

NCR 178-L

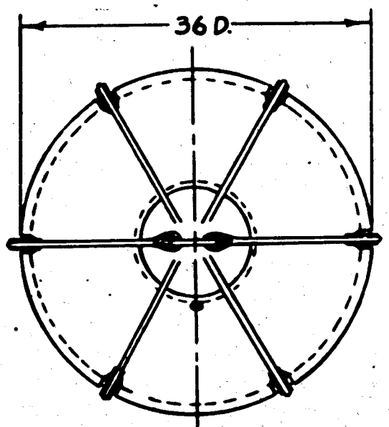

PLAN VIEW

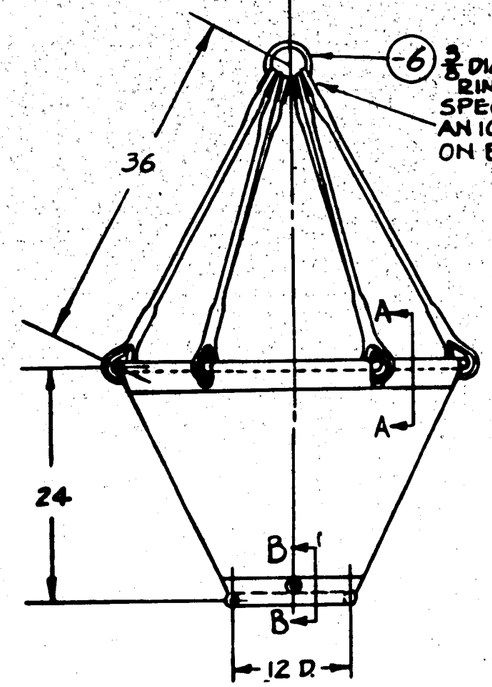

FRONT VIEW

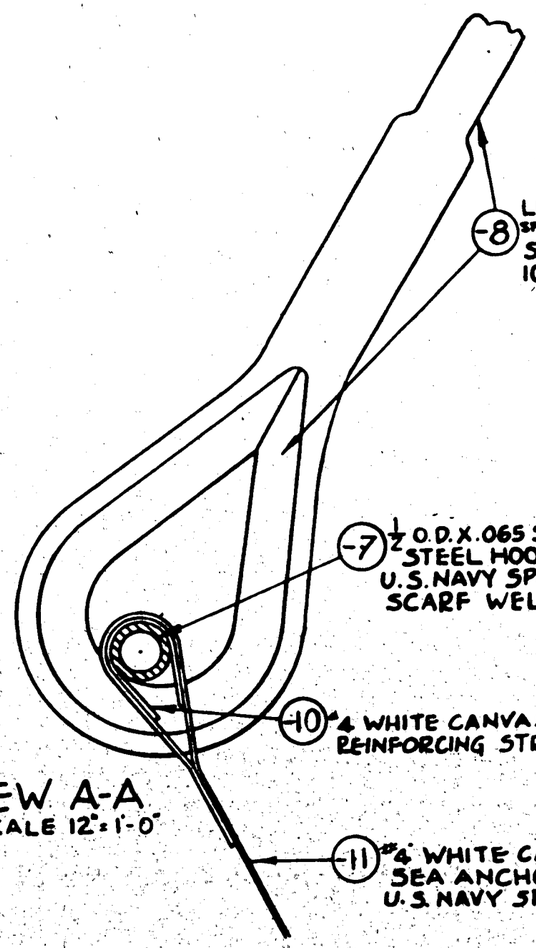

VIEW A-A
SCALE 12" = 1'-0"

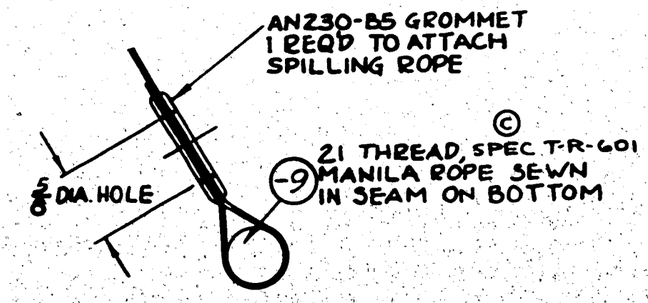

VIEW B-B
SCALE 12" = 1'-0"

-6 3/8 DIA. STAINLESS STEEL RING, 4 I.D. U.S. NAVY SPEC. 46S-18 GRADE 1 AN 100-C16 THIMBLE ON EACH LEADER

© (B) (D)

NOTE: - SISAL ROPE, 1/2 DIA., SPEC. E-T-R-601a, CLASS D MAY BE USED AS ALTERNATE FOR MANILA ROPE.

C/NOS (as) 464 NOR 178-L
C/NOS 77713 & 88476 ONLY

THIS ANCHOR IS IDENTICAL TO BUREAU OF AERONAUTICS SEA ANCHOR #872SK

NOTE: METHODS OF CONSTRUCTION IS TO BE SIMILAR TO THAT SHOWN ON AN 8006.

LEADER AND BOTTOM STIFFENING ROPES TO BE 21 THREAD, TARRED MANILA ROPE. SPEC. TR-601a (1/2 DIA.)

ALL METAL PARTS TO BE STAINLESS STEEL.

ALL SPLICES TO BE SERVED WITH LINEN THREAD SPEC. V-T-291-TYPE-B-9 PLY.

PURCHASE TO DWG.

ASSY. DASH NO.	MODEL	NEXT ASSY	REQ'D
	PBY-5A	28F1562	1
	PBY-5A	28F6053	1
	PBSY-3	29F3446-2	1
	XPB2Y-3	29F3002	1

REQUIREMENTS PER AIRPLANE

REPLACES — CALC WT.

REPLACED BY — ACT WT.

SCALE 1" = 1'-0" & NOTED

STAMP PART NUMBER WHERE SHOWN

PART NO	STOCK	MATERIAL	SPEC	LH REQ -0	RH REQ -2	LH REQ -3	RH REQ -4	LH REQ -5	RH
AN230-B5	GROMMET							1	
AN100-C16	THIMBLE							12	
-11		NOTED	NOTED					1	
-10		↓	↓					1	
-9								6	
-8								1	
-7								1	
-6		NOTED	NOTED					1	

PARTS LIST PER ASSY.

AC / NAVY — HEAT TREAT — FINISH

	DRAFT	CHECK	STRUCT.	MAT	APPROV	ENG
2-6-41	PECEN			R.W.S.		

OPP HAND

NAME ASSY-FURN'S-SEA-ANCHOR

CONSOLIDATED AIRCRAFT CORP. SAN DIEGO, CALIF.

DWG D — 29F3035

SIZE R — 29F3035

LET	ALTERATION	DATE	BY
A	ADDED 28E3101-7 AND AN526DD633-6, AC365D632 TO BACK OF DWG. & R/M		
B	LORD SHOCK MOUNT #SK659-2M WAS SK659-1M	7/15/46	Ford
C	ADDED F.S.S.C. #88-H-500 & #88-C-150	8/5/46	Ford
D	ADDED LOCATING DRM. AT AIRSPEED CORRECTION CARD HOLDER; ADDED RIVETS AN430-2-3 TO MOUNT SAME NEG WT & NO	9/26/46	ANDERSON
E	REPLACED #30 (.128) WITH #28 (.1405) IN DRILL NOTE. ALSO		
	ADDED "AN 960-A6 (12)"	9/26/46	ANDERSON
F	CHGD 1/32 TO 1/64 & NOTED IN TOLERANCE BLOCK. AND ADDED NOTE: "TOLERANCE TO AGREE W/ WT CHG"		

GOODYEAR EQ. 2456

GOODYEAR E.O. 4389

Ⓒ * F.S.S.C. #88-H-500 HOLDER
* F.S.S.C. #88-C-150 CARD

DRILL #18 (.169) 15 PLACES

$2\frac{5}{32}$ D.

$2\frac{5}{8}$ D. B.C.

$1\frac{19}{16}$ $1\frac{7}{8}$ $3\frac{15}{16}$ $1\frac{7}{8}$

AIRSPEED CORRECTION

$\frac{3}{8}$ $\frac{1}{2}$ $\frac{7}{8}$

AN430-2-3 RIVETS 2 PLACES Ⓓ

45°

$\frac{13}{16}$ $\frac{15}{16}$R $\frac{15}{64}$R. $\frac{15}{64}$R $\frac{51}{64}$

$1\frac{41}{32}$ $\frac{3}{16}$R.

$3\frac{5}{32}$ D. 3 PLACES

$1\frac{7}{16}$ $1\frac{7}{16}$

8 $3\frac{3}{4}$ $2\frac{1}{4}$

-6

$1\frac{31}{32}$R. $\frac{5}{16}$R. $1\frac{3}{32}$ $\frac{1}{8}$R. $\frac{11}{16}$R

$3\frac{1}{2}$ D. B.C. 3 PLACES

$7\frac{7}{8}$

$4\frac{5}{8}$ $2\frac{5}{16}$

AN442-AD4 RIVETS 6 PLACES

$1\frac{7}{16}$

C.91876 -7 PBY-6 28F6322 3
PB2Y-3R 29-3133 1
C.70496 (118-167) -7 PBY-5 28F5322 3
-9 PB2Y3 29F3133 1
-9 XPB2Y-3 29F3133 1

ALT'N DASH NO.	MODEL	NEXT ASSY.	REQ'D

REQUIREMENTS PER AIRPLANE

REPLACES — .326 CALC. WT.

REPLACED BY — ACT. WT.

SCALE 12" = 1'-0"

STAMP PART NUMBER WHERE SHOWN

$2\frac{1}{16}$

$\frac{3}{4}$ $\frac{1}{2}$ 1

$1\frac{1}{2}$ $\frac{1}{2}$ 1 $\frac{3}{4}$

DRILL $\frac{1}{32}$ DIA. 1 HOLE

DRILL #28 (.1405) 4 HOLES.

Ⓔ

-7

Ⓕ NOTE:
TOLERANCE TO BE 1/64 FOR LOCATION OF STOCK MOUNT BRACKET & MOUNTINGS

LOAD SIDE

FINISH CODE	
Z	ANODIC TREATMENT
P	P-27 PRIMER
AP	ALUMINIZED PRIMER
C	CADMIUM PLATE

DBL- DULL BLACK LACQUER

Ⓐ 28F3101-7 SHOCK MOUNT SHIMS BETWEEN EACH SHOCK MT. & BRACKET (3 REQ.)
Ⓔ AN526DD632-6 SCREWS (12) } FOR MOUNTING
AC365D632 NUTS (12) & } SHOCK MOUNTS
AN960-A6 (12) - WASHERS
REF SHIMS ARE .010

LORD MFG. CO #SK659-2M Ⓑ SHOCK MOUNTS 3 PLACES

LOAD SIDE

ALL BEND RADII TO BE 1/8 UNLESS OTHERWISE NOTED

$\frac{3}{4}$

#INDICATES GOV'T FURNS MATERIAL

				* F.S.S.C #88-H-500 HOLDER			1						
				" 88-C-150 CARD			1						
				LORD MFG. CO SHOCK MT. #SK659-2M			3						
				AN442AD4									
				AN526DD632-6			12						
				AC365D632			12						
-7	PBY-6	28F6322	3										
	PB2Y-3R	29-3133	1										
-7	PBY-5	28F5322	3										
-9	PB2Y3	29F3133	1										
-9	XPB2Y-3	29F3133	1										
				28F3101-7			3						
				AN430-2-3									
				AN960-A6			12						
-7	.072 x 2 1/8 x 2			ALC 2457	47A8 COND T		1						
-6	.051 x 19 x 19			ALCOA 2S	47A10 COND A		1						
PART No.	STOCK			MATERIAL	SPEC.			LH REQ.	RH REQ.	LH REQ.	RH REQ.	LH REQ.	RH REQ.	LH REQ.	RH REQ.
PARTS LIST PER ASSY.								-0		-2		-3		-4		-5	

AC			APP'D		
NAVY SPEC'S CAMO T.	Z-P-2DBL	3-17-44	CHECK	J.C.H	9-9-44
HEAT TREAT	FINISH	DRAFT	STRUCT	MAT'L APPROV	ENGR.

NAME PANEL - FURNS. - NAVIGATORS INSTRU.
CONSOLIDATED AIRCRAFT CORP. SAN DIEGO, CALIF.

OPP. HAND NONE

DWG. D SIZE 29F3123

GOODYEAR

LTR	ALTERATION	DATE	BY
E.O. A23927			
A	ADD FOOTNOTE: "SOLDER SHIELDING		
	BRAID TO ----". NO WT. CHG.	4-21-42	[illegible]
E.O. A30487	B INSERTED CABLE LENGTH OF -6 (98")		
	IN B/M. ADDED -66-7 NOS. TO FAIL.		
	NO WT. CHG.	8-21-42	[illegible]

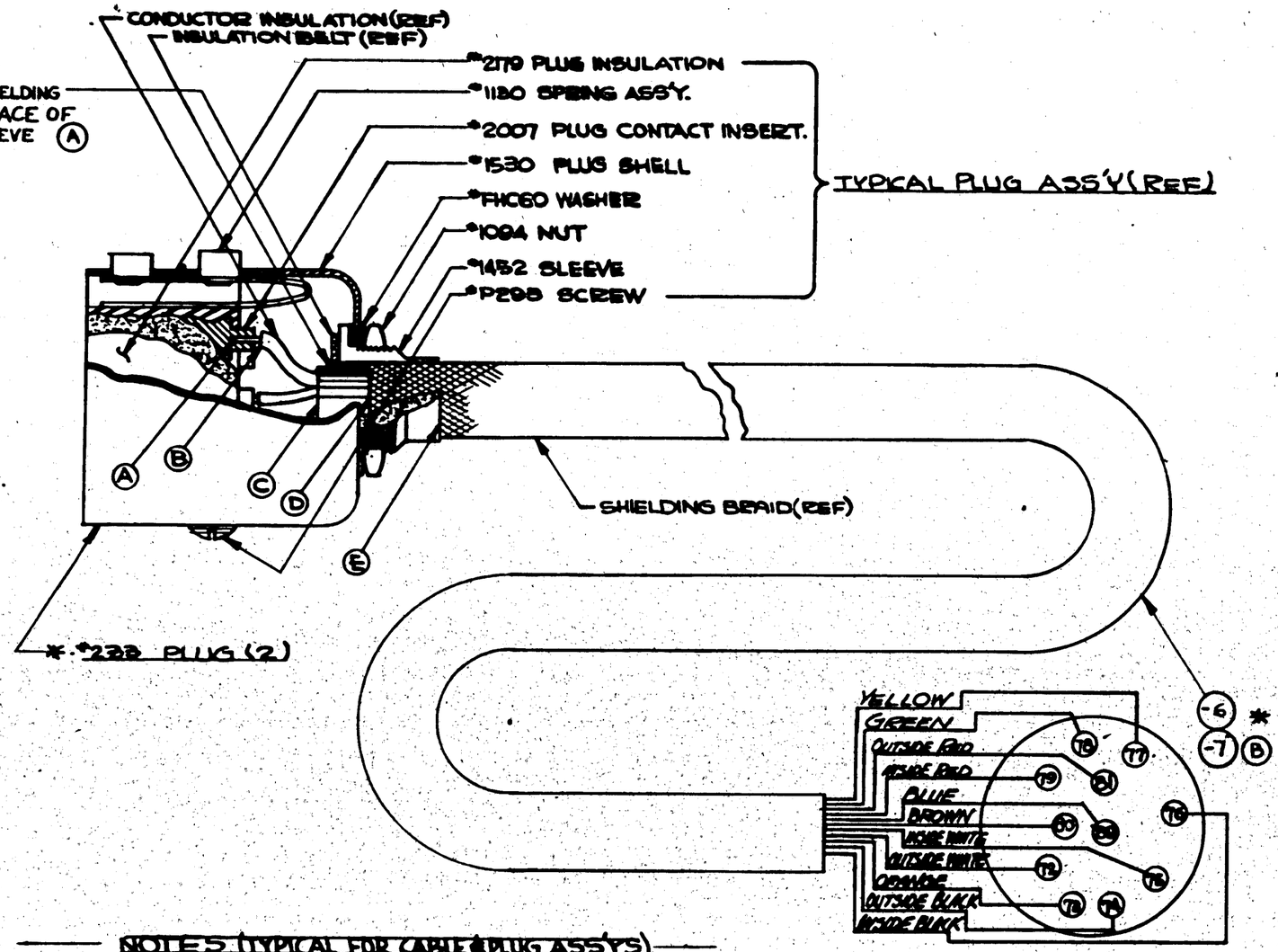

NOTES (TYPICAL FOR CABLE & PLUG ASS'YS)

1. CLEAN CONDUCTORS AS FOLLOWS:-
   A—B: 5/32
   A—C: 3/4
   A—D: 1 5/16
2. SLEEVE OVER BRAID
   D—E: 5/16

DASH NUMBER	CABLE LENGTH
-6	98
-7	15

NOTE

* - DENOTES GOVERNMENT FURNISHED

C-91876

DASH NO.	MODEL	NEXT ASSY.	QTY.
-0	PB2Y-3	29U3040	1
-2	PB2Y-3	29U3040	1
-3	PB2Y-3	29U3102	1

REQUIREMENTS PER AIRPLANE

REPLACES — Engr. Wt.

REPLACED BY — Adv. Wt.

LIST OF SUPERSEDED UNLESS OTHERWISE SPECIFIED — SCALE

STAMP PART NUMBER WHERE SHOWN

* *238 Plug Assy (Aircraft Half) (2)
-7 - 15" (6X18 7 Gage Cable Cond. #18)
-6 - 98" (6 Gage Cable Cond. #18)

PART No.	STOCK	MATERIAL	SPEC.	-0 REQ.	-2 REQ.	-3 REQ.	-4 REQ.	-5 REQ.
PARTS LIST PER ASSY.								

A.C. —
NAVY NONE
HEAT TREAT — NONE — FINISH

DRAFT — DESIGN — STRUCT — MAT — APPROV — ENG.

NAME CABLE ASSY-FUEL GAGE JUNCTION BOX TO GF RECVR. — OFF. HAND —

CONSOLIDATED AIRCRAFT CORP. San Diego, Calif.

SIZE D — 29F6399

LET	ALTERATION	DATE	
A	CALL'D OUT #E PLUG ON FACE & REPLACED #135 PLUG WITH #E PLUG IN B/M.	4-26-43	GENDERS
B	ADD'D CABLE-LENGTH 162 TO -6 REPLACED -X ON FACE WITH -6 & -7	4-26-43	GENDERS
C	CREATED -3 ASS'Y FOR PBYS C91876 #90 & ON WT. -3 ASS'Y 2.3#	10-21-43	ROGERS
D	TO FACE OF DRG. & B/M ADDED -9	12-43	GENDERS
	CREATED -4 ASSY. FOR PBYS C91876 #91 ON WT CHG. WA28F6955(1) CANCELLED -3 ASSY. FOR PBYS C91876 & PBYSA CNRS13595 ALL	9-3-43	
E	EXTENDED REQ OF -4 ASSY FOR PBYSA. NO WT. CHG.	4-9-43	KAPP
F	CHANGED LENGTH OF -8 FROM 103 TO 86. WT. CHG. -8 #-.3	4-22-43	KAPP
G	ON FACE OF DWG. ADDED TAPE & CORD WRAPPING: DIMS. 1/2, 2. & NOTE "TO APPLY -- CABLE" WT. CHG. NEG.	6-11-43	
H	IN B/M -9, 2717-E X 133 (1) WAS #-9, 2717-E X 1450, IN LGTH BLOCK -9 133 WAS -9, 1#6. WT. OF -4 ASSY PREPRESSED .23#	7-17-43	

E.O. A 23932

E.O. A 30718

E.O. A 62814

E.O. B 2002

E.O. A 89423

C.R. 31323

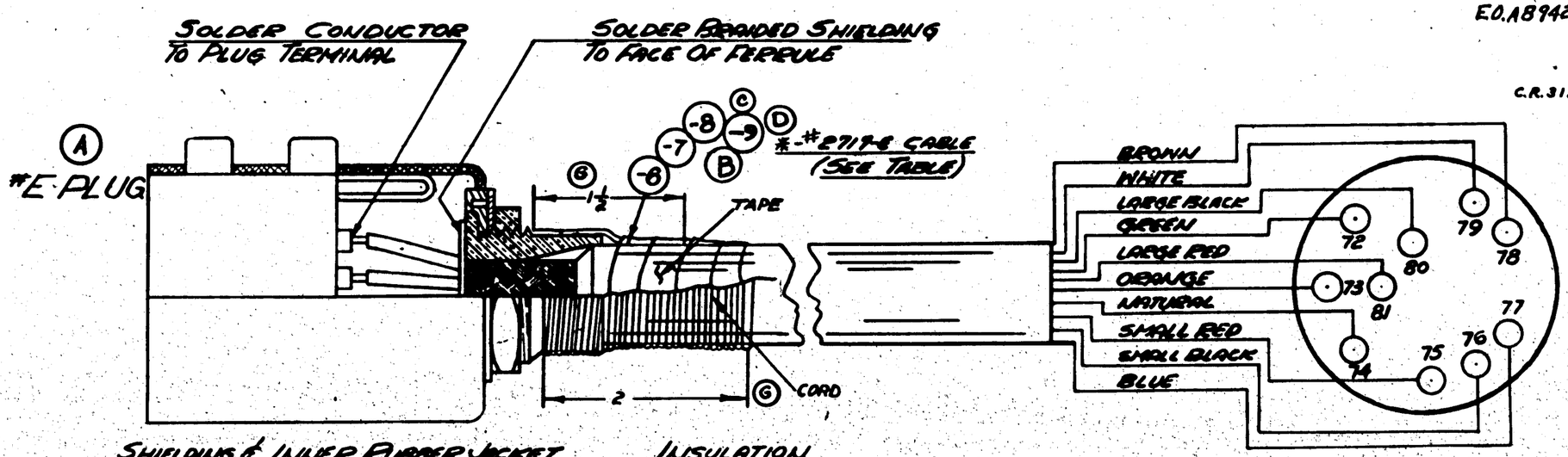

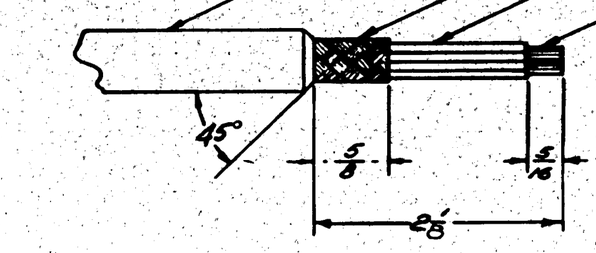

DETAIL SHOWING MANNER IN WHICH CABLE IS CUT FOR PLUG ASSEMBLY

NOTE ©

TO APPLY TAPE & CORD: STARTING DIRECTLY AGAINST LAST THREAD ON FERRULE, WRAP FERRULE & CABLE WITH WHITE ADHESIVE TAPE FOR 1½". THEN CLOSE WRAP CORD OVER TAP FOR 2". THEN APPLY A COAT OF LACQUER TO CORD. THIS IS DONE AT BOTH ENDS OF CABLE.

DASH NUMBER	LENGTH OF CABLE	
-6	162	
-7	100	
-8	86	F
-9	133	D

© H

C91876 #90 & ON
MCR212-1 —C

C91876 #1 TO 89 ALL
ALL BUT NOs (5) 4-64

ASSY. DASH No.	MODEL	HEAT ASSY.	QTY.
-3	PBY-3	28F6955	1
-4	PBY-3	28F6955	1
-4	PBY5A	28F6955	1
-0	PB2Y-3	29J3040	1
-2	PBY5	28F5102	1
-2	PBY5A	28F5102	1

REQUIREMENTS PER AIRPLANE

REPLACES — ASSYS. -0 & -2 PARTS: 2-94 CALC. WT.

REPLACED BY — ASSY. WT.

SCALE: SKETCH

STAMP PART NUMBER WHERE SHOWN

PART No.	STOCK	MATERIAL	SPEC.	2 LH REQ. -0	2 RH REQ. -2	2 LH REQ. -3	2 RH REQ. -4	1 LH REQ. -5	1 RH REQ.
* -9	2717-E X 133								
* -8	2717-E X 86							1	
* -7	2717-E X 100				1				
* -6	#2717-E X 162			1					

* E PLUG

PARTS LIST PER ASSY.

AC / NAVY NONE — HEAT TREAT — NONE — FINISH

DRAFT — CHECK — STRUCT — MAT — APPROV — ENG.

NAME CABLE ASS'Y FURNS - ZA-J. BOX TO ZA CONTROL BOX

CONSOLIDATED AIRCRAFT CORP. SAN DIEGO, CALIF.

OPP. HAND

SIZE D — 29F6405

R.

29F6405

EO-A30445

LET.	ALTERATION	DATE	BY
A	ADDED CABLE LENGTH FOR -7 ON FACE & B/M. ADDED -6 & -7 ON FACE. CHG REF. FROM P.H.B. TO L.H. OF -2 FOR P202 & P-201 IN B/M	4-29-42	[illegible]
B	CREATED-ASS'Y. PER CHG. NOTE.	[illegible]	[illegible]
C	CREATED - ASS'Y. PER CHG. NOTE.	[illegible]	[illegible]
D	CREATED - ASS'Y. PER CHG. NOTE.	[illegible]	[illegible]

MCR 128-E.O. A30622
MCR 153-9-E.O. GA58980 A
MCR 216-E.O. GA94793

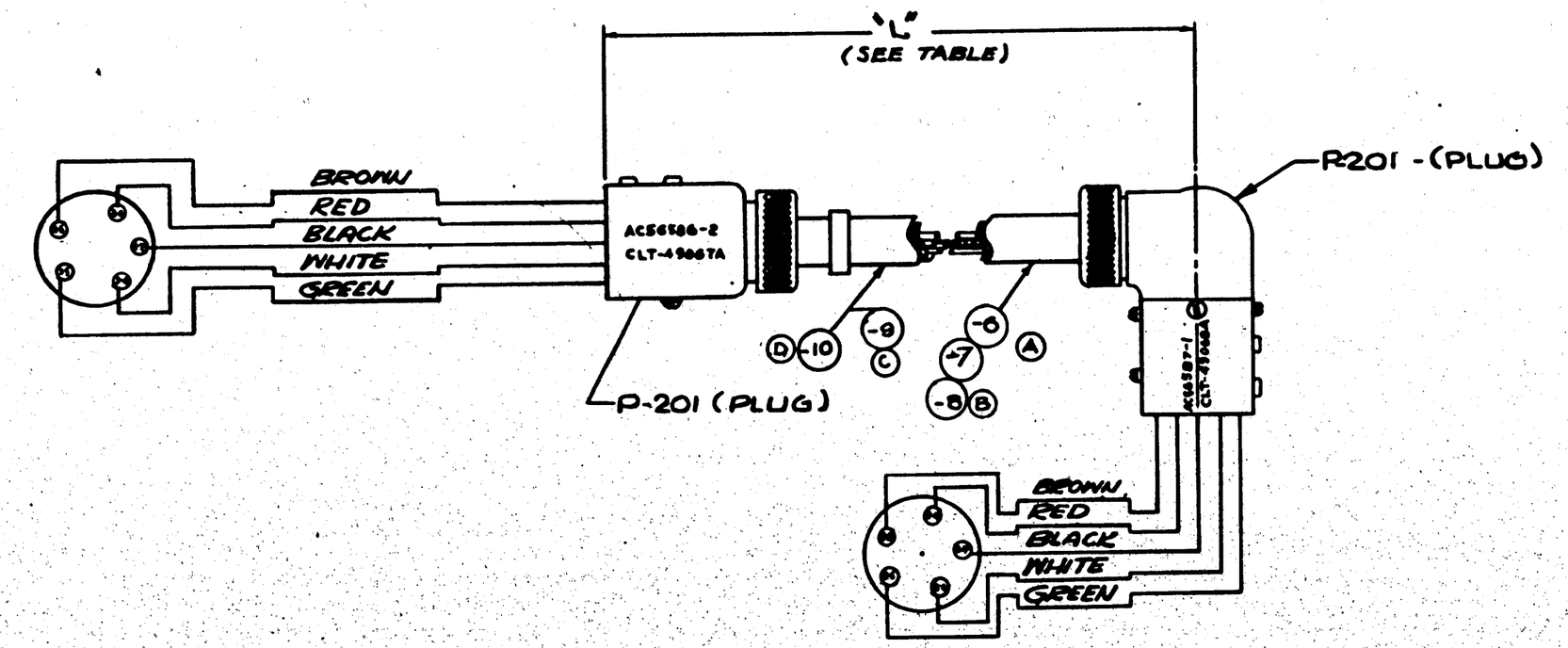

* - DENOTES GOVERNMENT FURNISHED EQUIP.

DASH NO.	L - LENGTH
-6	L-24
-7	L = 90
-8	L = 80"
-9	L = 63"
-10	L = 84

Ⓐ

MCR 216-1
MCR 129 TO MCR 216-1
1 TO MCR 129
C# 13393
MCR 153-9
C# 70496, 77713 & 88746
1 TO MCR 153-9

QUAN. DASH NO.	MODEL	NEXT ASSY.	QUAN.
-5	PB2Y3	29U3040	1
-3	PB2YB	29U3040	1
-2	PB2Y-3	29U3040	1
-4	PBY5A	28F6955	1
-4	PBY5	28F6955	1
-	PBY-5A	28U5009	1
-2	PBY5	28U5009	1

REQUIREMENTS FOR AIRPLANE

REPLACES — Grss. Wt.

REPLACED BY — Adv. Wt.

SCALE

STAMP PART NUMBER WHERE SHOWN

*R202 PLUG (LUNDQUIST TOOL CO)
*P-201 PLUG (LUNDQUIST TOOL CO)

PART No.	STOCK	MATERIAL	SPEC.	LH REQ.	RH REQ.	LH REQ.	RH REQ.	LH REQ.	RH REQ.	LH REQ.	RH REQ.	LH REQ.	RH REQ.
PARTS LIST FOR ASSY.				-0		-2		-3		-4		-5	
* -10	W201 x 84	CABLE (SIMPLEX CABLE)										1	
* -9	W201 x 63	CABLE (SIMPLEX CABLE)								1			
* -8	W201 X 80	CABLE (SIMPLEX CABLE)						1					
- -7	W201 X 90	CABLE (SIMPLEX CABLE)				1							
* -6	W201 X 24	CABLE (SIMPLEX CABLE)		1									

AC		12-16-41	DWG	ENGR. SUPV.	BEB	PACH.	J.C.H
NAVY		PROCESS 2-5-42	2-19-42			2-11-42	L.M
HEAT TREAT	FINISH	DRAFT	CHECK	STRUCT	MAT	AERODY	ENGR

NAME CABLE ASS'Y - FURNS
LM FREQ. POWER

CONSOLIDATED AIRCRAFT CORP. San Diego, Calif.

OPP. HAND None

SIZE D — 29F6508

R

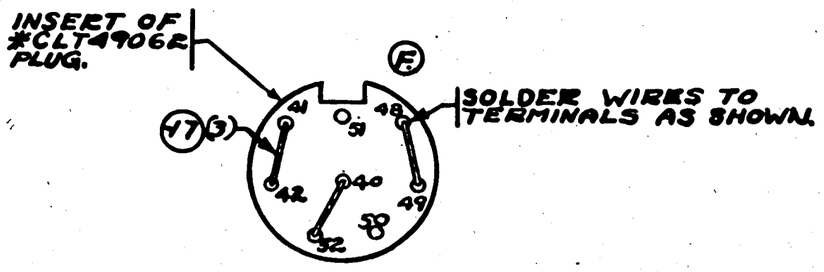

-16 SUB ASS'Y

	LET	ALTERATION	DATE	BY
AC3481	"A"	ADDED -43 TO FACE OF D'WG. CREATED -12 SUB ASS'Y. REPLACED -2 WITH -12 ASS'Y. REQ. PER PLANE BLACK. WT. CHG. NEG.	4-17-42	BAND DURRANCE
A5903 3	"B"	IN LENGTH BLOCK CHANGED LENGTH OF -8 FROM 120 TO 138. REMOVED NOTES "APPROX. - SEE NOTE "C" FOR LENGTH - INSTALLATION" WT. CHG. +.17	3-19-42	BAND DURRANCE
B1308A	C	CREATED -14 SUB ASS'Y. ADDED -15 TO CABLE & LENGTH BLOCK. ADDED NEXT ASS'YS FOR -14 &		
B2612	D	REQ. WT. CHG. NEG. ADDED NOTE 4 FOR PB2Y3 —	3-17-42	BAND DURRANCE
B3510	E	PLUGS" NO WT. CHG. IN NOTE 4 FOR PB2Y3 — PLUGS" ADDED "PB2Y3 MCR 305 & PB2Y3R MCR-117" WT. CHG. NEG.	3-17-42	BAND DURRANCE
MCR238-C	F	ADDED -18 SUB-ASS'Y TO FACE OF D'WG & B/M REMOVED -11 ASS'Y FOR PB2Y3 A/C 3595. WT. CHG. IS -0.5 REMOVED -11 ASS'Y FOR PB2Y3	4-29-42	BAND DURRANCE
	G	ADDED "PARTS A" 918 N "Bodine" TO NOTES. NO WT. CHG.	5-29-42	Wright

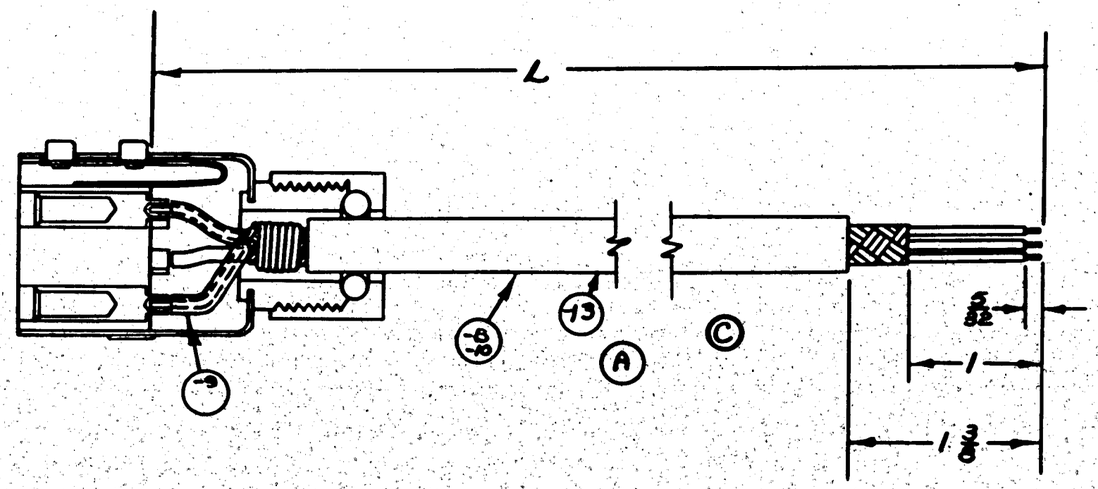

NOTES:
CUTTING LENGTH OF CABLE = NOMINAL LENGTH + 2".
(B) FOR (PBY-5 C"NO. (2)16", PB2Y3 MCR 305 & PB2Y3R
(D) MCR-117, CLT 4906R PLUGS MAY BE
(E) REPLACED WITH CFD 4906R PLUGS.

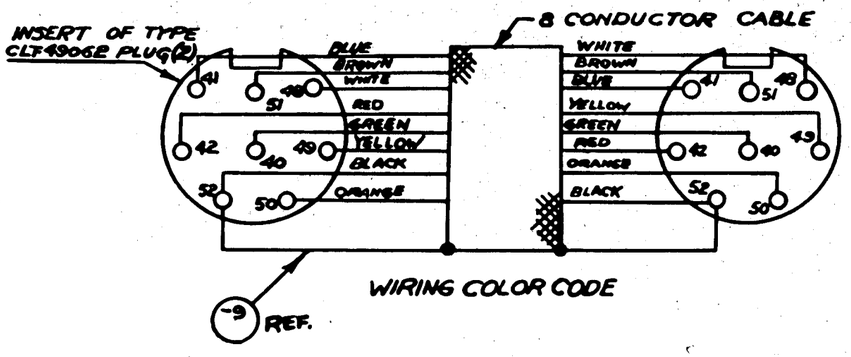

WIRING COLOR CODE

DASH NO.	L = LENGTH	
(B) -8	L = 138	APPROX. LENGTHS ONLY (B)
-9	L = 4"	
-10	L = 110	
(C)		
(A) -13	L = 80"	

*-DENOTES G.F.E.

MCR238B-1	-16	PBY-5A 28F6955	1	
	-16	PBY-5 28F6955	1	
MCR144	-1	PBY-5A 28F6473	1	
MCR144-3	-12	PBY-6 28F6985	1	
SHIPS 1-8 18 ON	-6	PB2Y-3 29U3040	1	
ASSY. DASH NO.	MODEL	NEXT ASSY.	REQ.	

REQUIREMENTS PER AIRPLANE

REPLACES — 4-1 SCALE WT.

REPLACED BY — -16 = .03 ACT. WT.

CLOSE ON DIMENSIONS UNLESS OTHERWISE SPECIFIED ± 1/32 — SCALE SKETCH

STAMP PART NUMBER WHERE SHOWN

PART No	STOCK	MATERIAL	SPEC	LH RH REQ. -0	LH RH REQ. -2	LH RH REQ. -3	LH RH REQ. -4	LH RH REQ. -5
	PARTS LIST PER ASSY.							
*CLT4906R	PLUG						1	
-11	CA-72X3/4						3	
	PARTS IN -16 SUB ASS'Y							
*CLT4906R	PLUG						2	
-9	#18 INSUL.	TINNED COPPER WIRE					2	
* -13		CABLE	8 CONDUCTOR				1	
	PARTS IN -12 SUB ASSY.							
*CLT4906R	PLUG					2		
-9	#18 INSUL.	TINNED COPPER WIRE				2		
* -10		CABLE	8 CONDUCTOR			1		
	PARTS IN -7 SUB ASSY							
*CLT4906R	PLUG				2			
-9	#18 INSUL.	TINNED COPPER WIRE			2			
* -8	138"	CABLE	8 CONDUCTOR		1			
	PARTS IN -6 SUB ASS'Y.							
-7	SUB ASS'Y			1				
-6	SUB ASSY.			1				

A.C.		CHANGE	BODINE	WORDEN	KERR	GROVER	A.J.S.		
NAVY NONE	NONE	4-29-42	WIEST	RR/42		8-24-42			
HEAT TREAT	FINISH	DRAFT	CHECK	STRUCT	MAT	APPROV	ENG		

NAME CABLE ASSY. - FURNS-ZB HOM'G AD'PTR TO PILOTS CONT. BX

OPP HAND —

CONSOLIDATED AIRCRAFT CORP. SAN DIEGO, CALIF

DWG. SIZE D — 29F6676

29F6676 R

E.O. #	LET	ALTERATION	DATE	BY
A59031	A	ADDED 1.1 LBS TO CALC. WT. TITLE "CABLE ASS'Y.---TO INTERNATIONAL JUNC. BOX" WAS TO COM. RCVR. JUNC. BOX. ADDED 1.12 WT. 4/16/42 PUNK		
A6348	B	ADDED -13 CABLE ADDED -12 SUB ASSY. REMOVED -7 FOR PBY-5 UNIT ASSY 29E59756 ON FACE 6 IN B/M CHG'D -11 TO -B. NO WT CHG.	4-8-42	Wright
A9003B	C	CHG'D LENGTH OF -8 FROM 108 TO 46. REMOVED NOTES "APPROX---NOTE" & "TRUE---INSTALLN". ADDED NOTE "APPROX---(REF)". CHG'D TITLE FROM "CABLE---BOX" TO "CABLE---ADAPTER TO ARA RECEIVER". WT. 1.55 LBS WAS 1.12 LBS	4-8-42	Wright
B2611	D	ADDED NOTE #2 TO FACE NO WT CHG.	4-8-42	Wright
B3906	E	CREATED -14 SUB ASSY. ADDED -16 TO FACE 9 B/M. NO WT CHG.	4-8-42	Wright
B3609	F	ADDED PB2Y3 & PB2Y3R TO #2 NOTE. NO WT. CHG.	4-8-42	Wright
MCR 238-C	G	ADDED "PBY-5 MCR 238C" TO NOTE #2. NO WT CHG.	4-29-42	Wright

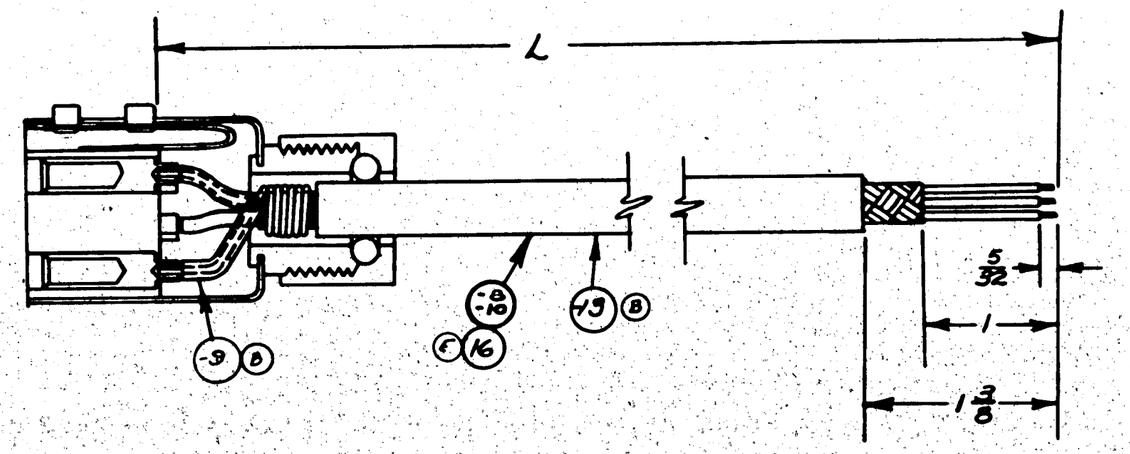

NOTES:

1. CUTTING LENGTH OF CABLE = NOMINAL LENGTH + 2".
2. (D) CLT 49134 PLUG MAY BE REPLACED WITH CFD 49134 PLUG. CLT 49132 PLUG MAY BE REPLACED WITH CFD 49132 PLUG.
   FOR PBY-5A - C NO. (3) 464
   (F) PB2Y3 - MCR 305
   PB2Y3R - MCR R117
   (G) PBY-5 MCR 238C

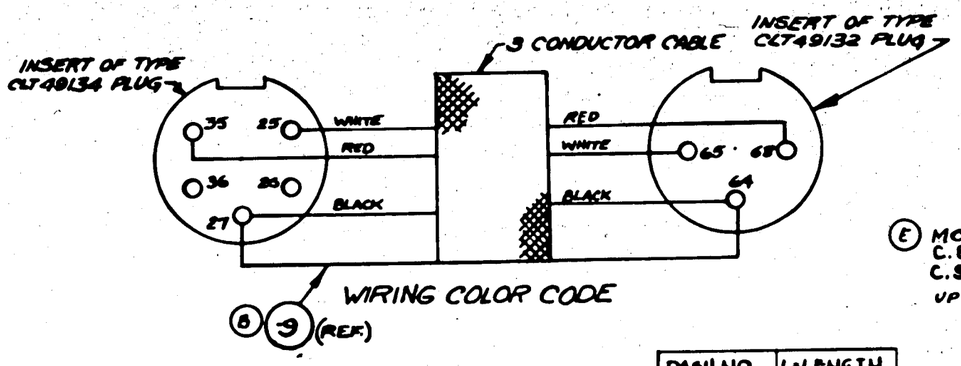

(E) MCR NO. (5) 464 C. 86476 #53 & ON C. 91876 #90 & ON UP TO MCR #247

DASH NO.	L-LENGTH
-8	L=46
-9	L=4
-10	L=108
-13	L=42
(E) -16	L=108

(C) APPROX. LENGTH ONLY (REF)

* - DENOTES G.F.E

ASSY. BASIC NO.	MODEL	NOMEN. ASSY.	REQ.
-12	PBY-5A	28F6855	1
-14	PB2Y-3	29U9040	1
-7	PBY-5A	29F6678	1
-12	PBY-5	28F6855	1
-6	PB2Y-3	29U3040	1

REQUIREMENTS PER AIRPLANE

REPLACES — 1.55 CALC WT.

REPLACED BY — ACT. WT.

STAMP PART NUMBER WHERE SHOWN — SCALE: SKETCH — ± 1/32

PART NO.	STOCK	MATERIAL	SPEC.	LH REQ.	RH REQ.	LH REQ.	RH REQ.	LH REQ.	RH REQ.	LH REQ.	RH REQ.	LH REQ.	RH REQ.
PARTS LIST PER ASSY.				-0		-2		-3		-4		-5	
*CLT49134	PLUG			1									
*CLT49132	PLUG				1								
-9	#18 INSUL TINNED COPPER WIRE			2									
29F6677-6	CABLE = 108 3 CONDUCTOR			1									
	PARTS IN -14 SUB ASS'Y												
*CLT49134	PLUG					1							
*CLT49132	PLUG						1						
-9	#18 INSUL TINNED COPPER WIRE					2							
29F6677-13	CABLE = 42 3 CONDUCTOR					1							
	PARTS IN -12 SUB ASS'Y												
*CLT49134	PLUG							1					
*CLT49132	PLUG								1				
-9	#18 INSUL TINNED COPPER WIRE							2					
29F6677-10	CABLE = 9" 3 CONDUCTOR							1					
	PARTS IN -7 SUB ASS'Y												
*CLT49134	PLUG									1			
*CLT49132	PLUG										1		
-9	#18 INSUL TINNED COPPER WIRE									2			
29F6677-8	CABLE = 96 3 CONDUCTOR									1			
	PARTS IN -6 SUB ASS'Y												
	-7 SUB ASS'Y												
	-8 SUB ASS'Y												

A.C.		CRONCE	4-29-42
NAVY NONE	NONE	DRAFT	CHECK
HEAT TREAT	FINISH		

CRONCE 4-29-42	WORSLEY	KERR	GROVES	ACS		
WEST 5/2/42	G.E. RAPP 5-29-42					
CHECK	STRUCT	MAT	APPROV	ENG		

NAME CABLE ASS'Y-FURNS-ZB HOMING ADAPTR TO ARA RECEIVER

CONSOLIDATED AIRCRAFT CORP. SAN DIEGO, CALIF.

OPP. HAND ——

DWG. D SIZE 29F6677

29F6677 R

LET	ALTERATION	DATE	BY
A 63485	ON FACE ADDED -13. IN L'GTH BLOCK		
	ADDED -13. L'GTH 14. ON FACE & IN		
	IN -7 SUBASS'Y CH'GED -11 TO -9.		
	REMOVED -11 FROM L'GTH BLOCK & FACE		
	CREATED -12 SUB ASS'Y SAME		
	AS -7 EXCEPT -13 CABLE REPLACES		
	-10. IN REQ. BLOCK -12 WAS -7 NO WT CHG.		
	& P/N 28F6955 WAS 28F5475.	3-20-43	
A 59032	B AT L'GTH BLOCK REMOVED NOTE		
	"SEE NOTE" & FROM FACE NOTE		
	"TRUE LENGTH OF CABLE		
	..INSTALLATION" IN L'GTH		
	BLOCK 22 WAS 48. ADDED 22		
	TO -8 IN B/M. ADDED WT. 16 TO CHG. WT.	3-20-43	
B 2610	C ADDED NOTE FOR PBY-5 A C13595		
	"CLT-49133 PLUGS MAY BE	NO WT CHG.	
	REPLACED WITH CFD-49133 PLUGS"	3-22-43	
B 3511	D ADDED "PB2Y3-MCR-305 & PB2Y3R		
	MCR-R117 TO NOTE "CLT-49133	NO WT CHG.	
	PLUGS ..... CFD-49133 PLUGS.	3-22-43	
	E REMOVED "PBY-5A C13595" FROM		
	NOTE "CLT-49133 PLUGS CFD-49133		
	PLUGS. CORRECTED WT. -6 SUB	3-24-43	
	ASS'Y & ADDED WT 3 BLOCK		
	WITH WT 3 -6 -7 & -12 SUB ASS'YS		
	CANCELLED -13 FOR PBY-5A		
MCR 238-C	F ADDED PARTS MCR 238C		
	TO NOTES NO WT CHG.	4-23-43	

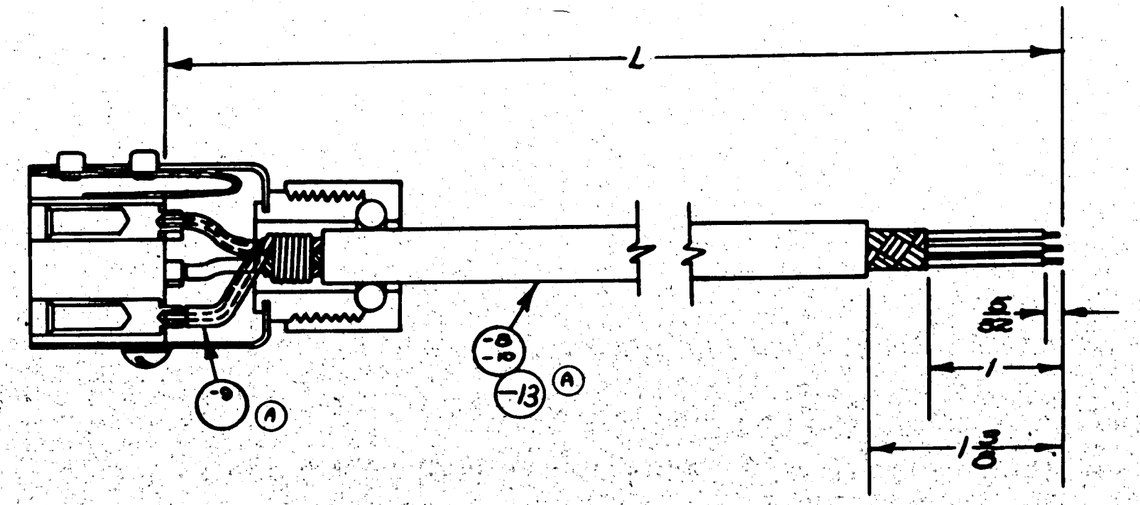

NOTES:
CUTTING LENGTH OF CABLE = NOMINAL LENGTH + 2"

(B) (C) (D) (E) (F)
FOR PB2Y-3, MCR-305 / PB2Y-3R, MCR-R117 & PBY-5 MCR 238C { CLT-49133 PLUGS MAY BE REPLACED WITH CFD-49133 PLUGS.

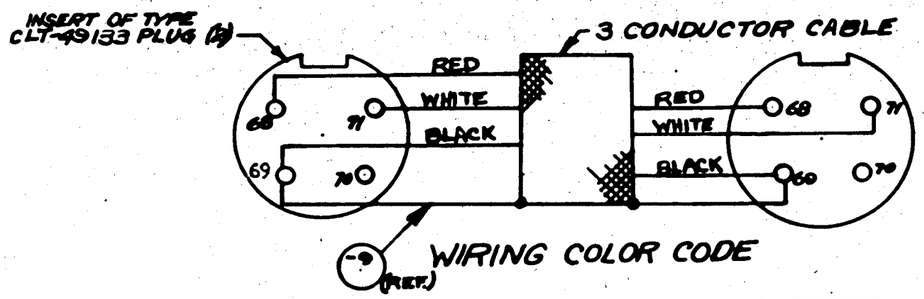

DASH NO.	L = LENGTH
-8	L = 22
-9	L = 4
-10	L = 18
-13	L = 14

APPROX. LENGTHS ONLY (B)

(A)

(E)

SUB ASS'Y	WT.
-6	.34
-7	.32
-12	.29

ONLY "88976 - # 53404 - # MCR-194-3" SHRS 1-3, 04 ON

* - DENOTES G.F.E.

ASSY. DASH NO.	MODEL	NEXT ASSY.	QUAN.
REQUIREMENTS PER AIRPLANE			
-7	PBY-3A	28F6473	1
-12	PBY-5	28F6965	1
-6	PB2Y-3	29U3040	1

REPLACES — .16 CALC. WT.
REPLACED BY — ACT. WT.
SCALE: SKETCH
± 1/32
STAMP PART NUMBER WHERE SHOWN

PART No.	STOCK	MATERIAL	SPEC.	LH REQ.	RH REQ.	LH REQ.	RH REQ.	LH REQ.	RH REQ.	LH REQ.	RH REQ.
PARTS LIST PER ASSY.				-0		-2		-3		-4	-12
	(CLT49133 PLUG			2							
-9	#16 INSUL.	TINNED COPPER WIRE		1							
* -13		CABLE 3 CONDUCTOR		1							
	PARTS IN - 12 SUB ASS'Y										
	(CLT49133 PLUG			2							
-9	#16 INSUL.	TINNED COPPER WIRE		1							
* -10		CABLE 3 CONDUCTOR		1							
	PARTS IN -7 SUB ASS'Y										
	(CLT49133 PLUG			2							
-9	#16 INSUL.	TINNED COPPER WIRE		1							
* -8		CABLE X22 3 CONDUCTOR		1							
	PARTS IN -6 SUB ASS'Y.										
-12	SUB ASS'Y										
-7	SUB ASS'Y										
-6	SUB ASS'Y										

AC		ORIGINAL	5-1-42	5-8-42		8-19-43	
NAVY NONE	NONE	DRAFT	CHECK	STRUCT	MAT	APPROV	SHP.
HEAT TREAT	FINISH						

NAME CABLE ASSY-FURNS-ZB HOM G ADAPTER TO SWITCH'G RELAY
CONSOLIDATED AIRCRAFT CORP. SAN DIEGO, CALIF.
OPP. HAND
SPEC. D SHEET 29F6678

29F6678 R

LTR	ALTERATION	DATE	BY
A	CREATED - ASSY'S -6, -7 & -8 WAS * ESO-		
	677960-3, REVISED REQ/PLANE, NO WT CHG	5-14-43	D DAY
B	IN LENGTH BLOCK FOR -0 (REQ) WAS (888)		
	REMOVED NOTE 2, ADDED CALC. WT. 143#	5-18-43	D DAY
	TO WT. BLOCK - NO WT. CHG		
C	CREATED - 4 ASSY, REVISED REQ/PLANE		
	WT. CHG. NEG.	5-19-43	D DAY
D	CREATED - 5 ASSY'S, REVISED REQ/PLANE		
	WT. CHG. NEG.	5-19-43	D DAY
E	CHG'D RESTRICTIONS OF -3 FOR-		
	PBY-5 FROM "90 & ON" TO "80 TO		
	MCR 238C: IN REQ BLK ADDED		
	-4 PBY-5 "A" (1) REQUIRED		
F	ADDED TO MCR 238C, NO WT CHG	4-21-44	[illegible]
	* 242 WAS 230, PT-5 CABLE		
	* 242 WAS PT-5 CABLE x 230		
	WT. CHG. NEG.	8-3-44	[illegible]

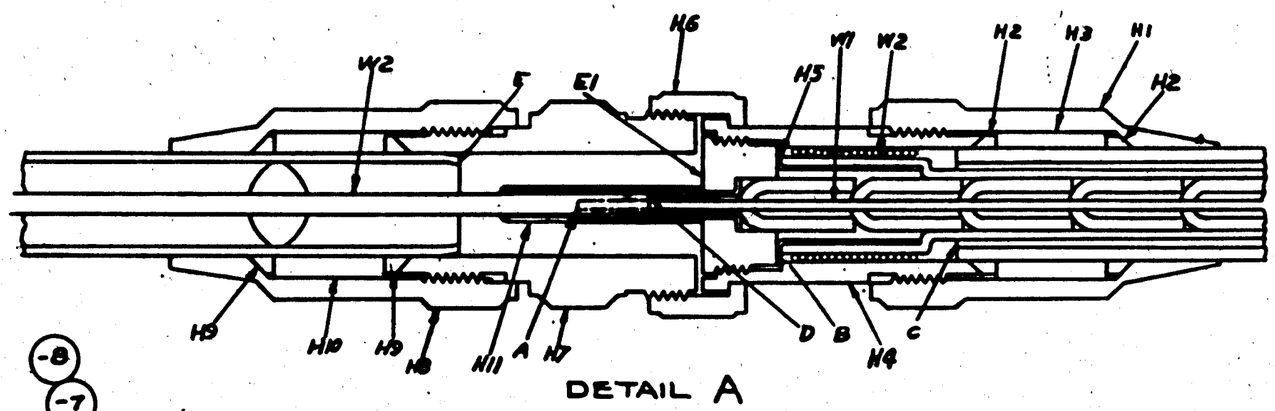

DETAIL A

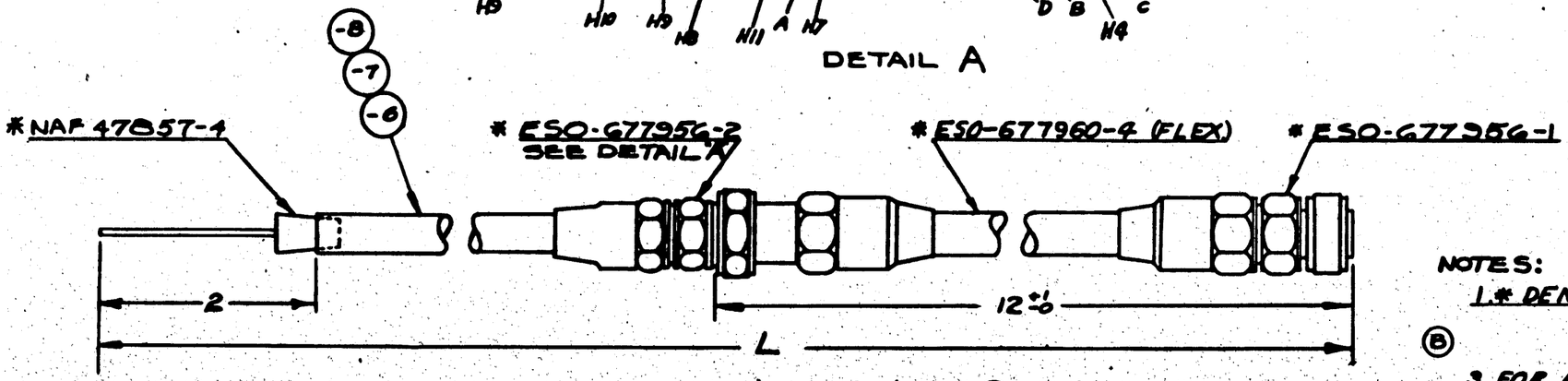

FOR -0, -2 & -3 ASSYS. ©

NOTES:

1. * DENOTES G.F.E.

(B)

2. FOR ASSY OF ESO-677956-1 SEE 29F6836

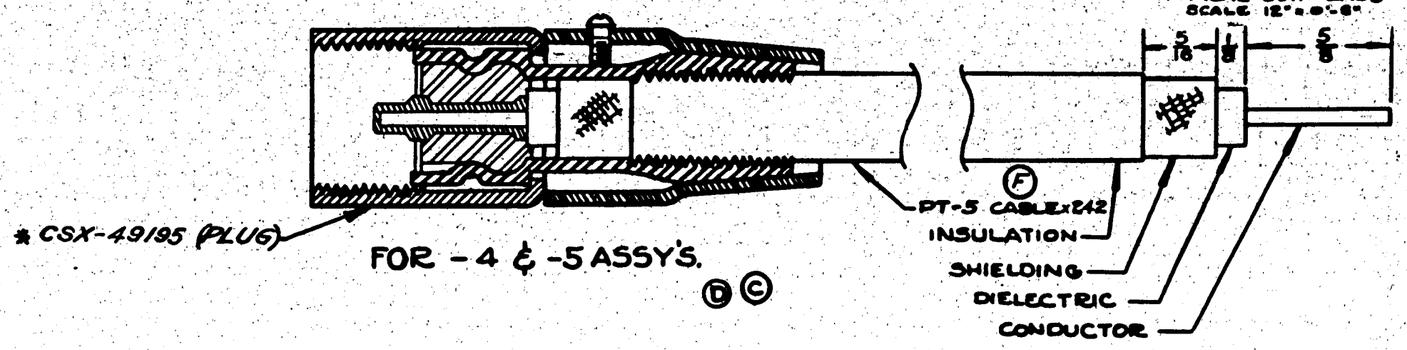

FOR -4 & -5 ASSY'S.

(D) (C)

ASSEMBLY PROCEDURE FOR DETAIL A

LOOSEN NUT H6. LOOSEN NUT H1 AND PASS WITH H2 & H3 ALONG LINE A DISTANCE OF ABOUT 3 IN. REMOVE E1 & H5 FROM SLEEVE H8. PASS H8 WITH NUT H6 OVER FLEX LINE. REMOVE RUBBER & COTTON INSULATION FOR INDICATED DISTANCE AC. REMOVE SHIELDING FOR A DISTANCE AB. REMOVE 2 END BEADS AND REPLACE WITH 2 OR 3 BH-262 BAKELITE BEADS. FLARE SHIELDING & SLIDE FERRULE H5 UNDER SHIELDING. SOLDER SHIELDING TO H5 WHILE SERVING & SOLDERING 1 LAYER OF -5 (#30 GAGE) TINNED COPPER WIRE SECURELY AROUND SHIELDING. PASS E1 OVER A. SOLDER INNER CONDUCTOR TO CONTACT POINT & TRIM EXCESS. SOLDER H11 TO CONTACT OF E1. ASSEMBLE E1 IN H4. DO NOT ROTATE E1. ASSEMBLE H1 & PARTS ON H4 AS SHOWN. HOLD H4 & LINE SECURE WHILE TIGHTENING H1. REMOVE OUTER CONDUCTOR OF ALUMINUM LINE FOR 1/2 IN. PASS H8, H9, H10 & H7 ALONG LINE ABOUT 3 IN CAREFULLY SOLDER W2 IN H11. TIGHTEN H8 ON THREAD OF H7. TIGHTEN H8 ON H7.

DASH NO.	L = LENGTH OF CABLE
-0	226
-2	128
-3	100
-4	100
-5	242

MCR 238C → -4 PBY-5 29F6835 1
MCR 305 → -5 PBY-5 29F6784 1
MCR 222-1 → -4 PBY-5A 28F6835-2 1
* 90 TO MCR 238C → -3 PBY-5 28F6835 1
MCR 144 → -2 PBY-5A 28F3475 1
* 1 TO MCR 305 → -0 PBY-5 29F6784 1

ASSY. DASH NO.	MODEL	NEXT ASSY.	QUAN.

REQUIREMENTS PER AIRPLANE

REPLACED — L43# Quad. Wt.

REPLACED BY — Asy. Wt.

SCALE SKETCH

STAMP PART NUMBER WHERE SHOWN

PART No	STOCK	MATERIAL	SPEC.	LH RH REQ. -0	LH RH REQ. -2	LH RH REQ. -3	LH RH REQ. -4	LH RH REQ. -5
	PARTS LIST PER ASSY.							
				1 1	1 1	1 1	1/2 1/2	
* PT-5	CABLE x 242							
* CSX-49195	PLUG							
NAF 47857-4				1	1	1		
* ESO 677956-1				1	1	1		
* ESO 677956-2 (BELL TEL. LAB. PART NO.)				1	1	1		
* ESO 677960-4				1	1			
* -8	ESO 677960-3 x 248							
* -7	ESO 677960-3 x 113				1			
* -6	ESO 677960-3 x 66					1		

AC		Tracing						
NAVY NONE	NONE	MATERIAL						
HEAT TREAT	FINISH	DRAFT	CHECK	STRUCT	MAT	APPROV	DWG	

NAME CABLE ASSY. - FURNS. ZB ANTENNA TO ZB HOMING ADAPTER

OPP. HAND

CONSOLIDATED AIRCRAFT CORP. SAN DIEGO, CALIF.

DWG. D SIZE 29F6835

R 29F6835

LET	ALTERATION	DATE	BY

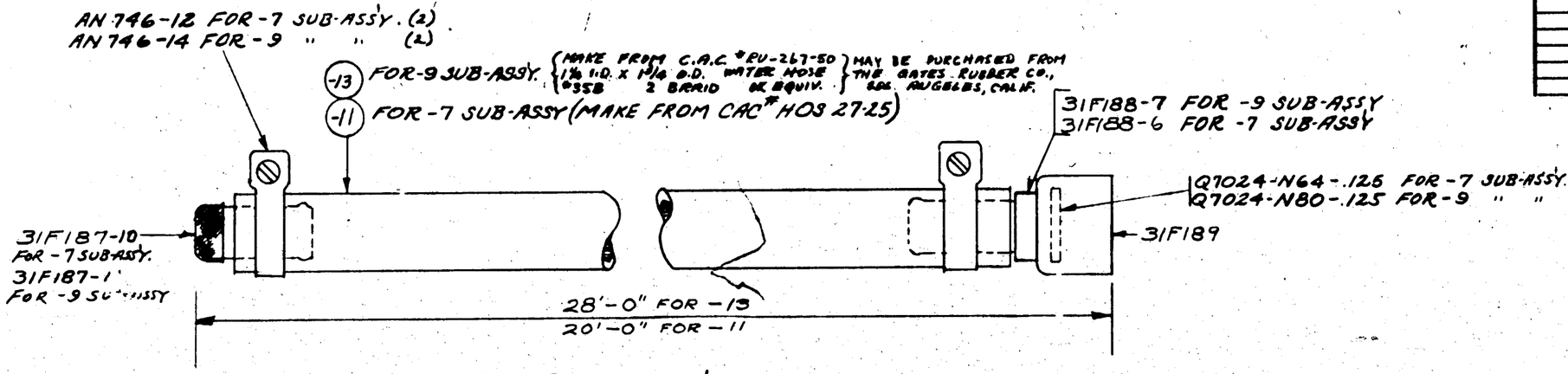

-7 & -9 SUB ASS'YS

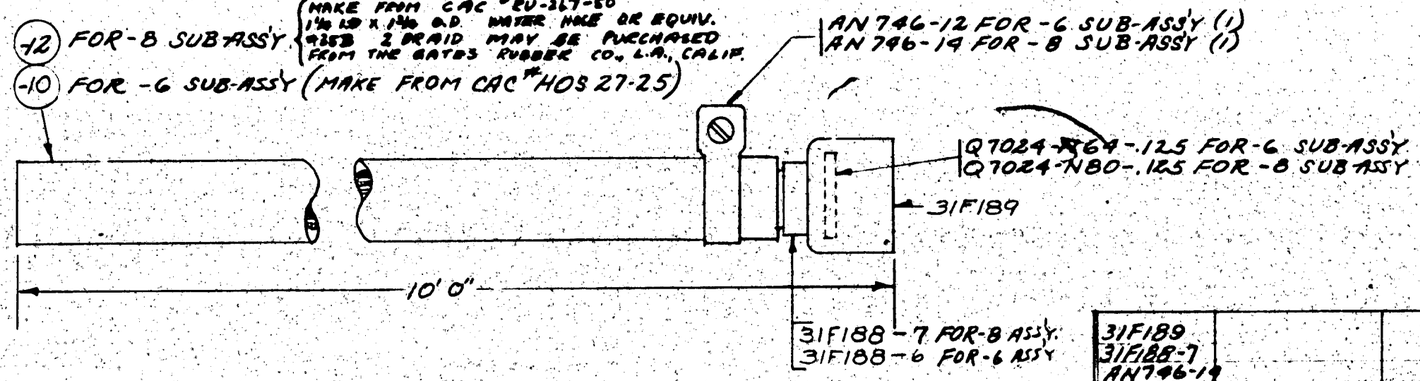

-6 & -8 SUB ASS'YS.

WT. OF -6 = 6.28
-7 = 12.21
-8 =
-9 =

CHG 37(1)

ASSY. DASH No.	MODEL	NEXT ASSY.	REQ.
-9	PBY-5	28F5380	1
-8	PBY-5	28F5380	1
-7	XP4Y-1	31F156	1
-6	XP4Y-1	31F156	1

REQUIREMENTS PER AIRPLANE

REPLACES	NOTED CALC. WT.
REPLACED BY	ACT. WT.
LIGHT OR DISCOLORING UNLESS OTHERWISE SPECIFIED + 1/32	SCALE 6"=1'-0"

STAMP PART NUMBER WHERE SHOWN

PART No.	STOCK	MATERIAL	SPEC.	LH REQ.	RH REQ.	LH REQ.	RH REQ.	LH REQ.	RH REQ.	LH REQ.	RH REQ.	LH REQ.	RH REQ.
PARTS LIST PER ASSY.				-0		-2		-3		-4		-5	
31F189				1									
31F188-7				1									
AN 746-14				2									
31F187-11				1									
Q7024-N80-.125 WASHER				1									
-13 1⅛ I.D. X 28 FT. MAKE FROM C.A.C.# EU-267-50 #358 WATER HOSE COMM.				1									
-9 SUB-ASS'Y.													
AN 746-14						1							
31F188-7						1							
31F189						1							
Q7024-N80-.125						1							
-12 1¼ X 10 FT. MAKE FROM C.A.C.# EU-267-50 #358 WATER HOSE COMM.						1							
-8 SUB-ASS'Y.													
Q7024-N64-.125 WASHER NEOPRENE								1					
31F187-10								1					
31F188-6								1					
AN 746-12								2					
31F189								1					
-11 WATER HOSE 1-1/2 CAC# HOS 27-25 20' COMM.								1					
-7 SUB-ASS'Y.													
Q7024-N64-.125 WASHER NEOPRENE										1			
31F188-6										1			
31F189										1			
AN 746-12										2			
-10 1" I.D. X 10' WATER HOSE CAC# HOS 27-25 COMM.												1	
-6 SUB-ASS'Y.													

AC		HKREY	10/5/42
NAVY NOTED	NONE		
HEAT TREAT	FINISH	DRAFT	CHECK / STRUCT / MAT / APPROV / ENG.

NAME: HOSE-ASS'Y-FURN'S-BILGE-PUMP.

CONSOLIDATED AIRCRAFT CORP. SAN DIEGO, CALIF.

OPP. HAND NONE

DWG. SIZE D — 31F177

MODEL	LET	ALTERATION	DATE	BY
	A	ADDED -6 CASTING AND 2 NOTE (ROUGH CASTING).		
	B	NOTE ON ADD "DRILL No 17 THRU 3 HOLES."		
28-5ME & F & SER. 220	C	ADDED HOLE IN CASTING (DRILL No 17)	11-17-41	
	D	3/32 HOLE ADDED	2-24-42	
	E	ADDED HOLES & SPOT FACING	3-24-42	
	F	ADD [illegible]	4-6-42	
	G	ON BKD 1/4 WAS 1/8	7-1-41	
	H	ADDED M-ADT MIN. SPEC.	12-8-41	
	J	DRILL F (.257) WAS 1/4	1-16-42	
	K	ADDED "BEVEL 1/16" x 45°".	5-8-42	
	L	CHG'D SPEC. FROM 57-74-1 GR. II TO 57-74-1C GR. I N.T. & H.T. FROM "NONE" TO "32,000 #/□" WET. CHG. NOS	5-8-42	
MCR16-J	M	REVS'D RE-AT'S 7 AIRPLANES BLOCK NO WT CH'G	3/12/42	
	N	".266 DIA. HOLE THRU" WAS ".DRILL "F" (.257) THRU" NO WT CH'G	3/23/43	

ALLOW 1/32 DRAFT

ALLOW 1/16 DRAFT ON BOTH OUTSIDE FACES BEVEL 1/16" x 45° (K)

1/8R

2 5/32

1/2

3/16 — 2 7/16 — 3/16

SPOT FACE 7/8 DIA. 3 PLACES ONLY

DRILL #40 (.098) G PILOT HOLES

(G) 1 13/32

(E)

9/32

9/32

(D) 9/32 LINE DRILL

PART NO. HERE

1/8R (C)

1/4

1/4

3 3/16

1 13/16

3/4

9/32

3/16 — 3/16

1/2R

(F) SPOT FACE 1 1/8 DIA TO REMOVE DRAFT FROM THIS AREA BOTH OUTSIDE FACES.

1 9/16 HOLD

5/16

3/8

3/8R

5/8 REF

(J) .266 DIA HOLE THRU

(D) (M)

2 1/4

1 13/16

7/32

(A) (-6) ROUGH CASTING

DRILL 1/2 THRU BOTH SIDES

C 13585

C 11876 "346 ON

SHIPS #1 TO 434

MCR16-J

ASSY DASH No.	MODEL	NEXT ASSY	REQ
	PBY-5A	28F5657	2
	XB-32	32F2010 1/2	1
	PBY-5	28F5657	2
	PBY-5B	28F5657	2
	28-5MC, AMC	28F5657	2 EA.
	28-5MA, ME	28F5657	2 EA.
	B29D	32F2010 1/2	1
	B29C	32F2010 1/2	1
	LO-30	32F2010 1/2	1
	PB2Y-3	28F7658	2
	B-24A	32F2017	1

REQUIREMENTS PER AIRPLANE

REPLACES — CALC WT

REPLACED BY — ACT WT

LIMIT ON DIMENSIONS UNLESS OTHERWISE SPECIFIED: ± 1/32

SCALE 12" = 1'-0

STAMP PART NUMBER WHERE SHOWN

PART NO.	STOCK	MATERIAL	SPEC.	LH REQ.	RH REQ.	LH REQ.	RH REQ.	LH REQ.	RH REQ.	LH REQ.	RH REQ.	LH REQ.	RH REQ.
-6 (B)	CASTING	MAG ALLOY	57-74-1C GR. I										
PARTS LIST PER ASSY.				-0		-2		-3		-4		-5	

AC 32,000 #/□	C.A.C. 21-32-C1	JENKINS		
NAVY NONE	M-407	3/19/43		
HEAT TREAT	FINISH	DRAFT	ENGR	STRUCT	MAT	APPROV	DATE

NAME BRACKET-FURNS. PILOT'S SHOULDER STRAP

CONSOLIDATED AIRCRAFT CORP. SAN DIEGO, CALIF.

D.P. HAND NONE

SIZE D — 32F2027

S.K. F

CHECKED [illegible] DATE 5/29/41

E.O. #A30545

E.O. A54776A

E.O. #B2107
MCR #285-A-1
E.O. B20294

LET	ALTERATION	DATE	BY
A	ADDED NOTES "5/16 DIA.---32F2134-13 (REF) & 1/4 DIA.---32F2134-13 (REF) (NEG. WT. CHG.)	5-9-42	WALTHER
B	-6 WAS -0 NO WT. CH'G.	5-22-42	SLIGH
C	CREATED -2 ASS'Y WT. CHG. NEG.	5-23-42	SLIGH
D	REVISED REQ PER AIRPLANE BLOCK WT. CHG. NEG.	7-13-43	RINDF
E	ON B/M CHANGED REQ PER PLANE BLOCK: -- ADDED -0 FOR P24 D & E, NA. 32F2134 4 REQ. LIMITED TO MCR 531C(6) & ON; CHANGED LIMIT ON -0, AR48 D & E NA. 32F2134-3, 3 REQ FROM "MCR 120 A(1) TO MCR 120-4" TO "MCR 285 A(1) TO MCR 531C(9)"; REMOVED REQ. FOR -0, B24 D & E, NA. 32F2134-2 REQ. MCR 120-4; LIMITED -2 FOR AP4 D & E FROM MCR 534 TO MCR 531C(6) [NA. 32F2134-65, 1 REQ.]	7-8-43	Scott

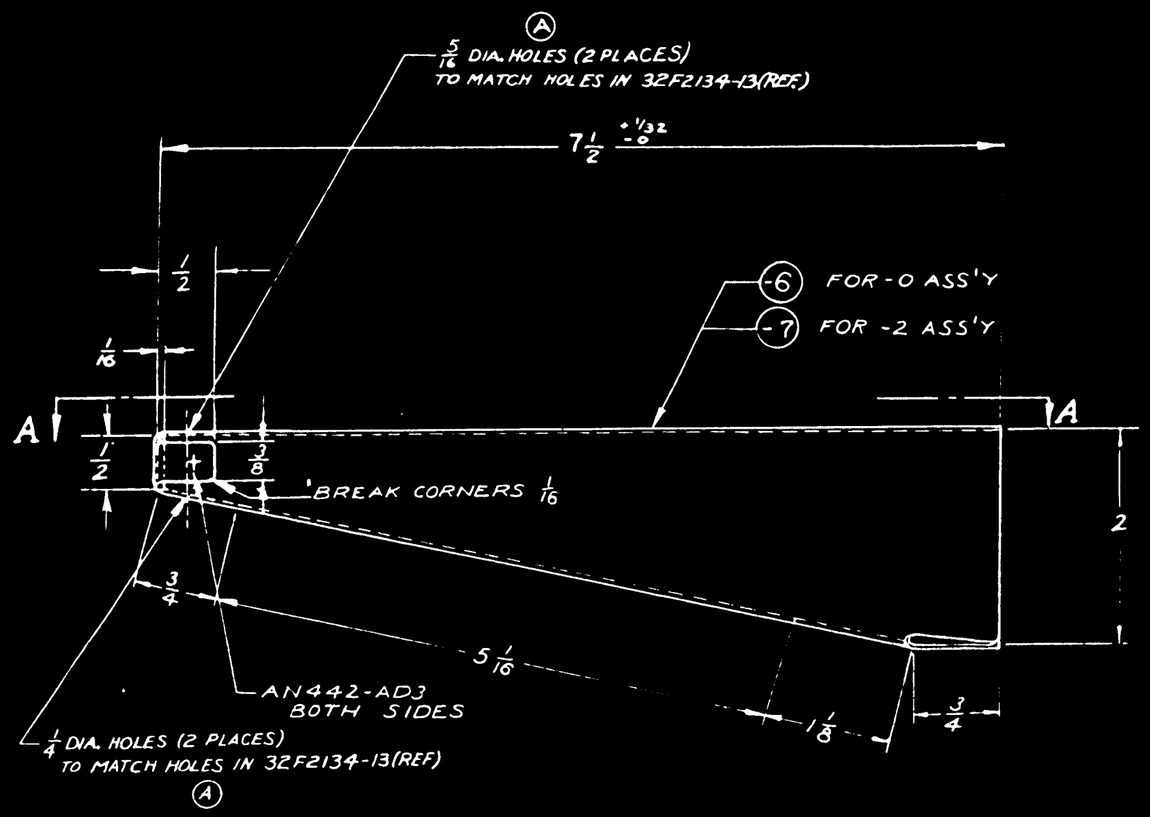

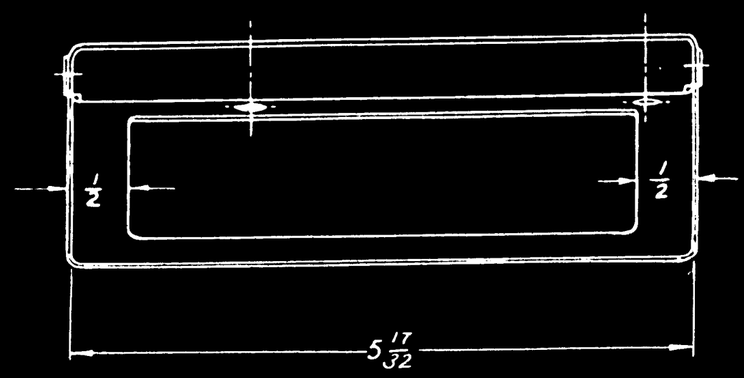

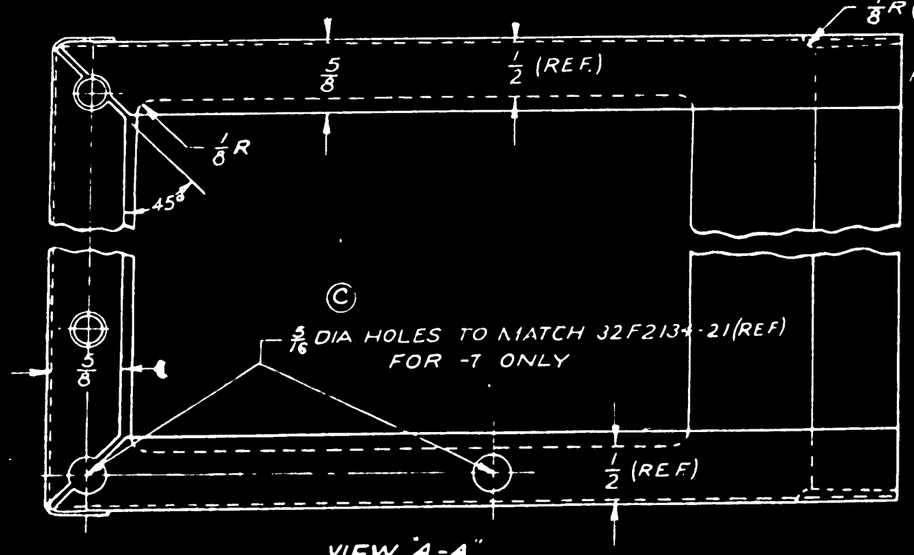

VIEW "A-A"

MCR 531-C-910 MCR 531A1
MCR 285A-1 TO MCR 531C(9)
(E) MCR 234 TO MCR 531C(6)
(E) MCR 531C(9) & ON
CONT. #91876 →
(E) MCR 285A(1) TO MCR 531C(9)
#1 TO MCR #285-1
MCR #285-1 TO MCR #285-A1

ALL BUT S.O. 846-110

IDENTICAL TO 32F2136-6

ASSY. SUBDIV. NO.	MODEL	NEXT ASSY	REQ'D
-0	B24-B	32F2134	5
-0	B24-D	32F2134-65	1
-2	B24-D	32F2134-65	1
-3	B24-F	32F2134-65	1
-0	B24-H	32F2134	4
-0	B24-O	32F2134	4
-0	PBY-5B	32F2134	2
-0	PBY6	32F2134	2
-0	B24D	32F2134	3
-0	LB30	32F2134	2
-0	B24D	32F2134	2
-0	B24D	32F2134	5
-0	B24-C	32F2134	2
-0	B24-A	32F2134-3	1
-0	B24-A	32F2134-6	1
-0	B24 #7	32F2134-3	1
-0	B24 #7	32F2134-6	1
-0	28-3AMC	32F2134	2
-0	PB2Y-3	32F2134	1
-0	28-3MC	32F2134	2
-0	28-3MA	32F2134	2
-0	28-3ME	32F2134	2

REQUIREMENTS PER AIRPLANE

REPLACES 32F2134-6 .19# CALC WT

REPLACED BY ACT WT

SCALE 12"=1'0" 1/32

STAMP PART NUMBER WHERE SHOWN

NOTE:
ALL BEND RADII 3/32

FINISH CODE	
Z	ANODIC TREATMENT
P	P-27 PRIMER
AP	ALUMINIZED PRIMER
C	CADMIUM PLATE

PART NO	STOCK	MATERIAL	SPEC.	LH REQ'D	RH REQ'D	LH REQ'D	RH REQ'D	LH REQ'D	RH REQ'D	LH REQ'D	RH REQ'D	LH REQ'D	RH REQ'D
				-0		-2		-3		-4		-5	
-7	032 x 8 1/8 x 9 5/8	ALC-2450	11067 I										
-6	032 x 8 1/8 x 9 5/8	ALC-2450	11067 I										

PARTS LIST PER ASSY.

AN442-AD3

AC NONE
NAVY
HEAT TREAT
FINISH
2-P-FBG OUTSIDE 2-1BLK HT. RES ENAM IN
DRAFT
CHECK
STRUCT.
MAT
ASSEMBLY
INSP.

NAME DUCT - FURNS - DEFROSTER HEATING SYS.
CONSOLIDATED AIRCRAFT CORP. San Diego, Calif.

OPP. HAND NONE
SIZE D
DWG. 32F3418

ENG. FILE

32F3418 R

LET	ALTERATION	DATE	BY
A	[illegible] PER MASTER BLACK.		
B	ADDED [illegible] 32F7655(1) [illegible] 32F7655(2)(ALL). NO WT. CHG.		
C	ADD PBY-5A & PBY-5A PLANS. CHG. IN [illegible]		

EQA65124
M.C.R. 97

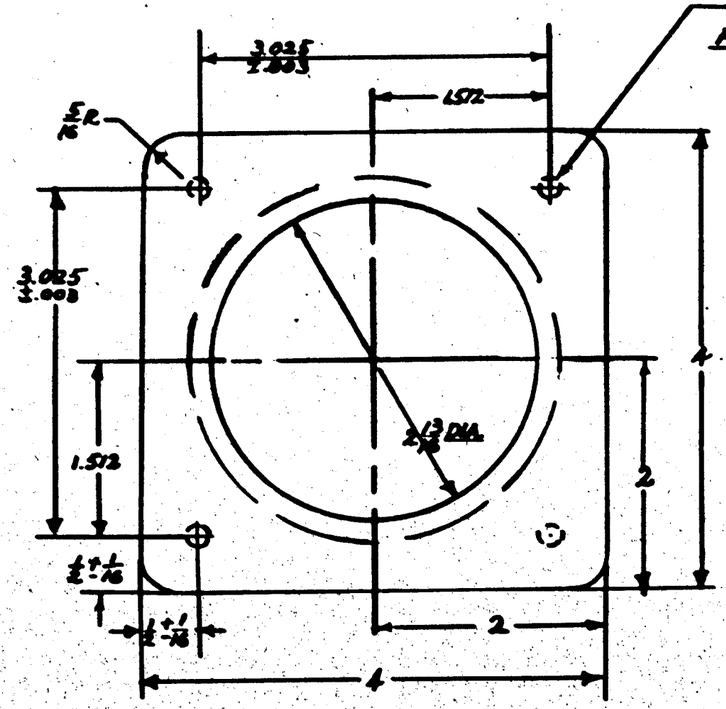

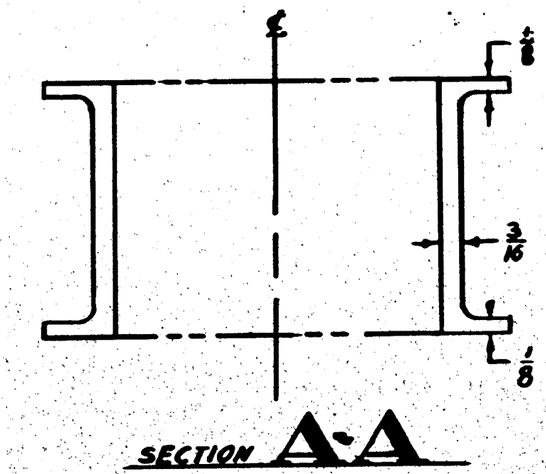

SECTION A-A

© NOTE: MATL. TO BE:
1. AL. AL. 75T4 SPEC. AN-QQ-A-390 CL II 29,000 P.S.I. OR
2. AL. AL. S-195T6 SPEC. AN-A-5 CL II. 32,000 P.S.I.

NOTE:
ALL FILLETS 1/8 R.

CAST THESE SURFACES SMOOTH.

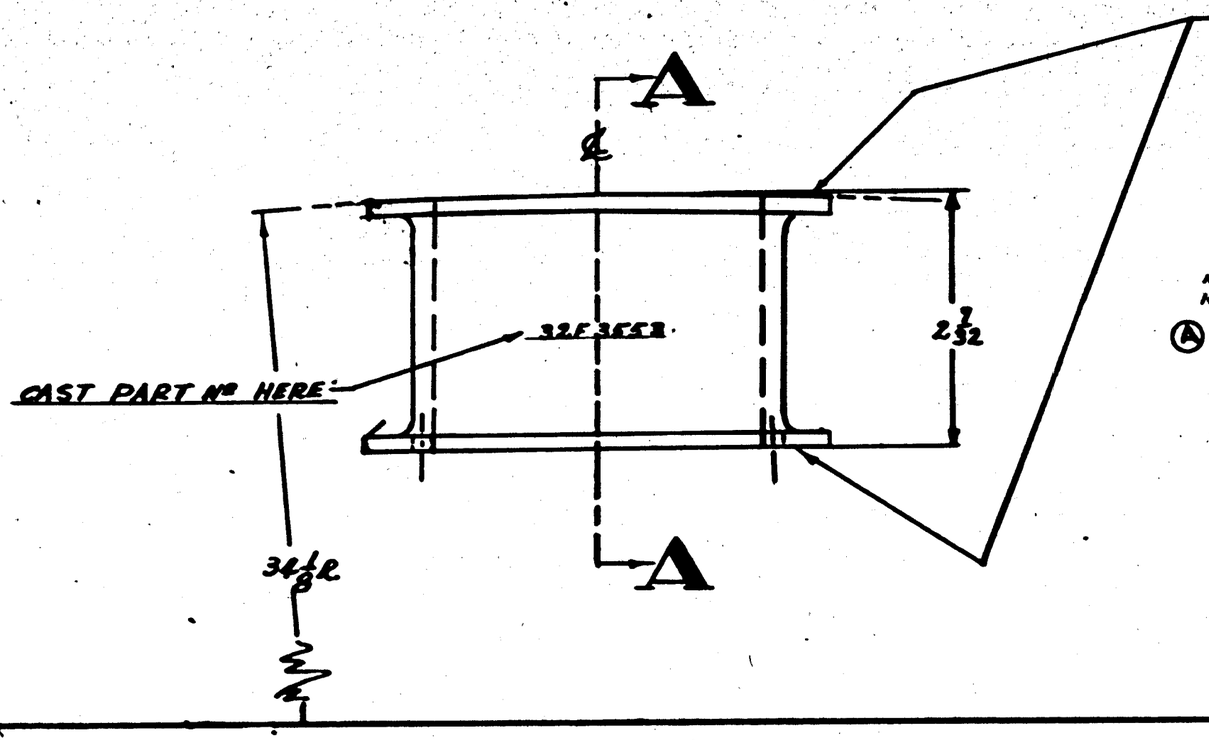

CLASS III INSPECTION

© M.C.R. 97 NO # ON 3

Ⓐ 84-167

ASSY DASH NO.	MODEL	NEXT ASSY	NOS
	PBY-5A	28A5198	1
	PBY-5	28A5198	1
	B24E	32F7655	1
	B24D	32F7655	1
	PB2Y-3	32F7655	1
	B24D	32F7655	1
	LB30	32F7655	1

REQUIREMENTS PER AIRPLANE

REPLACES .52 CUBIC FT.

REPLACED BY ASS'Y

± 1/32 UNLESS OTHERWISE SPECIFIED. SCALE 12" = 1'

STAMP PART NUMBER WHERE SHOWN

PART No.	-4 CASTING	NOTED MATERIAL	NOTED SPEC.
	STOCK		

PARTS LIST PER ASSY.

LH REQ.	RH REQ.	LH REQ.	RH REQ.	LH REQ.	RH REQ.	LH REQ.	RH REQ.	LH REQ.	RH REQ.
-0		-2		-3		-4		-5	

A.C. NOTED	6AC1132-001	T.L. CHECK 7/8/80	VAN [illegible] Kirk A.F. [illegible]
NAVY		DRAFT	Checker / STRUCT / MAT / APPROV / ENGR.
HEAT TREAT	FINISH		

NAME CASTING-ARMT-SIGNAL PISTOL SUPPORT BRACKET

CONSOLIDATED AIRCRAFT CORP. San Diego, Calif.

OPP. HAND —

SIZE D

32F3553

R

DASH NO.	A (DIA-HEX)	B	C	D (DIA.)	E THD CLASS 3 & P.D.	F	G	H (DIA.)	J	Ⓐ Π (DRILL)	L	M (DIA.)	N (DIA.)	Ⓐ Δ (DRILL)	θ°	WT. (LB)
-4	11/16	17/32	1/8	.362	7/16-20 .4050 +.0000 -.0026	1/4	1 5/16	.435	29/32	3/16	9/16	11/32	.172	11/64	35	.07
-6	13/16	9/16	9/64	.469	9/16-20 .5300 +.0000 -.0030	1/4	1 15/32	.560	1	1/4	19/32	15/32	.297	19/64	25	.11
-8	1	19/32	5/32	.618	3/4-18 .7139 +.0000 -.0030	1/4	1 3/4	.748	1 5/32	5/16	21/32	5/8	.391	25/64	30	.28
-10	1 1/8	5/8	3/16	.743	7/8-18 .8389 +.0000 -.0036	5/16	2 5/32	.873	1 7/16	3/8	13/16	3/4	.484	31/64	30	.34
-12	1 7/16	13/16	7/32	.909	1 1/16-14 1.0161 +.0000 -.0040	3/8	2 11/32	1.060	1 19/32	7/16	21/32	15/16	.609	39/64	30	.22
-16	1 11/16	13/16	7/32	1.150	1 5/16-14 1.2661 +.0000 -.0040	3/8	2 7/8	1.310	1 7/8	9/16	15/16	1 5/32	.844	27/32	30	.30

LET	ALTERATION	DATE	BY
	CODE "H" WAS K) CODE Δ WAS B)		
	IN DIM. BLOCK @ ON DRWG.	4-23-41	MATTS
B	FOR -4,-6,-8,-10 CH. MOLY.		
	SPEC. 57-107-19 WAS -4-6-8-10		
	NI. STEEL (9330) ST 90-110		
	-16 AL. ALLOY - SPEC. 17ST OR		
	SPEC. QQA354 - COND. T WAS		
	-16 AL. ALLOY - SPEC. 17ST OR		
	SPEC. QQ-A-3547, ST-153 GR. 1,		
	QQ-A-351-T	1-23-41	DIETEL
C	ADDED -12 DIM'N	4-28-41	
D	REMD DIM. 1/16 & NOTE "THD.---		
	--HERE" ADDED NOTE "MAX.---		
	THDS." NO WT. CHG.	6-17-41	REME

Ⓓ MAXIMUM TWO IMPERFECT THREADS

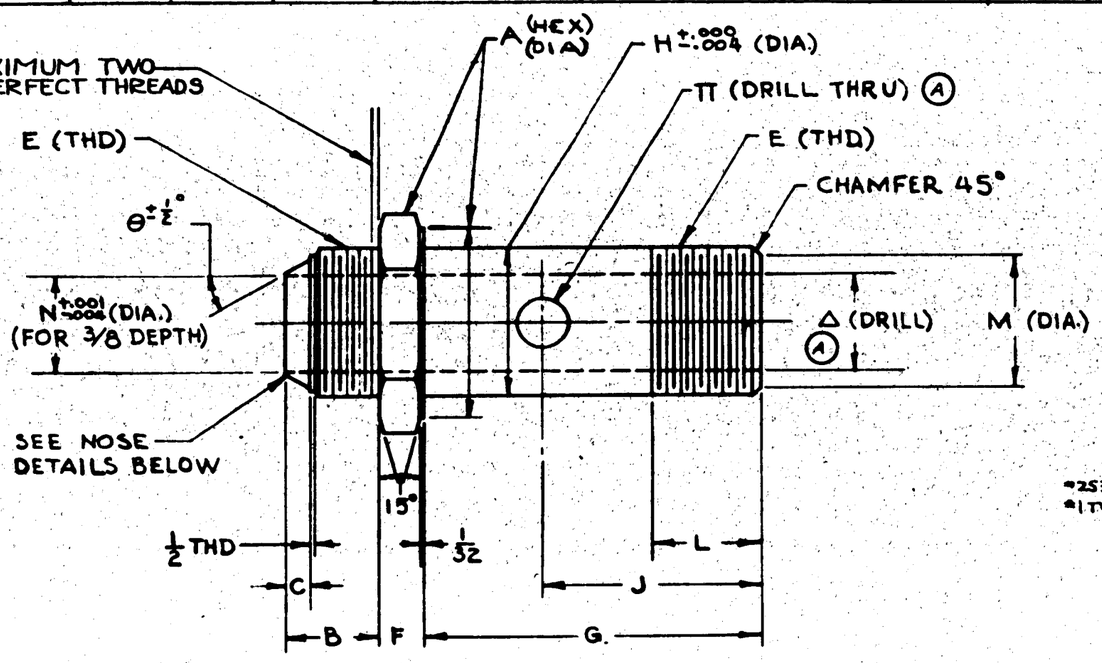

NOTE
"D" MUST BE CONCENTRIC WITH "N" WITHIN .003

DASH NO.	MODEL	NEXT ASSY	QTY
-10	B24E	32F5648	1
-10	B24C	32F503	1
-10	B24D	32F6648	1
-10	B24D	32F5648	1
-8	B24D&E	32F5719	2
-8	B24D&E	32F8648	1
-8	PBY-5A	28F6702	1
-8	28-5AMC	28F6702	1
-10	B24D&E	32F5719	2
-8	28-5AMN	28F6702	1
-8	B24D&E	32B1795	2
-8	B24D91-50	32F5642	1
-8	B24D&E	32F5507	2
-8	B24D&E	32F5504	1
-10	LB30	32F5503	2
-8	LB30*52-ON	32F5503	3
-8	LB30*2-51	32F5503	4
-8	LB30	32F5507	2
-8	LB30	32F5504	1
-8	28-5AMC	28F6500	1
-8	28-5AMN	28F6500	1
-8	PBY-5A	28F6707	1

*253 & ON
*1 TO 82

REQUIREMENTS PER AIRPLANE

REPLACES
REPLACED BY
NOTED CALC WT.
ACT WT.

LIMIT ON MACHINING WHERE OTHERWISE SPECIFIED ±.010, ½°
SCALE NONE
STAMP PART NUMBER WHERE SHOWN

PART NO.	STOCK	MATERIAL	SPEC.	LH REQ.	RH REQ.	LH REQ.	RH REQ.	LH REQ.	RH REQ.	LH REQ.	RH REQ.	LH REQ.	RH REQ.
PARTS LIST PER ASSY.				-0		-2		-3		-4		-5	
-16	1" HEX. K 4 3/4												
-12	1 1/16 HEX. K 3 7/8	AL. ALLOY	17ST	QQA354-T									
-10	1 1/8 HEX. K 3 3/8												
-8	1 HEX. K 2 7/8	CH. MOLY.	57-107-19										
-6	13/16 HEX. K 2 1/2												
-4	11/16 HEX. K 2 3/8												

AC	C.A.C. ZF-32-001	REVISED		
NAVY		10-1-40	11-12-40	
HEAT TREAT	FINISH	QUALITY	CHECK	STRUCT. MAT APPROV ENG

NAME BOLTS - TUBE CONNECT & SWIVEL - HYDRAULIC SYSTEM
CONSOLIDATED AIRCRAFT CORP. SAN DIEGO, CALIF.
OPP. HAND
DWG. D
32F5565

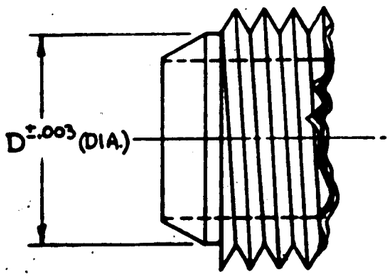

-4 NOSE DETAIL

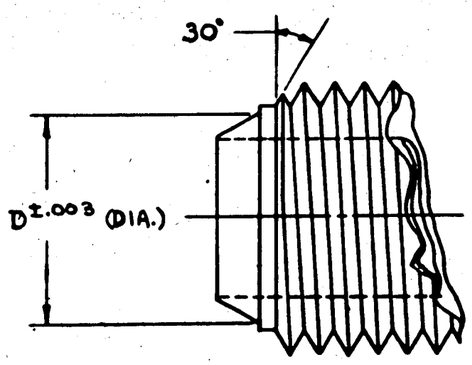

-6, -8, -10, 12 & -16 NOSE DETAIL

S.K.

5-24-41

LET	ALTERATION	DATE	BY
A	COUNTERBORE #6-40 (2) TO ACCESS SCREW HEADS FOR FITTING CLEARANCE.		
B	CHANGE #7/16-20 PORTS (2) TO BE IN ACCORDANCE WITH SPEC. AND 10050	7-20-42	GERWIN

#6-40 NF-3 THD - CSINK 82°X.138 DIA.
DRILL 1/16 DIA. - 1 1/8 DEEP - TO INTERSECT OTHER 1/16 HOLE AS SHOWN.

7/16-20 NF-3 THD.
CSINK 82°X.437 DIA.

3/4-16 NF-3 THD.
CSINK 82°X.750 DIA.

Ⓑ 7/16-20 NF-3 THD.
(PORT TO BE IN ACCORDANCE WITH SPEC. AND 10050)
1/16 DR. - 2 3/8 DEEP AS SHOWN

1/16 DRILL TO INTERSECT AS SHOWN

CHAMFER 45°X.028 DEEP

Ⓐ 2 HOLES COUNTERBORE 13/32 DIA.

UNDERCUT 1/64 WIDE X.005 DEEP-2 PLACES

9/64 DRILL (140) (TO THIS DIM.)

#10 DRILL (.193) THRU-1 HOLE

SECTION A-A

#6-40 NF-3 THD. - CSINK 82°X.138 DIA. - DRILL 1/16 DIA. 2 1/16 DEEP & 2 3/16 DEEP TO INTERSECT OTHER 1/16 DIA DR. AS SHOWN - 2 HOLES.

3/4-16 NF-3 THD.
CSINK 82°X.750 DIA.

1/16 MAX. R.

1/16 MAX. R.

SECTION B-B

7/32 DRILL (.218) THRU - 2 HOLES

#6-40 NF-3 THD - CSINK 82°X.138 DIA. - 11 HOLES.

SIDE VIEW

Ⓑ 7/16-20 NF-3 THD-THRU
(PORT TO BE IN ACCORDANCE WITH SPEC. AND -10050)

FINISH-ANODIZE

PURCHASE TO DWG. NO. 5735.

ASSY. DASH NO.	MODEL	NEXT ASSY.	REQ.
	XPB2Y-4	32F5735	1
	PB2Y-5B	32F5735	1
	PB4Y-5	32F5735	1
	PB2Y-3	32F5735	1
	BR1083-252	32F5735	1

REQUIREMENTS PER AIRPLANE

REPLACES — GALS. WT. 1.1

REPLACED BY — ASY. WT.

SCALE 12"=1'-0"

STAMP PART NUMBER WHERE SHOWN

PART NO.	STOCK	MATERIAL	SPEC.	(NAVY SPEC) (ARMY SPEC)									
				LH REQ.	RH REQ.	LH REQ.	RH REQ.	LH REQ.	RH REQ.	LH REQ.	RH REQ.	LH REQ.	RH REQ.
PARTS LIST PER ASSY.	1 1/4 x 3 11/16 x 3 3/4	AL. ALLOY 2951	46F9 COND. T	AL. ALLOY 2951	46F9 COND. T					-0	-2	-3	-4	-5

AC NONE	2	ROGERS 10-10-41
NAVY		
HEAT TREAT	FINISH	DRAFT

CHECK	STRUCT	MAT	ENGR.	STD.
SAVILLE 11-3-41	KIRK	J.F.R.	KLEIN A.R. OWEN	LIVERS E. ANDREW

NAME HOUSING - SUMP PUMP - HYDRAULIC SYSTEM

CONSOLIDATED AIRCRAFT CORP. SAN DIEGO, CALIF.

OPP. HAND

DWG. NO. D 32F5736

3. 63 INDICATES SMOOTH MACH. FINISH - 32 INDICATES POLISHED SURFACE.
2. ALL DIAMETERS MARKED THUS (Ø) TO BE CONCENTRIC WITHIN .002
1. ALL UNSPECIFIED RADII .010 MAX. R.

NOTES: BREAK ALL CORNERS .010 R.

R C.A.C. GOODYEAR

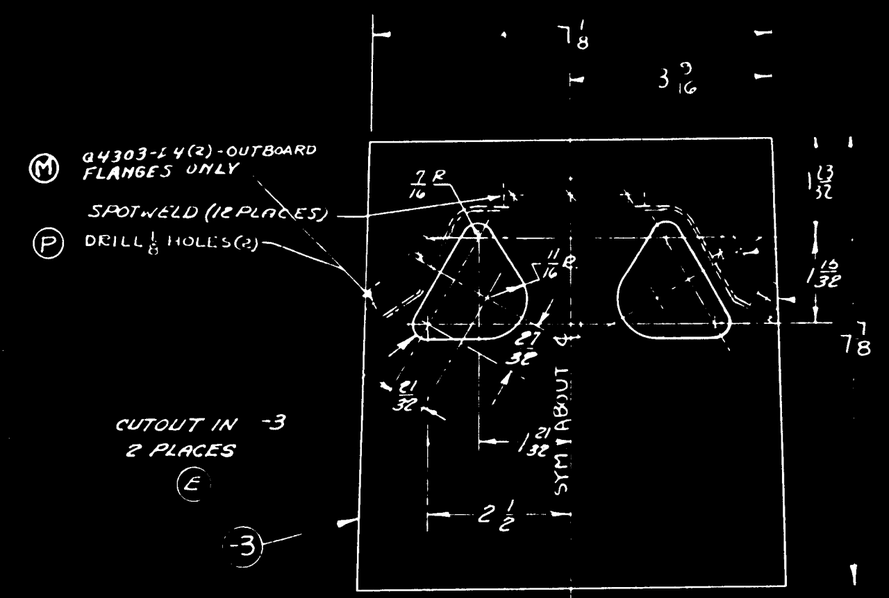

FLANGE TOP OF PLATE (-2) SAME AS SHOWN IN SECTION A-A CUT THIS FLANGE FLUSH

METHOD OF PAINTING NUMBERS ON PLATE 12" = 1'-0"

LET	ALTERATION	DATE	BY
D	TRACED	4-17-37	V.I.B
E	ADDED CUTOUTS IN -3. REMOVED "DRILL 7/8 8 HOLES". ADDED "DRILL 7/8 - 4 HOLES" AT SECT. A-A. AN931-10-14 WAS 8 REQ'D. NOW 4.	3-31-38	KEATING
F	CHANGED NEXT ASSEM. Nº FOR PBY-3 & PBY-4 WAS 28G006	3-31-38	KEATING
G	SCALES REVISED & Y SCALE ADDED	11-28-40	NEWKIRK
H	REPLACED IMPERIAL SCALE WITH U.S. REMOVED Z SCALE (CANCELLATION)	3-9-41	DANIELS
J	CHGD FIGS TO DOUBLE ROW. ADDED "INTEGRAL FUEL TANK" & REQTS FOR PBY-5-5A; 08-10; 28-5'S.	7-3-41	DANIELS
K	3/16 HIGH LETTERS WAS 1/8 HIGH	7-10-41	DANIELS
L	CHGD -2 MAT FROM 24ST TO 24S	8-24-42	WILKERSON
M	ADDED Q4303D4 9 RIVETS (NO CHG TO NEG)	6-9-42	SEYMOUR
N	REVISED REQ/AIRPLANE #		
	ADDED NOTE: "STENCIL ... SEE 28G5509" (NO WT. CHG.)	6-9-42	SEYMOUR
P	CHGD SPEC & MAT'L FOR -3 & -4 FROM AL-AL SHT 4 TO AL-CLAD SHT 4 AND T TO T3 FOR -2 FROM AL-AL SHT 4 TO AL-CLAD SHT 4 AND T REMOVED AN442 AND AN525 RIVETS. SPOTWELD (12) ALL G WELDS	7-28-42	WALKER

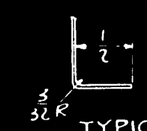

TYPICAL FLANGE 12" = 1'-0"

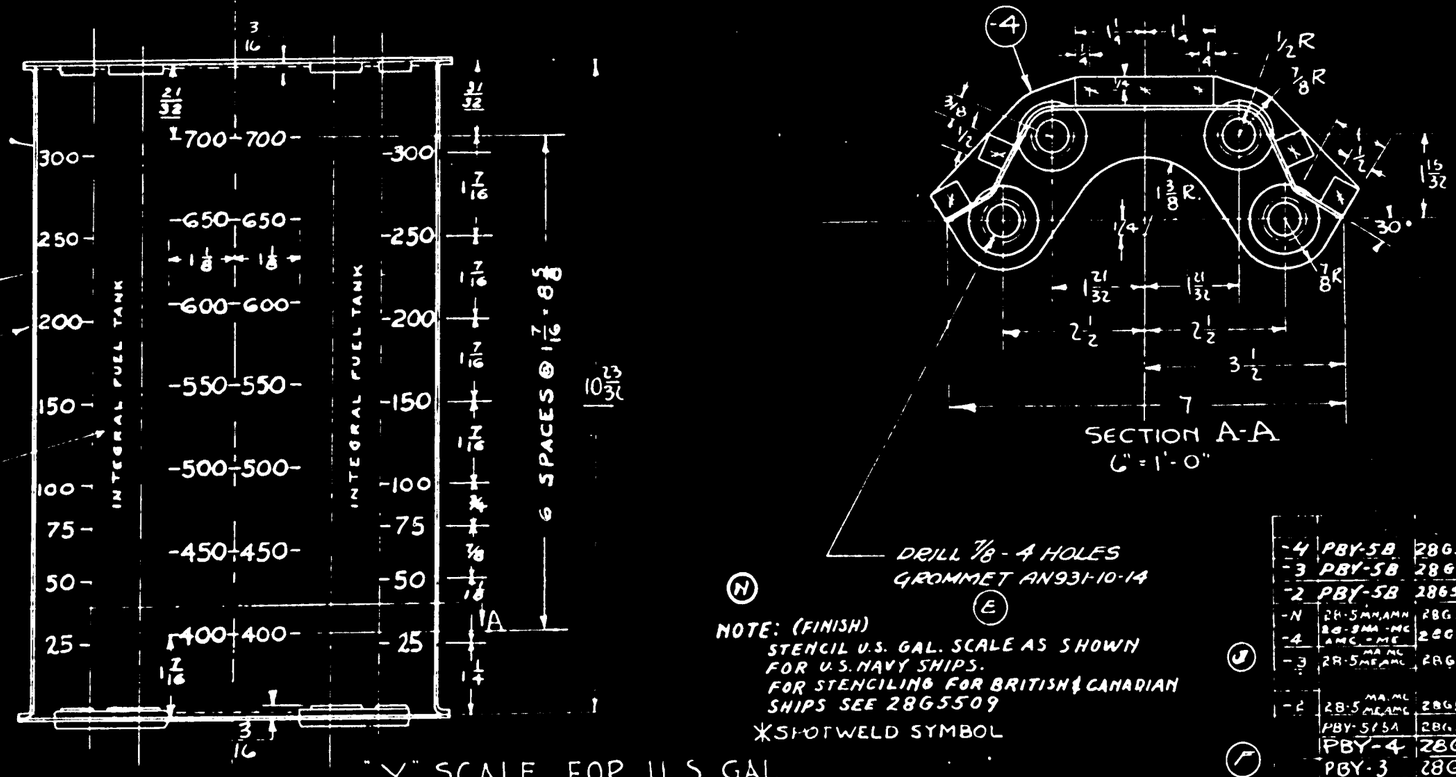

FINISH THIS SURFACE OF PLATE WHITE. NUMBERS TO BE BLACK SEE DETAIL FOR SIZE

Ⓙ BLACK LETTERS 3/16 (K) HIGH

"Y" SCALE FOR U.S. GAL.

Ⓝ Ⓙ

NOTES:-

FOR -3 & -4 — MAT'L. - .020 ALCLAD SH'T. (24ST) SPEC 47A8 COND. T

H.T. NONE — FINISH Z-P-MAY

Ⓟ Ⓛ -2 MAT'L - .020 ALCLAD SH'T (24ST) SPEC. 47A8 COND T SEE NOTE FOR FINISH ON -2

ALL BEND RADII 3/32 UNLESS NOTED OTHERWISE

SECTION A-A 6" = 1'-0"

DRILL 7/8 - 4 HOLES GROMMET AN931-10-14 Ⓔ

Ⓝ NOTE: (FINISH) STENCIL U.S. GAL. SCALE AS SHOWN FOR U.S. NAVY SHIPS. FOR STENCILING FOR BRITISH & CANADIAN SHIPS SEE 28G5509

*SHOTWELD SYMBOL

FINISH	
Z	ANODIC TR.
P	P-27 PRIMER
AP	ALUMINIZED PRIMER
C	CADMIUM PLATE

-4	PBY-5A	28G5509	1			
-3	PBY-5A	28G5509	1			
-2	PBY-5A	28G5509	1			
-N	28-5 MA. ML AMC	28G3002	1 EA			
-4	28-5 MA. ML AMC	28G5509	1 EA			
-3	28-5 MA. ML AMC	28G5509	1 EA			
-2	28-5 MA. ML AMC	28G5509	1 EA			
	PBY-5/5A	28G3002	1 EA			
	PBY-4	28G3002				
	PBY-3	28G3002				
	PBY-2	28G3002	Q4303D4	2	-4	1
	PBY-1	28G3002	AN931-10-14	4	-3	1
	XPBY-1	28G006			28G038-2	1

O.H.	MODEL	NEXT ASSY.	REQ.	STD PARTS REQUIREMENTS PER AIRPLANE	MAT.	H RH REQ.	PART NO.	LH REQ.

PARTS LIST PER ASSY.

EPR Fenwick KLUGMAN 1-28-35 5-20-37 1-30-35

SPEC.	HEAT TREAT	FINISH	DRAFT	CHECK	EXAM	ENG.
NOTED	NOTED	NOTED				

REPLACES 28G038 OF 7-11-34

REPLACED BY

LIMIT ON DIMENSIONS UNLESS OTHERWISE SPECIFIED

APPROVED AG 4-17-37 DATE

SCALE 6" = 1'-0" & NOTED

AG

NAVY NOTED

MATERIAL

CONSOLIDATED AIRCRAFT CORP. BUFFALO, N.Y.

STAMP PT. No. WHERE SHOWN

NAME SCALE ASSEM - POWER PLANT - FUEL SIGHTGAGE - REAR

OPP HAND

DWG. SIZE D 28G038

SUPPLIES & EQUIPMENT CLASSIFICATION			
LET	ALTERATION	DATE	BY
H	TRACED	9-20-37	CLARK
J	REMOVED FLAT PATTERN DWG'S	10-28-37	WILLIAMSON
K	ADDED DIMENSIONS 25/16 & 17/32 AS SHOWN	11-27-40	CLEVENGER
L	ADDED NOTE: "-2-3-4-5 TO BE .064 MAT"	3-12-41	EDMISTON
M	CHGD MATL. FROM 24ST TO 2450	3-19-41	TRACY
	ADDED HEAT TREAT SPEC & NOTE		

E.O. 2700.3
E.O. 29424

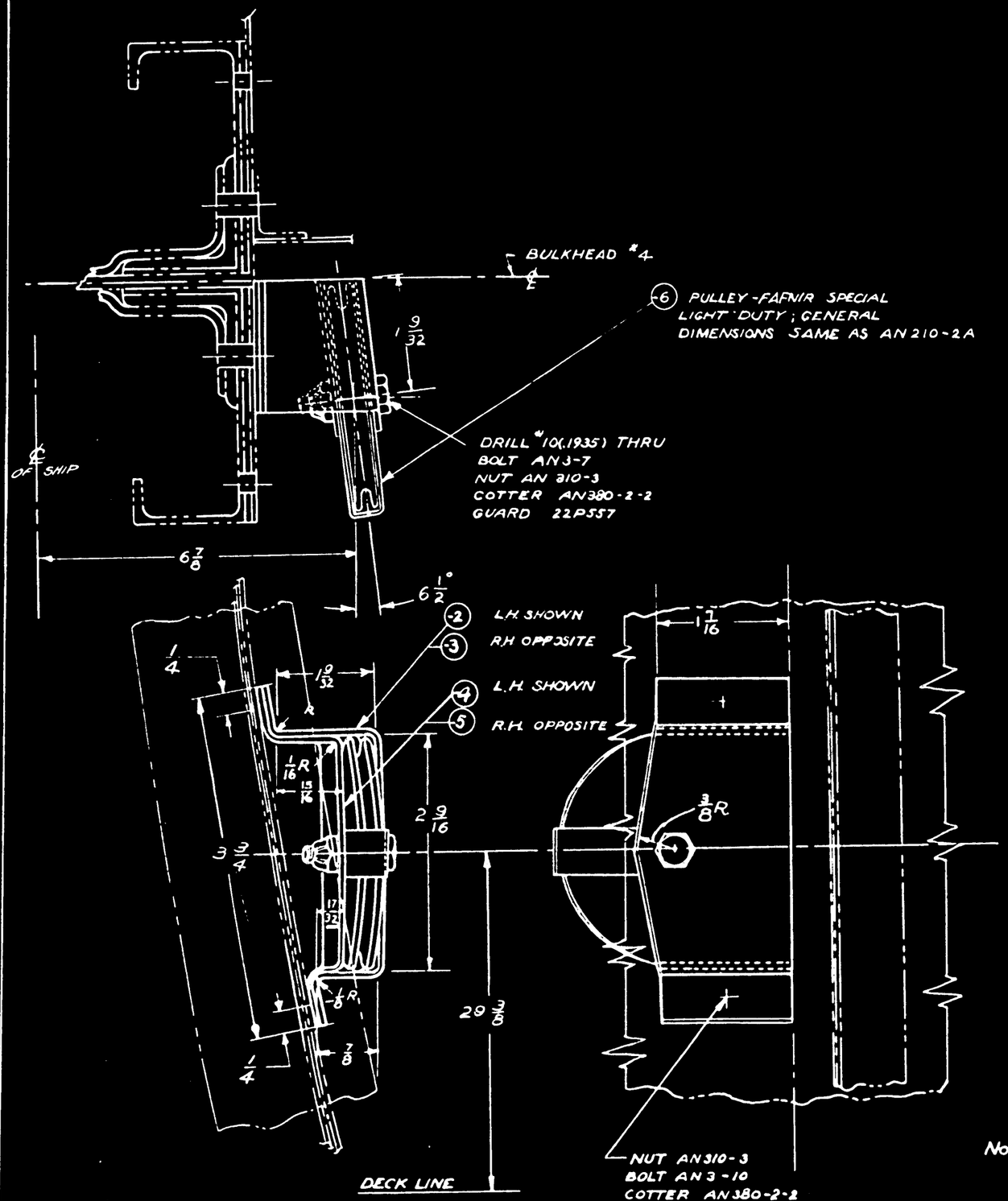

NOTE: -2, -3, -4, & -5 TO BE .064 MAT. HEAT TREAT AFTER FORMING.

28G069 LH SHOWN
28G069-1 R.H. OPPOSITE

ALL AL. ALLOY SHEET 2490 SPEC. 47A10 (CONDITION A) ALLOY 24A EXCEPT AS NOTED (M)
ALL AL. ALLOY EXTRUSIONS SPEC. (CONDITION T) ALLOY 24T EXCEPT AS NOTED
HEAT TREAT ALL CONDITION A MATERIAL PER SPEC. SR53
RIVETS AL. ALLOY EXCEPT AS NOTED

FINISH Z-P-2 GP

GP - GREEN PRIME

FINISH CODE	
Z	ANODIC TREATMENT
P	P-37 PRIMER
AP	ALUMINIZED PRIMER
C	CADMIUM PLATE

-1	28-5 NAC	28G1001-1								
	28-6 NAC	28G1010								
-1	28-5 NC	28G1001-1								
	28-5 NC	28G1010								
-1	PBY-5A	28G1001-1								
	PBY-5A	28G1010								
-1	PBY-5	28G1001-1								
	PBY-5	28G1010								
-1	PBY-4	28G1001-1								
	PBY-4	28G1010								
-1	PBY-3	28G1001-1						22P557	1	1
	PBY-3	28G1010						-6	1	1
-1	PBY-2	28G1001-1	AN 3-10	2	2			-5		1
	PBY-2	28G1010	AN 380-2-2	3	3			-4	1	
-1	PBY-1	28G1001-1	AN 310-3	3	3			-3		1
	PBY-1	28G1010	AN 3-7	1	1			28G069-2	1	
O.H	MODEL	NEXT ASSY	REQ	ST'D PARTS	LH REQ.	RH REQ.		PART NO.	LH REQ.	RH REQ.

REPLACES		K CW 4-20-37 APPROVED DATE	REQUIREMENTS PER AIRPLANE
REPLACED BY		179 CALC WT. ACT. WT.	
LIMIT ON DIMENSIONS UNLESS OTHERWISE SPECIFIED ±		SCALE 12" = 1'-0"	
		AC	
		NAVY NOTED MATERIAL	NOTED SPEC. / SR 53 HEAT TREAT / NOTED FINISH

PARTS LIST PER ASSY.

STANDARDS	TOOL	INTERCHG	
5-23-37	5-17-37	7-6-37	
DRAFT	CHECK	EXAM	ENG.

CONSOLIDATED AIRCRAFT CORP. BUFFALO, N.Y.
STAMP PT. NO. WHERE SHOWN

NAME BRACKET ASSEM. FUEL SYSTEM DUMP VALVE - LOWER FRONT PULLEY

OPP HAND 28G069-1

DWG. SIZE D | 28G069 | REV. K

690682

ENG. FILE
COPY NO. 1

SUPPLIES & EQUIPMENT CLASSIFICATION			
LET	ALTERATION	DATE	BY
D	TRACED	9-17-37	W.M.
E	SPEC. 46AI CL.3 WAS 46AI CL.4	10-18-37	[redacted]
F	NOTE ADDED.	"	"
G	ADDED 180° ANGLE TO C'SINK	10-28-37	[redacted]
H	NOTE ADDED	11-4-37	[redacted]
I	5/8 WAS 3/32 & 1/4 R. WAS 1/8 R. ADDED SECTION C-C	12-27-37	[redacted]
J	PBZY-2 REQ'S ADDED	11-5-43	[redacted]
K	IN B/M, REPLACED "AL ALLOY CASTG", SPEC. 46AI CL.3 & NT "NAF5A6A" WITH "NOTED". ADDED NOTE #2. NO WK CHG	7-18-46	[redacted]

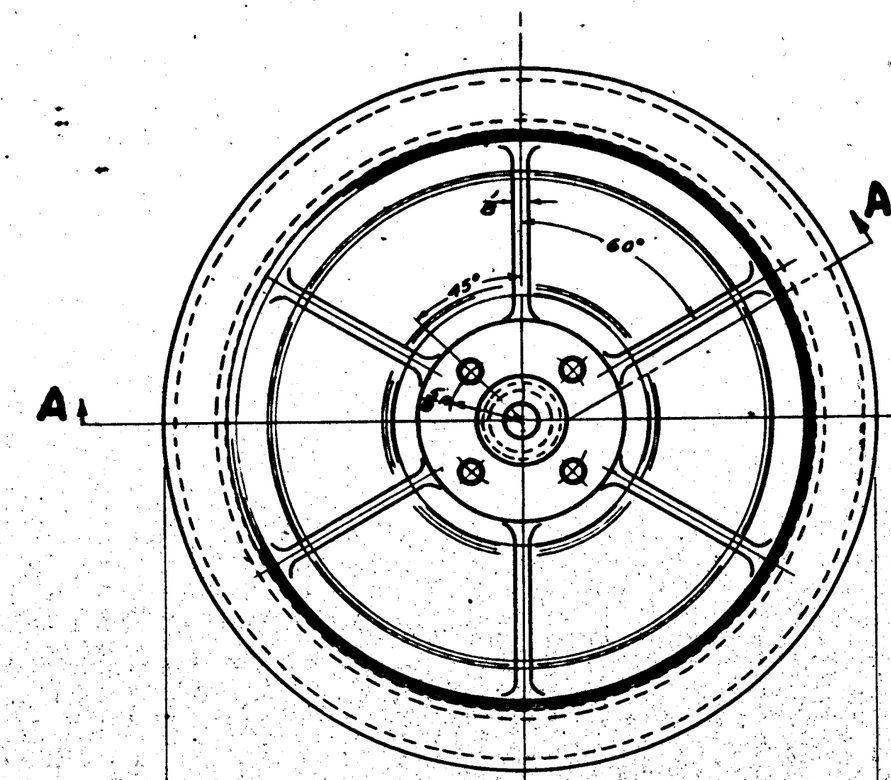

6 1/8 DIA.
MACHINE IF NECESSARY TO OBTAIN THIS DIMENSION

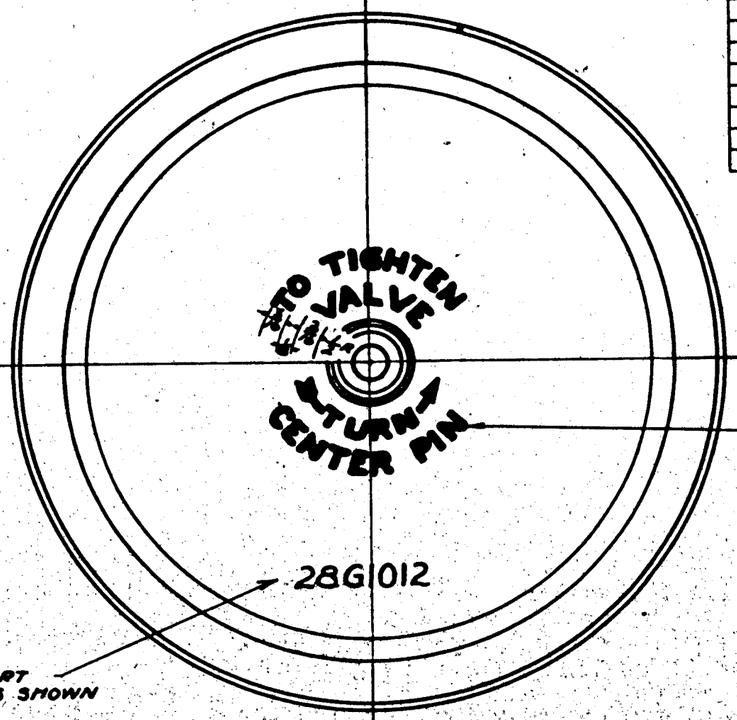

RAISED LETTERS ON CASTING TO BE PAINTED BLACK

28G1012

STAMP PART NUMBER AS SHOWN

VIEW B-B
SHOWING LETTERING AND METHOD OF FINISHING BOTTOM SURFACE

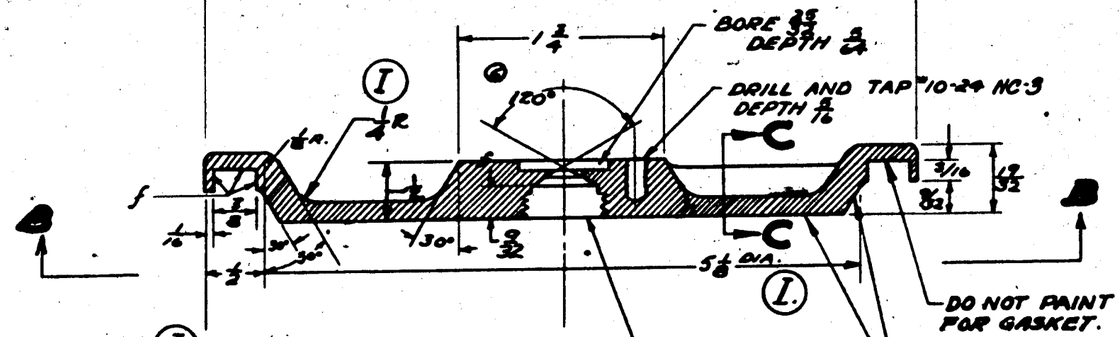

SECTION A-A

DRILL 1/4 THRU
DRILL 1/2 DEPTH 3/32
BORE FOR TAP DEPTH 3/32
TAP 3/4 X 18 U.S.F.

DO NOT PAINT RECESS FOR GASKET.

THESE SURFACES ONLY TO BE PAINTED G.P.

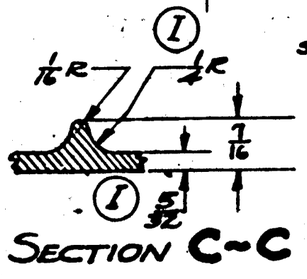

SECTION C-C

C'STG. LIMITS ± 1/32
LIMITS TO FINISHED SURFACES ± .010

ALL UNSPECIFIED RADII TO BE 1/16
f = MACHINE FINISH
CASTING SHALL BE SMOOTH FREE FROM FINS AND SPRUES

NOTES–

1.–THIS CASTING WILL BE IN CONTACT WITH FUEL & MUST BE LEAK PROOF UNDER TEST AIR PRESSURE OF 4 #/□" FOR 30 MIN. (F)

(K) 2.–MATERIAL MAY BE–
(A.) 356 T6 AL. AL. CASTING, SPEC. AN-QQ-A-354, T.S. 30,000 P.S.I., OR
(B.) 195 T6 AL. AL. CASTING, SPEC. AN-A-8 CL. II, T.S. 32,000 P.S.I.

	28-SAMC	28G1011	2								
	28-SMC	28G1011	2								
	PBY-5	28G1011	2								
	PBY-5A	28G1011	2								
	PB2Y-3	28G1011	2								
	PB2Y-2	28G1011	2								
	PBY-4	28G1011									
	XPB2Y-1	28G1011									
	PBY-3	28G1011									
	PBY-2	28G1011									
	XPBY-1	28G1011									
	PBY-1	28G1011									
O.H.	MODEL	NEXT ASSY.	REQ.	ST'D PARTS	LH REQ.	RH REQ.	PART NO.		LH REQ.	RH REQ.	

REPLACES	APPROVED	11-17-37 DATE						
REPLACED BY	-66 CALC. WT.	ACT. WT.						
LIMIT ON DIMENSIONS UNLESS OTHERWISE SPECIFIED ± NOTED	SCALE 12"=1'-0"		REQUIREMENTS PER AIRPLANE		MAT.	PARTS LIST PER ASSY.		
	AC		(E)					
	NAVY NOTED		NOTED	NOTED	Z-P & AS NOTED	DRAWN 10-11		
	MATERIAL		SPEC.	HEAT TREAT	FINISH	DRAFT	CHECK	EXAM.
	CONSOLIDATED AIRCRAFT CORP. BUFFALO, N. Y.		NAME COVER-P.P.-FUEL SYSTEM DUMP VALVE			OPP. HAND		
	STAMP PT. No. WHERE SHOWN					SIZE D	28G1012	

SULLIVAN-GUTERMAN CO., INC. BUFFALO
IMPERIAL TRACING CLOTH

SUPPLIES & EQUIPMENT CLASSIFICATION			
LET	ALTERATION	DATE	BY
G	TRACED . NO WT. CHG.	10-12-43	[illegible]

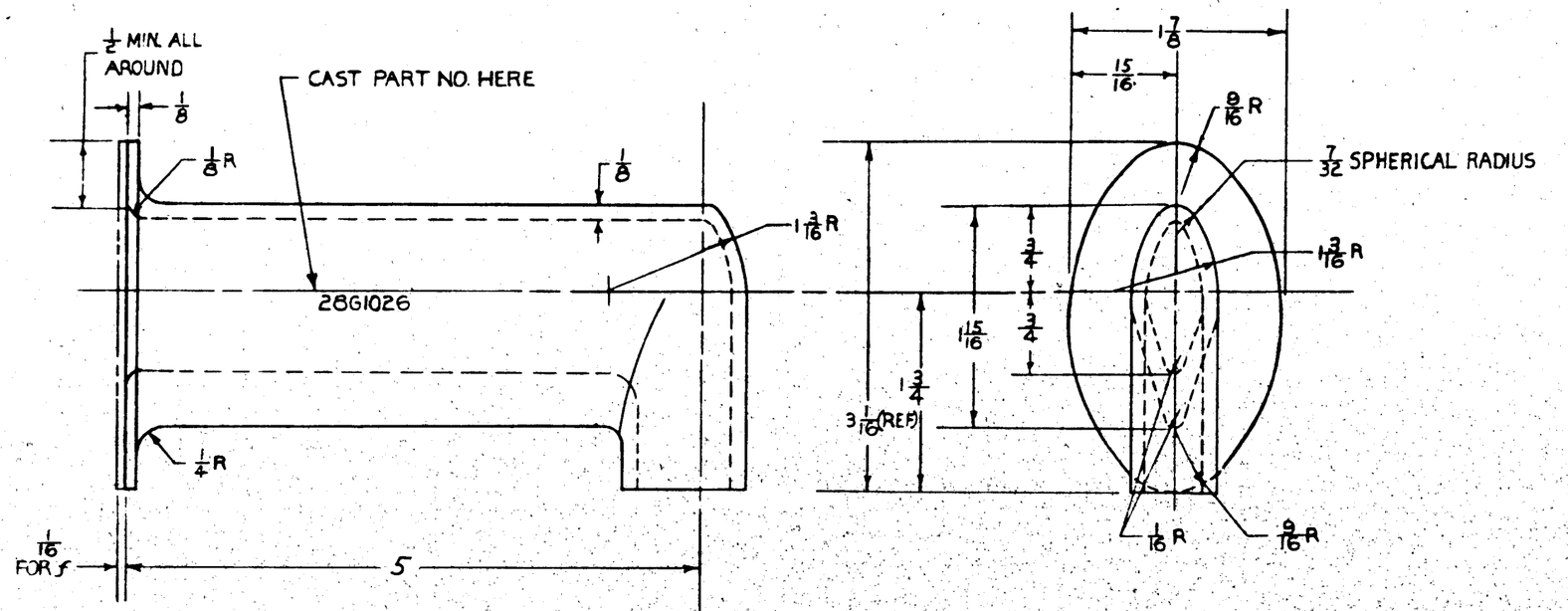

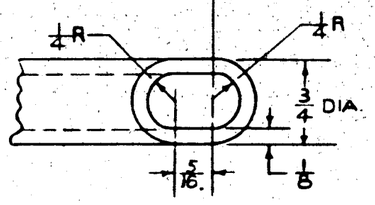

NOTE: MATERIAL MAY BE:
1. AL ALLOY CASTING 195T4,
SPEC AN-QQ-A-390 CL. I, TS 29,000 PSI.,
2. AL ALLOY CASTING S195T6,
SPEC. AN-A-5 CL II, TS. 32,000 PSI.

FINISH: ANODIZE P27 PRIMER ALL OVER
2 YELLOW ENAMEL EXTERNALLY

FINISH CODE	
Z	ANODIC TREATMENT
P	P-27 PRIMER
GP	GREEN PRIMER
C	CADMIUM PLATE

	MODEL	NEXT ASS'Y	REQ.
	PBY-5A	28G3010	2
	PBY-5	28G3010	2
	PBY-4	28G3010	2
	PBY-3	28G3010	2
	PBY-2	28G1025	2
	PBY-1	28G1026	2
	28-5MC	28G3010	4
	PBY-5B	28G3010	2
	28-5MA	28G3010	4
	28-5ME	28G3010	4
	28-5AMC	28G3010	4
	28-5AMN	28G3010	4
	28-5MN	28G3010	4

REQUIREMENTS PER AIRPLANE

REPLACES 2861026 2-8-37 | .28 CALC WT.
REPLACED BY | ACT WT.
UNLESS OTHERWISE SPECIFIED ± 1/32 | SCALE 12" = 1'0"
STAMP PART NUMBER WHERE SHOWN

PART NO.	NOTED STOCK	NOTED MATERIAL	NOTED SPEC.	LH REQ.	RH REQ.	LH REQ.	RH REQ.	LH REQ.	RH REQ.	LH REQ.	RH REQ.	LH REQ.	RH REQ.	ZONE
PARTS LIST FOR ASSY				-0		-2		-3		-4		-5		

	A.C.		ADAMS	ANDERSON	MILLER		L.C.W.	
NAVY	NOTED	NOTED	12-3-35	12-9-37			12-11-35	
	HEAT TREAT	FINISH	DRAFT	CHECK	STRUCT.	MAT.	APPROV.	ENG.

NAME VENT-FUEL TANK-MANH. COVER
CONSOLIDATED AIRCRAFT CORP. SAN DIEGO, CALIF.
OPP. HAND | SIZE D | 28G1026

R 9701982

DIM.	PBY-1	PBY-2	PBY-3	COMM. NO. 2	PBY-4	PBY-5	PBY-5A
A	18 3/16	18 3/16	18 3/16	18 3/16	18 3/16	18 3/16	18 3/16
B	18 1/16	13 1/2	13 1/2	13 1/2	13 1/2	13 1/2	13 1/2
C	98	98	98	98	98	98	98
D	51 9/16	51 9/16	51 9/16	51 9/16	51 9/16	52 1/16 (K)	52 1/16 (N)

(H)

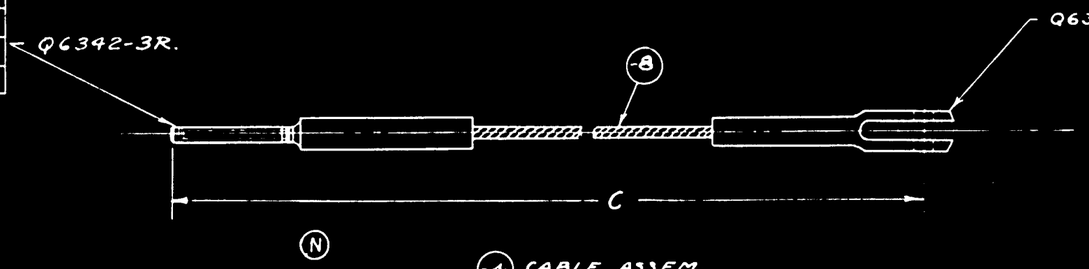

(-4) CABLE ASSEM. DUMP VALVE TO FRONT SPAR

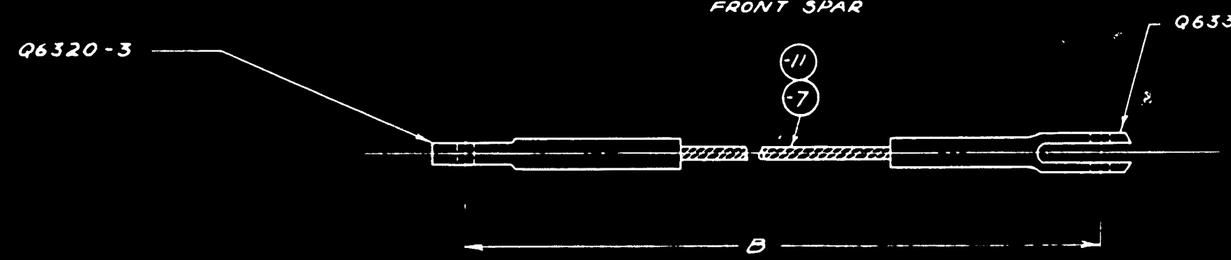

(-3) CABLE ASSEM. (-10) (SPRING)

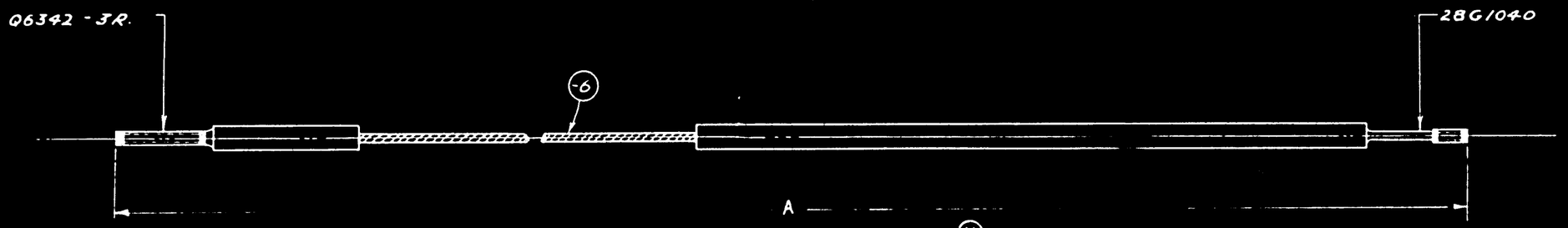

(-2) CABLE ASSEM. FRONT SPAR TO TURNBUCKLE IN SUPER-STRUCTURE

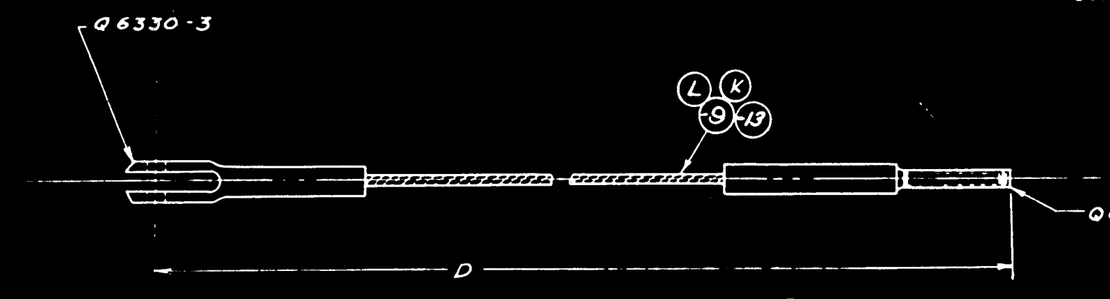

(K) (L) (-12) (-5) CABLE ASSEM. TURNBUCKLE-TO OPERATING LEVER

NOTE:
SEE DRAWING "Q6342 FOR SWAGING OPERATION ON TERMINALS. 4 N SPEC. T-46
ALL CABLE 3/32 DIA. 7×7 FLEX. - SPEC. 22C2.
FINISH - [redacted] ON -2 & -5, NO FINISH ON -3 & -4
PROOF LOAD TO 442 LBS.
(J) (M) (H)

FINISH = PARALKATONE

	CALC. WT.	ACT. WT.
-2	76	
-3	93	
-4	78	
-5	72	
-10	69	

SUPPLIES & EQUIPMENT CLASSIFICATION

LET	ALTERATION	DATE	BY
G	TRACED	4/15/37	H.W.
H	PROOF LOAD WAS 550 LB. PBY-4 REQ. ADDED	2/6/38	FULLER " "
J	PROOF LOAD WAS 442 #	7-13-40	BOOST WICK
K	REPLACE -5 ASSEM. WITH -12 ASSEM.	11-4-40	BOOST WICK
K	" -9 WITH -13	11-4-40	BOOST WICK
K	ADD PBY-5 ASSEM.	11-4-40	BOOST WICK
L	REPLACED -5 ASS'Y REMOVED BY INCORRECT INCORP. OF E.O. 27845	6-11-41	LEWIN
M	PROOFLOAD TO 442 # WAS 250 # NO WT. CHG.	6-9-42	EME
N	18 3/16 WAS 16, 98 WAS 96 7/16, 51 9/16 WAS 50 7/16, 52 1/16 WAS 50 15/16, ADDED DIMS FOR PBY-5A. NO. WT. CHG.	6-21-43	HENDERSON

CQ 6983
E.O. 27845
PBY-1,2,3,4 E.O. A 8492
E.O. H41087

INCORPORATES
PBY-1 BUREAU CHANGE # 110

(L)

			Q6330-3	1
			Q6342-3L	1
			28G1031-3	1
PARTS ASSEMBLED ON 28G1031-3				
			Q6320-3	1
			Q6330-3	1
			28G1031-11	1
PARTS ASSEMBLED ON 28G1031-10				
			Q6330-3	1
			Q6342-3L	1
			28G1031-13	1
PARTS ASSEMBLED ON 28G1031-12				
			Q6342-3R	1
			Q6330-3	1
			28G1031-8	1
PARTS AS ASSEMBLED ON 28G1031-9				
			Q6320-3	1
			Q6330-3	1
			28G1031-7	1
PARTS AS ASSEMBLED ON 28G1031-3				
			28G1040	1
			Q6342-3R	1
			28G1031-6	1
PARTS AS ASSEMBLED ON 28G1031-2				

-12	28-5MC & AMC	28G1010		2 EA.	(K) (K)
-10				2 EA.	
-4				2 EA.	
-2	28-5MC & AMC			2 EA.	
-12	PBY-5 & 5A			2 EA.	
-10				2 EA.	
-4				2 EA.	
-2	PBY-5 & 5A	28G1010		2 EA.	
-5	PBY-2				(L) (K)
-4	PBY-3	28G1010			
-10	COMM'L 2				
-2	PBY-4				
-5					(L) (K)
-4	PBY-1	28G1010			
-3					
-2					

DWG. NO.	MODEL	NEXT ASSY.	REQ.	STD PARTS	MAT.	PART NO	LH REQ.	RH REQ.
REQUIREMENTS PER AIRPLANE						PARTS LIST PER ASSY.		

REPLACES
REPLACED BY
LIMIT ON DIMENSIONS UNLESS OTHERWISE SPECIFIED ± 1/64
APPROVED 4-15-37
NOTED (CALC. WT.) (ACT. WT.)
SCALE 12"=1'-0"
AC NAVY NOTED
MATERIAL NOTED NONE NOTED
SPEC. HEAT TREAT FINISH

CONSOLIDATED AIRCRAFT CORP. BUFFALO, N.Y.
STANDARD NO. WHERE SHOWN

BOURQUE & MILLER 12-24-39
DRAFT CHECK ENGR. ENG.

NAME CABLE ASSEM. - FUEL SYSTEM - DUMP VALVE RELEASE

OFF. HAND
DWG. SIZE D
28G1031

SUPPLIES & EQUIPMENT CLASSIFICATION			
LET	ALTERATION	DATE	BY
H	TRACED	4-16-37	H.W.
J	ORIFICE AT -2, REMOVED NOTE "ALUM. ALLOY CASTING, SPEC. 46A1 CL. 4, H.T. 28,000 #/sq.in."; ADDED "MATERIAL"		
	NOTE: NO WT. CHG.	8-26-40	HOOK
K	NOTE: "AN442-D3 C'SK THIS SIDE" WAS "AC426-D3 THIS FACE FLUSH." NEG. WT. CHG.	9-30-42	BONTZ

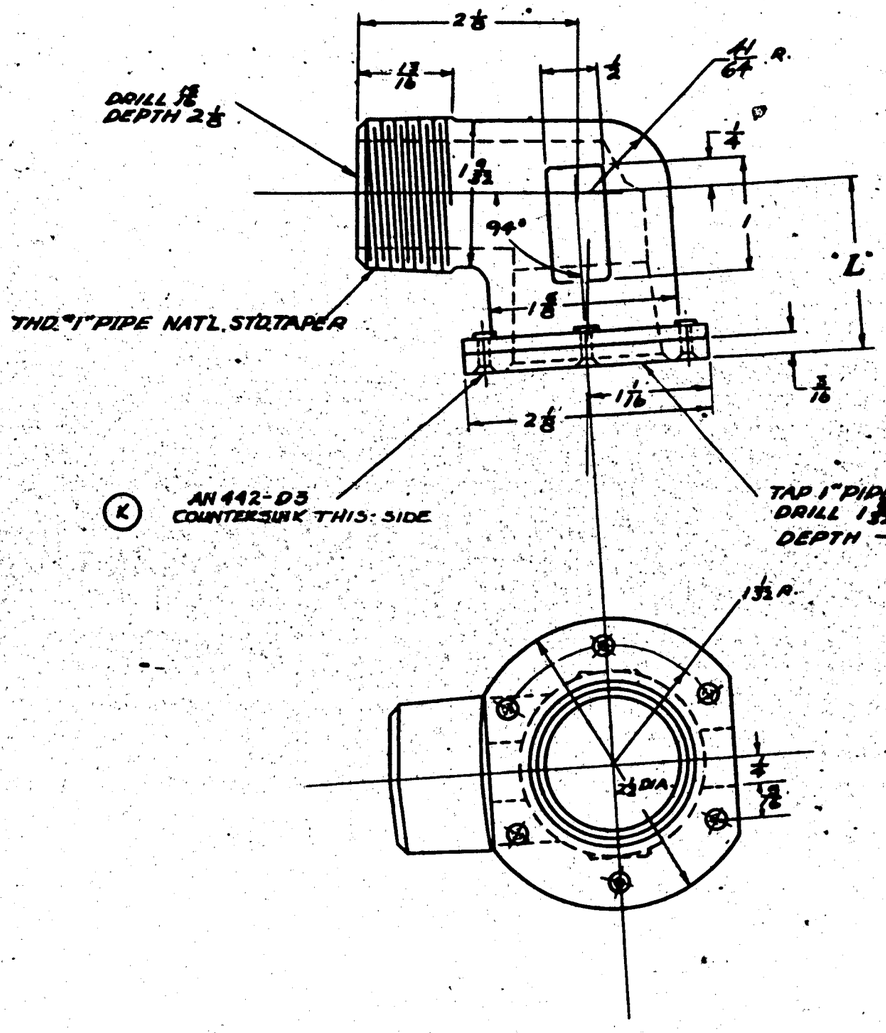

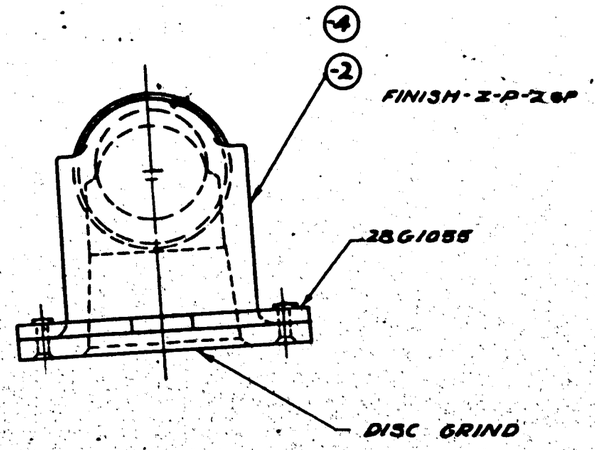

PART NO.	"L"
28G1041-2	1 1/2
28G1041-4	2 5/8

(J)

MATERIAL NOTE:

-2 & -4 MAY BE MADE FROM:

1. AL. ALLOY CASTING 195T4, SPEC. AN-QQ-A-590 CL. I, T.S. 28,000 P.S.I., OR
2. AL. ALLOY CASTING 5195T6, SPEC. AN-A-5 CL. II, T.S. 32,000 P.S.I.

GP-GREEN PRIME

-5	28-5AW, 4AW	2865012	2 EA.							
-5	28-5AW-AC	2865012	2EA.							
-5	28-5AW, 4AC	2865012	2EA.							
-5	PBY-5	2865012	2							
-5	PBY-5A	2865012	2							
-5	PBY-5B	2865012	2							
-5	PBY-4	28G039-3								
-5	PBY-4	28G039-4								
-5	PBY-3	28G039-3								
-5	PBY-3	28G039-4								
-5	PBY-2	28G039-3						28G1055	2	
-5	PBY-2	28G039-4		AN442-D3				28G1041-4	1	
	1P3Y-1	28G039-1		PARTS ASSEMBLED ON -5 ASSY.						
	PBY-1	28G039-1						28G1055	2	
	1P3Y-1	28G039		AN442-D3				28G1041-2	1	
	PBY-1	28G039		PARTS ASSEMBLED ON 28G1041 ASSY.						

O.N.	MODEL	NEXT ASSY.	REQ.	ST'D PARTS	PART NO. LH REQ.	PART NO. RH REQ.

REPLACES

REPLACED BY 28G1041

LIMIT ON DIMENSIONS UNLESS OTHERWISE SPECIFIED ± 1/32 ± 1°

APPROVED 4-16-37 DATE

CALC. WT. ACT. WT.

SCALE FULL = 1 ING. "

REQUIREMENTS PER AIRPLANE | MAT. | PARTS LIST PER ASSY.

AC

NAVY NOTED | NOTED | NOTED | NOTED

MATERIAL | SPEC. | HEAT TREAT | FINISH

ITEM R. | DWG. | PULLEY

4-2-36 | 5-19-37

DRAFT | CHECK | EXAM. | ENG.

CONSOLIDATED AIRCRAFT CORP. BUFFALO, N. Y.

STAMP PT. No. WHERE SHOWN

NAME

ELBOW

FUEL TANK DRAIN - FLANGED

OPP. HAND

SIZE D

DWG. 28G1041

SHEET

LET	ALTERATION	DATE	BY
E	TRACED	4-16-37	H.W.
F	REAM .5615/.5625 WAS .5635 ±.0010	7/8/37	POWER
G	NOTCH IN FLANGE ADDED	8-30-37	Wiglitzka
H	-2 WAS CALLED OUT ON LOWER 3100 VIEW NOTCHES SHOWN IN ALL VIEWS	9-21-37	Wiglitzka
J	HOLE #32 (.063) ADDED	8-1-38	HOLLAND
K	REMOVED 28G1042-1 ASSY & 28G1042-3 PART & MADE -2 PART SYM. ABOUT ℄ TO BE USED FOR BOTH R.H. & L.H. PARTS.	5-5-42	HOLLANDS
L	AT -2, ONFACE, REMOVED NOTE "AL. ALLOY CASTING, SPEC 16AI CL4, H.T. NAF 5A8", ADDED "MATERIAL NOTE" No WT. CHG	8-26-43	HODIK

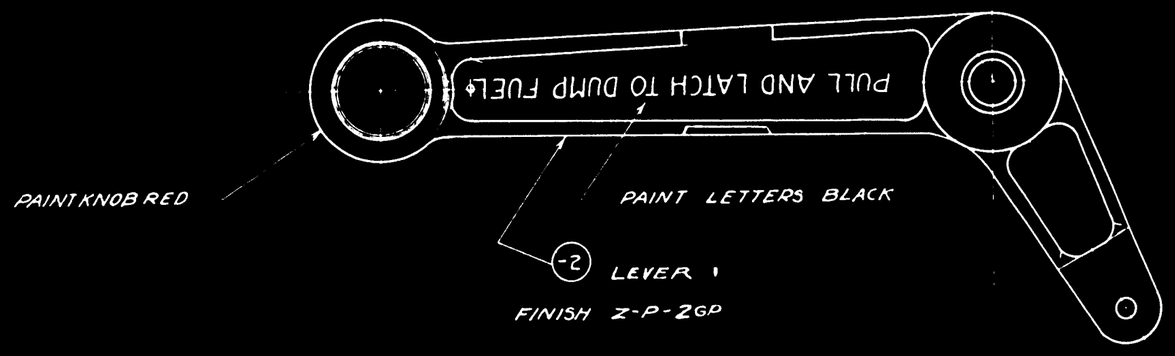

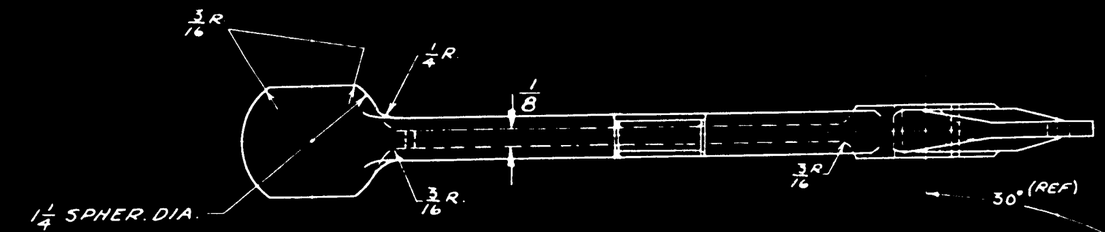

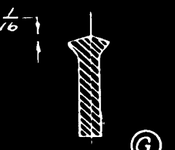

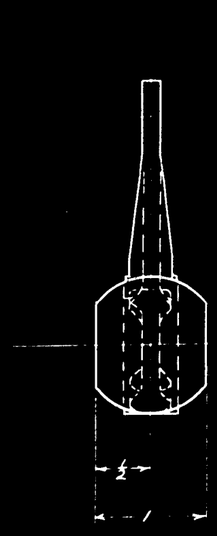

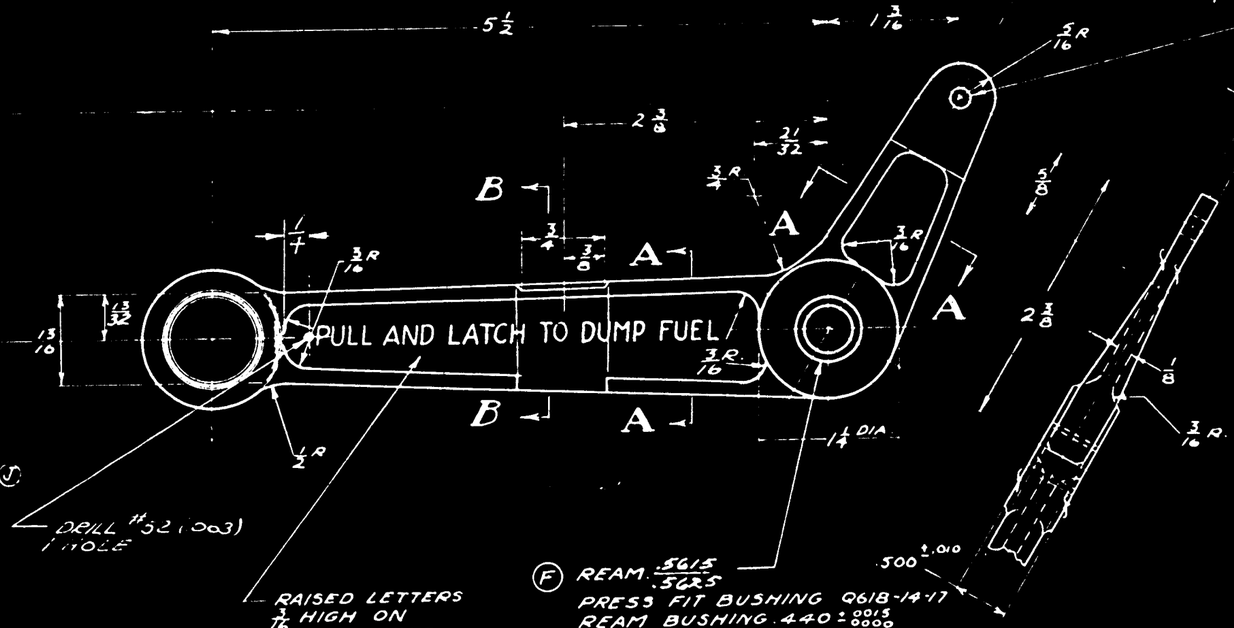

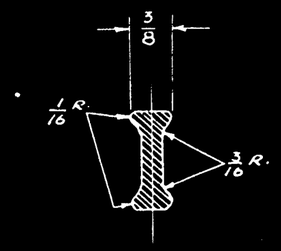

GP-GREEN PRIME

COL	
Z	ANODIC TREATMENT
P	P-27 PRIMER
AP	ALUMINIZED PRIMER
C	CADMIUM PLATE

NOTE:-
ƒ SMOOTH MACHINE FINISH
REMOVE ALL FINS & SPRUES.

(L) MATERIAL NOTE:
-2 MAY BE MADE FROM-
1.- AL. ALLOY CASTING 195 T4, SPEC. AN-QQ-A-390 CL II, T.S. 29,000 P.S.I., OR
2.- AL. ALLOY CASTING S195T6, SPEC AN-A-S CL. II, T.S. 32,000 P.S.I.

O.H.	MODEL	NEXT ASSY	REQ.	STD. PARTS
-0	PBY-5A	28G1034	2	
	PBY-5	28G1034	2	
	28-5 MC	28G1034	2	
	PBY-4	28G1034	2	
	28-5AMC	28G1034	2	
	PBY-3	28G1034	2	
	PBY-2	28G1034	2	
	PBY-1	28G1034	2	

LH REQ.	RH REQ.	PART NO.	LH REQ.	RH REQ.
		Q618-14-17	1	1
		28G1042-2	1	

REQUIREMENTS PER INPLANE MAT.

PARTS LIST PER ASSY.

REPLACES
REPLACED BY:
LIMIT ON DIMENSIONS UNLESS OTHERWISE SPECIFIED ± 1/32

APPROVED 4-16-37 DATE
25 CALC WT. ACT WT.
SCALE 12" = 1'-0"
AC
NAVY NOTED MATERIAL
CONSOLIDATED AIRCRAFT CORP. BUFFALO, N.Y.
STAMP PT. No. WHERE SHOWN

NOTED SPEC. NOTED HEAT TREAT NOTED FINISH

BOURQUE SMS MILLER
12-2-36
DRAFT CHECK EXAM. ENG.

NAME LEVER ASSY- FUEL SYSTEM- DUMP VALVE CONTROL

DWG D 28G1042

ENG. FILE

28G1042

SUPPLIES & EQUIPMENT CLASSIFICATION			
LET	ALTERATION	DATE	BY
C	TRACED	4-15-37	H.W.
D	NEXT ASS'Y. NOS. WERE 28G1046	8-4-37	[illegible]
E	CH. MAT. OF -2 & -4 FROM .032 AL. AL. 24ST SPEC. 47A10 "T" TO ALCLAD(A32) 24ST SPEC. 47A8 "T" & -3 FROM AL. AL. 24ST SPEC 47A10 "T" TO ALCLAD 24ST SPEC 47A8 "T" FOR PBY-5	4-24-37	[illegible]

C.O. 5948

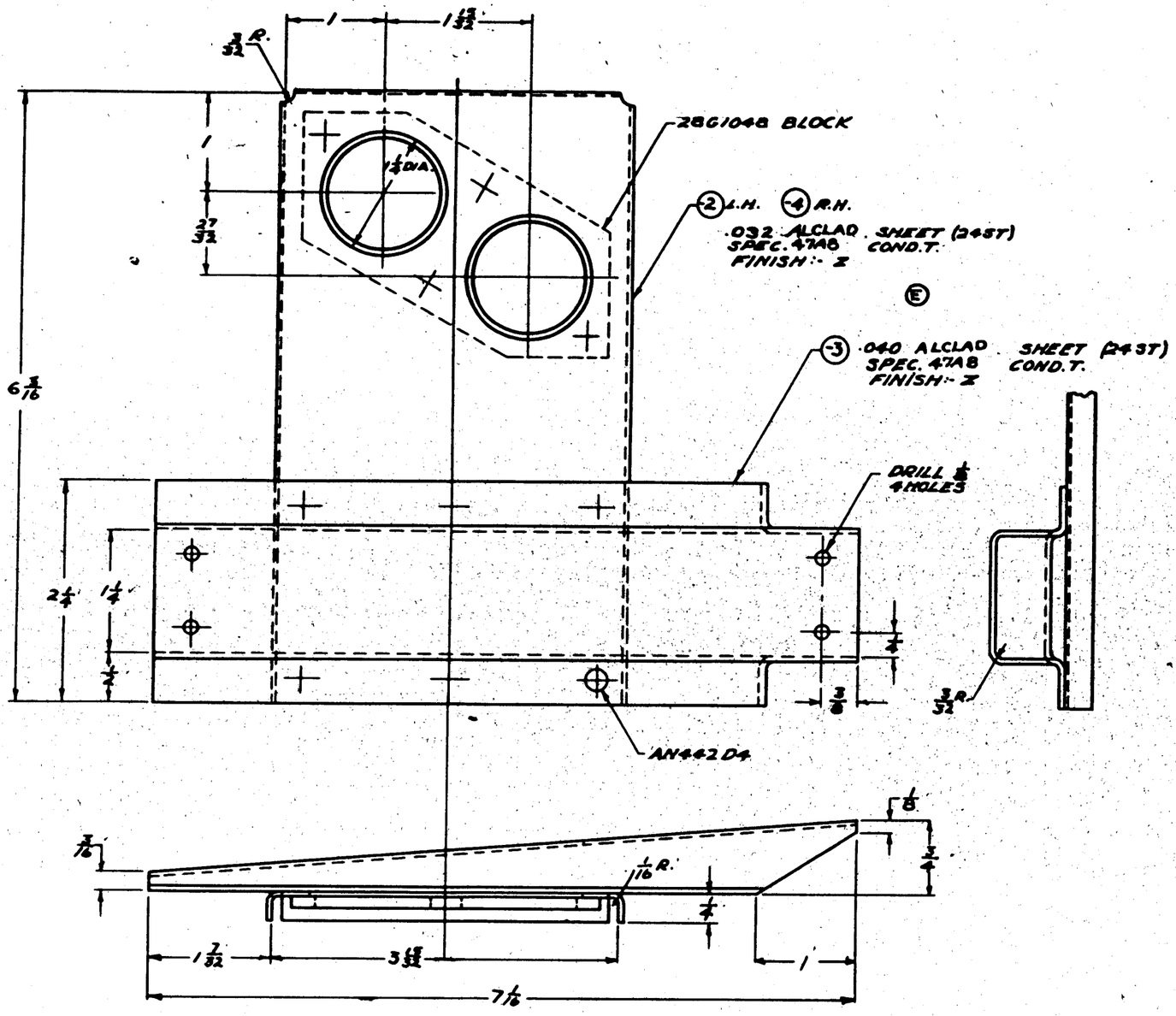

-R	PBY-5B	28W4155	1									
-L	PBY-5B	28W4155	1									
-R	PBY-5A	28W5003	1									
-L	PBY-5A	28W5005	1									
-1	PBY-5	28W4005	1									
	PBY-5	28W4005	1									
-1	PBY-4	28W4005	1									
	PBY-4	28W4005	1									
-1	PBY-3	28W4005	1							28G1048	1	1
	PBY-3	28W4005	1									
-1	PBY-2	28W4005	1									
	PBY-2	28W4005	1							-4		1
-1	PBY-1	28W4005	1							28G1046-3	1	1
	PBY-1	28W4005	1	AN442D4	10	10	28G1046-2				1	
O.H.	MODEL	NEXT ASS'Y.	REQ.	ST'D PARTS	REQ. LH	REQ. RH	PART NO.				REQ. LH	REQ. RH

REPLACES

REPLACED BY

LIMIT ON DIMENSIONS UNLESS OTHERWISE SPECIFIED ± 1/64

APPROVED 4-15-37 DATE

CALC. WT. .AB ACT. WT.

SCALE 3" = 1'-0"

AC

NAVY NOTED

MATERIAL

REQUIREMENTS PER AIRPLANE: NOTED | NOTED | NOTED

SPEC. | HEAT TREAT | FINISH

MAT.

PARTS LIST PER ASSY.

	K.W.F.	[illegible]	FULLER
	1-7-36	5-8-37	
DRAFT	CHECK	EXAM.	ENG.

CONSOLIDATED AIRCRAFT CORP. BUFFALO, N.Y.

STAMP PT. No. WHERE SHOWN

NAME BRACKET

FUEL SYSTEM-SIGHT GAGE - FRONT

OPP. HAND 28G1046-1

DWG. NO. D 28G1046

DULLAM-MORRISSEY CO., INC. BUFFALO
IMPERIAL TRACING CLOTH

SUPPLIES & EQUIPMENT CLASSIFICATION			
LET	ALTERATION	DATE	BY
C	TRACED	4-16-57	RMK
D	NEW ASSY. NO'S WERE SUPPLIED	4-16-57	[illegible]
E	CH. 028-4 FROM .030 AL. AL. 24ST SPEC 47A10"T" TO .032 ALCLAD 24ST SPEC 47A8"T" 9-3 FROM AL. AL. 24ST SPEC 47A10"T" TO ALCLAD 24ST SPEC 47A8"T" FOR PBY-5	11-25-57	[illegible]
F	2A30-CHG'D TO MS 24ST-COND"T"	8-9-49	[illegible]
	N.T. SR-53 NOTED		

C.O. 5948

E.O. 21400

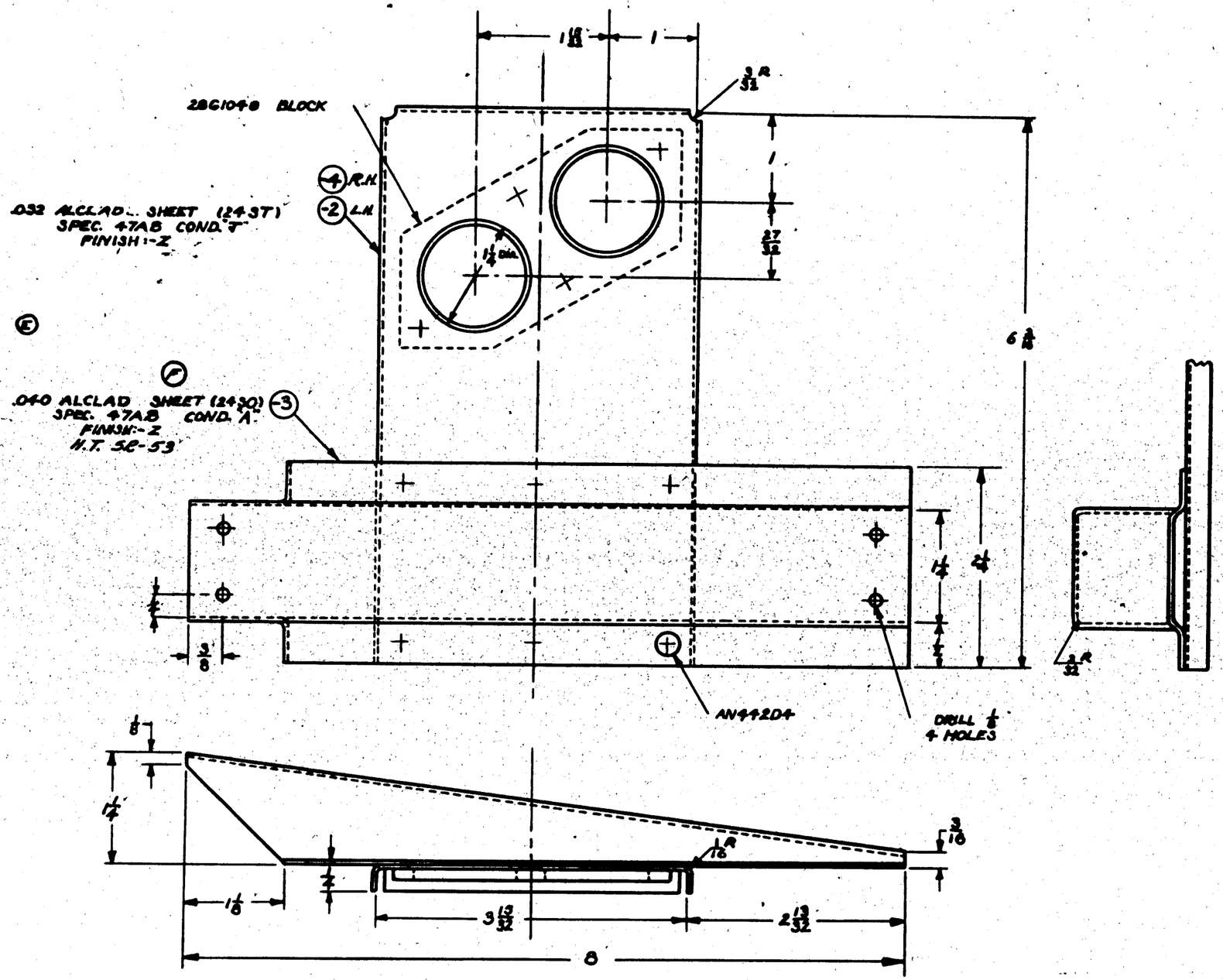

LET	PART NO.	NEXT ASSY.	REQ.	STD PARTS	LH REQ.	RH REQ.	PART NO.	LH REQ.	RH REQ.
-L;R	PBY-5B	28W4155	1EA						
-L+R	PBY-5A	28W5005	1EA						
-1	PBY-5	28W4005	1						
	PBY-5	28W4005	1						
-1	PBY-4	28W4005	1						
	PBY-4	28W4005	1				28C1048	1	1
-1	PBY-3	28W3005	1						
	PBY-3	28W3005	1						
-1	PBY-2	28W1005	1						
	PBY-2	28W1005	1				-4		1
-1	PBY-1	28W1005	1				-3	1	
	PBY-1	28W1005	1	AN442D4	10	10	2861047-2	1	

REPLACES

REPLACED BY

LIMIT ON DIMENSIONS UNLESS OTHERWISE SPECIFIED ± 1/64

APPROVED R Ash 4-16-57 DATE

CALC.WT. .28 ACT.WT.

SCALE 12" = 1'-0"

NC

NAVY NOTED

MATERIAL

REQUIREMENTS PER AIRPLANE | MAT. | PARTS LIST PER ASSY.

NOTED | NOTED | NOTED

SPEC. | HEAT TREAT | FINISH

	DRAFT	CHECK	EXAM.	ENG.
ENG'R.	1-10-58	9-17-57		

CONSOLIDATED AIRCRAFT CORP. BUFFALO, N.Y.

STAMP PT. No. WHERE SHOWN

NAME

BRACKET
FUEL SYSTEM-SIGHT GAGE-REAR

OPP. HAND 28D1047-1

SIZE D

DWG. 2861047

SUPPLIES & EQUIPMENT CLASSIFICATION			
LET	ALTERATION	DATE	BY
B	TRACED	4-16-37	H.B.

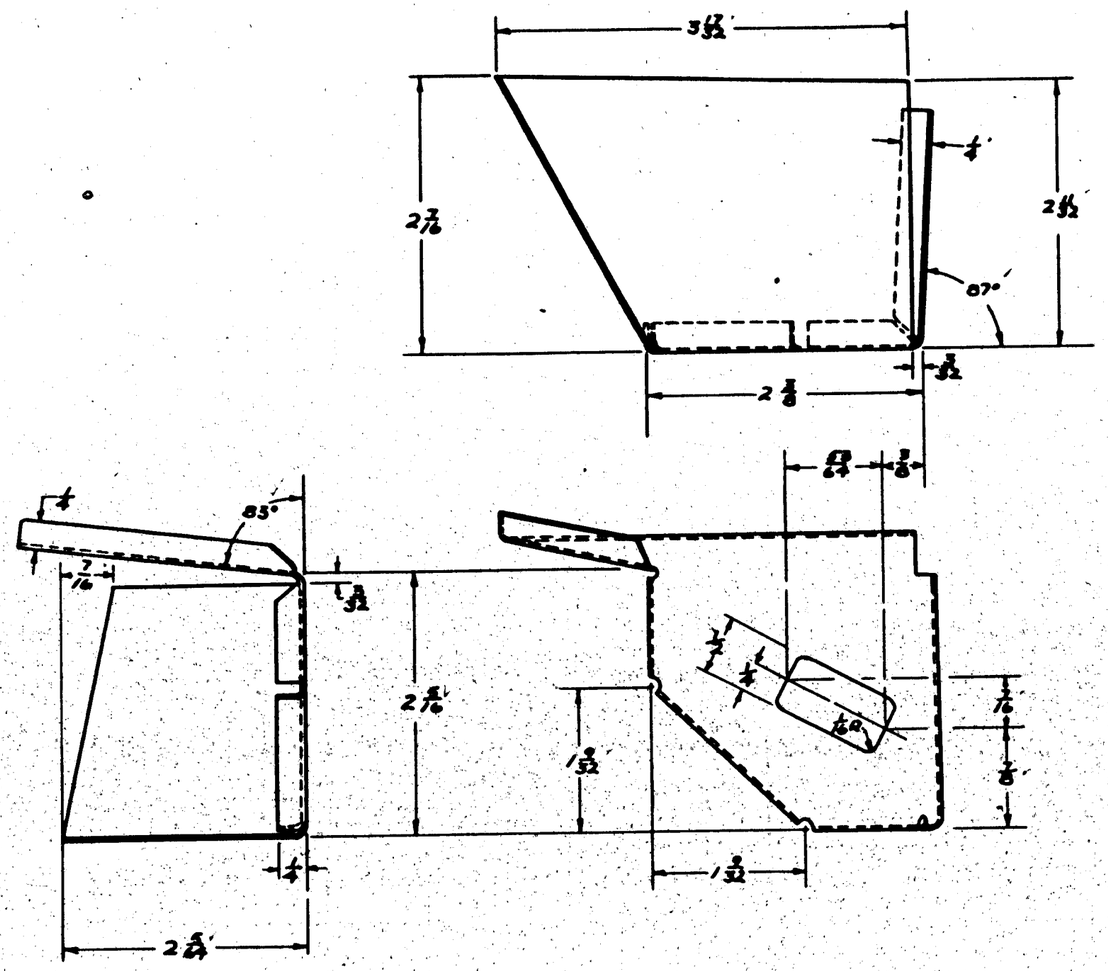

ALL BEND RADII - 1/16

SP-GREEN PRIME

[redacted]

-R	PBY-5A	2861034	1									
-L	PBY-5A	2861034	1									
-1	PBY-4	2861034-1										
	PBY-4	2861034										
-1	PBY-3	2861034-1										
	PBY-3	2861034										
-1	PBY-2	2861034-1										
	PBY-2	2861034										
-1	PBY-1	2861034-1										
	PBY-1	2861034										
C.N.	MODEL	NEXT ASSY.	REQ.	ST'D PARTS	LH REQ.	RH REQ.	PART NO.	LH REQ.	RH REQ.			

REPLACES

REPLACED BY

LIMIT ON DIMENSIONS UNLESS OTHERWISE SPECIFIED ± 1/64 ± 1°

[redacted]

APPROVED 4-16-37 DATE

CALC.WT. .07 ACT.WT.

SCALE 12" = 1'-0"

AC

NAVY 24S ALCLAD ALLOY SHEET 2937

MATERIAL

REQUIREMENTS PER AIRPLANE

MAT.

PARTS LIST PER ASSY.

47AM CONDT. NONE 2-P-2 GP

SPEC. HEAT TREAT FINISH

MATERIAL	DRAFT	CHECK	EXAM.	ENG.
	3-23-37	4-9-37		

CONSOLIDATED AIRCRAFT CORP. BUFFALO, N.Y.

STAMP PT. No. WHERE SHOWN

NAME BRACKET-FUEL SYSTEM DUMP VALVE CONTROL HANDLE SAFETY SPRING

OPP. HAND 2861073-1

D 2861073

SUPPLIES & EQUIPMENT CLASSIFICATION			
LET	ALTERATION	DATE	BY
C.	TRACED	8-10-[illegible]	[illegible]
D	ON DWG. 1/2 DIM. CHG'D TO 1/2 DIM. IN SEC. B-B & D-D.	8-27-41	[illegible]
E	DIA. 53/64 WAS 7/8 DIA. NO WT. CHG.	3-3-43	[illegible]

B.D.C. 13464

SECTION A-A

SECTION C-C

SECTION D-D

SECTION B-B

DRILL 7/8 DIA. THRU C'SINK 110° x 1 1/16 DIA. TAP 3/4 PIPE THREAD NAT'L. STD. TAPER

FINISH: P-28 OUTSIDE ONLY

DRILL #10(.193) 12 HOLES TO MATCH #28G2008 & 28G2009. SPOTFACE 1/2 DIA.

LIMITS ON CASTING ± 1/32
LIMITS ON MACHINING ± .010

CP - GREEN PRIME

NOTE:-
THIS CASTING WILL BE IN CONTACT WITH FUEL AND MUST BE LEAKPROOF UNDER TEST AIR PRESSURE OF 4 5/8" FOR 30 MINUTES.

UNLESS OTHERWISE SPECIFIED ALL FILLETS ARE 1/8 R. ALL EDGING RADII 1/16.

NOTE:-
CASTING TO BE SMOOTH & FREE OF FINS & SPRUES
-f- INDICATES SMOOTH MACHINE FINISH.

O.H.	MODEL	NEXT ASSY.	REQ.	ST'D PARTS	LH REQ.	RH REQ.	PART NO.	LH REQ.	RH REQ.	LH REQ.	RH REQ.	LH REQ.	RH REQ.	LH REQ.	RH REQ.	LH REQ.	RH REQ.
	28-5AMN	28G2006	2														
	28-5MN	"	2														
	28-5MB	"	2														
	28-5MC	"	2														
	28-5AMC	28G2006	2														
	PBY-5B	28G2006	2														
	BA-10	28G2006	2														
	28-5MA	28G2006	2														
	PBY-5A	28G2006	2														
	PBY-5	28G2006	2														
	PBY-4	28G2006															
	PBY-2	28G2006															
	PBY-2	28G2006															

REQUIREMENTS PER AIRPLANE | MAT. | PARTS LIST PER ASSY.

REPLACES	APPROVED	DATE
	[redacted]	2-10-38
REPLACED BY	GALC. WT. 43	ACT. WT.
NOTED	SCALE 12"=1'-0"	

A C

NAVY ALUM ALLOY CASTING 356-T6 | 46A1 GR. "S" | N.A.R. 5A8a | 2 & NOTED

MATERIAL | SPEC. | HEAT TREAT | FINISH

	DRAFT	CHECK	EXAM.	ENG.
Q.A.	[redacted]	O.W.M.	MILLER	
	9-19-41	9-22-41		R.

CONSOLIDATED AIRCRAFT CORP. SAN DIEGO, CALIF.

NAME OUTLET-FUEL SYSTEM-FUEL TANK SUMP

OPP. HAND

DWG. D SIZE 28G2007

SUPPLIES & EQUIPMENT CLASSIFICATION			
LET	ALTERATION	DATE	BY
A.	TRACED		
B.	ADDED NOTE TO DRAWING		
C	WALL THICKNESS INCREASED BY CHANGING FOLLOWING DIMENSIONS; 5/32 WAS 3/32, 9/16 WAS 1/8, 13/32 WAS 5/16, 5/32 WAS 3/32, 3/32 WAS 1/16 & 1 3/32 WAS 1 5/16	6-23-36	
D	NC-3 WAS NC-5	11-4-40	

E.O. 20819

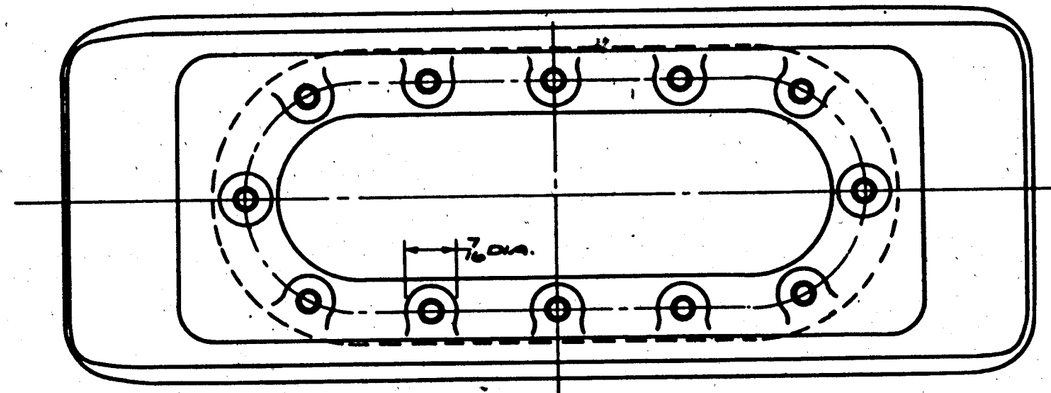

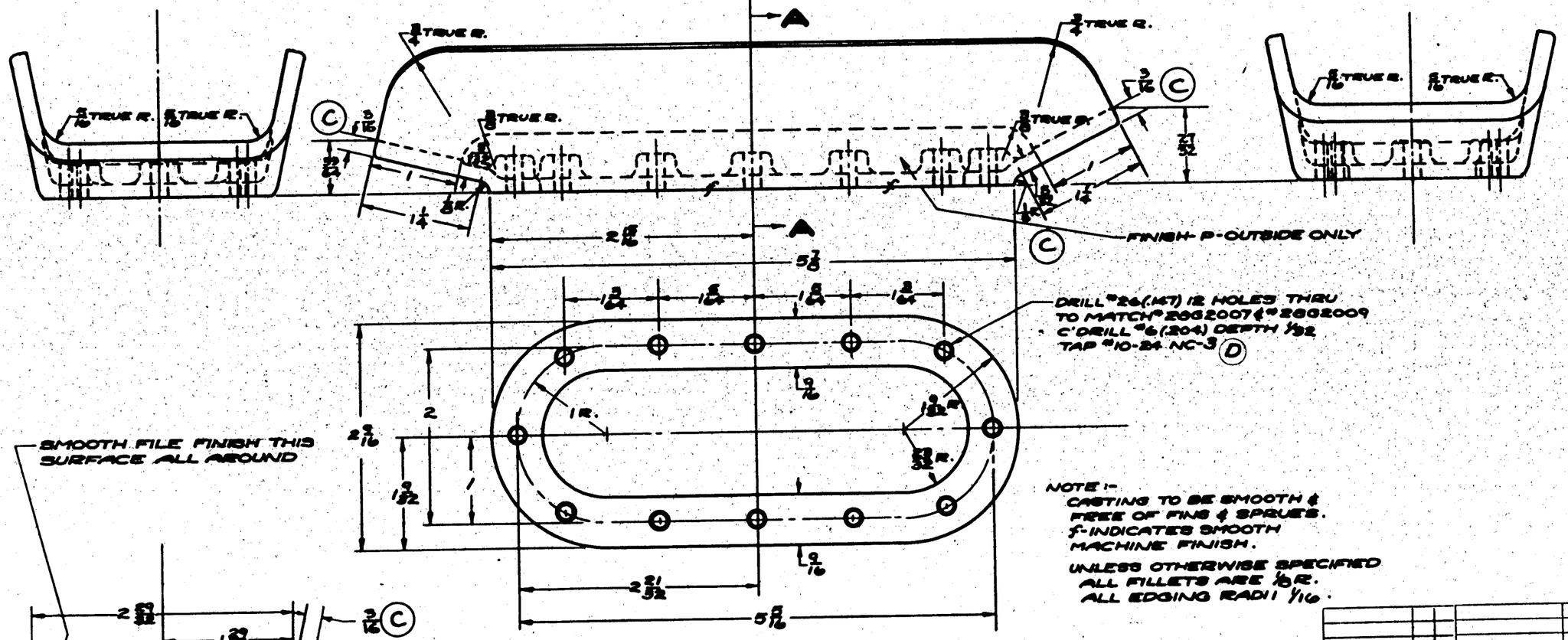

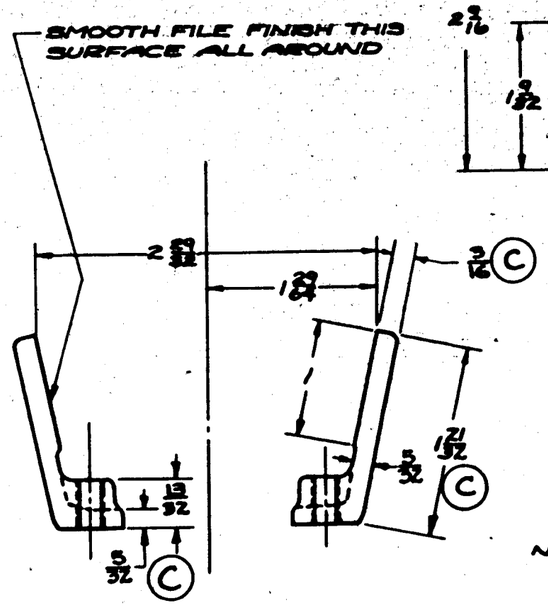

SECTION A-A

NOTE :-
THIS CASTING WILL BE IN CONTACT WITH FUEL AND MUST BE LEAKPROOF UNDER TEST AIR PRESSURE OF 4"/0" FOR 30 MINUTES.

(B)

NOTE :-
CASTING TO BE SMOOTH & FREE OF FINS & SPRUES.
f- INDICATES SMOOTH MACHINE FINISH.
UNLESS OTHERWISE SPECIFIED ALL FILLETS ARE 1/8 R.
ALL EDGING RADII 1/16.

LIMITS ON CASTINGS ± 1/32
LIMITS ON MACHINING ± .010

REPLACES	APPROVED	DATE	
REPLACED BY	.26 CALC. WT.	ACT. WT.	
NOTED	12"=1'-0" SCALE		

	PBY-5A	28G2005	2																				
	PBY-5B	28G2005	2																				
	PBY-5	28G2005	2																				
	PBY-4	2062005																					
	PBY-4	2062005																					
	PBY-3	2062005																					
	PBY-3	2062005																					
	PBY-2	2062005																					
	PBY-2	2062005																					
O. H.	MODEL	NEXT ASSY.	REQ.	ST'D PARTS	LH RH REQ.	PART NO.	LH REQ.	RH REQ.	LH REQ.	RH REQ.	LH REQ.	RH REQ.	LH REQ.	RH REQ.	LH REQ.	RH REQ.							
REQUIREMENTS PER AIRPLANE				MAT.	PARTS LIST PER ASSY.																		
A C																							
NAVY ALUM. ALLOY CASTING SHEETS	46A1 GR. 3		N.A.F. 5A8a		Z & NOTED																		
MATERIAL	SPEC.		HEAT TREAT		FINISH																		

C.E. ASSEMBLY O.W.M. MILLER

DRAFT | CHECK | EXAM. | ENG.

CONSOLIDATED AIRCRAFT CORP. SAN DIEGO, CALIF.

NAME ADAPTER-FUEL SYSTEM FUEL TANK SUMP

OPP. HAND

DWG. SIZE D

28G2006

LET	ALTERATION	DATE	BY
M	TRACED NO WT. CHG.		

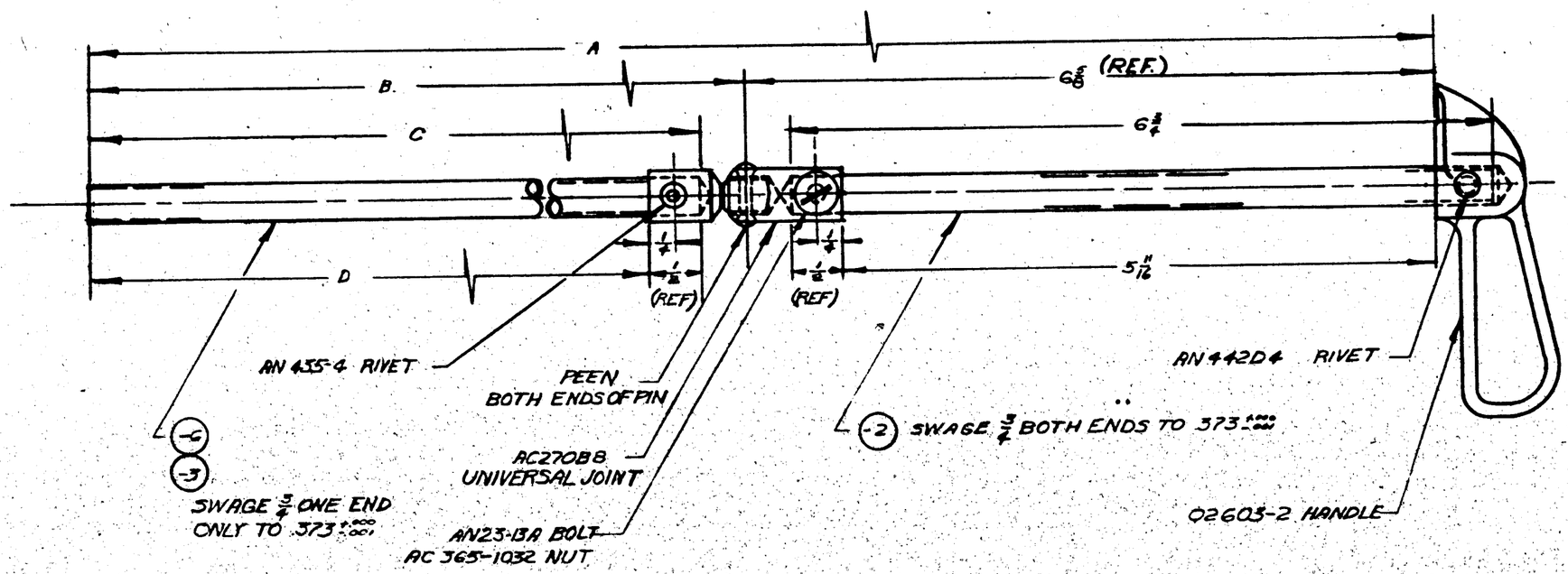

DASH NO.	A	B	C	D
-3	14 11/16	8 1/16	7 5/8	7 1/8
-6	16 3/16	9 13/16	9 3/8	8 7/8

C#88476-53 & ON
C#70496
C#77713
C#88476-110S2
C#70496
C#31876

-50	PBY-5A	28G2002	2
-0	PBY-5A		2
-0	PBY-5A		2
-0	PBY-5A		2
-0	PBY-5		2
-50	PBY-5		2
-50	PBY-5B		2
-50	28-5AMN		2
-0	28-5AMC		2
-0	28-5MN		2
-0	28-5ME		2
-0	28-5MC		2
-0	28-5MA		2
-0	PBY-4		2
-0	PBY-3		2
-0	PBY-2	28G2002	2
ASSY. DASH NO.	MODEL	NEXT ASSY.	REQ'D

REQUIREMENTS PER AIRPLANE

REPLACES 28G2012 OF 1-27-38 — Calc. Wt. .17#

REPLACED BY — Act. Wt.

± 1/64 — SCALE 12"-1'0"

STAMP PART NUMBER WHERE SHOWN

PART NO.	STOCK	MATERIAL	SPEC.
02603-2			
AN435-4			
AN442-D4			
AN23-13A			
AC365-1032			
AC270B8			
-6	3.00 D x .065 ± 2%	CMS 11018	4471B
-3	3.00 D x .065 ± 2%	CMS 11018	4471B
-2	3.00 D x .065 ± 1/2%	CMS 11018	4471B

PARTS LIST PER ASSY.

LIST	LIST	LIST	LIST	LIST	LIST	LIST	LIST	LIST	LIST
REQ'D	REQ'D	REQ'D	REQ'D	REQ'D	REQ'D	REQ'D	REQ'D	REQ'D	REQ'D
-0	-2	-3	-4	-50					

FINISH CODE

-	MACHINED ONLY
P	PAINT
GP	GREEN PAINT
C	CADMIUM PLATE

AC —
NAVY NONE — HEAT TREAT
C-P-2GP — FINISH

CHANGED LAW — DRAWN: O.W.M. 10-28-36 — SHAFT — CHECK: ARTHUR — STRESS: — MAT — APPROVED: L.C.M. 11-2-36 — ENG.

NAME SHAFT ASSEM. - FUEL SYSTEM - FUEL COCK CONTROL

OPP. HAND

DWG. D — 28G2012

GLENDALE VALVE AIRCRAFT CORP. [illegible]

2102982

LET	ALTERATION	DATE	BY
F	REDRAWN TO DATE	2/12/42	[illegible]
G	ADDED NOTE: "ALTERNATE - - -		
*	COND N° WT CHG NEC	10-12-42	BRADLEY
H	CHANGED VIEW OF AC270B-8	10-24-42	IVERSEN
J	AN960-AL8L WAS AN960-8 W/WASHER	1-18-43	BUSSARD

Q

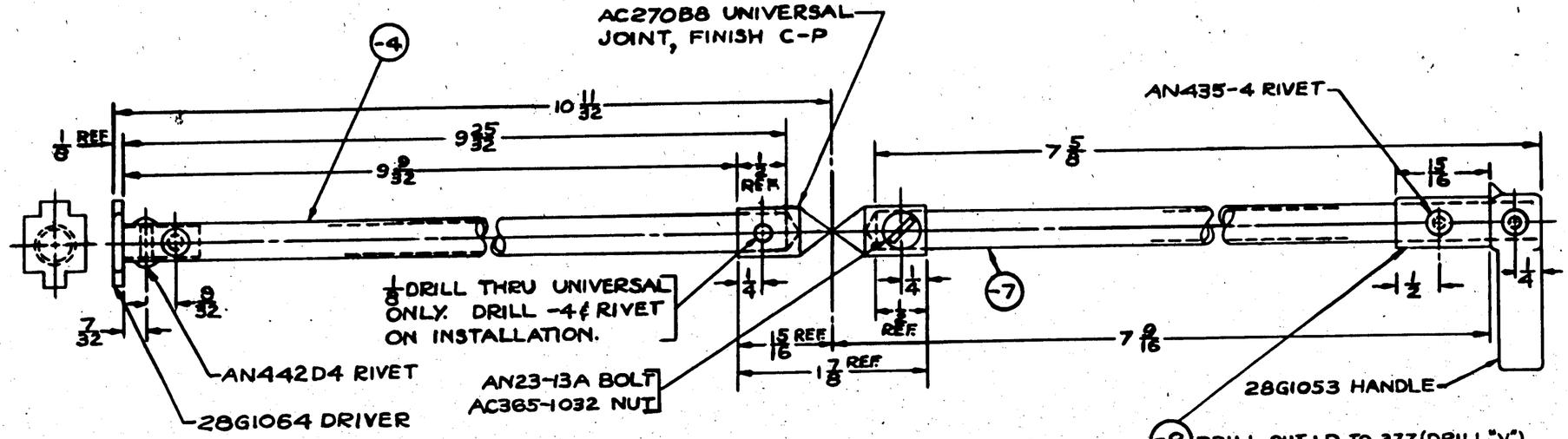

DETAIL OF -2 SHAFT ASSEMBLY

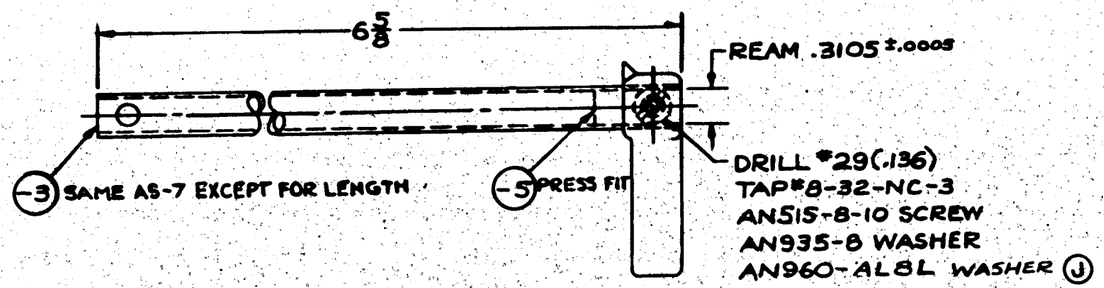

DETAIL OF -6 SHAFT ASSEMBLY
SAME AS -2 ASSEMBLY EXCEPT AS SHOWN

NOTES

(G) *ALTERNATE MATERIALS FOR -3, -7 & -8: "CHROME-MOLY WELDED TUBING, AN-T-3, TYPE I, COND. N" & "CHROME-MOLY SEAMLESS TUBING, AN-WW-T-850, COND. N."

FINISH -4 & -5 Z-P; -3, -7 & -8 C-P

FINISH CODE	
Z	ANODIC TREATMENT
P	P-27 PRIMER
AP	ALUMINIZED PRIMER
C	CADMIUM PLATE
GP	GREEN PRIME

PART No	STOCK	MATERIAL	SPEC.	LH REQ. -0	RH REQ. -2	LH REQ. -3	RH REQ. -4	LH REQ. -5	RH REQ. -6	LH REQ. -7	RH REQ. -8
AN442D4											
AN960-AL8L											
AN935-8											
AN515-8-10											
AC270B8											
AC365-1032											
AN23-13A											
28G1064											
28G1063											
-5	5/16 DIA. x 3/4	AL. AL. ROD	4649 COND T								
-4	.990 O.D. x .035	AL. AL. TUBE	4472 COND T								
* -3	1.050 O.D. x .049	C.M.ST. TUBE	4130								
-6	SUB-ASSEMBLY										
AN435-4											
AN442D4											
AC270B9											
AC365-1032											
AN23-13A											
28G1053											
28G1064											
* -8	1/2 O.D. x .065	C.M.ST. TUBE	4130								
* -7	1.050 O.D. x .049	C.M.ST. TUBE	4130								
-4	.990 O.D. x .035	AL. AL. TUBE	4472 COND T								
-2	SUB-ASSEMBLY										

PARTS LIST PER ASSY.

ASSY. DASH No.	MODEL	NEXT ASSY.	QTY.
-2/-6	PBY-5B	28G2002	2/1
-2/-6	28-5'S	28G2002	2/1
-2/-6	PBY-5A	28G2002	2/1
-2/-6	PBY-5	28G2002	2/1
-2/-6	PBY-4	28G2002	2/1
-2/-6	PBY-3	28G2002	2/1
-2/-6	PBY-2	28G2002	2/1

REQUIREMENTS PER AIRPLANE

REPLACES 28G2016 DR 10/16/42 — SEE SHEET 2 FOR CALC. WT.

REPLACED BY — ACT. WT.

SCALE 12"=1'-0"

± 1/64

STAMP PART NUMBER WHERE SHOWN

AC			KALLIS	O.W.M. 10/16/42	MILLER		LCW	R.	
NAVY NONE	2GP & NOTED		WHEELER 12/12/42		PH.W.H.				
HEAT TREAT	FINISH		DRAFT	CHECK	STRUCT	MAT	APPROV	ENG	

NAME SHAFT ASSEMBLY FUEL PLUG VALVE CONTROL

CONSOLIDATED AIRCRAFT CORP. SAN DIEGO, CALIF.

OPP. HAND

SIZE D — DWG. 28G2016

R

SUPPLIES & EQUIPMENT CLASSIFICATION			
LET	ALTERATION	DATE	BY
C.	TRACED	8-OCT-38	[redacted]
D.	-2 WAS SPEC. 47A10-T	11-Dec-39	[redacted]
E.	REMOVED COTTER REQ.		
	AN3-4A WAS AN3-4		
	AN365-1032 WAS AN310-3	4-Feb-40	[redacted]
F.	1 5/16 DIAM. WAS 1 1/2	11-Feb-40	[redacted]
G.	ADDED -8 TO FACE OF DWG. & 5/16 R. -10 ASSY. CREATED.	4-JAN-41	[redacted]
H	CORRECTED DIM & BROUGHT DWG. UP TO DATE	6-Jan-41	[redacted]
J.	ADDED TABLE FOR -4 & -8	5-17-41	[redacted]
K	-2 & -6 ADDED TO DIM. CHART C D & F DIM. SPECIFIED	7/1/41	GRAY
L	CHG'D -10 ASSY. TO -0 ASSY. FOR 28- SAMC & PBY-5A, NO WT. CHG.	7/25/42	[redacted]
M	1 1/2 DIA. WAS 1 5/8, NEG. WT. CHG.	7/25/42	[redacted]
N	10 7/8 WAS 11 1/8, 7 WAS 7 1/16 (NO WT. CHG.)	10-13-42	[redacted]

E.O. 18305
E.O. 25024
E.O. 25112
E.O. [redacted]
PBY-5A
OA-10
E.O.A-3722 NOTED
E.O. A635 PBY-5A & AO-10
E.O. A 21167
E.O. A 21958

PART NO.	C	D	E	F	G	H
-2		2 5/16		1 3/32		
-4	1 1/2	2 3/4	3/16	1 3/32	2 3/4	1 3/32
-6		2 3/8		1 3/4		
-8	1 1/16	2 7/8	5/32	1 3/4	3	1 1/2

(K)

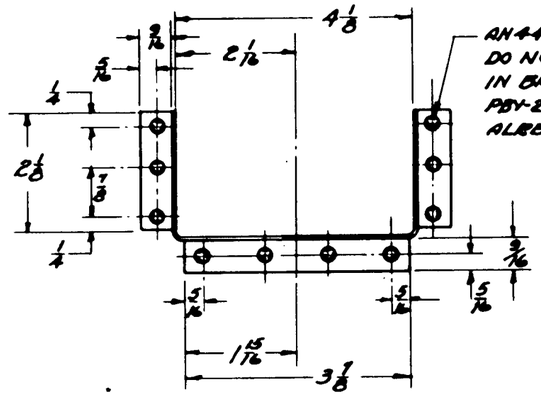

SECTION A-A
-4, -8 NOT SHOWN

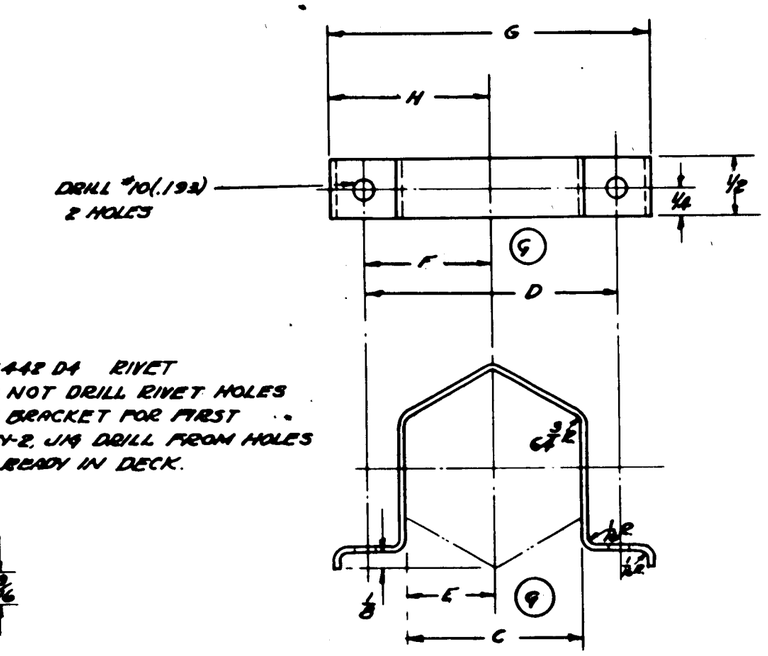

DETAIL -4, -8 CLIP
.064 AL. ALLOY SH'T. (2430)
SPEC. 47A10 COND. A
H.T. SR 53 AFTER BENDING
FINISH Z-P-26P
SCALE - FULL SIZE

(L) BRACKET .051 AL. ALLOY SH'T. (2430)
SPEC. 47A10 COND. A
BEND RADII 1/8 (D)
FINISH Z-P-26P
(ON -0 ASS'Y)
-6 ON -10 SAME AS -2 EXCEPT FOR HOLES FOR CLIPS

(G) (-4) (-8) CLIP - SEE DETAIL
AN3-4A BOLT
AC365-1032 NUT (E)

(N) 10 7/8

℄ SHIP

3 1/2
1 3/4 DIA. HOLE. (F) (M)
1 3/4
1/4
1 3/8
D
F
(G)
3/8
A
7 1/16
6 1/4 R.
8 3/8
A
B
B
1 1/32 (REF.)
6° (REF.)

VIEW LOOKING AFT.

(-5) REINFORCEMENT .030 AL. ALLOY SH'T. (2430)
SPEC. 47A10 COND. A.
H.T. SR-53 AFTER BENDING
FINISH Z-P-26P

TRIM END ON ASSEM.

TYPE 'D-4 FUEL COCK (REF.)

(N) 7

℄ BLKHD #4

℄ DECK LINE

FORWARD

SIDE VIEW

SP-GREEN PRIME THROUGH GRID

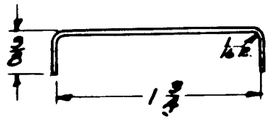

SECTION B-B
FULL SIZE

O. H.	MODEL	NEXT ASSY.	REQ.	ST'D PARTS	LH REQ.	RH REQ.	PART NO.	LH REQ.	RH REQ.	LH REQ.	RH REQ.	LH REQ.	RH REQ.	LH REQ.	RH REQ.
-0	28-5AMC	28G2002	1												
-0	PBY-5A	28G2002	1												
-10	PBY-5B	28G2002	1												
-10	28-5AMN	28G2002	1												
-10	PBY-5	28G2002	1												
-10	28-5 MN	28G2002	1												
-10	28-5 MA	28G2002	1												
-0	28-5 ME	28G2002	1												
-10	28-5 ME	28G2002	1												
-10	PBY-5A	28G2002	1												
-10	PBY-5	28G2002	1												
-10	28-5 MC	28G2002	1												
-0	28-5 MA	28G2002	1				28G2018 -8	1		2					
-0	PBY-5	28G2002	1	AN442D4	4		28G2018-5	1		1					
-0	PBY-4	28G2002	1				28G2018 -4	1							
-0	PBY-3	28G2002	1	AC365-1032	4		28G2018 -6			1					
-0	PBY-2	28G2002	1	AN3-4A	4		28G2018-2	1							

REQUIREMENTS PER AIRPLANE | MAT. | PARTS LIST PER ASSY. | -0 | -10

REPLACES	CLW APPROVED	2-15-38 DATE
REPLACED BY	35 CALC. WT.	5MA ACT. WT.
LIMIT ON DIMENSIONS UNLESS + OTHERWISE SPECIFIED 1/32	6'-10 5/8 SCALE	NOTED

A C				
NAVY	NOTED	NOTED	NOTED	NOTED
MATERIAL		SPEC.	HEAT TREAT	FINISH

DRAFT	CHECK	EXAM.	ENG.
A.M.37	S.P.S.37		R.

CONSOLIDATED AIRCRAFT CORP.
SAN DIEGO, CALIF.
STAMP PT. NO. WHERE SHOWN

NAME: SUPPORT ASSEM.- FUEL CROSS FEED VALVE

OPP. HAND

DWG. SIZE D — 28G2018

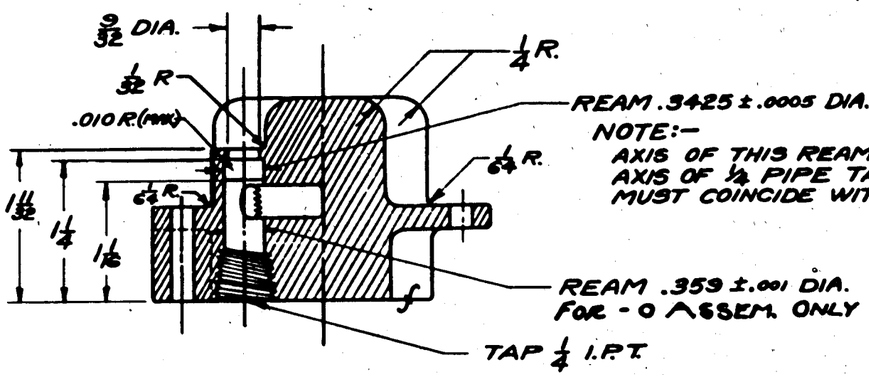

SECTION **A-A**

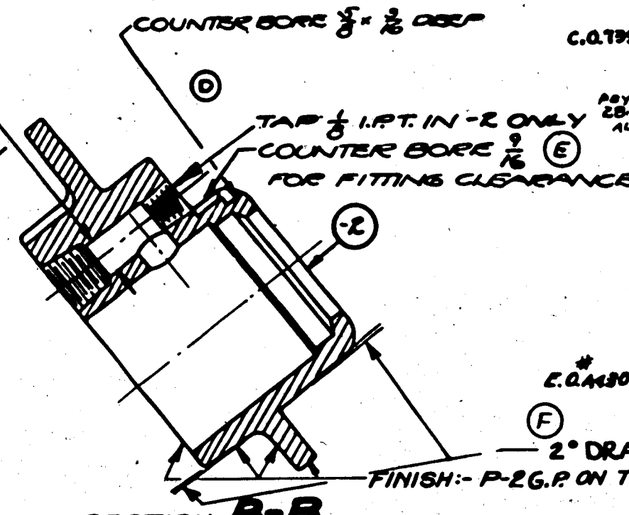

SECTION **B-B**

(G) 23/64 DIA. FOR -2 ONLY

SUPPLIES & EQUIPMENT CLASSIFICATION			
LET	ALTERATION		
A	TRACED		
B	5/16 WAS 3/8, 1/4 WAS 5/16 &	C.O. 7987	
	ADDED CUT-OUT & SECTION		
C.	ADD D REV-1		
D	ADDED -2	PBY-3 28-ME ALL	
E	5/16 C'BORE WAS 3/8		
F	REMOVED DRAFT & NOTE		
	FROM BOTTOM VIEW & FINISH		
	NOTES FROM DWG. ADD'L:		
	2° DRAFT NOTE (4 PLACES)		
	CHG'D TO STANDARD		
	MOULD CASTING		
(G)	IN SECTION B-B ADDED		
	DIM. & END NOTE		
H	REMOVED NOTE (H)		
	NO CUT CAMS	C.O. 8430	
J	7/8 WAS 1 1/4 - MFG. W/C CHG.		

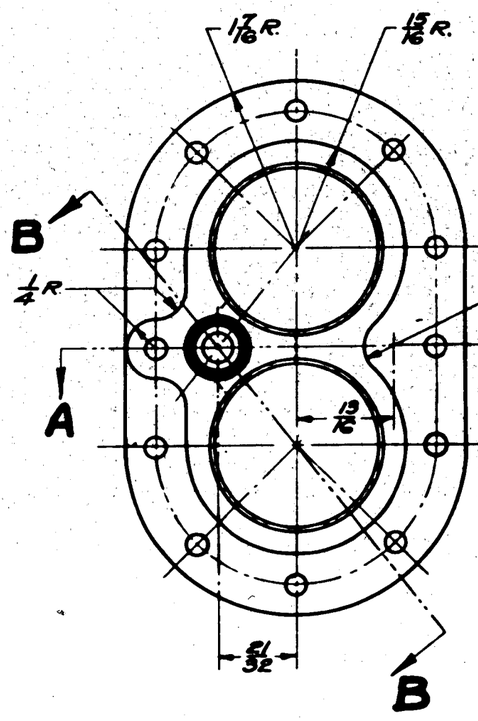

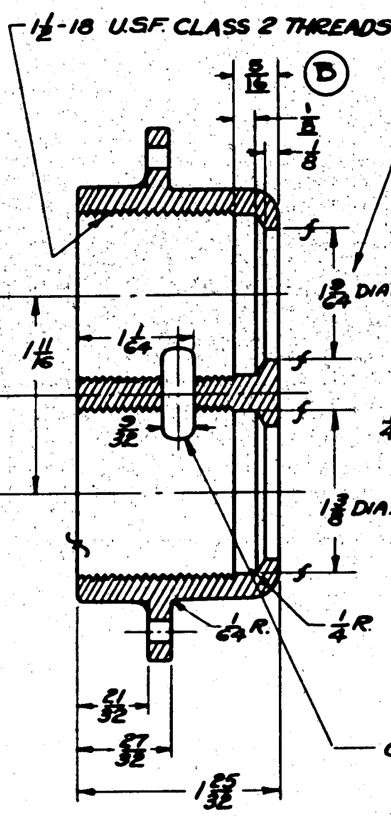

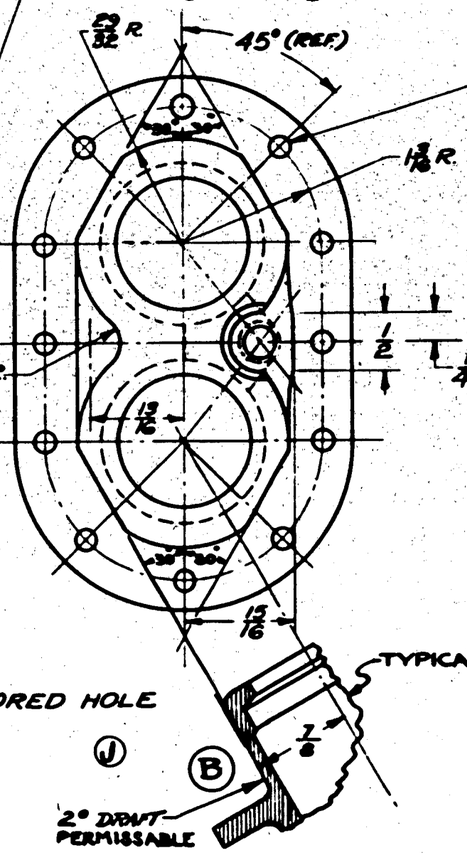

FINISH SCHEDULE	
Z	
Y	
X	
C	

PBY-4 30 "930-6 CONTRACT CHG. C"
PBY-3 30 "926-48 CONTRACT CHG. V"
PBY-1 & PBY-2 30 "927-180

NOTES:-

(H)

(1) UNLESS OTHERWISE SPECIFIED:-
ALL FILLETS 1/8.
ALL CORNER RADII 1/32.
LIMITS ON CASTING ± 1/32.
LIMITS ON MACHINING ± .010

(G) (D) (2) 28G3003-2 SAME AS 28G3008 EXCEPT AS NOTED IN SECTION B-D.

-2	PBY-4	28G3002	4				
-2	PBY-5B	28G3002	4				
-2	28-5AMC	28G3002	4				
-2	28-5AMC/AMM	28G3002	4				
-2	28-5MC	28G3002	4				
-2	28-5MA	28G3002	4				
-2	PBY-5A	28G3002	4				
-2	PBY-5	28G3002	4				
-2	28-5ME	28G3002	4				
-0	PBY-2	28G3002	4				
-0	PBY-1	28G3002	4				
-0	PBY-4	28G3002	4				
-0	PBY-3	28G3002	4				

REPLACES					
REPLACED BY					
LIMIT ON DIMENSIONS UNLESS O.[illegible]	± NOTED				
APPROVED	4-15-38 DATE	CALC.WT.	ACT.WT.	O.N.	MODEL
SCALE	12"=1'-0"	REQUIREMENTS PER AIRPLANE			
AC					
NAVY					
MATERIAL		SPEC.	HEAT TREAT	FINISH	
CONSOLIDATED AIRCRAFT CORP. BUFFALO, N.Y.		STAMP PT. No. WHERE SHOWN			

NEXT ASSY	REQ	BY ID PARTS	MAT.	
46A15-41		Z & NOTED		

NAME
FLANGE-FUEL SYSTEM SIGHT GAGE-OUTER

DWG. NO. D 28G3003

SUPPLIES & EQUIPMENT CLASSIFICATION			
LET	ALTERATION	DATE	BY
B	TRACED	9-30-38	Brooks
C	REVISED CONTOUR OF LUG	7-7-38	Kilburn
D	ADDED 1/32 DISTANCE		
E	PB2Y-2 REQ ADDED	24-9-39	[illegible]
F	ADDED [illegible]	[illegible]	[illegible]
G	[illegible]	[illegible]	[illegible]
H	[illegible]	[illegible]	[illegible]
J	REVISED DRILL NOTE. ADDED	5-21-41	[illegible]
	-2 REQ'MTS. E.O. PREVIOUSLY		
	INCORRECTLY INCORPORATED.		
K	IN MAT'L, REPLACED "AL. ALLOY CS75,"		
	"46 AI-CL4," & "MIL SAB" WITH "NOTED,"		
	TO FACE ADDED MATERIAL NOTE.		
	NO WT. CHG.	8-26-43	HOOK

E.O. 19614
E.O. 19978
E.O. 19618
PB2Y-2

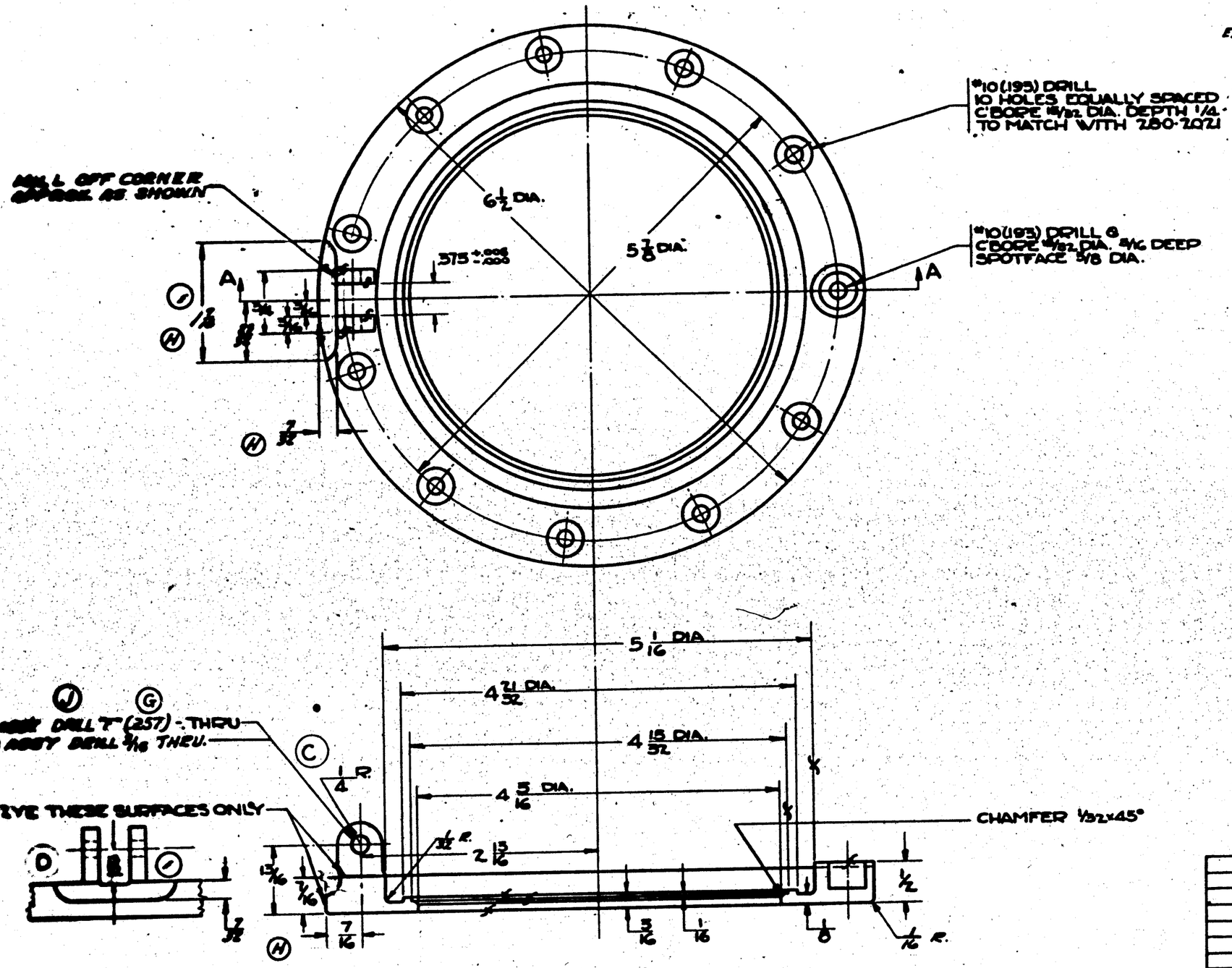

LIMITS:
±1/32 CASTING
±.010 MACH.

YE-YELLOW ENAMEL
FINISH 6080

	28-5AHA	28G3010	2												
	28-5AHC	28G3010	2												
	28-5AN	28G3010	2												
	28-5AE	28G3010	2												
	28-5AC	28G3010	2												
	28-5A	28G3010	2												
	PBY-5B	28G3010	2												
	PBY-5A	28G3010	2												
	PBY-5	28G3010	2												
-2	PB2Y-2	29G1003	2												
	XPBLY-1	29G018													
	PBY-4	28G3010													
	PBY-3	28G3010													
	O.H.	MODEL	NEXT ASSY.	REQ.	ST'D PARTS	LH REQ.	RH REQ.	PART NO.	LH REQ.	RH REQ.					
	REQUIREMENTS PER AIRPLANE				MAT.	PARTS LIST PER ASSY.									
	NOTED		NOTED		Z & NOTED										
	SPEC.		HEAT TREAT		FINISH	DRAFT	CHECK	EXAM.	ENG.						

(E)

REPLACES
REPLACED BY
LIMIT ON DIMENSIONS UNLESS OTHERWISE SPECIFIED ± NOTED

APPROVED [illegible] DATE 5-29-38
CALC. WT. .75 ACT. WT.
SCALE 12" = 1'-0"
AC
NAVY NOTED
MATERIAL

CONSOLIDATED AIRCRAFT CORP. BUFFALO, N. Y.

NAME BODY
FUEL TANK FILLER

OPP. HAND
SIZE D
28G3003

(G) MATERIAL NOTE:
MATERIAL MAY BE-
1- AL. ALLOY CASTING 195T4, SPEC. AN-QQ-A-390 CL.I, T.S. 28,000 P.S.I., OR
2- AL. ALLOY CASTING 356T6, SPEC. AN-A-5 CL. II, T.S. 32,000 P.S.I.

SUPPLIES & EQUIPMENT CLASSIFICATION			
LET	ALTERATION	DATE	BY
N	TRACED NO. WT. CHG.	10-12-43	

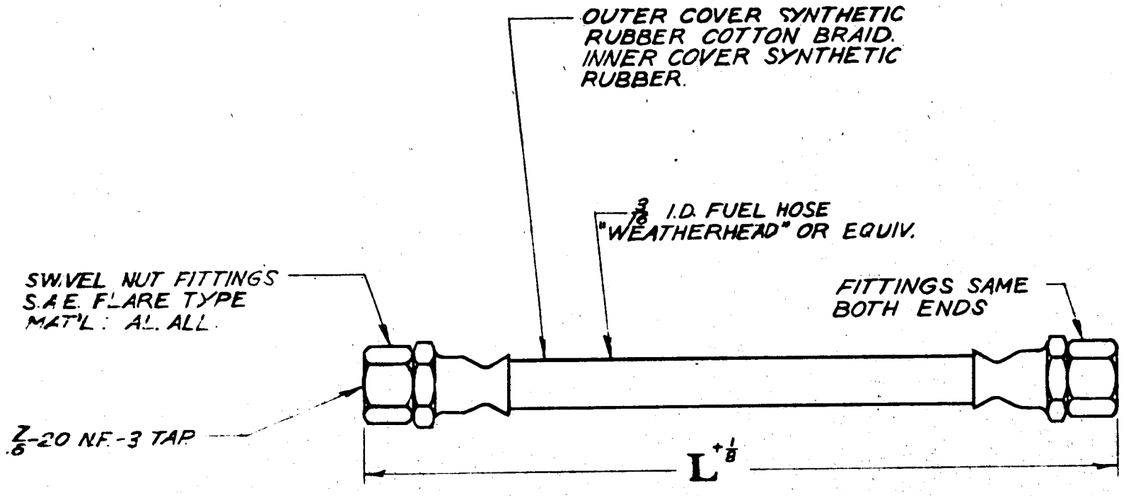

PART NO	L	NAME	WT.
28G3014-2	41½	L.H. FUEL	.43
28G3014-3	34½	R.H FUEL	.38
28G3014-4	21	L.H FUEL	.21
28G3014-5	31½	R.H FUEL	.32
28G3014-6	56	ELEC-POWER UNIT-UPPER	.52
28G3014-7	78	ELEC-POWER UNIT-LOWER	.66
28G3014-8	7¼	PROP ANTI-ICER	.21
28G3014-9	40	L.H. FUEL	.43
28G3014-10	36½	R.H. FUEL	.38

C70496, 77713, 88476 *1T052-10 PBY-5A 2863000 1
C70496 ONLY -10 PBY-5 " 1
C70496, 77713, 88476 *1T052 -9 PBY-5A " 1
C70496 ONLY -9 PBY-5 2863000 1
M.C.R. 291-1 -8 PBY-5A 2863000 2
c. 70496, 77713, 88476 to M.C.R. 291-1 -8 PBY-5 2863000 2
-6 PBY-5-15A 2863000 2 EA
-8 PBY-5B 2863000 2
-6 PBY-5B 2863000 2
-10 28-5MC4MN 2863513 1 EA
-10 28-5MC4NE " 1 EA
-10 28-5MC4HN " 1 EA
-9 28-5MC4HN " 1 EA
-9 28-5MC4NE " 1
-9 28-5MC4KN " 1
-6 28-5MC4KN 2863513 1 EA
-8 28-5MC4HN 2863000 2 EA
-8 28-5MC4NE 2863000 2 EA
-8 28-5MC4KN 2863000 2 EA
-6 28-5MC4HN 2863000 2 EA
-6 28-5MC4NE 2863000 2 EA
-6 28-5MC4KN 2863000 2 EA
-10 PBY-5 2863000 1
-9 PBY-5 " 1
-8 PBY-5 " 1
-6 PBY-5 " 1
-3 PBY-5 2863000 1
-4 PBY-5 2863000 1
-7 XPBY-5Y-1 2863100 1
-6 XPBY-5Y-1 2863100 1
-3 XPBY-5Y-1 2863001 1
-2 XPBY-5Y-1 2863001 1

1T050-60 &ON

ASSY DASH NO.	MODEL	NEXT ASS'Y	QTY
REQUIREMENTS PER AIRPLANE			
REPLACED 28G3014 A-91-38		NOTED	QTY
REPLACED BY			ACT WT
UNLESS OTHERWISE SPECIFIED ± NOTED		SCALE 12" = 10"	

28G3014 -10	NOTED	NOTED	NOTED
-9			
-8			
-7			
-6			
-5			
-4			
-3			
28G3014 -2	NOTED	NOTED	NOTED
NO.			SPEC.

LH	RH	LD	RN						
FPD.									
-0									

NOTE: MATERIAL
SYNTHETIC RUBBER; ZM-048, TYPE II, GRADE "B"

FUEL HOSE WORKING PRESSURE 170#
TEST PRESSURE 320#
TEMPERATURE TOLERANCE -35° TO +300°F
TESTED & GUARANTEED BY MANUFACTURER.
PURCHASE FROM "WEATHERHEAD CO", CLEAVELAND, OHIO OR EQUIV.

[redacted]

A.C.			DRAWN			KCW
DWG. NONE	ANODIZE FITTINGS	5-25-37				5-25-37
HEAT TREAT	FINISH	DRAFT	CHECK	STRESS	MAT.	APPROV.	ENG.

NAME TUBE ASSEMBLY FUEL-FLEXIBLE

CONSOLIDATED AIRCRAFT CORP. SAN DIEGO, CALIF.

SPEC. NUMBER D 28G3014

#105287

LET	ALTERATION	DATE	BY
A	ADDED FUEL LINE SHUT-OFF VALVE	12-15	
B	ADDED NOTE "FOR USE ONLY WITH ALUM. ALLOY FUEL LINES" NO. WT CHG	6-20-40	

PBY-5 FUEL SYSTEM DIAGRAM

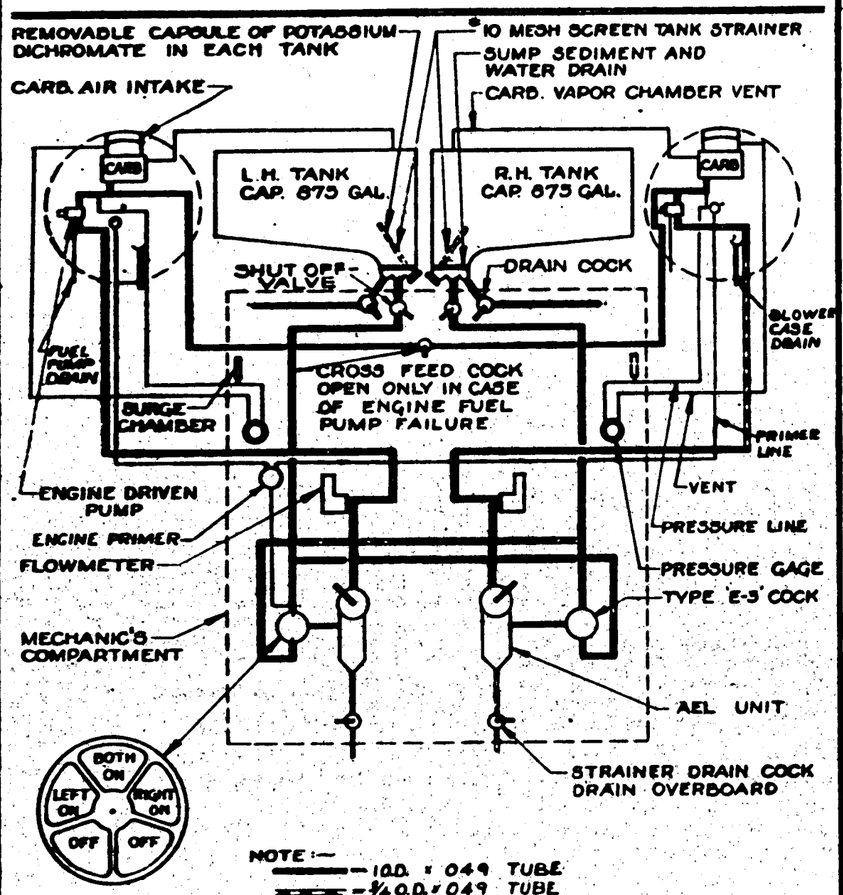

NOTE :—
- ——— 100. × 049 TUBE
- ——— 1/4 O.D. × 049 TUBE
- ——— 3/8 O.D. × 032 TUBE
- ——— 1/2 O.D. × 032 TUBE

ALL TUBING 13 AL. ALLOY (3250) SPEC 44T32-TEMP. 'A'

CONSOLIDATED AIRCRAFT CORP. SAN DIEGO, CALIF. - DWG. Nº 28G5001

TRIM BLUE PRINT COPIES ON THIS LINE

SEE NOTE

ASSY DASH NO.	MODEL	NEXT ASSY.
	PBY-5B	28G081
	PBY-5A	28G081
	PBY-5	28G081

REQUIREMENTS PER AIRPLANE

REPLACES 28G3001 OF 5-20-37 FOR PBY-5 — CALC. WT.

REPLACED BY — ACT. WT.

SCALE

STAMP PART NUMBER WHERE SHOWN

(8) FOR USE ONLY WITH ALUM. ALLOY FUEL LINES.

BLUE PRINT

PART NO.	STOCK	MATERIAL	SPEC	LH REQ. -0	RH REQ. -2	LH REQ. -3	RH REQ. -4	LH REQ. -5	RH REQ.

PARTS LIST PER ASSY.

A C
NAVY
HEAT-TREAT — FINISH

J. HALLEY 5-18-40 — DRAFT CHECK STRUCT. MAT APPROV. ENG.

NAME DIAGRAM FUEL SYSTEM

OPP HAND

CONSOLIDATED AIRCRAFT CORP. SAN DIEGO, CALIF.

SIZE D — DWG 28G5001

LET	ALTERATION	DATE	BY

FUEL SYSTEM DIAGRAM

FOR SELF SEALING FUEL LINES ON MODELS PBY5,5A

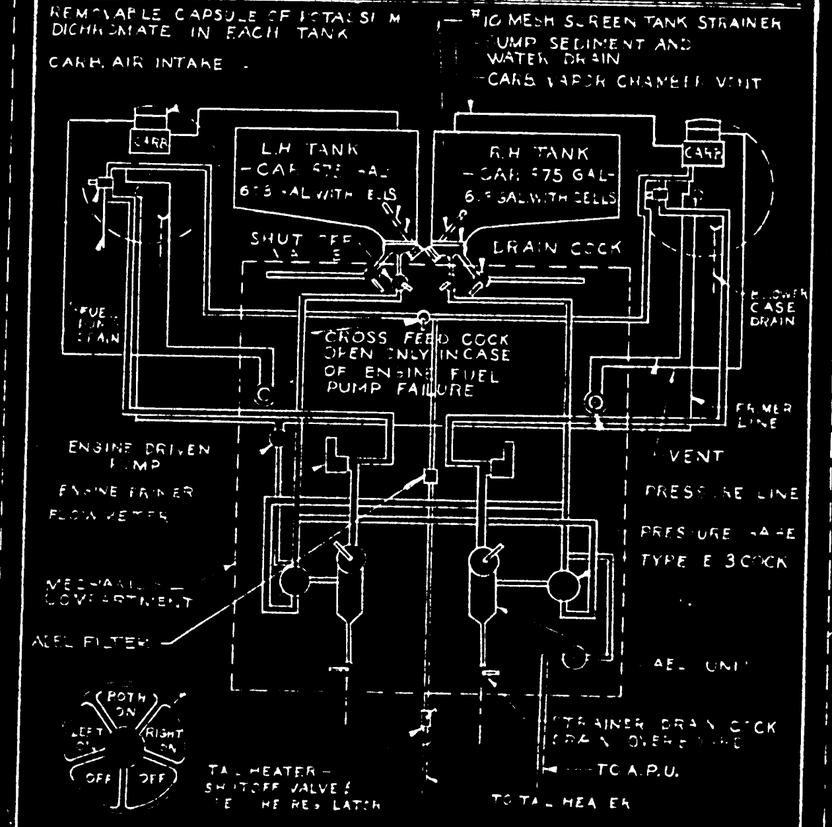

CONSOLIDATED VULTEE AIRCRAFT CORP.
SAN DIEGO, CALIF. DWG NO 28G5002

TRIM BLUE PRINT COPIES ON THIS LINE

MCR 1660 A/CH

NOTE: FOR USE ONLY WITH SELF SEALING FUEL LINES

ASSY. DASH NO.	MODEL	NEXT ASSY.	REQ.
	PBY-5A	28-5142	1
	PBY-5	28G5143	1

REQUIREMENTS PER AIRPLANE

REPLACES — Calc Wt.

REPLACED BY — Act. Wt.

LIMIT ON DIMENSIONS UNLESS OTHERWISE SPECIFIED ± — SCALE

STAMP PART NUMBER WHERE SHOWN

BLUEPRINT

PART NO	STOCK	MATERIAL	SPEC.	LH REQ -0	RH REQ -0	LH REQ -2	RH REQ -2	LH REQ -3	RH REQ -3	LH REQ -4	RH REQ -4	LH REQ -5	RH REQ -5
PARTS LIST PER ASSY.													

			DRAFT	CHECK	STRUCT	MAT	APPROV	ENG
A.C.		STEWART						
NAVY		7-8-43						
HEAT TREAT	FINISH							

NAME DIAGRAM-FUEL SYSTEM — OPP. HAND

CONSOLIDATED VULTEE AIRCRAFT CORP. SAN DIEGO DIVISION . . . SAN DIEGO, CALIF.

DWG D SIZE 28G5002

LET	ALTERATION	DATE	BY
A	PARKER GLOBE VALVE MOD PER DWG 1-2040-8 CHG A	9-26-41	[illegible]
B	NOTE ADDED TO REQ'D VALVE	4-30-41	[illegible]
C	ADDED 1/16 DIA. HOLE TO BASE OF HANDLE ON FACE.	8-6-41	[illegible]
D	ON FACE/DWG & SHT ADDED: "OR DOLE VALVE NO. Q-1881-GV."	9-30-42	USE-[illegible]
E	IN ACCORD WITH ENGR. LIMITED -A/R NO. 206.3000 TO C.70496, 77713, 88476 ONLY FOR PBY-5A. & C.70496 & 91876 "1 TO 345, FOR PBY-5. ADDED -4/R NO. 2865442 FOR PBY-5 C. 2[illegible] & PBY-5A C. NOS. (1) 4[illegible] NO. 91876 [illegible]	[illegible]	[illegible]

E.O. A 1257 → PBY-5, 5A, OA-10, 28-5 (ALL) E.O. A11126A

NCR 190A

1/16 DIA. 4 HOLES ©

PARKER GLOBE VALVE SIZE 16
Ⓐ STYLE YGVGG6
(DWG 1-2040-8 CHG-A)
OR
DOLE VALVE NO. Q-1881-GV ⓓ

⑥ 24ST PLATE
FIN. Z-P-2AP

AC503-416-8 SCREW
AC995-S-51-6
Q7008-AL17-064

28G1041-5 ELBOW
USE THREADLUBE GPE OR EQUIV.

ANGLE AS SHOWN ON 2865012 L
" OPPOSITE " 2865012 R

21°

DRILL #18 (.169) 6 HOLES
HOLES IN EACH GROUP
TO BE EQUALLY SPACED

(4 PLACES) 1 1/8 R

2

4

2 1/8

6 13/16

45°

NOTE:
Ⓑ VALVE USED ON
PBY-1,-2,-3,-4 SPARES ALSO

FINISH CODE	
Z	ANODIC TREATMENT
P	P-27 PRIMER
AP	ALUMINIZED PRIMER
C	CADMIUM PLATE

ASSY DASH No.	MODEL	NEXT ASSY	REQ'D
L/R	PBY-5A	2865442	1 EA
L/R	PBY-5	2865442	1 EA
L/R	28-5MC	2865818	1 EA
L/R	28-AMC	2865818	1 EA
L/R	28-5MN	"	1 EA
L/R	28-5ME	"	1 EA
L/R	28-5MA	2865813	1 EA
L/R	28-5AMN	2865818	1 EA
L/R	PBY-5A	2863000	1 EA
L/R	PBY-5B	2863000	1 EA
R	PBY-5	2863000	1
L	PBY-5	2863000	1

70496, 77713, 88476 ONLY

70496 & 91876 "1-345

NOTE (NOS. (5) 464 91876 346 & ON.

REQUIREMENTS PER AIRPLANE

REPLACES

REPLACED BY

CALC. WT.

ACT. WT.

SCALE 12" = 1'-0"

STAMP PART NUMBER WHERE SHOWN

PART No.	STOCK	MATERIAL	SPEC.	LH REQ.	RH REQ.	LH REQ.	RH REQ.	LH REQ.	RH REQ.	LH REQ.	RH REQ.	LH REQ.	RH REQ.
				-0		-2		-3		-4		-5	
DOLE VALVE NO. Q-1881-GV OR PARKER GLOBE VALVE SIZE 16 STYLE YGVGG				1	1								
AC995-S-51-6				2	2								
AN503-416-8				4	4								
Q7008-AL17-064				4	4								
28G1041-5 ELBOW				1	1								
2865012-3 .051 x 4 1/2 x 7		AL. AL 245T 4	AN0-T	1	1								

PARTS LIST PER ASSY.

A.C.					
HEAT TREAT NONE	FINISH NOTED				
NAME VALVE ASSEM. FUEL TANK DRAIN				ORD. HAND 2865012-R	
CONSOLIDATED AIRCRAFT CORP. San Diego, Calif.				SIZE D	2865012

2105982 R

LET.	ALTERATION	DATE	BY
A	STABILIZING SPOKES REMOVED	2-28-42	CBG

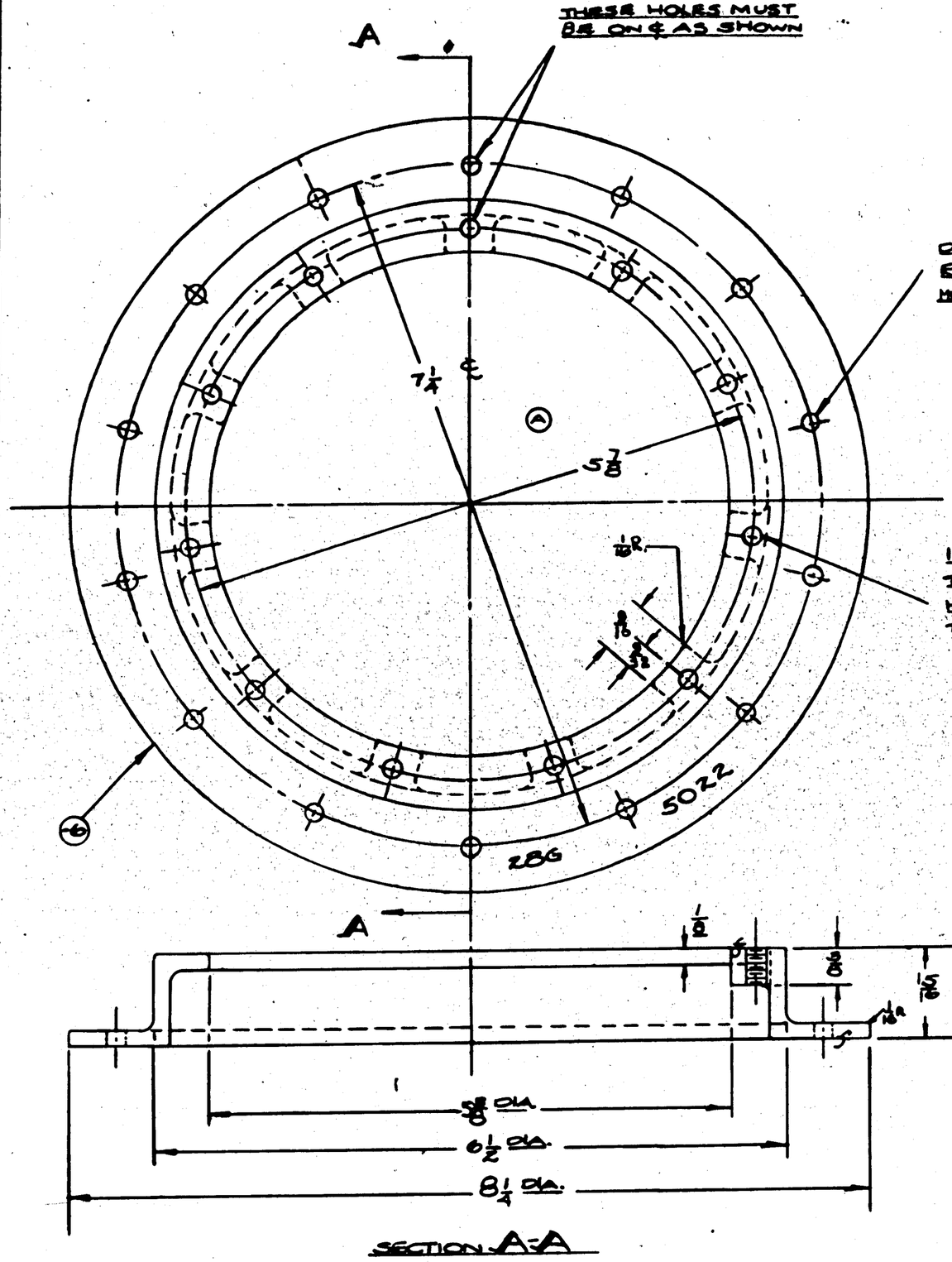

SECTION A-A

NOTE:
1. BREAK EDGES 1/32
WALLS 5/32 THICK
FILLET RADII 1/32
2 THIS CASTING IS USED IN CONTACT WITH GASOLINE. MUST BE LEAK-PROOF UNDER 4 #/in²

ASSY. DASH No.	MODEL	NEXT ASSY.	REQ.
	PBY-5A	28G5145	2
	PBY-5A	28G5145	2
	28-5M2	28G5211	2
	PBY-5	28G5021	2

#36 ℄ ON

REQUIREMENTS PER AIRPLANE

REPLACES — CALC. WT.

REPLACED BY — ACT. WT.

LIMIT OR ENGINEERING TOLERANCE UNLESS OTHERWISE SPECIFIED: ± 1/32

SCALE 12" = 1'-0"

STAMP PART NUMBER WHERE SHOWN

PART No.	STOCK	MATERIAL	SPEC.	LH REQ.	RH REQ.	LH REQ.	RH REQ.	LH REQ.	RH REQ.	LH REQ.	RH REQ.	LH REQ.	RH REQ.
28G5022-6	CASTING	L. ALLOY	GRADE CLASS 4									-0	-2

PARTS LIST PER ASSY.

NOTE:
INSTALLED WITH SELF SEALING BAGS

FINISH CODE	
Z	ANODIC TREATMENT
P	P-27 PRIMER
AP	ALUMINIZED PRIMER
C	CADMIUM PLATE

AC
NAVY NAF SAGA
HEAT TREAT — Z-P — FINISH

DRAFT: 3-16-42 | CHECK | STRUCT. | MAT | APPROV | ENG

NAME NECK-FILLER-SELF SEALING CELL

OPP. HAND —

CONSOLIDATED AIRCRAFT CORP., SAN DIEGO, CALIF.

DWG SIZE D

28G5022

R

LET	ALTERATION	DATE	BY
A	ADDED NEW NEXT ASSY. 28WKD43 FOR PBY-5 W/- #37 INCL. CHANGE MODELS EFFECTED FOR NEXT ASSY. 28WD005 TO #28 AND ON. (WAS #36 & ON)		
B	-6(1) REQ. WAS -6(1) L.H. -6(1) R.H. -7(1) REQ. WAS -7(1) L.H. -7(1) R.H. IN REQ/PLANE PBY-5(1) WAS (2) (PBY-5A(1) WAS (2). NO WT. CHG.	7-28-40	

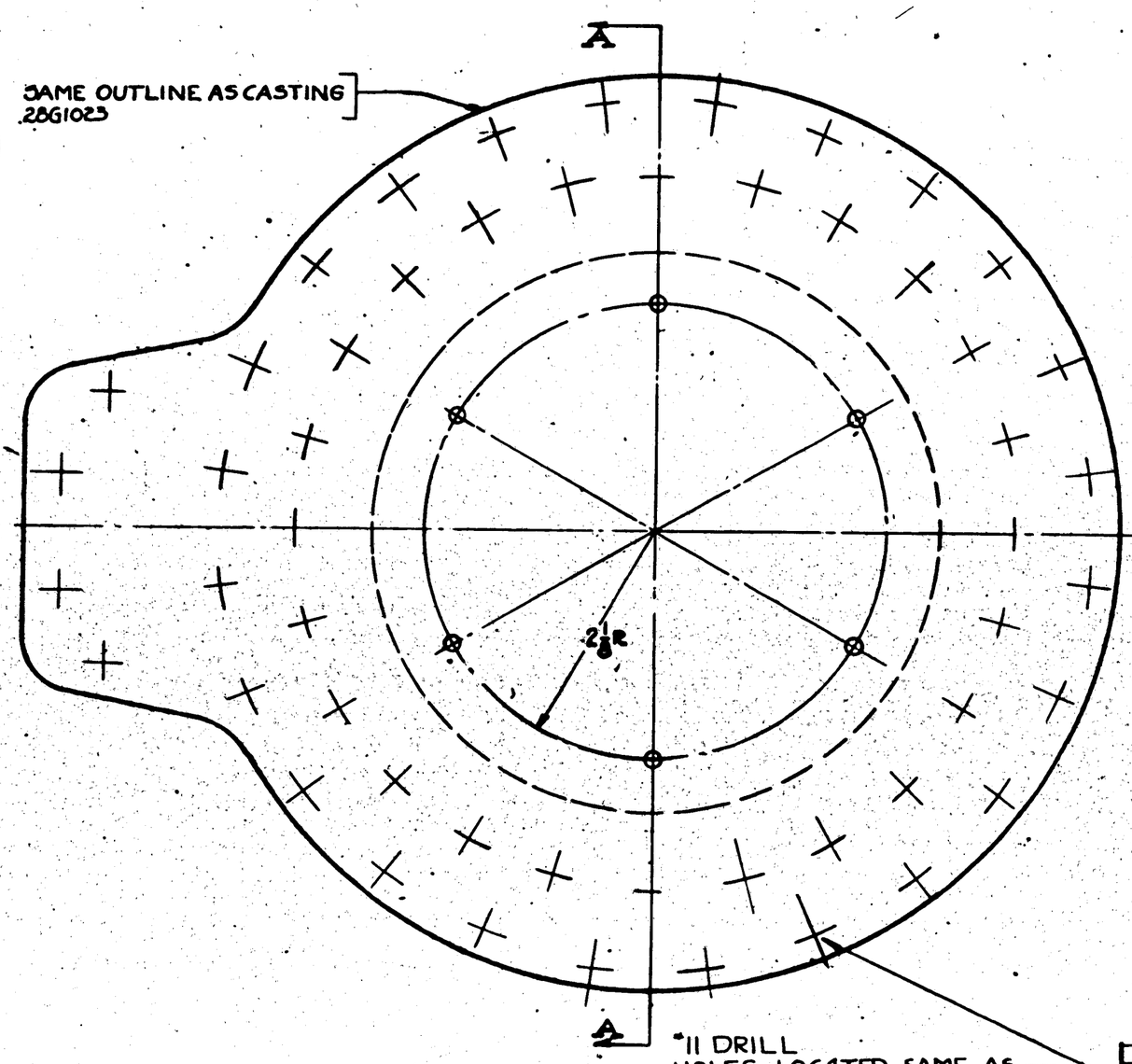

*11 DRILL HOLES LOCATED SAME AS IN DUMP VALVE FRAME 28G1023

* TOOL DEPT NOTE
JIG ENTIRE ASSEM TO BE INTERCHANGEABLE WITH DUMP VALVE (INSTALLATION 28G1011 ON WING)

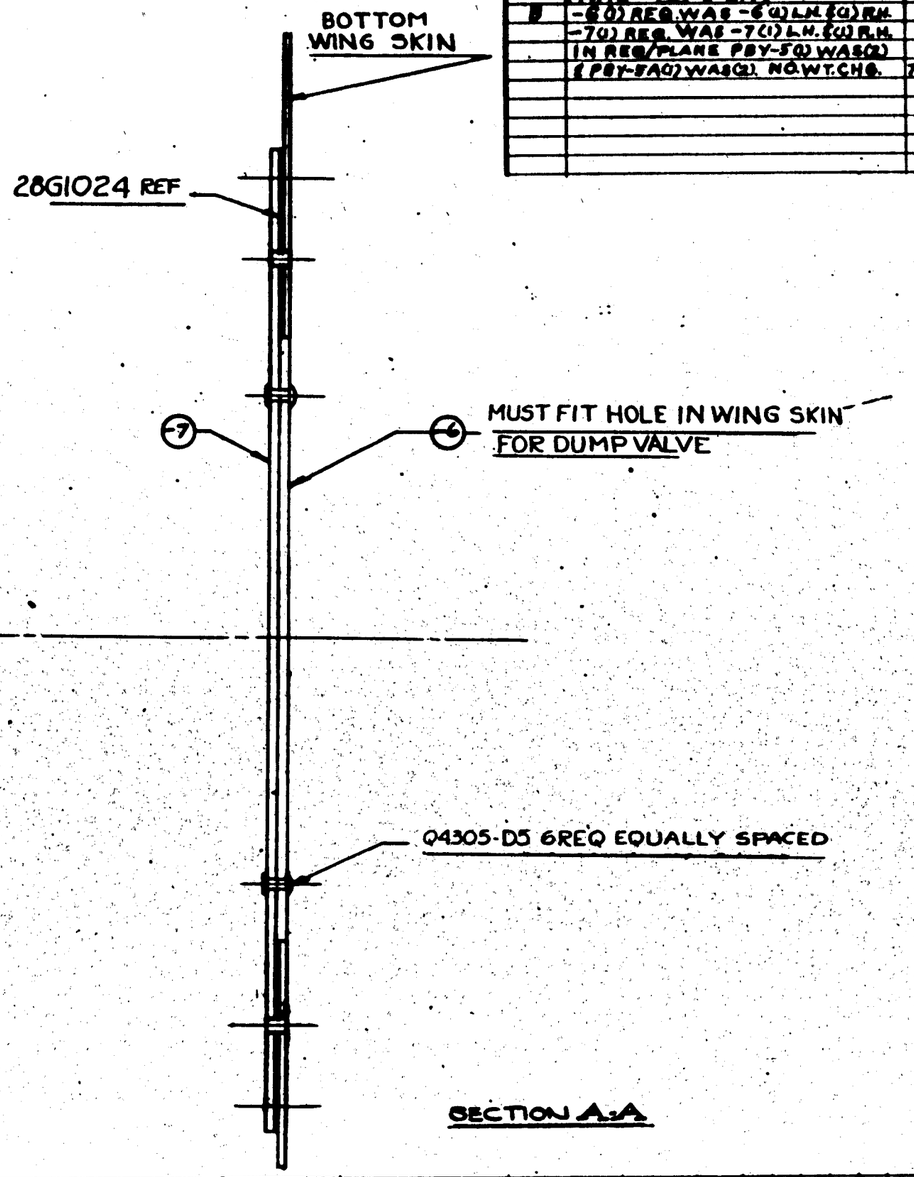

SECTION A-A

ASSY. DASH NO.	MODEL	NEXT ASSY.	REQ'D
	PBY-5A	28W5005	1
	PBY-5B	28W5005	2
④ "284 ON →	PBY-5	28W5005	1
"1 TO 27 →	PBY-5	28WED43	1

④ "284 ON
"1 TO 27

Q4305-D5

PART No.	STOCK	MATERIAL	SPEC.	LH REQ.	RH REQ.	LH REQ.	RH REQ.	LH REQ.	RH REQ.	LH REQ.	RH REQ.
	-7 .072 x 8 5/8 x 10 1/4	ALCLAD	47A8 CONDT	1							
28G5036	-6 .081 x 8 5/8 x 5 3/8	ALCLAD	47A8 CONDT	1							

REQUIREMENTS PER AIRPLANE

PARTS LIST PER ASSY.

REPLACED
REPLACED BY
Engg. Wt.
Act. Wt.
SCALE 12" = 1'-0"

AC
NAVY —
HEAT TREAT
FINISH
DRAFT 8-7-40
CHECK
STRUCT.
MAT
APPROV.
ENG.

NAME COVER-DUMP VALVE OPENNING-SELF SEALING FUEL CELLS-WING

CONSOLIDATED AIRCRAFT CORP. SAN DIEGO, CALIF.

OPP. HAND —

SIZE D

28G5036

PBY-5, PBY-5A, OA-10, 28-5ME, MN, MA

E.O. # 30579
PBY-5, PBY-5A
JA-10, 28-5ME, MN, MA

LET	ALTERATION	DATE	BY
A	DIMS. 3/4, 5 3/16, 8 5/16, 5 3/4 & 3/4 DIAS		
	5/8, 6 5/8, 12 1/8 & 18 FORMERLY	5-5-41	
	-7(3) & -6(1) WAS ADDED TO EA. IN ASSY.		
B	CHANGE -6 TO -6L & -6R (OPP)	6-8-41	
C	ADDED AGC 5052-7 CLIP	1-1-41	
	REMOVED ALL DRILL NOTES & HOLES		
D	REDESIGNED SO THAT SAME GUARD IS USABLE FOR EITHER R & L WING. - GENERALLY RE-ARRANGED & RE-DIMENSIONED TO EQUALLY SPACE -7 CLIPS & REVERSE DIRECTION OF FLG. ADDED -9 & -9	12-5-41	
E	SPOTWELD 6 PLACES W.O.S. 8 PLACES CHG'D. SYMBOL & WT. CHG. MTG.	2-24-42	

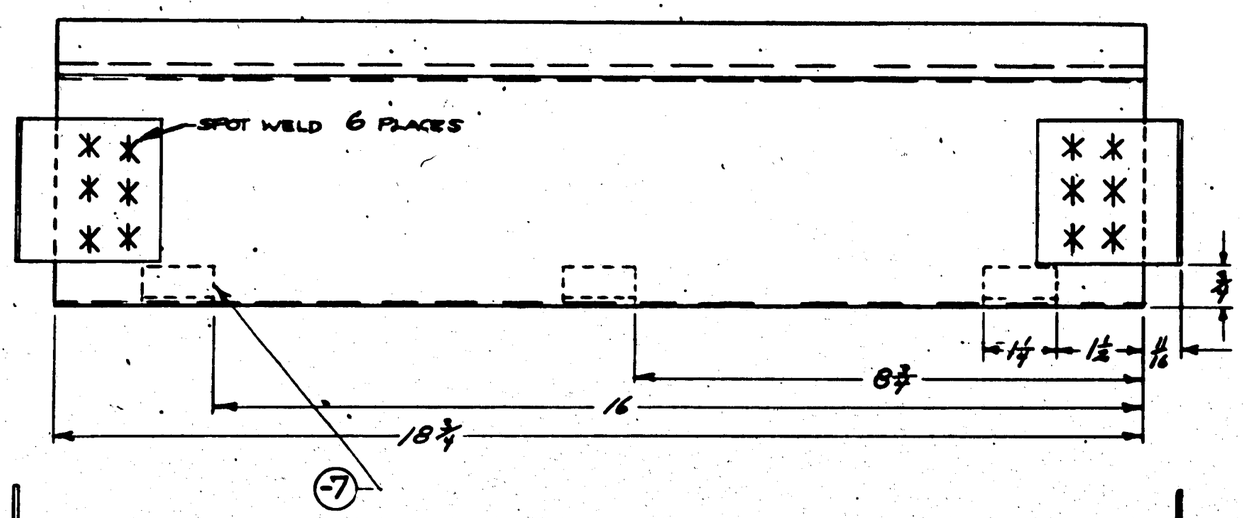

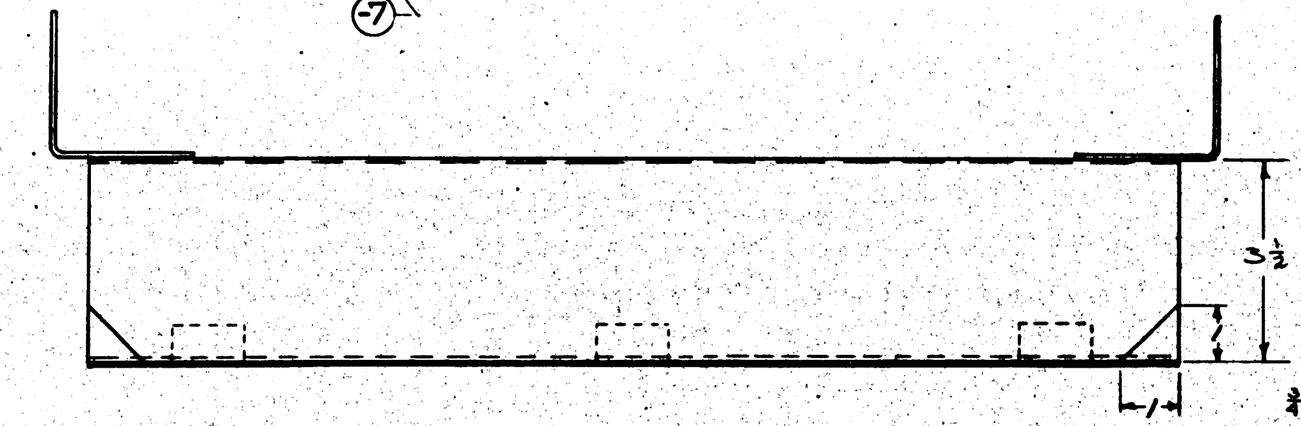

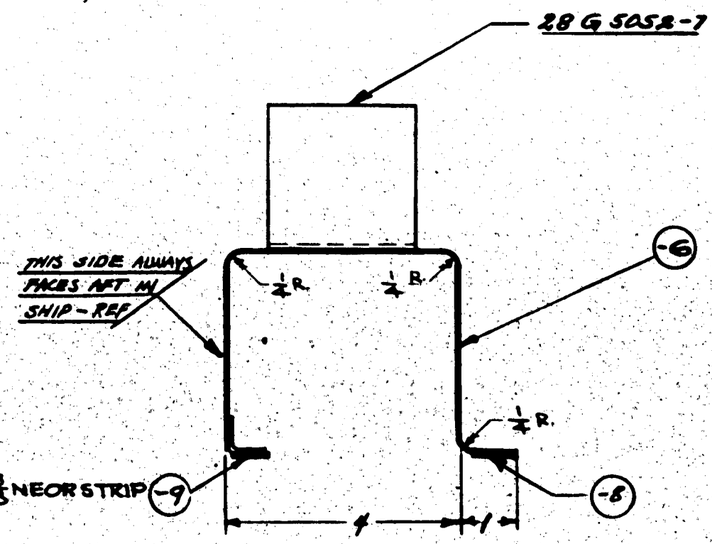

ASSY. DASH NO.	MODEL	NEXT ASSY.	REQ.
28-5MN	28G5040		8
28-5NA	"		3
28-5NL	"		8
PBY-5A	"		8
PBY-5	"		8

REQUIREMENTS PER AIRPLANE

REPLACES — 1.15 # CALC. WT.

REPLACED BY — ACT. WT.

LIGHT OR ENGINEERING UNLESS OTHERWISE SPECIFIED: ± 1/32

SCALE 6" = 1'-0"

STAMP PART NUMBER WHERE SHOWN

PART NO.	STOCK	MATERIAL	SPEC.	-0 LH	-0 RH	-2 LH	-2 RH	-3 LH	-3 RH	-4 LH	-4 RH	-5 LH	-5 RH
				REQ.		REQ.		REQ.		REQ.		REQ.	
(2) 28G 5052-7	CLIP			2									
-9	1/32 x 3/4 x 1 3/8	NEOPRENE	N-11	3									
-8	1/32 x 3/4 x 10 3/8	"	"	1									
-7	Y-2-A 18T x 1 1/4	AC 2457	4748-T	3									
-6	.040 x 12 1/8 x 18 3/8	AC 2457	4748-T	1									

PARTS LIST PER ASSY.

AC			U.S. ENGINEER	6-6-41			
NAVY NONE		HS-41	B		6-10-41		
HEAT TREAT	FINISH	DRAFT	CHECK	STRUCT.	MAT	APPROV.	ENG.

NAME: GUARD - SIGHT GAUGE - REAR - WING

OPP. HAND

CONSOLIDATED AIRCRAFT CORP. SAN DIEGO, CALIF.

ENGR. D

28G5031

RIVET SYMBOLS

PBY-5, 5A, OMO
28-5ME, MAG MN

LET	ALTERATION	DATE	BY
A	20 1/8 WAS 21 OVERALL DIM.	2-8-41	[illegible]
B	CHG'D PRINTS FROM -L & -R TO 28G5052 & AT "OPP HAND" REMOVED 28G5052-R	7-10-41	[illegible]
C	ADDED -7 CLIP - REMOVED DRILL NOTE & LOCATING DIM. FOR HOLES	8-2-41	[illegible]
D	ADDED — INSTALLATION REF. NOTE & MISSING VIEW OF (B) ON END VIEW OF GUARD. & ADDED PART STRIP (-8)	12-13-41	BAKER
E	NOTE SPOTWELD 6 PLACES & SYMBOLS WERE ADDED (2). REMOVED LOCT'S. DIMS. ALT. CHG. NEG.	3-24-42	[illegible]

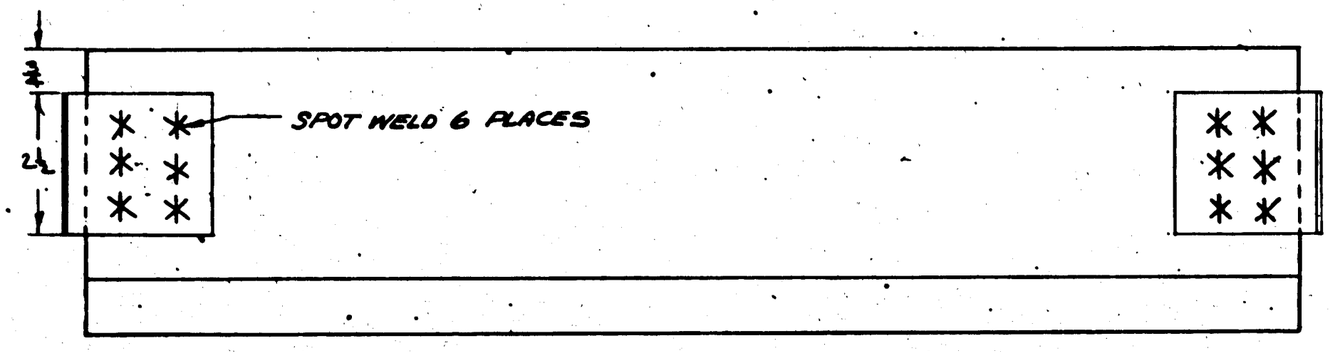

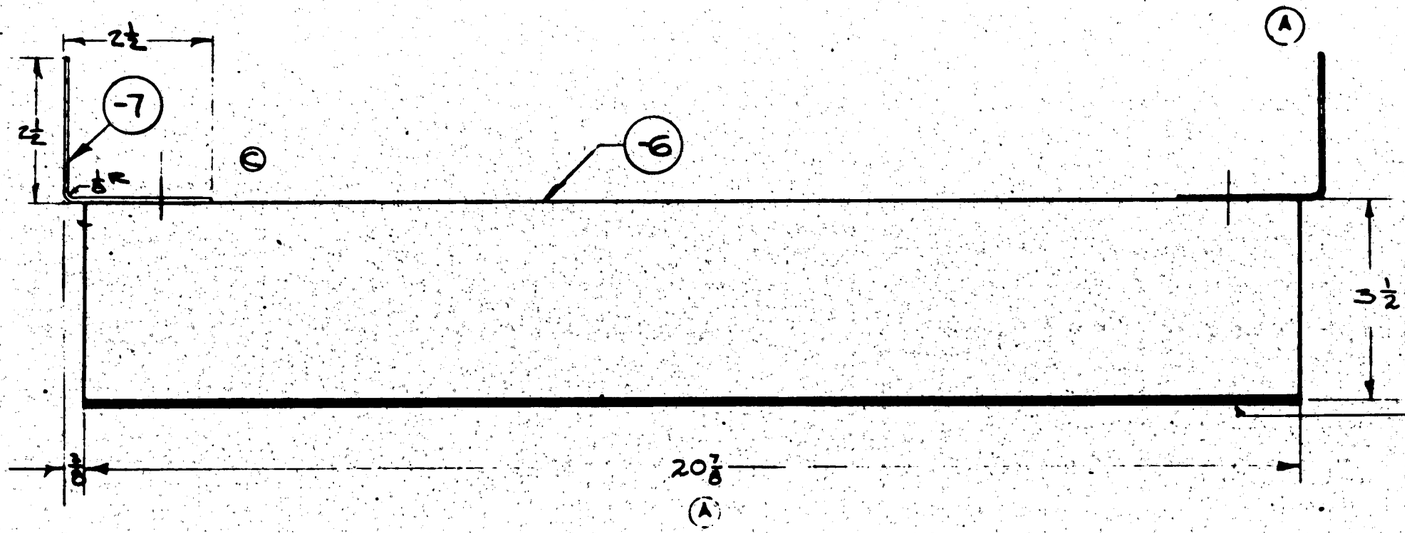

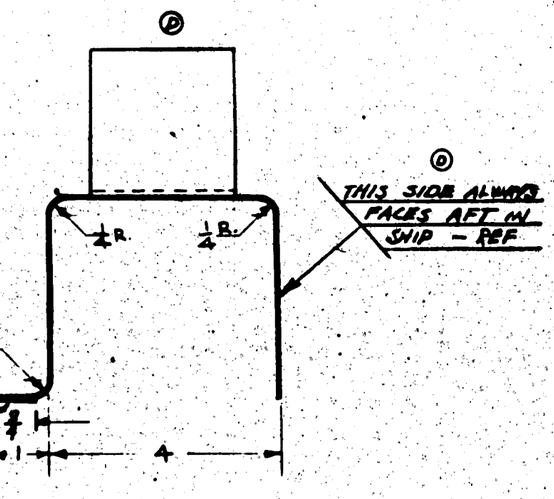

-7	PBY-5A	28G5051	6
	28-5MMN	28G5040	2
	28-5MN	28G5040	2
	28-5MA		2
	28-5ME		2
	PBY-5A		2
	PBY-5	28G5040	2

ASSY. DASH NO.	MODEL	NEXT ASSY.	REQ'D

REQUIREMENTS PER AIRPLANE

REPLACES — CALC WT.

REPLACED BY — ACT. WT.

UNLESS OTHERWISE SPECIFIED ± 1/32 — SCALE 6" = 1'-0"

STAMP PART NUMBER WHERE SHOWN

PART NO.	STOCK	MATERIAL	SPEC.	LH REQ. -0	RH REQ. -2	LH REQ. -3	RH REQ. -4	LH REQ. -5	RH REQ.
B	-8 1/16 X 3/4 X 21	NEOPRENE	N-11	1					
C	-7 .040 X 12 1/16 X 5 1/8	ALC 24ST	47A8-T	2					
	-8 .040 X 12 1/16 X 21 3/8	ALC. 24ST	47A8-T	1					

PARTS LIST PER ASSY.

AC — NAVY NONE — HEAT TREAT — FINISH

MARSDEN — DRAFT 1-1941 — CHECK — STRUCT. — MAT — APPROV. — ENG.

NAME GUARD - SIGHT GAUGE - FRONT - WING

CONSOLIDATED AIRCRAFT CORP. SAN DIEGO, CALIF.

OPP. HAND

DWG. SIZE D — 28G5052

LET	ALTERATION	DRWN	CK

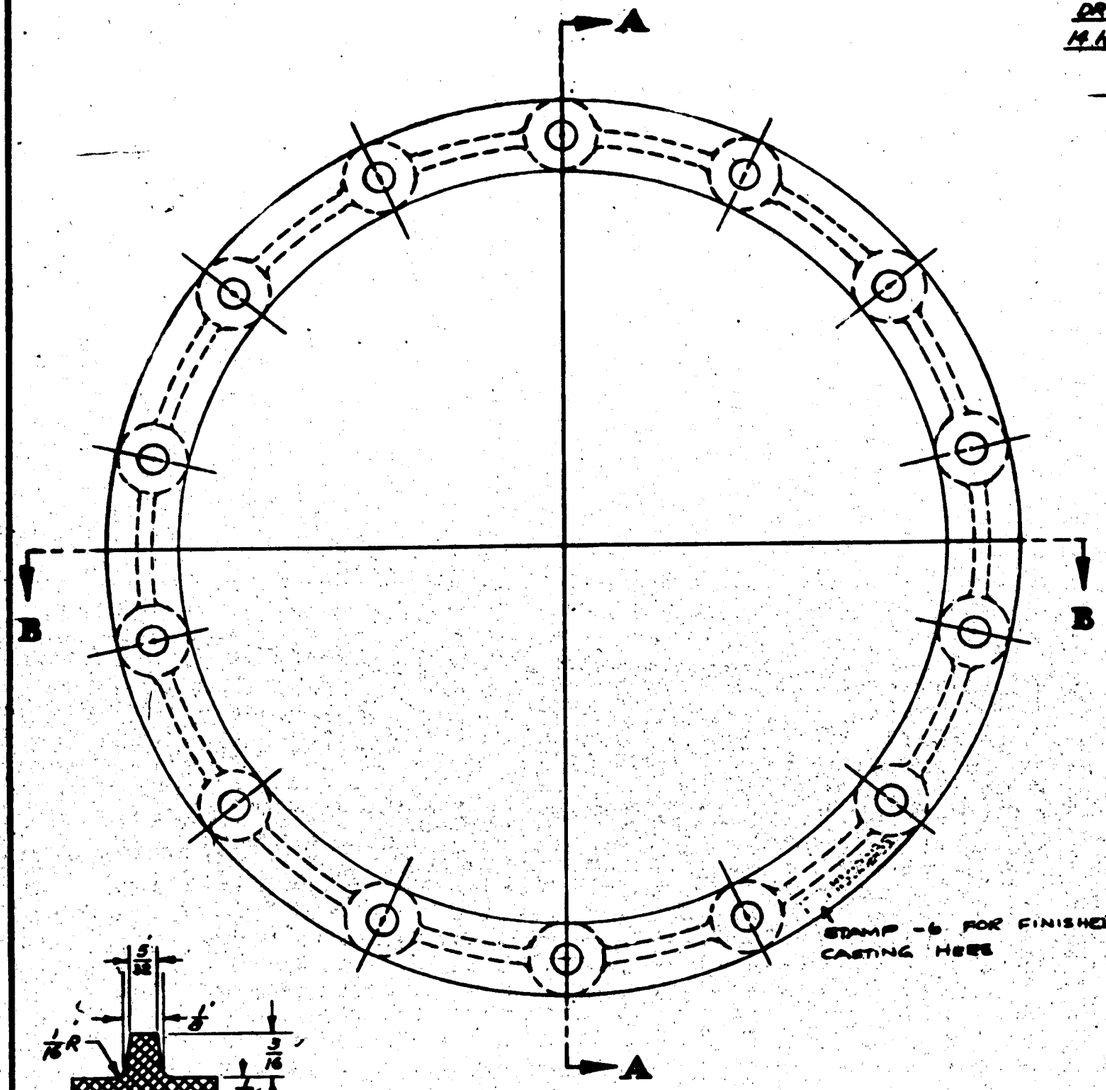

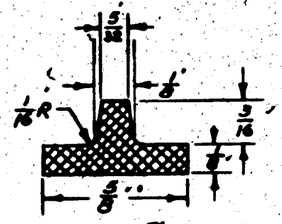

DETAIL C
DOUBLE SIZE

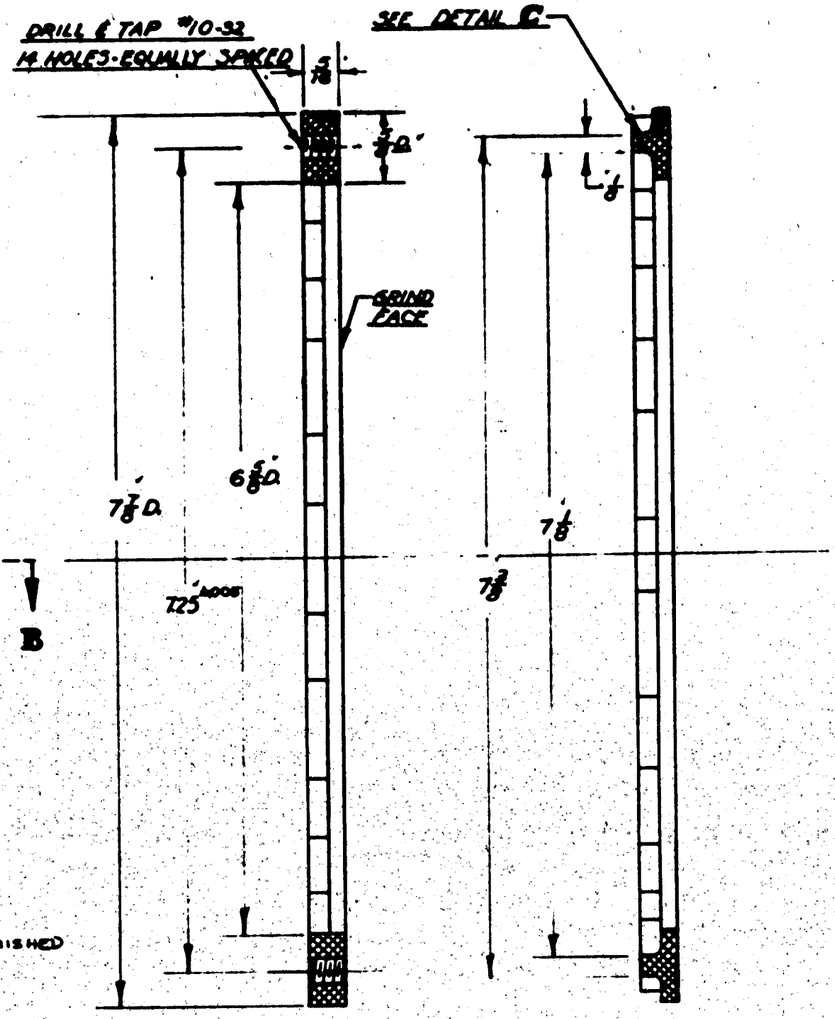

SECTION A-A

SECTION B-B

NOTES:- (1) THIS DWG TRACED FROM DWG #2F1-2-164 FURNISHED BY GOODYEAR.

(2) THIS PART FURNISHED & INSTALLED ON FUEL CELLS BY GOODYEAR.

PBY-5A	2865082	2	
PBY-5	2865082	2	
4 DIGIT DASH No.	MODEL	NEXT ASSY.	REQ.

REQUIREMENTS PER AIRPLANE

REPLACES — GRAD. WT.

REPLACED BY — AGT. WT.

SCALE 12" = 1'0"

STAMP PART NUMBER WHERE SHOWN

-6 FINISHED CASTING
& SAND CASTING #538 ✓6

PART No.	STOCK	MATERIAL	SPEC.	LH RH REQ.	LH RH REQ.	LH RH REQ.	LH RH REQ.	LH RH REQ.
PARTS LIST PER ASSY.				-0	-2	-3	-4	-5

A-C								
NAVY NONE	NONE	10-3-41		11-28-41				
HEAT TREAT	FINISH	DRAFT	CHECK	STRUCT		SUPERV.	ENG.	

NAME RING-TAPPING FILLER NECK FUEL CELL #1

OPP. HAND

SIZE D

2865081

CONSOLIDATED AIRCRAFT CORP. San Diego, Calif.

LET	ALTERATION	DATE	BY

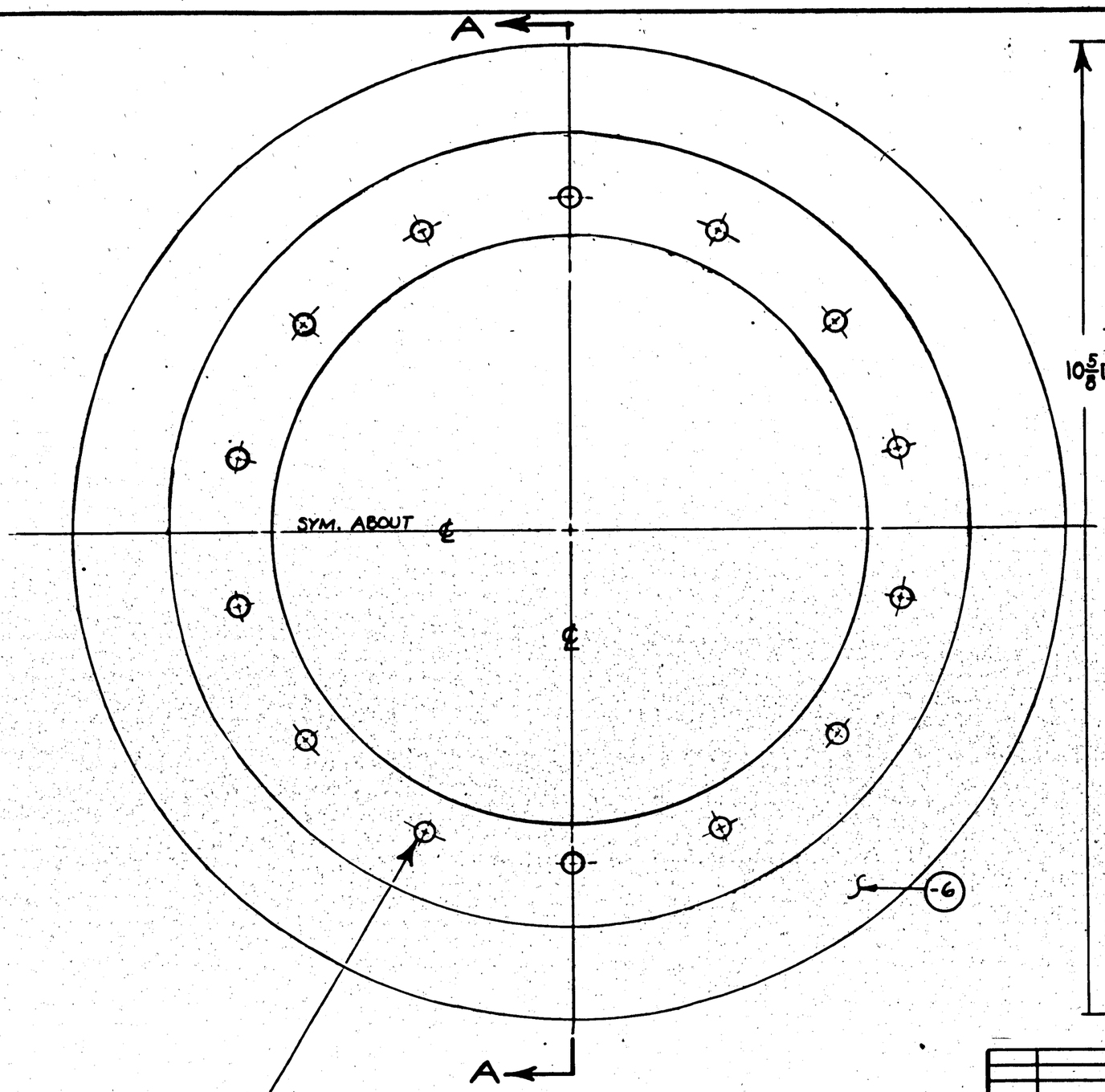

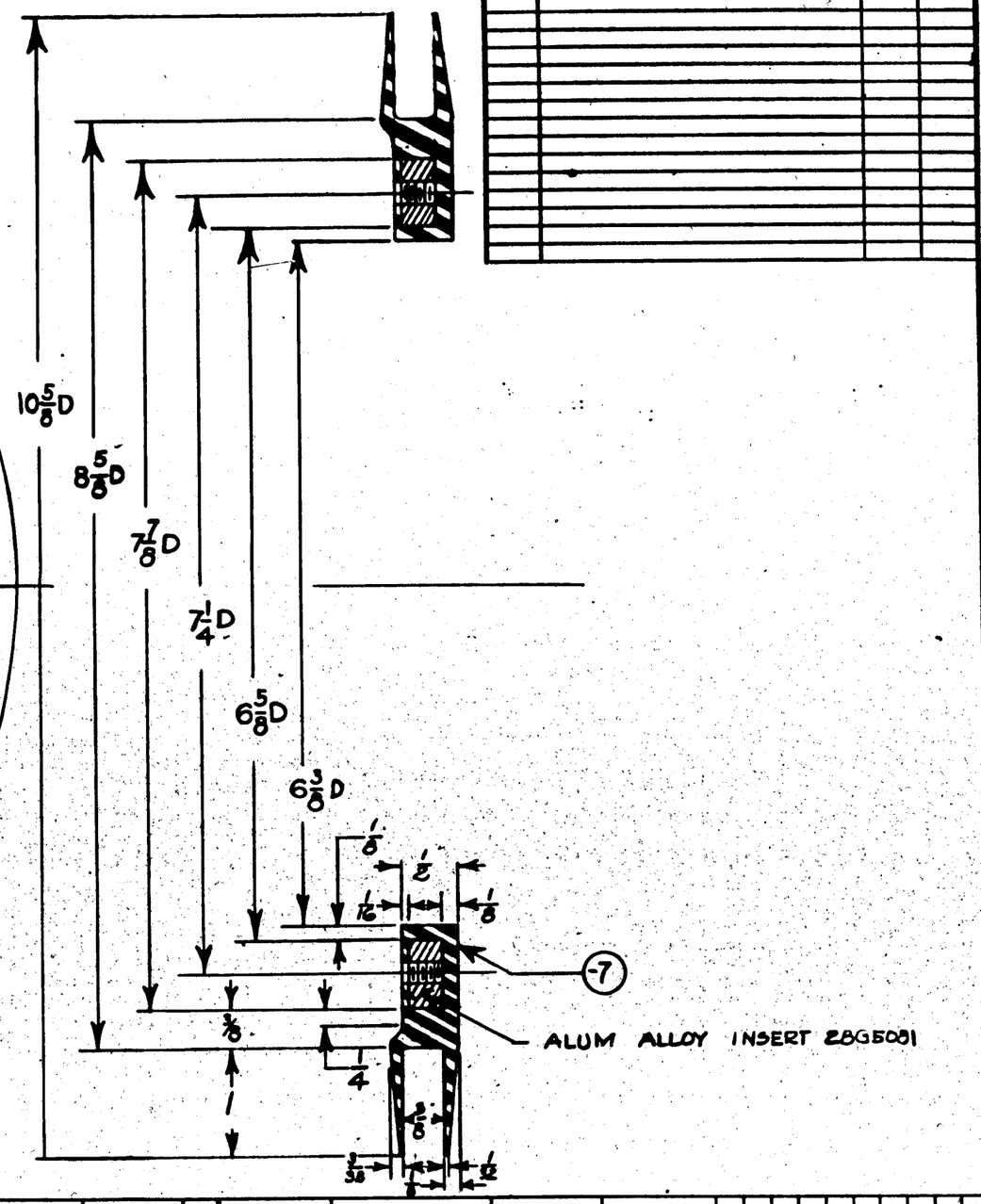

ASSY. DASH No.	MODEL	NEXT ASSY.	REQ.
	PBY-5A	28G5105	2
	PBY-5	28G5105	2

REQUIREMENTS PER AIRPLANE

REPLACES — Orig. Wt.

REPLACED BY — Adv. Wt.

SCALE 12"=1'-0"

± 1/32"

STAMP PART NUMBER WHERE SHOWN

PART No.	STOCK	MATERIAL	SPEC.	LH REQ.	RH REQ.	LH REQ.	RH REQ.	LH REQ.	RH REQ.	LH REQ.	RH REQ.	LH REQ.	RH REQ.
	PARTS LIST PER ASSY.			-0		-2		-3		-4		-5	
-7	MOLDED CHEMIGUM (GOODYEAR)			1									
28G5081	INSERT			1									
-6	SUB ASS'Y												
-8	SUB ASS'Y			1									

AC		GERBERT					
NAVY		10-6-41		1-28-42			
HEAT TREAT	FINISH	DRAFT	CHECK	STRUCT	MAT	APPROV	ENG.

NAME FITTING-FILLER NECK FUEL CELL #1

OPP. HAND

CONSOLIDATED AIRCRAFT CORP. SAN DIEGO, CALIF.

SIZE D — 28G5082

1. THIS DWG TRACED FROM DWG #2F1-2-94B FURNISHED BY GOODYEAR.
2. THESE PARTS FURNISHED AND INSTALLED ON THE FUEL CELLS BY GOODYEAR.

R

LET	ALTERATION	DATE	BY

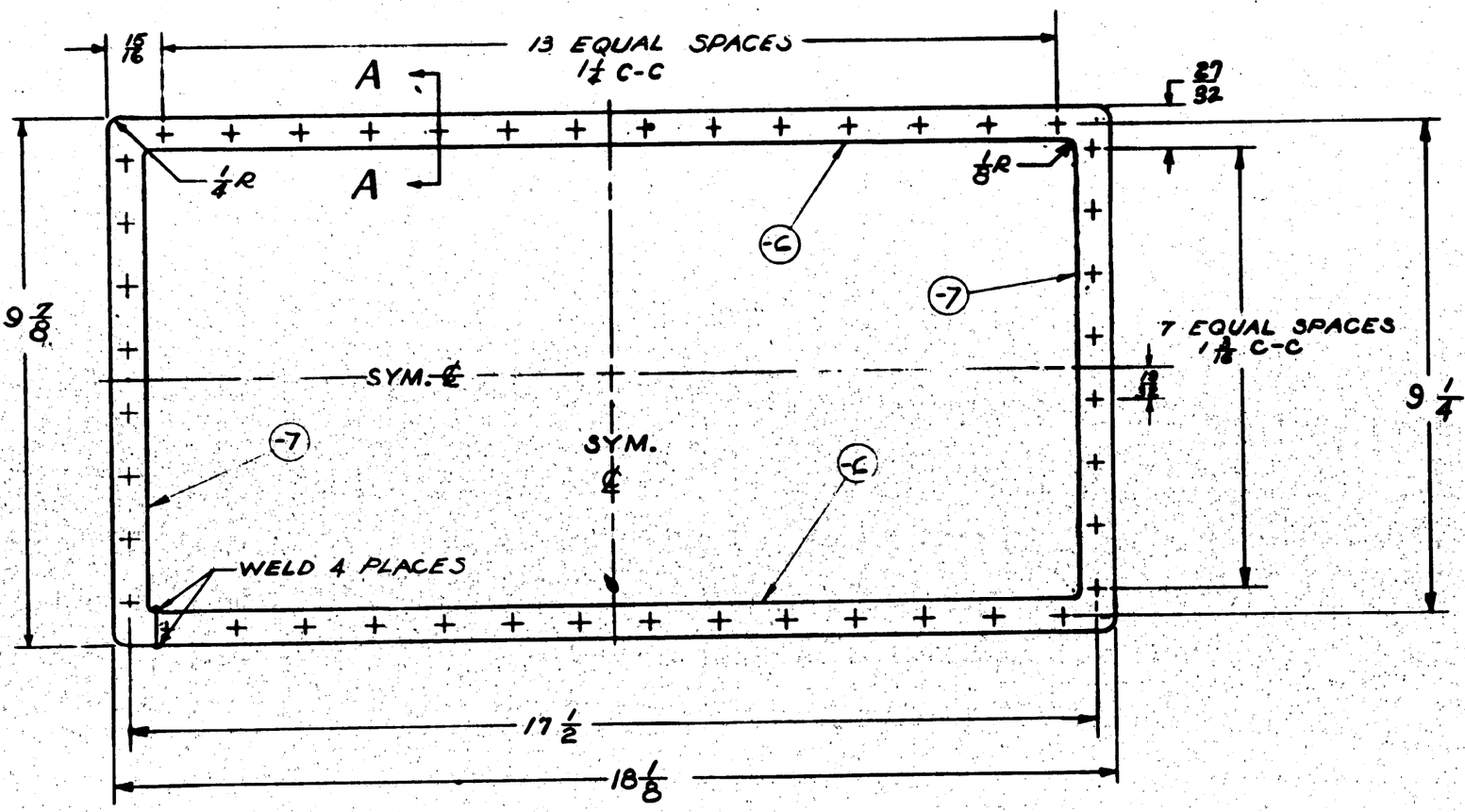

SECTION - A-A
SCALE 12"=1'-0"

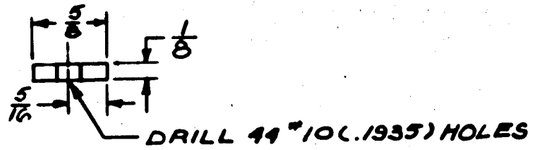

NOTE:
THIS PART IS FURNISHED & INSTALLED ON THE FUEL CELLS BY THE GOODYEAR CO.

ASSY. DASH NO.	MODEL	NEXT ASSY.	QTY.
	PBY-5A	28G5081	10
	PBY-5	28G5081	10

REQUIREMENTS PER AIRPLANE

REPLACES — CALC. WT.

REPLACED BY — ACT. WT.

SCALE 6"=1'-0"

STAMP PART NUMBER WHERE SHOWN

PART No.	STOCK	MATERIAL	SPEC.	LH REQ.	RH REQ.	LH REQ.	RH REQ.	LH REQ.	RH REQ.	LH REQ.	RH REQ.
	7/16X2X16	2S-½H AL	46A3 TEMP E	2							
	7/16X2X18	2S-½H AL	46A3 TEMP E		2						

PARTS LIST PER ASSY. -0 -2 -3 -4 -5

AC
NAVY NONE
HEAT TREAT

NONE
FINISH

DRAFT — MASTER — CHECK — STRUCT — ELEC — TUBING — ENG.

NAME FRAME - TAPPING INSPECTION COVER

OPP. HAND

CONSOLIDATED AIRCRAFT CORP. San Diego, Calif.

SIZE D — 28G5083

R

LET	ALTERATION	DATE	BY

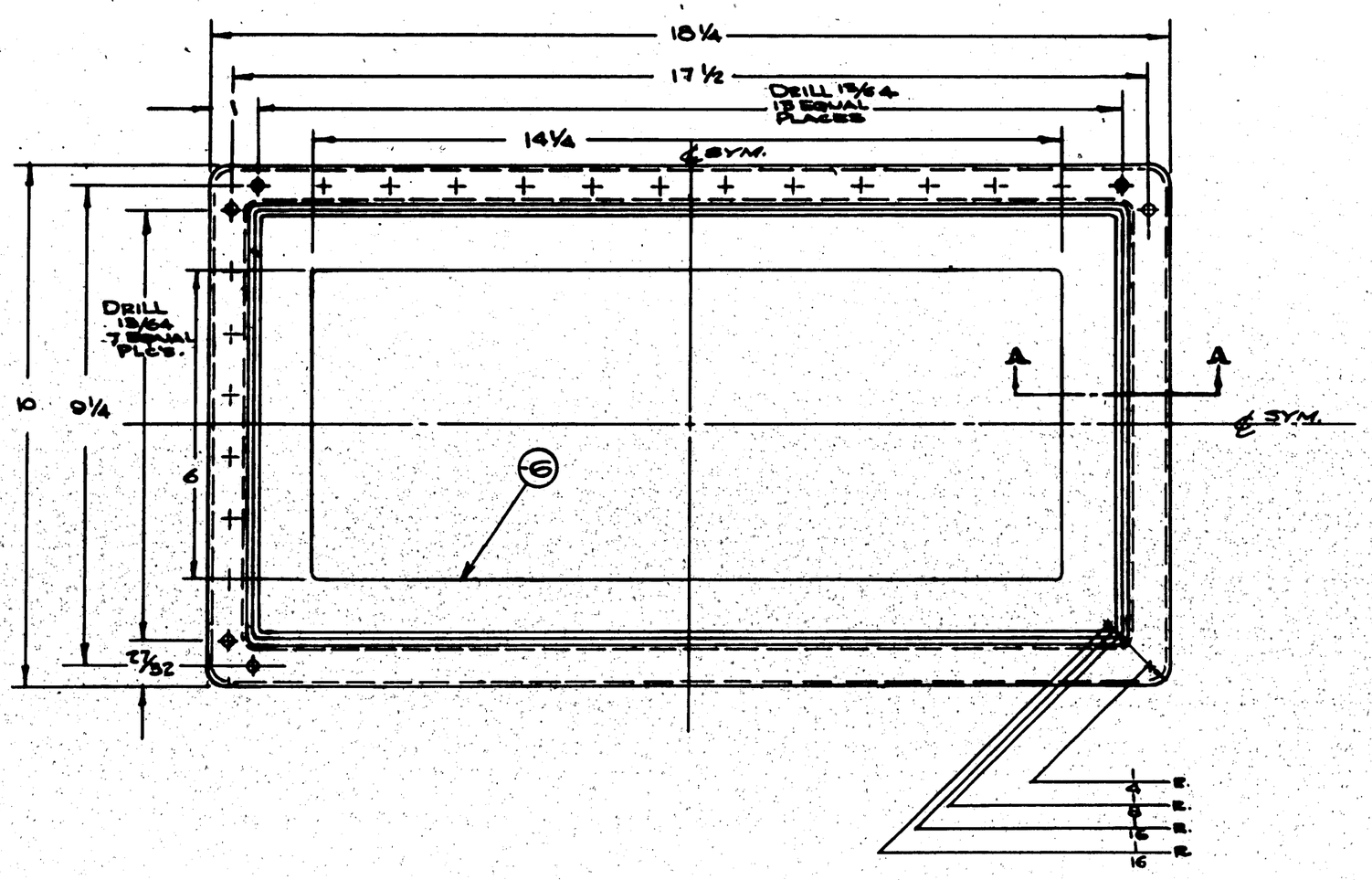

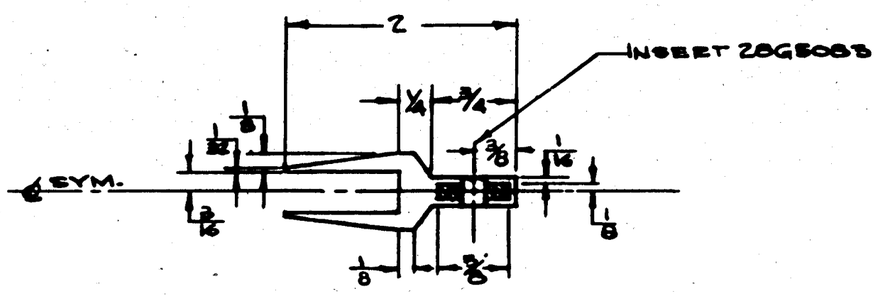

SECTION A-A TYPICAL
SCALE 12"=1.0"

1. THIS DRAWING TRACED FROM A DRAWING FURNISHED BY GOODYEAR.
2. THIS PART SUPPLIED AND INSTALLED ON THE FUEL CELLS BY GOODYEAR.

ASSY. DASH NO.	MODEL	NEXT ASSY.	REQ'D.
		28G5109	2
		28G5108	2
	PBY-5A	28G5106	2
	PBY-5	28G5105	2
		28G5107	2

REQUIREMENTS PER AIRPLANE

REPLACES

REPLACED BY

UNLESS OTHERWISE SPECIFIED ON INDIVIDUAL DRAWING ± 1/32

SCALE 6"=1'-0" AND NOTED

STAMP PART NUMBER WHERE SHOWN

GALS. WT.

ASY. WT.

PART NO.	STOCK	MATERIAL	SPEC.	LH REQ.	RH REQ.	LH REQ.	RH REQ.	LH REQ.	RH REQ.	LH REQ.	RH REQ.	LH REQ.	RH REQ.

LET	ALTERATION	DATE	BY

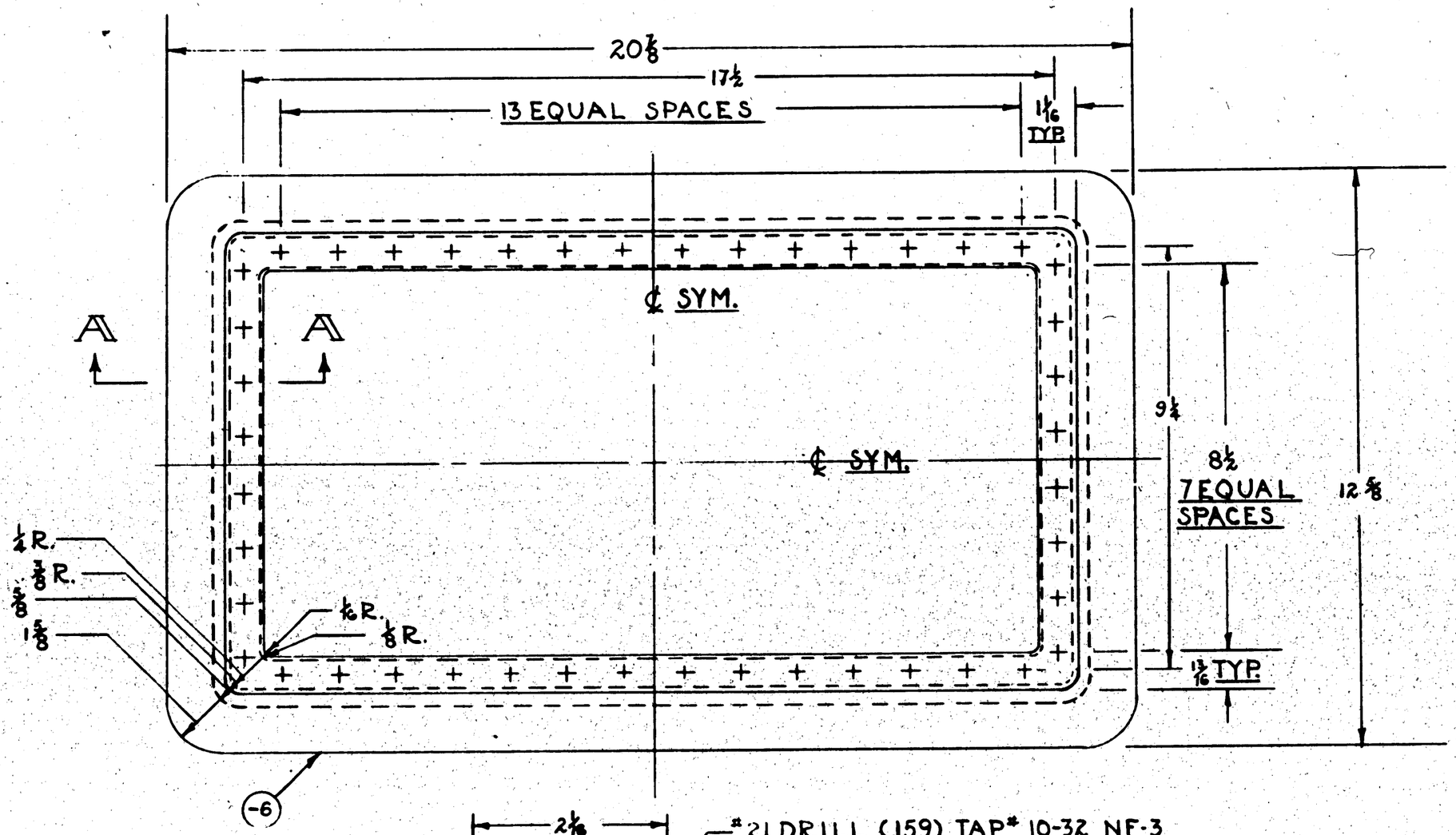

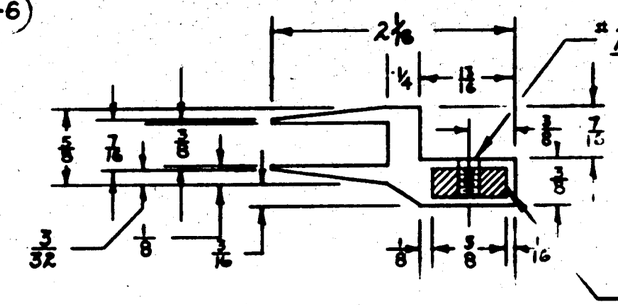

#21 DRILL (.159) TAP# 10-32 NF-3
44 HOLES

INSERT DWG.#
ALL RADII 1/32 R NOTED

SECTION A-A
SCALE 12"-1'-0"

THIS DRAWING TRACED FROM DRAWING#2F1-2-25-A FURNISHED BY GOODYEAR

THESE PARTS FURNISHED & INSTALLED ON THE FUEL CELLS BY GOODYEAR

ASSY. DASH NO.	MODEL	NEXT ASSY.	REQ.
	PBY-5	28G5109	2
	PBY-5A	28G5103	2
		28G5107	2
		28G5106	2
		28G5105	2

REQUIREMENTS PER AIRPLANE

REPLACES — GALC. WT.

REPLACED BY — ADV. WT.

SCALE 6" 1'-0"

STAMP PART NUMBER WHERE SHOWN

-6 INSERT MOLDED CHEMIGUM (GOODYEAR)

PART No.	STOCK	MATERIAL	SPEC.	LH REQ. -0	RH REQ. -0	LH REQ. -2	RH REQ. -2	LH REQ. -3	RH REQ. -3	LH REQ. -4	RH REQ. -4	LH REQ. -5	RH REQ. -5
-6													

PARTS LIST PER ASSY.

AC
NAVY NONE
HEAT TREAT — NONE — FINISH

DRAFT — CHECK — STRUCT — MAT — SUPERV — ENG

NAME FRAME ASSEMBLY
INSPECT. COVER FUEL CELLS
CONSOLIDATED AIRCRAFT CORP. SAN DIEGO, CALIF.

OPP. HAND

SIZE D — 28G5085

LET	ALTERATION	DATE	BY

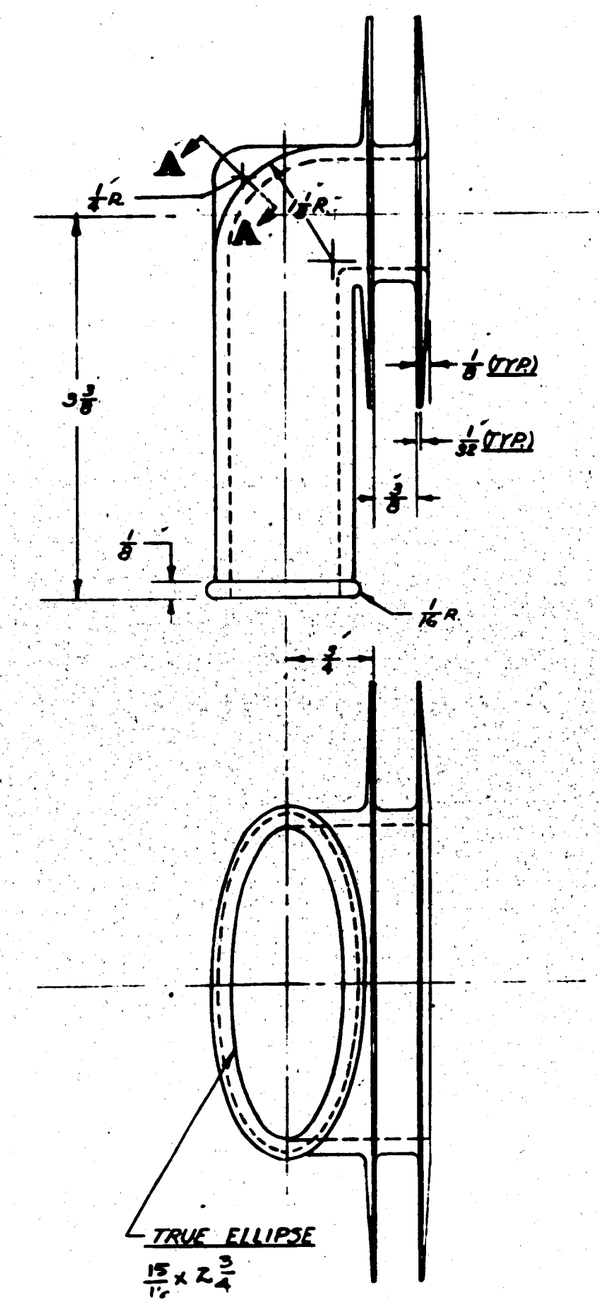

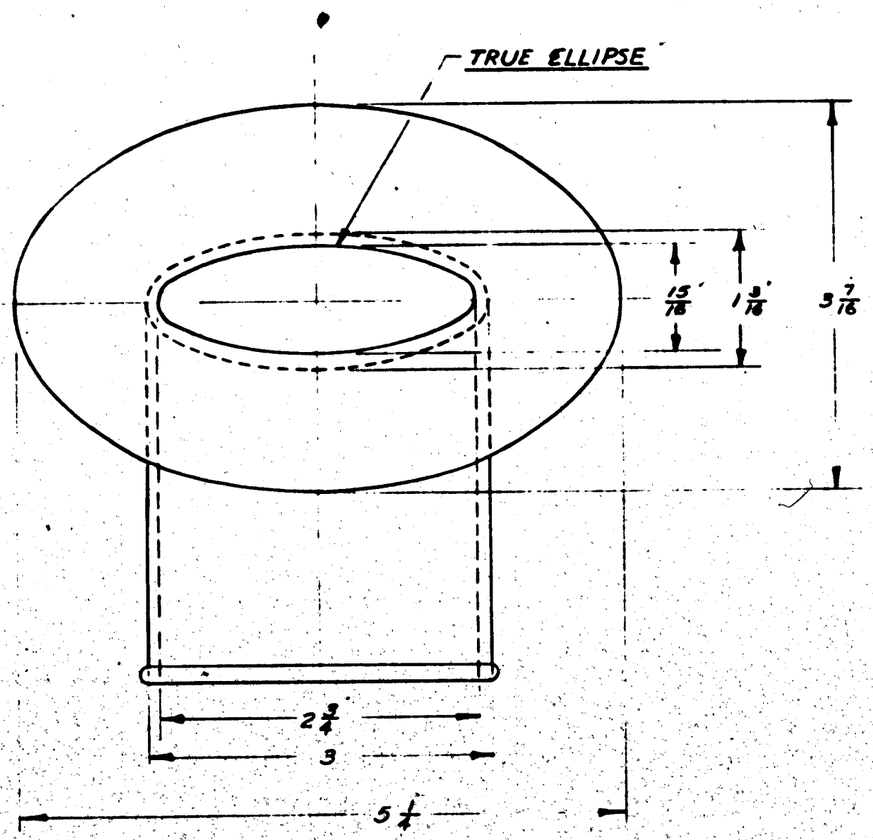

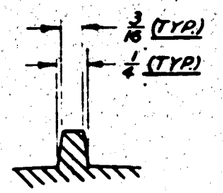

SECTION A-A (TYPICAL)

NOTES:- (1) ALL RADII 1/16 EXCEPT AS NOTED.

(2) THIS D'WG TRACED FROM D'WG # 2F1-2-92-A FURNISHED BY GOODYEAR.

(3) THIS PART SUPPLIED AND INSTALLED ON FUEL CELLS BY GOODYEAR.

ASSY. DASH NO.	MODEL	NEXT ASSY.	QTY.
		2865109	2
		2865108	4
		2865107	2
	P8Y-3A	2865106	2
	P8Y-3	2865105	6

REQUIREMENTS PER AIRPLANE

REPLACES — GALS. WT.

REPLACED BY — ASY. WT.

SCALE 12" : 1'-0"

STAMP PART NUMBER WHERE SHOWN

	PART No.	STOCK	MATERIAL	SPEC.	LH REQ.	RH REQ.	LH REQ.	RH REQ.	LH REQ.	RH REQ.	LH REQ.	RH REQ.	LH REQ.	RH REQ.
1		MOLDED CHEMIGUM	GOODYEAR											

PARTS LIST PER ASSY. -0 -2 -3 -4 -5

AC

NAVY NONE — HEAT TREAT

NONE — FINISH

VERSION 10-3-41

DRAFT — CHECK — STRUCT — MAT — APPROV — ENG.

NAME FITTING - MANIFOLD FUEL CELLS

OPP. HAND

SIZE D

28G5086

CONSOLIDATED AIRCRAFT CORP. SAN DIEGO, CALIF.

R

LET	ALTERATIONS	DATE	BY
C	TRACED NO WT. CHG.	10-14-41	
D	REMOVED NOTE "DRILL 1/2		
	& PLACES" NO WT. CHG.	10-14-41	

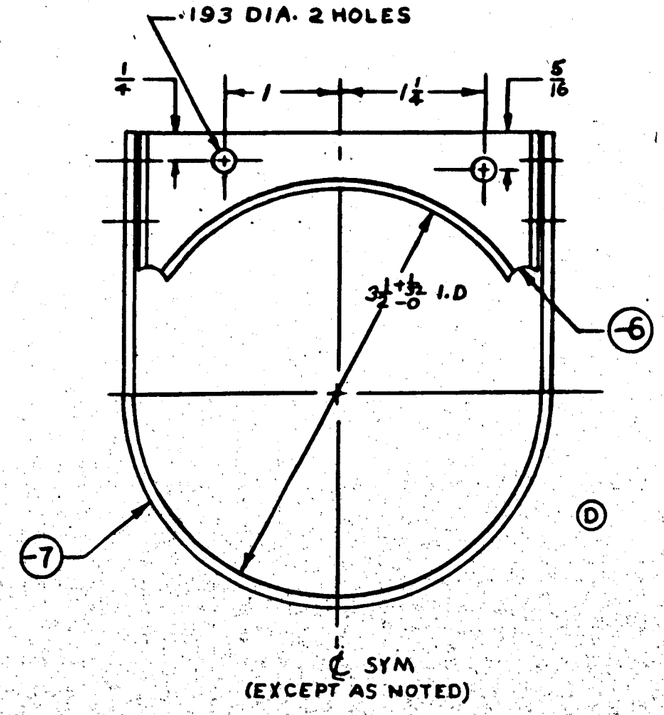

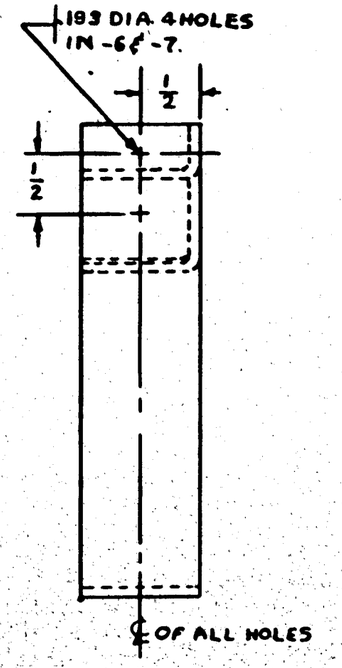

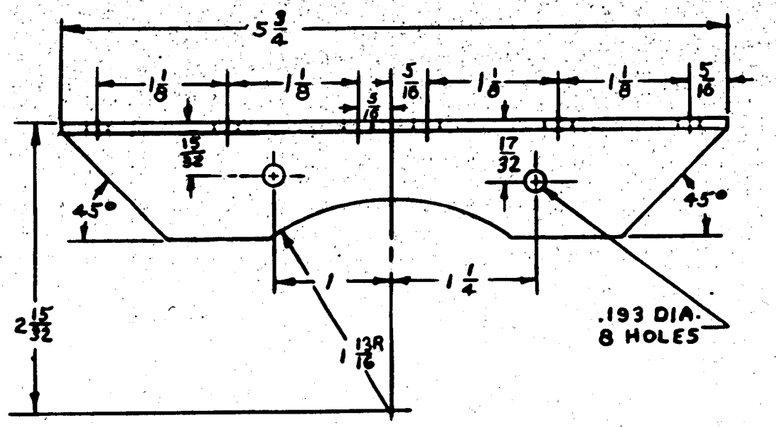

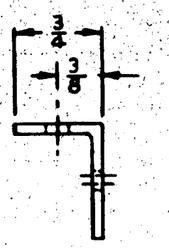

DETAIL - 8

NOTES:
1. RELIEF AND BEND RADII 1/8.
2. FINISH Z-2P-2NS LACQ M-485
3. HEAT TREAT -6 & -7 AFTER FORMING TO SR 53

S.O. 936-20-6

C77713 & 884T6
C91876

-8	PBY-5A	28G5078	1	
-7	PBY-5A	28G5078	1	
-6	PBY-5A	28G5078	1	
-8	PBY-5	28G5078	1	
-7	PBY-5	28G5078	1	
-6	PBY-5	28G5078	1	
ASS'Y DASH NO.	MODEL	NEXT ASS'Y	REQ.	

REQUIREMENTS PER AIRPLANE

REPLACES 2805113 OF 2-18-41 — CALC. WT.
REPLACED BY — ACT. WT.
UNLESS OTHERWISE SPECIFIED ± 1/32 — SCALE 12" = 1'0"
STAMP PART NUMBER WHERE SHOWN

PART NO.	STOCK	MATERIAL	SPEC.	LH REQ. -0	RH REQ. -0	LH REQ. -2	RH REQ. -2	LH REQ. -3	RH REQ. -3	LH REQ. -4	RH REQ. -4	LH REQ. -5	RH REQ. -5	ZONE
-8	*K78FX5 7/8	AL. AL. EXT.	QQA355-T											
-7	.081X10½X1	ALCLAD	QQA362-T											
-6	.081X6X2½	ALCLAD	QQA362-T											

PARTS LIST PER ASSY.

A.C.		2-18-41	M. KANN		D.M		B.W.
NAVY NOTED	NOTED	SINGER	P K				A
HEAT TREAT	FINISH	DRAFT	CHECK	STRUCT.	MAT.	APPROV.	ENG.

NAME SUPPORTS-FUEL DUMP VALVE DUCT - FWD
OPR. HAND
CONSOLIDATED AIRCRAFT CORP. SAN DIEGO, CALIF.
DWG. D SIZE
28G5113

FINISH CODE	
Z	ANODIC TREATMENT
P	P-27 PRIMER
GP	GREEN PRIMER
C	CADMIUM PLATE

R

28G5113

LET	ALTERATION	DATE	BY
A	ADDED VIA DWG		
B	EQA 817 EQ A2276 REVISED PER		
C	CH'G'D. DIM. 11 WAS 15. DSG. W.T. CHG.		

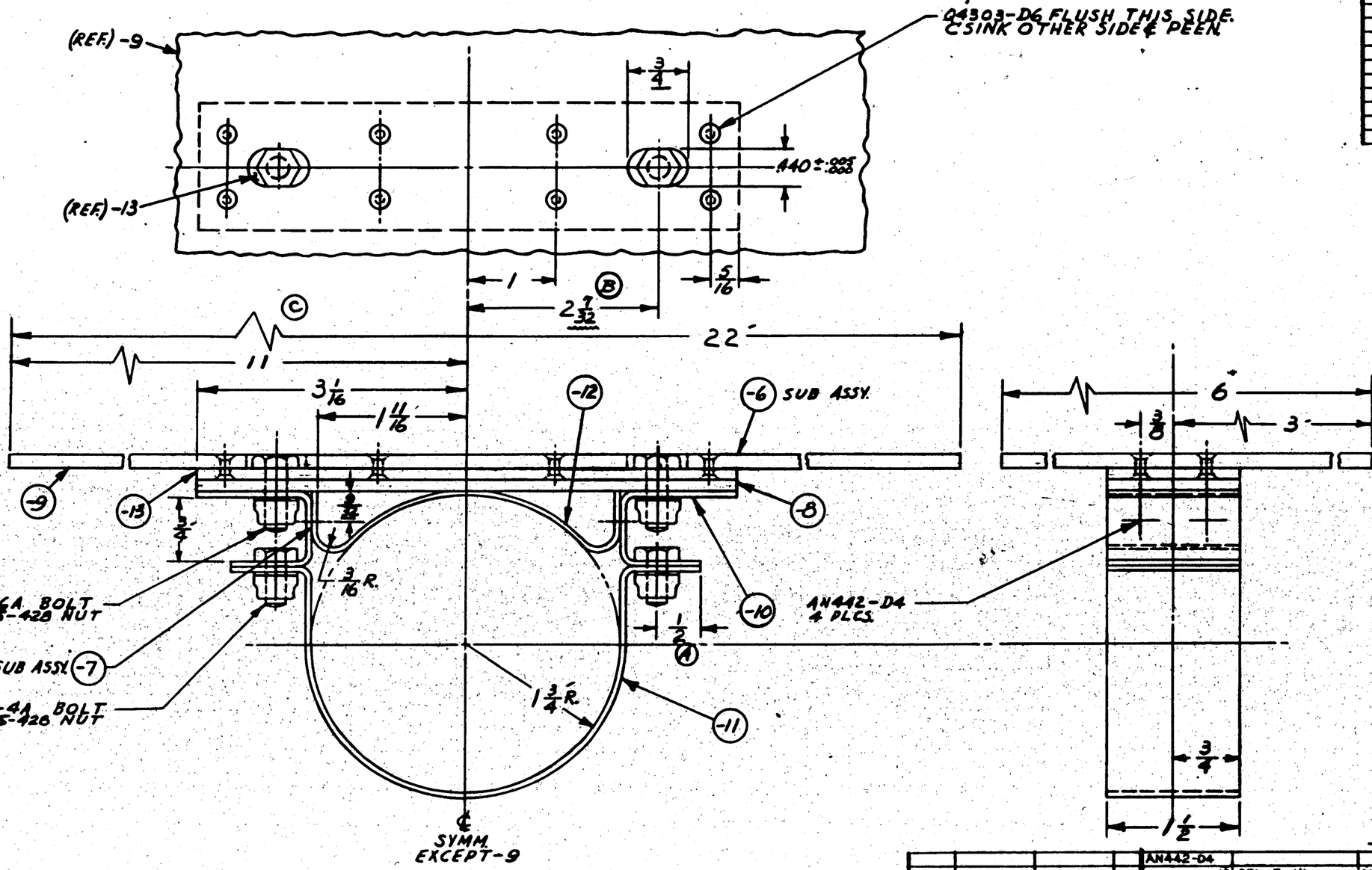

NOTES:-
1. ALL BEND RADII = 1/8 UNLESS OTHERWISE SPEC.
2. -12 H.T. SR-53 AFTER FORMING

N.S.- NON-SECULAR

FINISH CODE	
Z	ANODIC TREATMENT
P	P-27 PRIMER
AP	ALUMINIZED PRIMER
C	CADMIUM PLATE

S.O. 936-20-6

ASSY. DASH NO.	MODEL	NEXT ASSY.	REQ.
	PBY-5A	28G5078	1
	PBY-5	28G5078	1

#77713 & #88476
#91876

REQUIREMENTS PER AIRPLANE

REPLACES — CALC. WT. 2.85
REPLACED BY — ACT. WT.

UNLESS OTHERWISE SPECIFIED ± 1/32 — SCALE 12" = 1'0"

STAMP PART NUMBER WHERE SHOWN

PART No.	STOCK	MATERIAL	SPEC.	LH REQ. -0	RH REQ. -2	LH REQ. -3	RH REQ. -4	LH REQ. -5	RH REQ.
PARTS LIST PER ASSY.									
AN442-D4									
-12	.051 x 5 x 1½	ALC. 2430	47A8 COND. A	1					
-10	.064 x 3⅛ x 1½	ALC. 24ST	47A8 COND. T	2					
-7	SUB ASSY.								
Q4303-D6									
-9	.187 x 6 x 22	ALC. 24ST	47A8 COND. T	1					
-13	.125 x 6⅛ x 1½	ALC. 24ST	47A8 COND. T	1					
-6	SUB ASSY.								
AC365-428				4					
AN4-6A				2					
AN4-4A				8					
-11	.064 x 9⅛ x 1½	ALC. 24ST	47A8 COND T	1					
-6	.125 x 6⅛ x 1½	ALC. 24ST	47A8 COND. T	1					
-7	SUB ASSY.			1					
28G5114-6	SUB ASSY.			1					

AC — NAVY NOTED — HEAT TREAT

Z-2P-2 N.S. LACQ M488 HUDSON — FINISH

9-20-4 — DRAFT — CHECK — STRUCT. — MAT. — APPROV. — ENG.

NAME SUPPORT ASSY. FUEL DUMP VALVE DUCT-AFT

OPP. HAND —

CONSOLIDATED AIRCRAFT CORP. SAN DIEGO, CALIF.

SIZE D — 28G5114

R

EQA22748

LET	ALTERATION	DATE	BY
A	ADD. DIMS. 1/8R & 3/16. CHG'D.		
	DETAIL OF NOTCH. MFG. WT. CHG.	3-21-42	

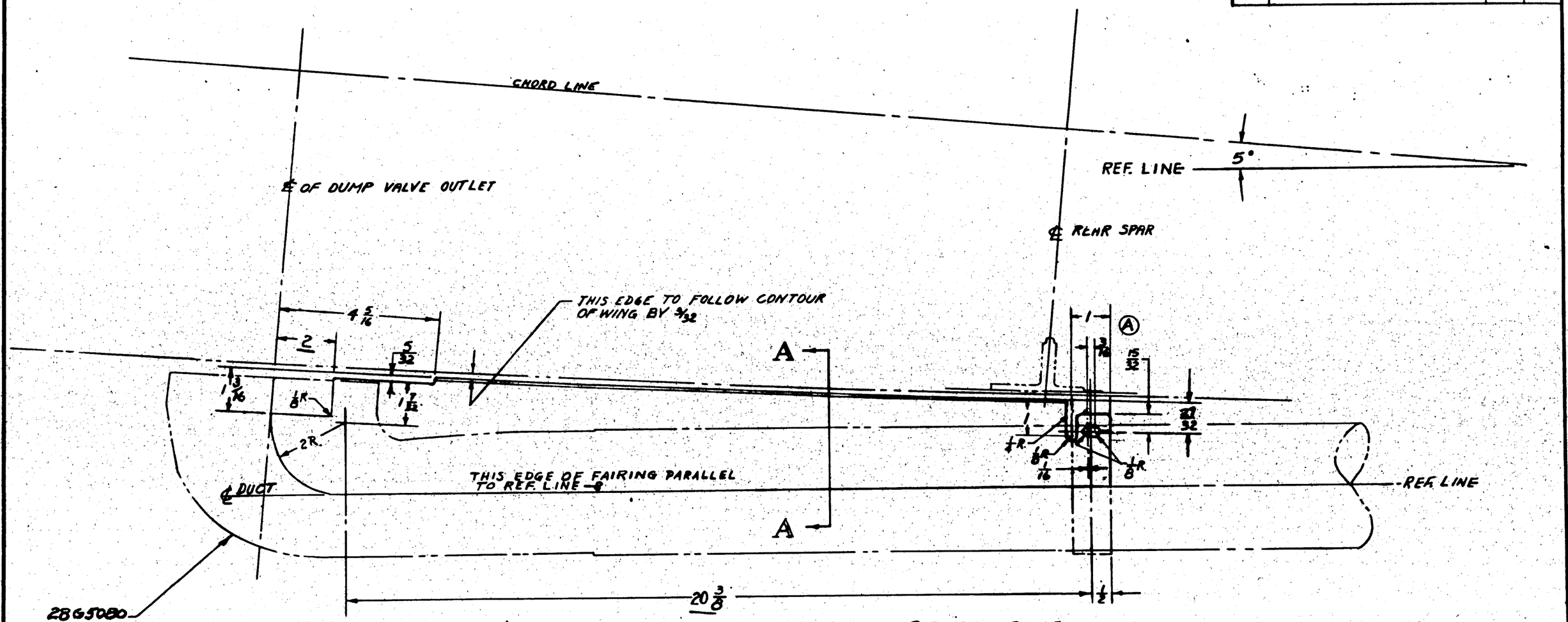

S.O. 936-20-6

C-777/3 & 88476	-R	PBY-5A	28G5080	1																	
	-L	PBY-5A	28G5080	1																	
	-2	PBY-5	28G5080	1																	
	-4	PBY-5	28G5080	1																	
ASSY. DASH NO.	MODEL	NEXT ASSY.	REQ.																		
REQUIREMENTS PER AIRPLANE																					
REPLACES		GALV. WT.																			
REPLACED BY		ADV. WT.																			
UNLESS OTHERWISE SPECIFIED DIMENSIONS ARE ± 1/32	SCALE 6"=1'-0"																				
STAMP PART NUMBER WHERE SHOWN																					
PART No.	STOCK	MATERIAL	SPEC.	LH REQ.	RH REQ.	LH REQ.	RH REQ.	LH REQ.	RH REQ.	LH REQ.	RH REQ.	LH REQ.	RH REQ.								
	.040-4⅝ x 23½	ALUM ½ HARD	47A2-½H.	-0		-2		-3		-4		-5									
PARTS LIST PER ASSY.																					

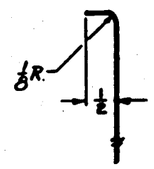

SECTION A-A

AC		3-12-42	KANN			
NAVY NONE	NONE	HILL	K.K.			
HEAT TREAT	FINISH	DRAFT	DESIGN	STRUCT.	HEAT	APPROV.	ENG.

NAME FAIRING - FUEL DUMP VALVE DUCT

OPP. HAND 28G5119-R

CONSOLIDATED AIRCRAFT CORP. SAN DIEGO, CALIF.

SIZE D

28G5119

R

LET	ALTERATION	DATE	BY
	E.D.C. 15163		
A	CHANGED LOCATION OF -7 FROM UNDERSIDE TO TOP-SIDE OF 28G5131	2-10-43	LARSEN
B	3/16 WAS 1/4	2-24-43	LARSEN
C	REMOVED AT -7, NOTE "WELD TO 28G5131" ADDED NOTE 2. MAT'L OF -7, 25S½H-ALUM. 97AT-½H WAS ALC. EAST. 97AB-T. NO WT CHG.	3-25-43	[illegible]
D	REMOVED - BE - 6 (2) WAS (1)	9-27-43	[illegible]
E	NOTE "CUT HOLES IN 28G5131 TO SUIT HOLES IN -6 TUBES" WAS "CUT HOLE IN 28G5131 TO SUIT HOLES IN -BE-3 TUBES" NEG. WT. CHG.	10-21-43	[illegible]
F	IN 3/16 CHG MAT'L ADDED FROM 25S½H ALUM, 97AB-½H TO AL. ALL. 52SO, 92Q-11 TEMP.-A FOR -7		

E.O.A. 30055

#10 (.193) DRILL 10 HOLES TO MATCH HOLES IN 28G5122

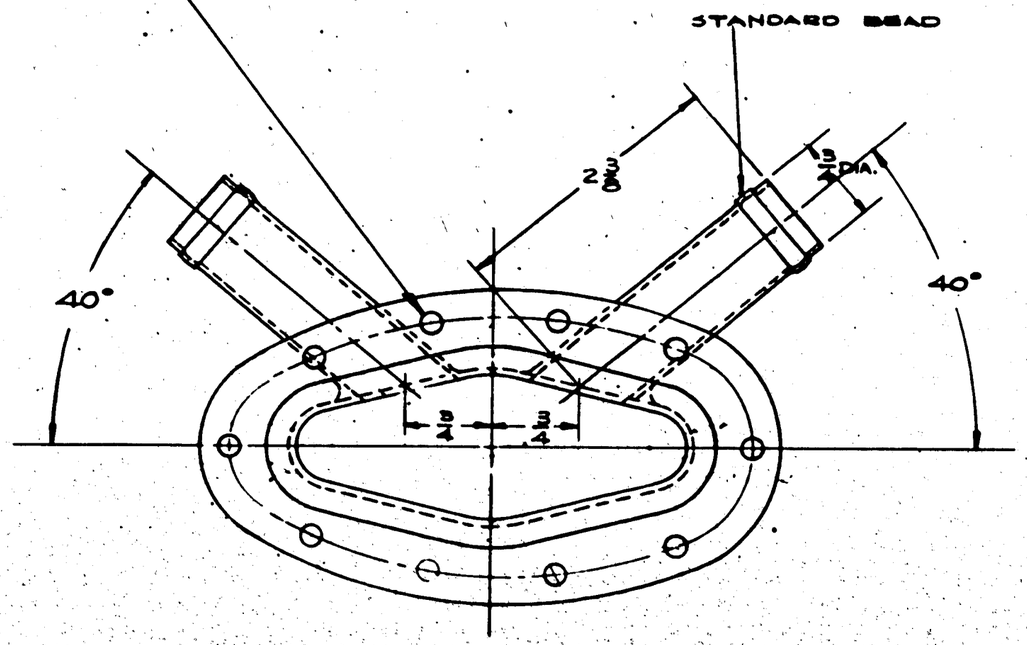

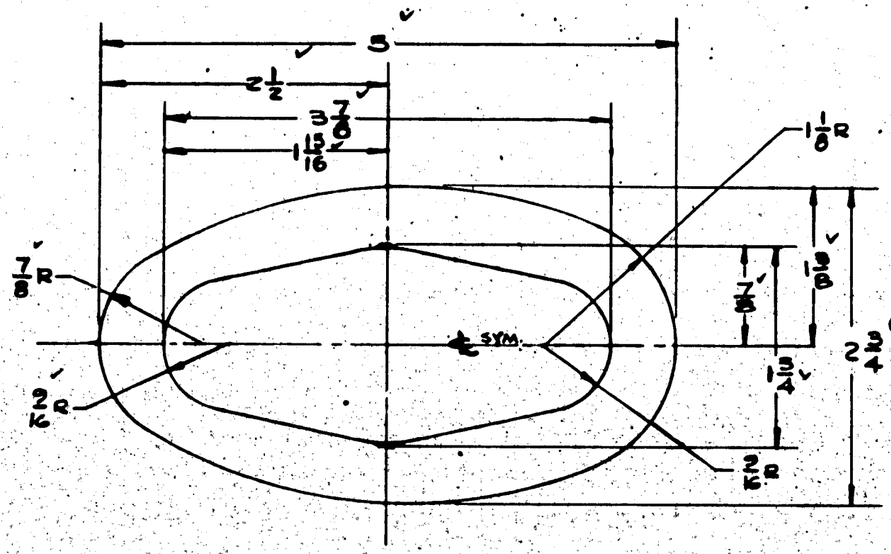

DETAIL -7

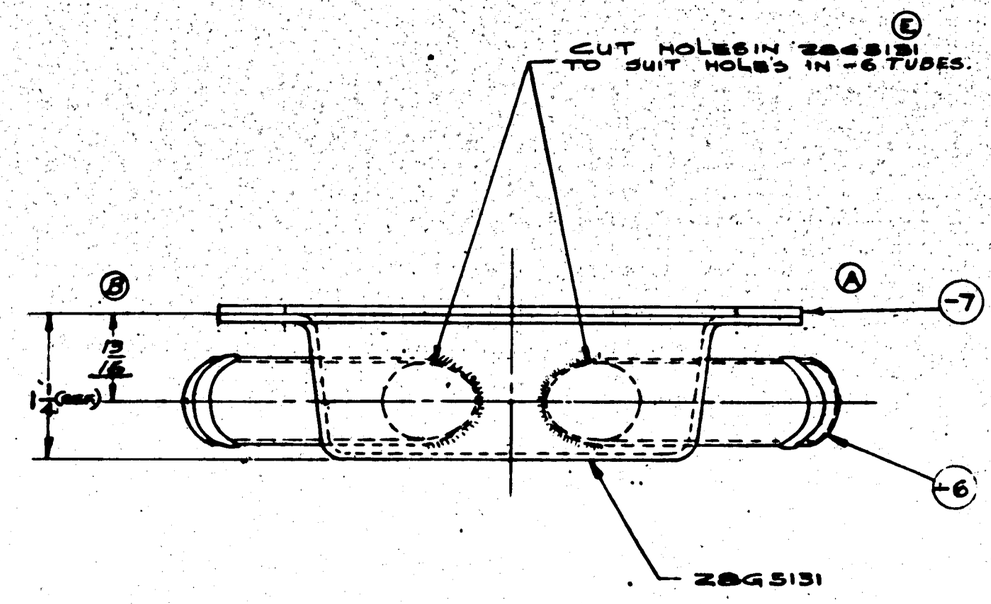

FINISH CODE	
Z	ANODIC TREATMENT
P	P-27 PRIMER
AP	ALUMINIZED PRIMER
C	CADMIUM PLATE

C* 70496 & 91876

ASSY. SHOWN IN	MODEL	NEXT ASSY.	REQ.
R	PBY-5B	28G30/0-1	1
L	PBY-5B	28G30/0	1
R	PBY-5A	28G20/0-1	1
L	PBY-5A	28G30/0	1
R	PBY-5	28G30/0-1	1
L	PBY-5	28G30/0	1

REQUIREMENTS PER AIRPLANE

REPLACES — GALC. WT.

REPLACED BY — ASY. WT.

SCALE 12" = 1'-0

± 1/32

STAMP PART NUMBER WHERE SHOWN

PART NO.	STOCK	MATERIAL	SPEC.	LH REQ. -0	RH REQ. -2	LH REQ. -3	RH REQ. -4	LH REQ. -5	RH REQ.
28G5121	COUPLING			1	1				
-7	.081 x 3 x 6 1/2	AL AL 52S0	97-A-11 TEMPER	1	1				
28G5121-6	3/4 OD x .049 x 2 3/4	AL AL 52S0	44T32-A	2	2				

PARTS LIST PER ASSY.

AC — NAVY None — HEAT TREAT — FINISH — DRAFT — KRUK — 7-7-41 — CHECK — MAT — APPROV.

NAME COUPLING CELL VENT - WING

CONSOLIDATED AIRCRAFT CORP. SAN DIEGO, CALIF.

OPP. HAND 28G5121-R

SIZE D — 2865121

2. WELD -7 TO 28G5131 AROUND INSIDE OF -7 (REF) & 28G5131 (REF)
1. WELD -6 TO 28G5131.

NOTES

LET	ALTERATION	DATE	BY
A	IN BOM, REPLACED "AL ALLOY CAST 6" & "4GAI CL 8" WITH "NOTED". REPLACED "NONE" WITH "NOTED." TO FACE ADDED		
	"MATERIAL NOTE". NO WT. CHG.	8-26-45	HODIK

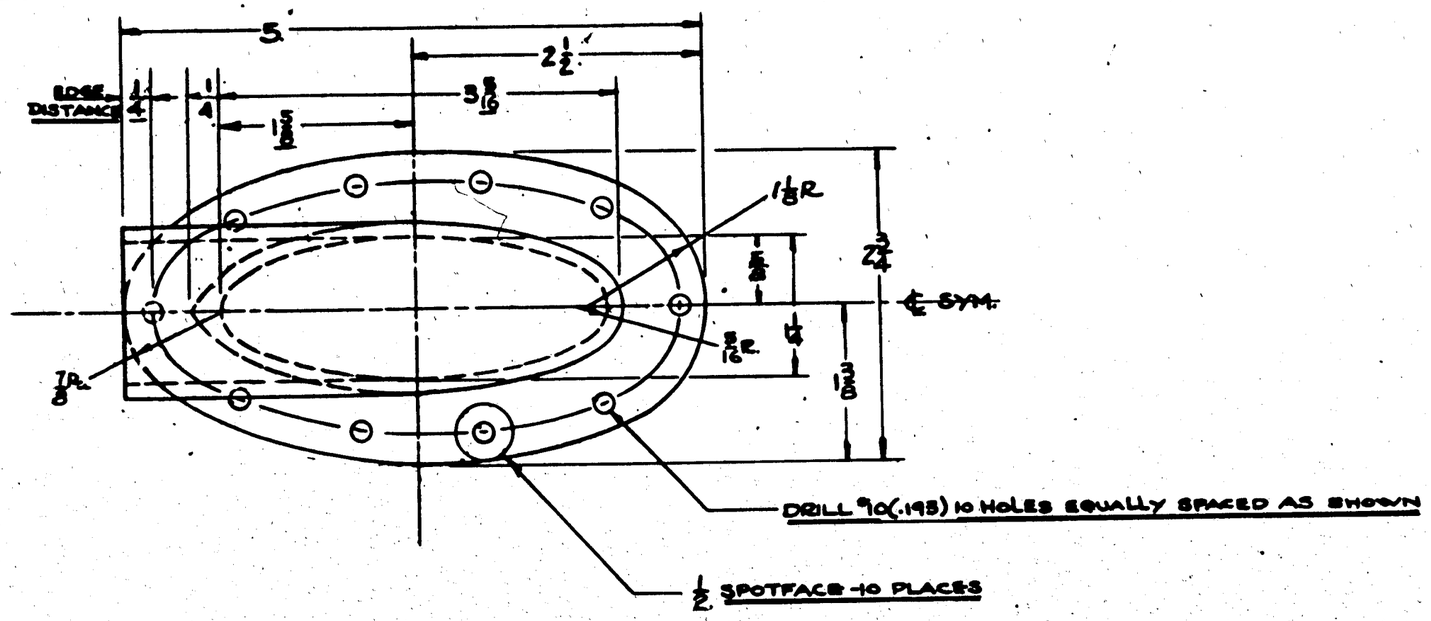

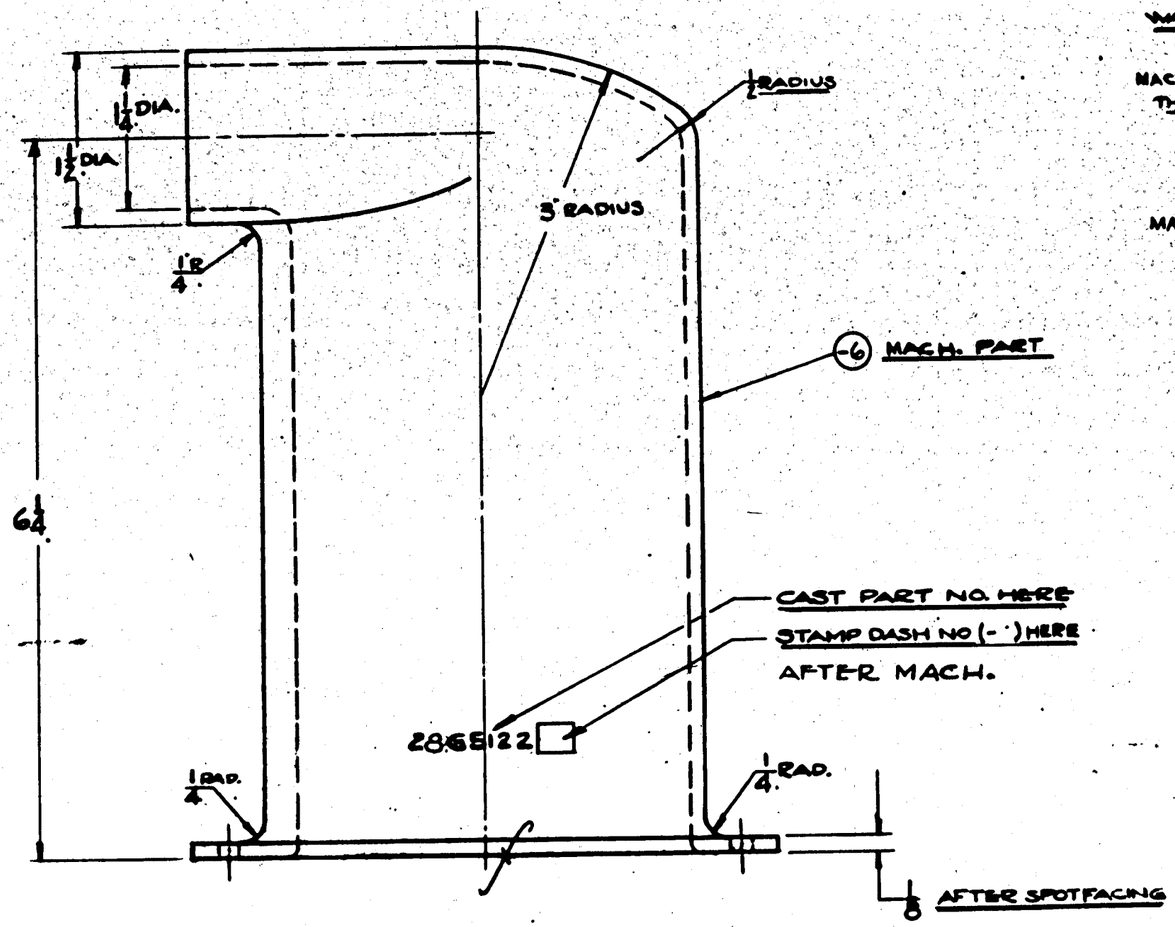

NOTES

WALL THICKNESS 1/8

MACHINING LIMITS ± .010

THIS CASTING, AS SOON AS AVAILBLE, TO BE USED ON FUTURE 28C5010 ASSY.

(A)

MATERIAL NOTE:

MATERIAL MAY BE-

1.- AL ALLOY CASTING 356T6, SPEC AN-QQ-A-304, T.S. 30,000 P.S.I., OR

2.- AL ALLOY CASTING 195T6, SPEC AN-A-5 CL II, T.S. 32,000 P.S.I.

FINISH CODE	
Z	ANODIC TREATMENT
P	P-27 PRIMER
AP	ALUMINIZED PRIMER
C	CADMIUM PLATE

ASSY DASH NO.	MODEL	NEXT ASSY.	REQ.
-6	PBY-5B	28C5010	2
-6	PBY-5A	28C5010	2
-6	PBY-5	28C5010	2

REQUIREMENTS PER AIRPLANE

REPLACES — CALC. WT.

REPLACED BY — ACT. WT.

SCALE 12" = 1'-0"

+1/32 & NOTED

STAMP PART NUMBER WHERE SHOWN

PART NO.	STOCK	MATERIAL	SPEC.	LH REQ.	RH REQ.	LH REQ.	RH REQ.	LH REQ.	RH REQ.	LH REQ.	RH REQ.	LH REQ.	RH REQ.
28C5122-6	MAKE FROM ROUGH CASTING												
28C5122	NOTED	NOTED	NOTED										
PARTS LIST PER ASSY.				-0		-2		-3		-4		-5	

A C			BRANDT				
NAVY NOTED	Z-P						
HEAT TREAT	FINISH	DRAFT	CHECK	STRUCT	MAT	APPROV	ENG.

NAME VENT FUEL CELL-WING

OPP. HAND

CONSOLIDATED AIRCRAFT CORP. SAN DIEGO, CALIF.

DWG. SIZE D — 28C5122

2865122

LET	ALTERATION	DATE	BY
A	V&DIMS ADDED	9-17-41	

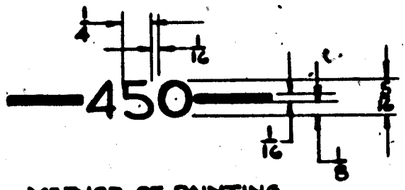

METHOD OF PAINTING NUMBERS ON PLATE
SCALE 12"=1'-0"

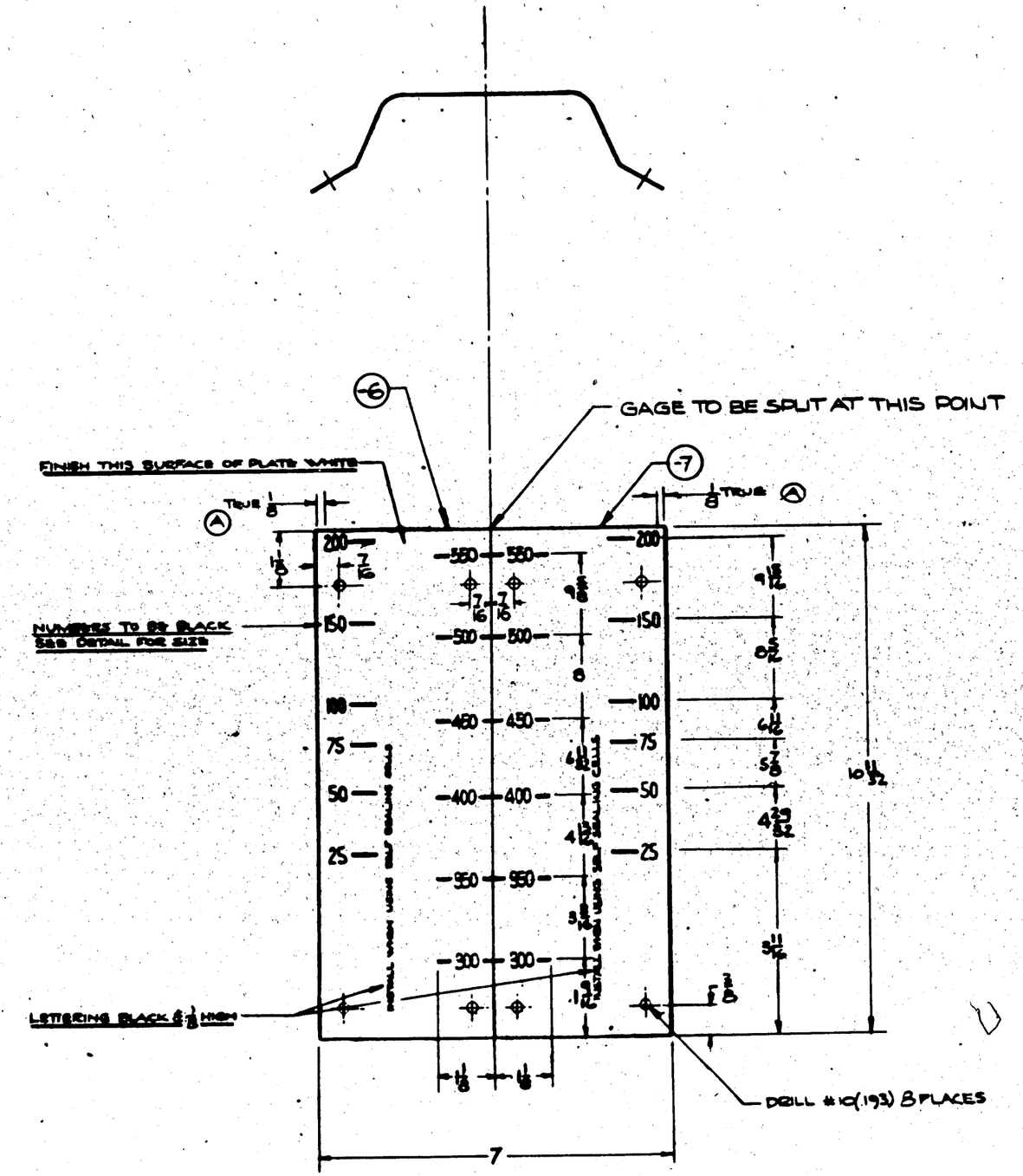

CONTR CHG "W"

NOTES

1. PASTE 28G5124 SHT 2 OVER 28G038 UNTIL METAL SCALE SHOWN ON 28G5124 SHT. 2 IS AVAILABLE.
(REF) 2. THIS PLATE IS TO FIT OVER FRONT OF 28G038 - SECURED WITH - 6BE-82 - AN526DD832-6 SCRS. - AND SO CENTERED THAT LOWER EDGE OF 28G5124 IS 2/16 ABOVE SHELF.

FINISH CODE	
Z	ANODIC TREATMENT
P	P-27 PRIMER
AP	ALUMINIZED PRIMER
C	CADMIUM PLATE

ASSY. DASH NO.	MODEL	NEXT ASSY.	REQ.
	PBY-5B	28G3002	1
	PBY-5A	28G3002	1
	PBY-5	28G3002	1

REQUIREMENTS PER AIRPLANE

REPLACES — CALC. WT.
REPLACED BY — ACT. WT.
UNLESS OTHERWISE SPECIFIED ± 1/32 — SCALE 6"=1'-0"
STAMP PART NUMBER WHERE SHOWN

PART NO.	STOCK	MATERIAL	SPEC.	LH REQ.	RH REQ.	LH REQ.	RH REQ.	LH REQ.	RH REQ.	LH REQ.	RH REQ.	LH REQ.	RH REQ.
-7	.020 = 4'/8 = 11	1ST AL SHT.	47A8 COAT	1									
-6	.020 = 4'/8 = 11	1ST AL SHT.	47A8 COAT	1									
				-0		-2		-3		-4		-5	

PARTS LIST PER ASSY.

AC
NAVY NONE
HEAT TREAT
2. P & NOTED
FINISH

	BRANDT				
DRAFT	CHECK	STRUCT	MAT	APPROV	ENG.
5-23-41				9-17-41	

NAME SCALE - FUEL SIGHT GAGE - REAR SELF SEALING CELLS
OPP. HAND

CONSOLIDATED AIRCRAFT CORP. SAN DIEGO, CALIF.

DWG. SIZE D — 28G5124 SHEET 1

LET	ALTERATION	DATE	BY
A	ADDED ½ DIMS.	9-17-41	

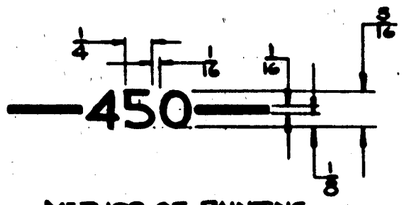

METHOD OF PAINTING NUMBERS ON PLATE

SCALE 12"=1'-0"

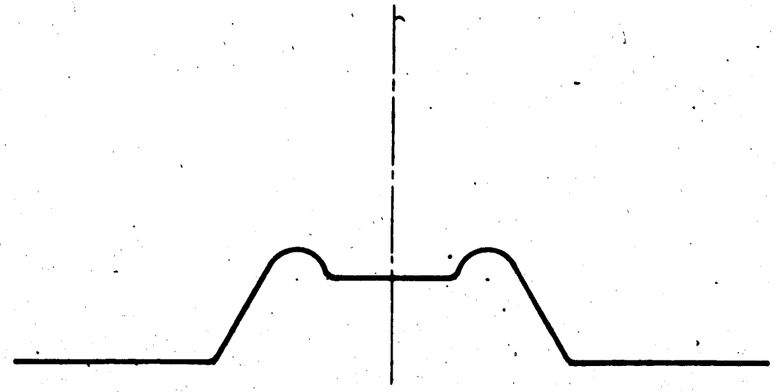

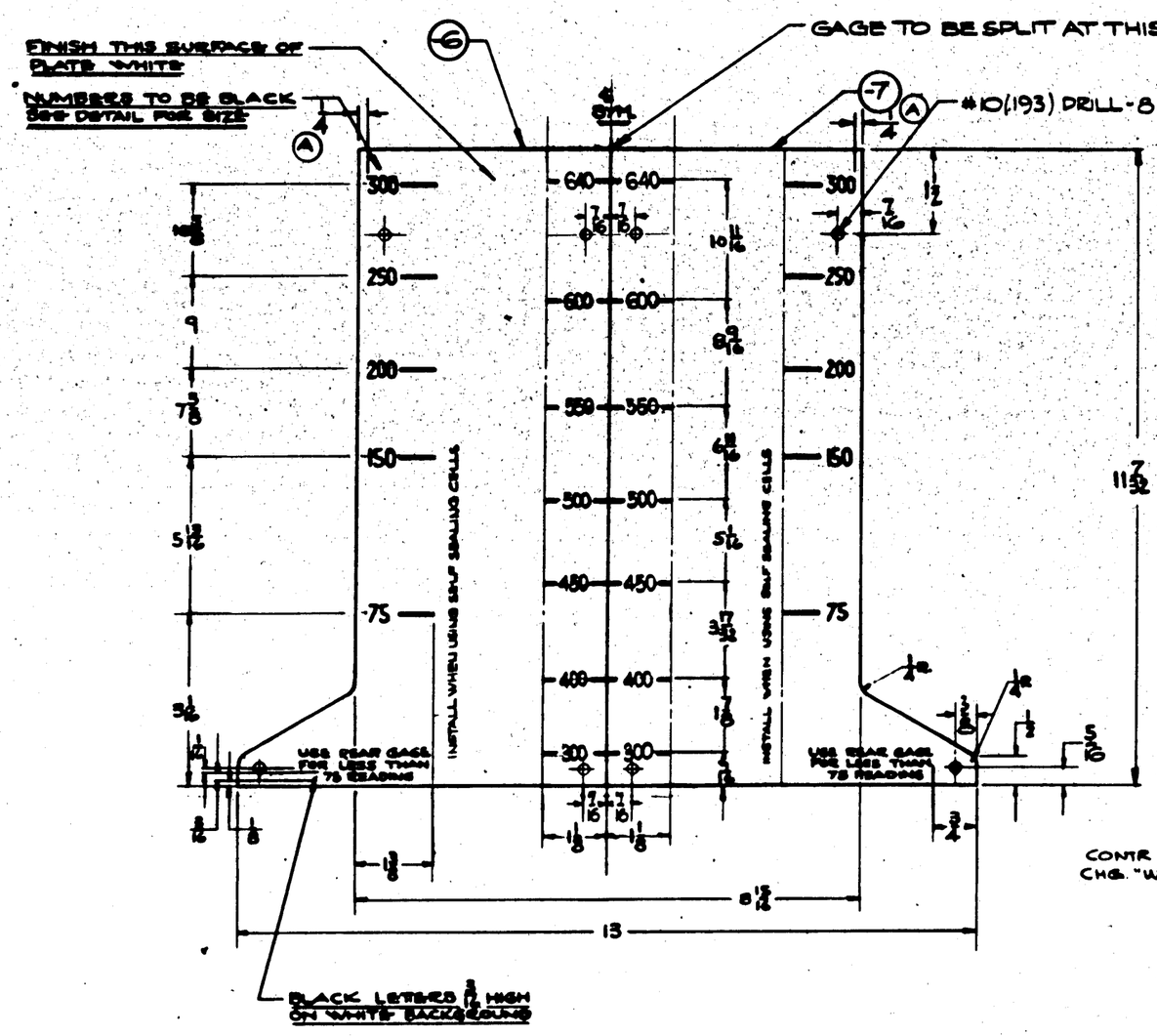

NOTE:—

1. PASTE 28G5126 SHT #2 OVER 28G037 UNTIL METAL SCALE SHOWN ON 28G5126 SHT #1 IS AVAILABLE

(REF) 2 THIS PLATE IS TO FIT OVER FRONT OF 28G037 - SECURED WITH 68E-82 AN526 DD-832-6 SCRS. AND SO CENTERED THAT LOWER EDGE OF 28G5126 IS 3/16 ABOVE SHELF.

FINISH CODE	
Z	ANOD. TREATMENT
P	P-27 PRIMER
AP	ALUMINIZED PRIMER
C	CADMIUM PLATE

ASSY. DASH NO.	MODEL	NEXT ASSY.	REQ'D.
	PBY-5B	28G3002	1
	PBY-5A	28G3002	1
	PBY-5	28G3002	1

REQUIREMENTS PER AIRPLANE

REPLACES — CALC. WT.

REPLACED BY — ACT. WT.

LIMIT ON DIMENSIONS UNLESS OTHERWISE SPECIFIED ± 1/32 — SCALE 6"-1'-0"

STAMP PART NUMBER WHERE SHOWN

PART No.	STOCK	MATERIAL	SPEC.	LH REQ.	RH REQ.	LH REQ.	RH REQ.	LH REQ.	RH REQ.	LH REQ.	RH REQ.	LH REQ.	RH REQ.
				-0		-2		-3		-4		-5	
-7	.090 x 8 1/16 x 12	24ST AL ALC SH	4TAB COMPT	1									
-8	.090 x 8 1/16 x 12	24ST AL ALC SH	4TAB COMPT	1									

PARTS LIST PER ASSY.

A C			DESIGN	BENNETT			
NAVY NONE	E-P & NOTED	8-22-41	STR.			9-10-41	
HEAT TREAT	FINISH	DRAFT	CHECK	STRUCT	MAT	APPROV	ENG.

NAME SCALE - FUEL SIGHT GAGE - FRONT SELF SEALING CELLS

OPP. HAND

CONSOLIDATED AIRCRAFT CORP. SAN DIEGO, CALIF.

DWG. SIZE D

28G5126 SHEET NO. 1

LET	ALTERATION	DATE	BY
A	ASSIGNED -700 & 701		
	" (MADE FROM -9)	12-18-42	Scott & Lucas
B	TO B/M, ADDED "28P5181 (1 REQ); AT 28P5181 & 22PG42, ADDED "(SEE NOTE 2). TO FACE, ADDED NOTE 2; AT CALL OUT OF 22PG42 HOOK, ADDED "(SEE NOTE 2)" & "28P5181 (SEE NOTE 2)".		
	NO WT. CHG.	8-16-43	HODIK

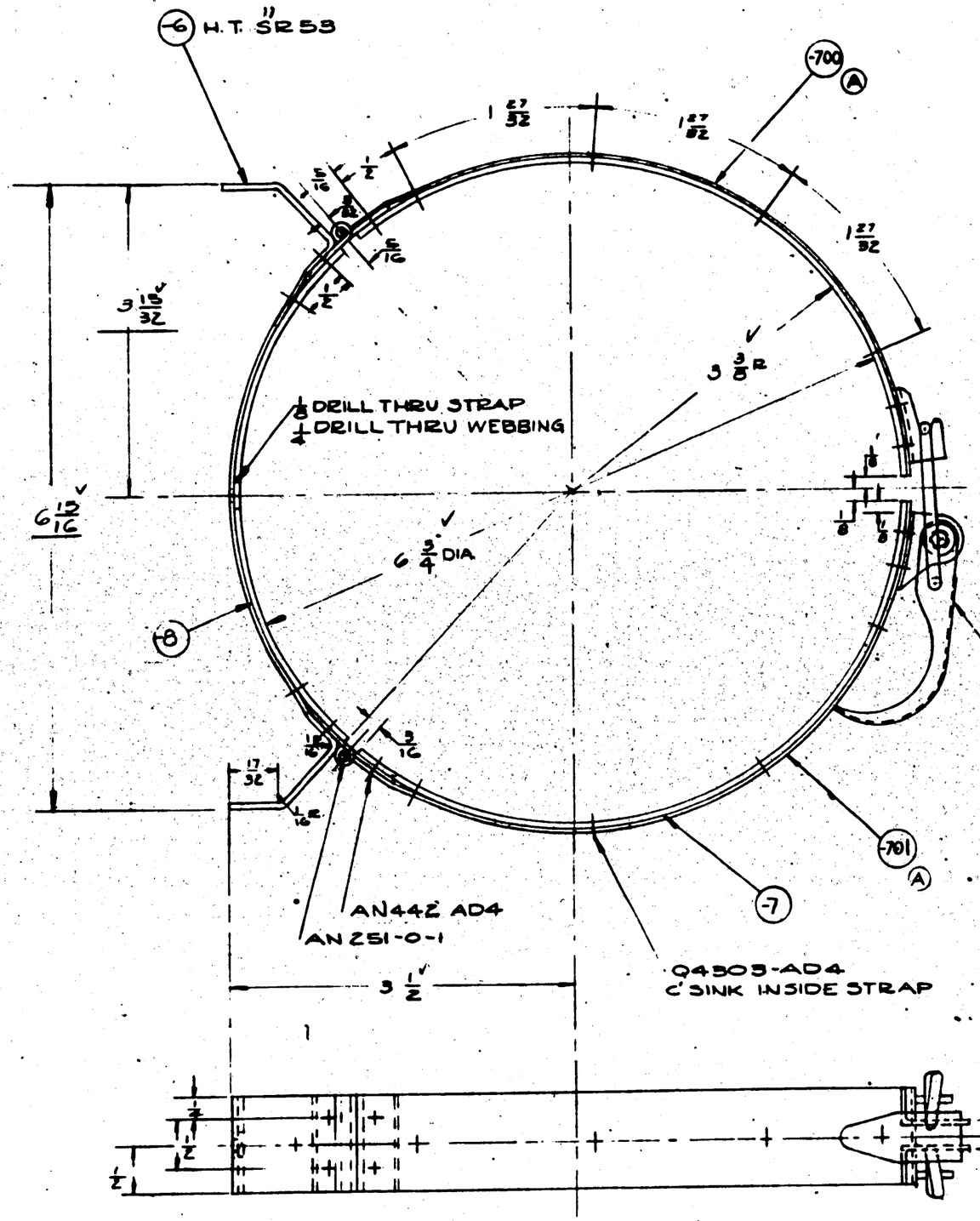

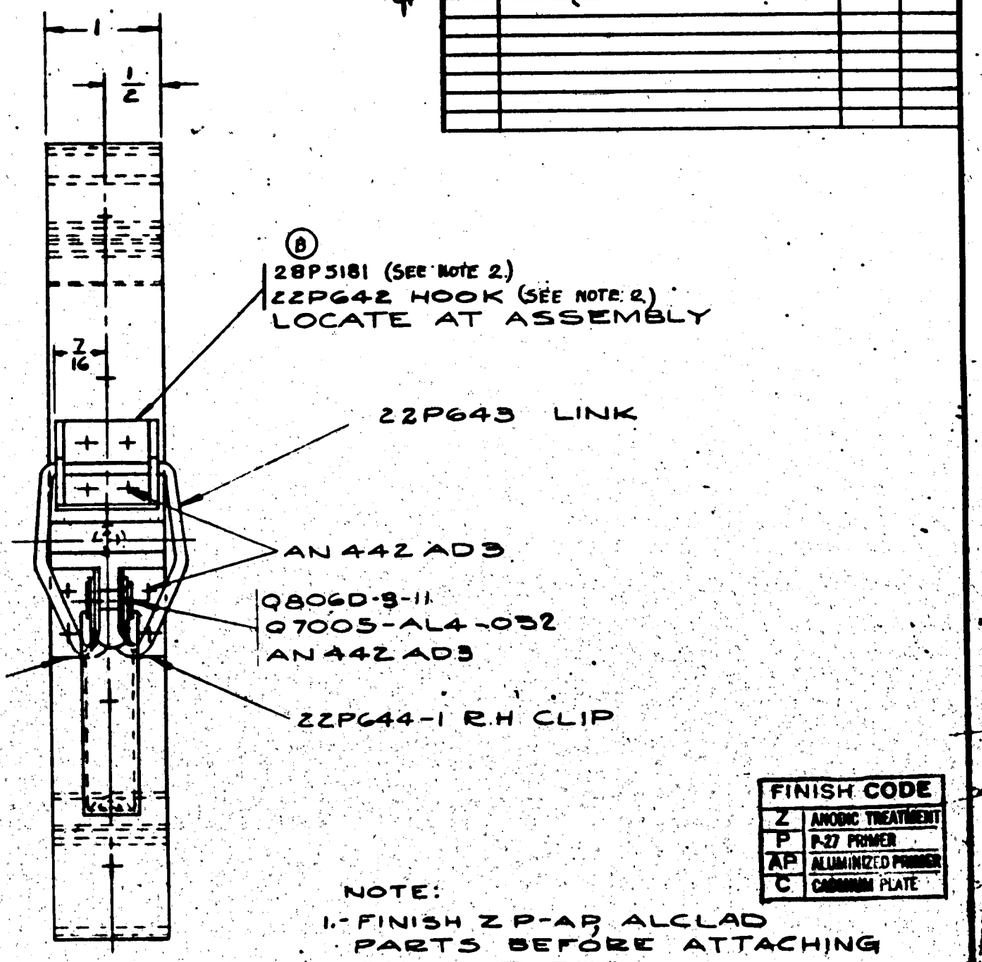

FINISH CODE	
Z	ANODIC TREATMENT
P	P-27 PRIMER
AP	ALUMINIZED PRIMER
C	CADMIUM PLATE

NOTE:

1.- FINISH Z P-AP ALCLAD PARTS BEFORE ATTACHING STEEL PARTS

(B)

2.- 22PG42 IS AN INTERCHANGEABLE ALTERNATE FOR 28P5181.

ASSY. DASH NO.	MODEL	NEXT ASSY.	REQ.
	XP4Y-1	28G5091	1
	PBY-5A	28G5091	1
	PBY-5	28G5091	1

REQUIREMENTS PER AIRPLANE

REPLACES — CALC. WT.

REPLACED BY — ACT. WT.

SCALE 12"=1'-0"

+ 1/32 — STAMP PART NUMBER WHERE SHOWN

PART NO.	STOCK	MATERIAL	SPEC.	LH REQ. -0	RH REQ. -2	LH REQ. -3	RH REQ. -4	LH REQ. -5	RH REQ.
07005-AL4-032									
Q806D-3-11									
Q4503-AD4									
28P5181	(SEE NOTE 2.)								
AN 442 AD3									
AN 442 AD4									
AN 251-0-1									
22PG44-1									
22PG44									
22P643									
22PG42	(SEE NOTE 2.)								
22PG41									
-700	(MAKE FROM -9)								
-701	(MAKE FROM -9)								
-9	OD 2 x 1 x 8 1/2	ALCL 2467 T	47A8 comb T.						
-8	1/16 x 1 x 6								
-7	1/16 x 1 x 8								
28G5128-0	064 x 9 x 1 1/2	ALCL 2430	47A8 comb A						

PARTS LIST PER ASSY.

AC		5-29-43	DRAWN					
NAVY NOTED	NOTED		VALVE					
HEAT TREAT	FINISH		DRAFT	CHECK	STRUCT	MAT	APPROV	ENG.

NAME STRAP ASSY

MNTG BRKT PURGING SYSTEM

OPP. HAND

CONSOLIDATED AIRCRAFT CORP. SAN DIEGO, CALIF.

SIZE D

28G5128

8215280

LET	ALTERATION	DATE	BY
A	MAT'L. -6(ST) WAS SQ. REM. M.T. NOTE	2-24-41	

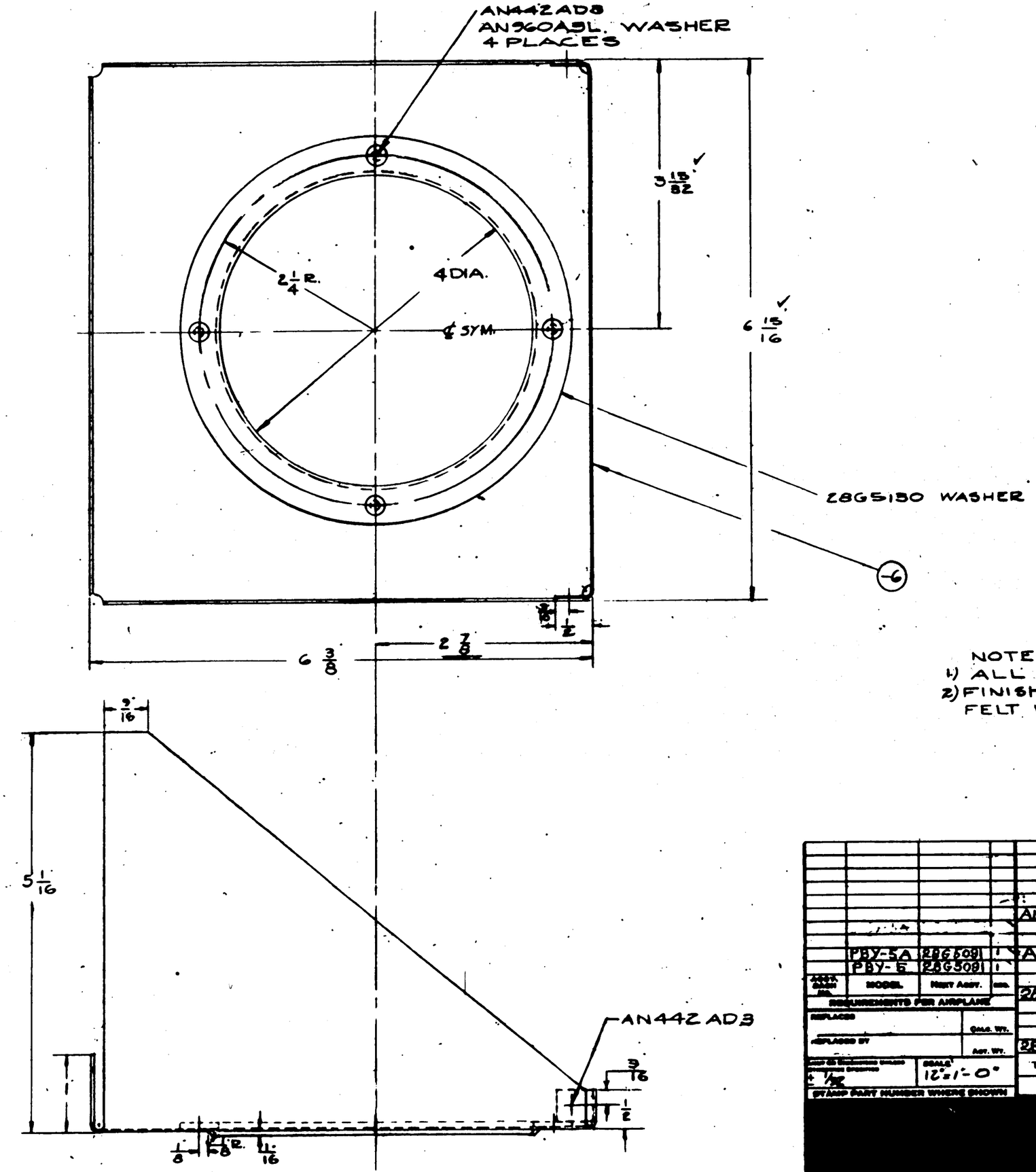

NOTE:
1) ALL BEND RADII 1/16
2) FINISH: ZP-AP EXCEPT FELT WASHER

FINISH CODE	
Z	ANODIC TREATMENT
P	P 27 PRIMER
AP	ALUMINIZED PRIMER
C	CADMIUM PLATE

| | | |

LET	ALTERATION	DATE	BY

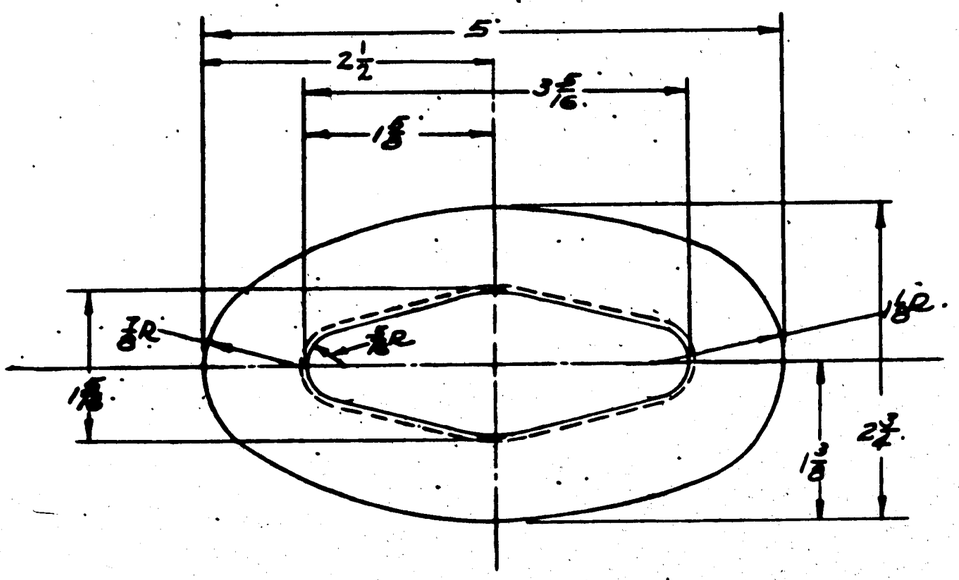

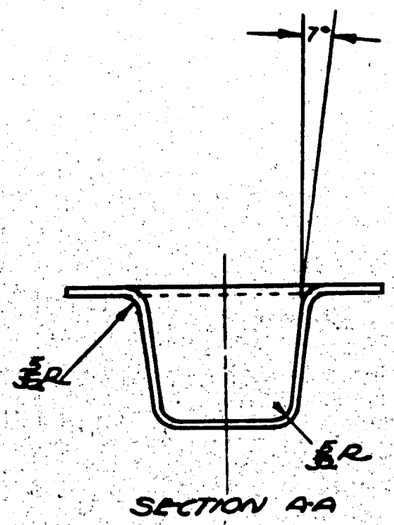

SECTION A-A

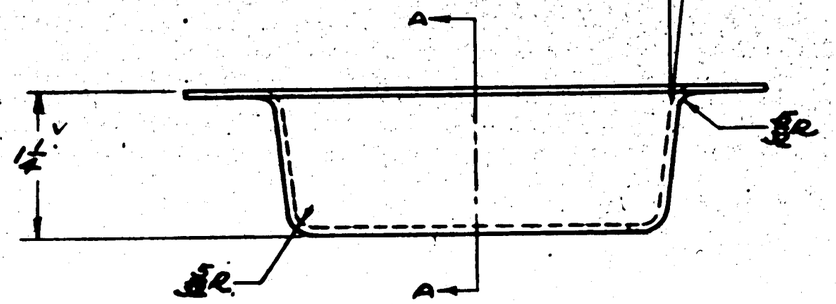

PAY-5A	2865121	2	
PAY-5	2865121	2	
ASSY. DASH No.	MODEL	NEXT ASSY.	REQ'D.

REQUIREMENTS PER AIRPLANE

REPLACES	CALC. WT.
REPLACED BY	ACT. WT.
UNLESS OTHERWISE SPECIFIED ± 1/32	SCALE 12" = 1'0"

STAMP PART NUMBER WHERE SHOWN

PART No.	STOCK	MATERIAL	SPEC.	LH REQ.	RH REQ.	LH REQ.	RH REQ.	LH REQ.	RH REQ.	LH REQ.	RH REQ.	LH REQ.	RH REQ.
2865131	.051 X 6 X 9	2230	47A11 Type A										
				-0		-2		-3		-4		-5	

PARTS LIST PER ASSY.

AC						
NAVY NONE	NONE	6-16-41				
HEAT TREAT	FINISH	DRAFT	CHECK	STRUCT	MAT	APPROV	ENG.

NAME COUPLING FUEL CELL VENT

OPP. HAND

CONSOLIDATED AIRCRAFT CORP. SAN DIEGO, CALIF.

SIZE D

2865121

12

LET	ALTERATION	DATE	BY
A	ADDED (6) 1/8 DRAIN HOLES AND LOCATING DIMS. per EO A42898	6-29-41	EME

EO A42898

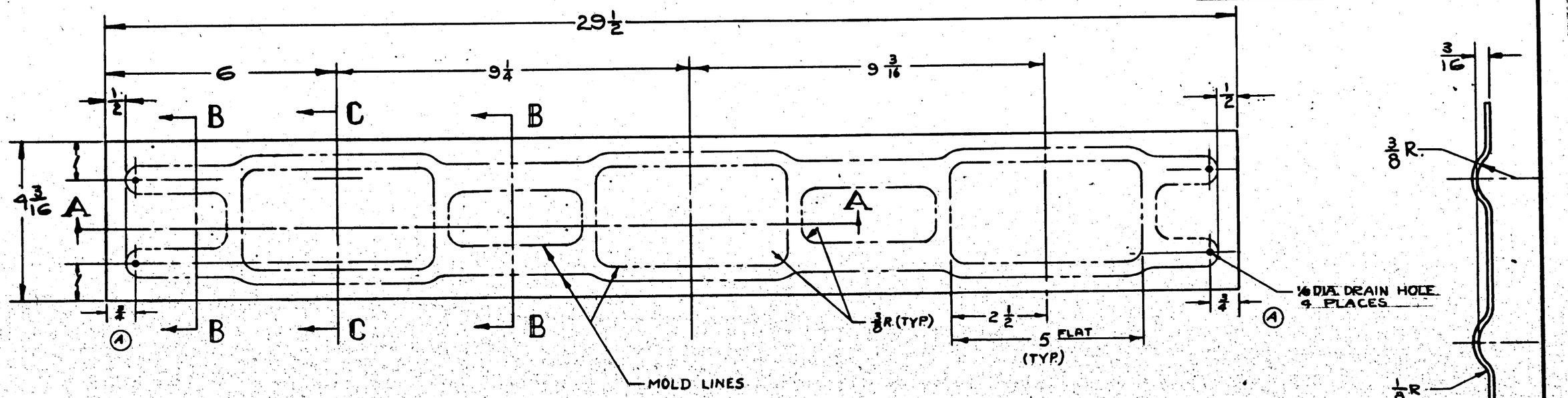

SECT. B-B
12" = 1'-0"

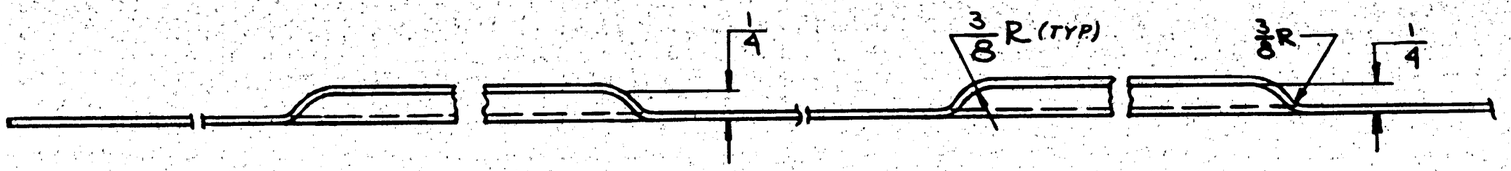

SECTION A-A
12" = 1'-0"

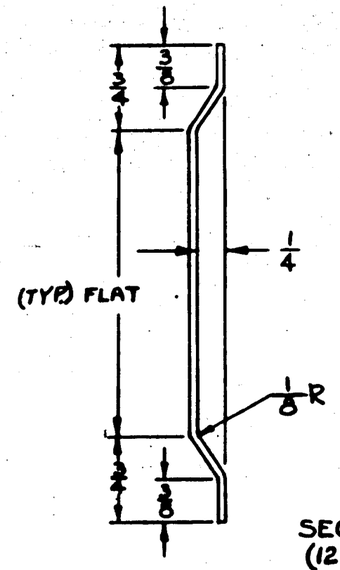

SECTION C-C
(12" = 1'-0")

CONT. CHG. "W"

RUSH RELEASED 10-24-41

ASSY. DASH No.	MODEL	NEXT ASSY.	REQ.
	28-SAMN	28G5161	2
	28-SMN		2
	28-SMA		2
	28-SME		2
	PBY-5A		2
	PBY-5	28G5161	2

REQUIREMENTS PER AIRPLANE

REPLACES — CALC. WT.

REPLACED BY — ACT. WT.

UNLESS OTHERWISE SPECIFIED ± 1/32 — SCALE 6" = 1'-0"

STAMP PART NUMBER WHERE SHOWN

PART No.	STOCK	MATERIAL	SPEC.	LH REQ.	RH REQ.	LH REQ.	RH REQ.	LH REQ.	RH REQ.	LH REQ.	RH REQ.	LH REQ.	RH REQ.
	@ .064 X 5 X 30	2A30 ALCLD	47A3 Comp A	-0	-2	-3		-4		-5			

PARTS LIST PER ASSY.

AC		KARL WILL						
NAVY SR-53	Z-2P	10-14-41						
HEAT TREAT	FINISH	DRAFT	CHECK	STRUCT	MAT	APPROV	ENG.	

FINISH CODE	
Z	ANODIC TREATMENT
P	P-27 PRIMER
AP	ALUMINIZED PRIMER
C	CADMIUM PLATE

NAME
PLATE
MANIFOLD REINF.-BAY "1-OUT B'D-REAR LINER

CONSOLIDATED AIRCRAFT CORP. SAN DIEGO, CALIF.

OPP. HAND

SIZE D

28G5150

LET	ALTERATIONS	
C	TRACED NO WT. CHG.	

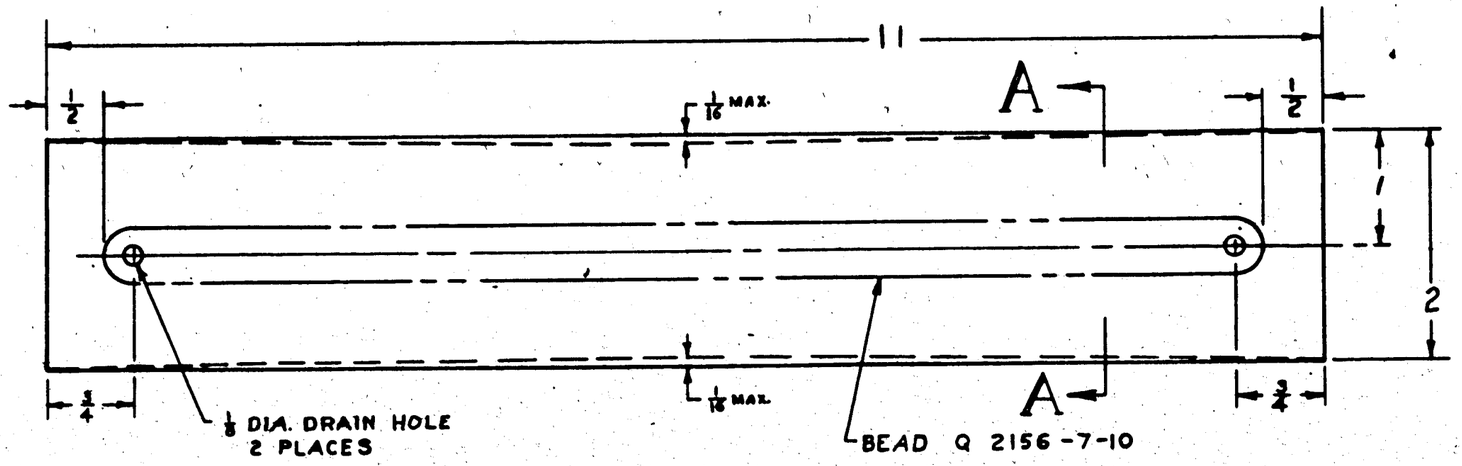

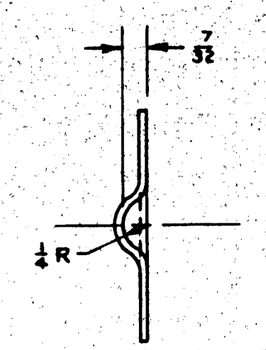

SECTION A-A

NOTES:

1. PLATE MUST BE REASONABLY FLAT AFTER HEAT TREAT.
2. A MAX. DRAW OF 1/16 IN FORMING IS PERMISSABLE AS SHOWN.

FINISH CODE	
Z	ANODIC TREATMENT
P	F-27 PRIMER
GP	GREEN PRIMER
C	CADMIUM PLATE

ASSY. DASH NO.	MODEL	NEXT ASSY.	REQ.
	28-5MN, AM	2865170	2
	28-5ME, MA	"	2
	PBY-5A	"	2
	PBY-5	2865170	2

REQUIREMENTS PER AIRPLANE

REPLACED 2865158 OF 10-15-41 — CALC. WT.

REPLACED BY — ACT. WT.

UNIT ON DIMENSIONS UNLESS OTHERWISE SPECIFIED ± 1/32 — SCALE 12" = 1'-0"

STAMP PART NUMBER WHERE SHOWN

PART NO.	STOCK	MATERIAL	SPEC.
	.064 X 11 1/16 X 2 1/8	ALCLAD	QQ-A-362

PARTS LIST PER ASSY.

AC		MODEL
NAVY	Z-2P	DWG. NO.
HEAT TREAT	FINISH	SHEET

NAME PLATE
MANIFOLD REINF.-BAY #4-CENTR-FR'T LIN'R

CONSOLIDATED VULTEE AIRCRAFT CORP. SAN DIEGO DIVISION . . . SAN DIEGO, CALIF.

SIZE D — 2865158

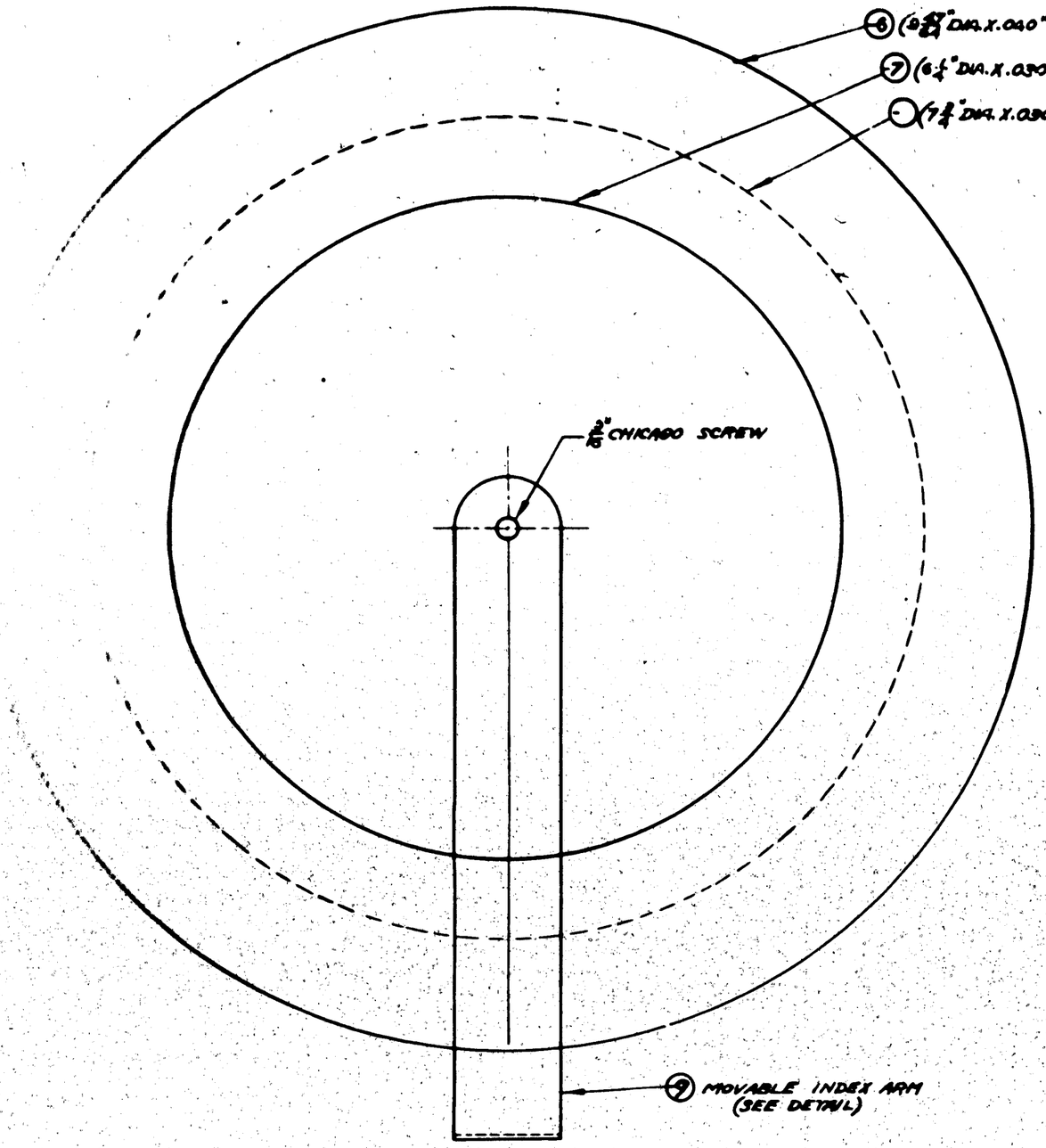

INSTRUCTIONS:
FOLLOWING IS A TABULATION OF THE NUMBERS OF THE DRAWINGS FROM WHICH ONE-HALF SIZED PLATES ARE TO BE MADE FOR PRINTING ON THE PARTS INDICATED:

DRAWING NUMBER	PART ON WHICH DRAWING DATA ARE TO BE PRINTED
28F5409	28F5416-7
28F5410	28F5416-8
28F5411	28F5416-6 (ON ONE FACE)
28F6108	28F5416-6 (ON OTHER FACE)

NOTES:

(1) IN ASSEMBLING:
-7 TO BE ASSEMBLED ON FACE OF -6 DIAL ON WHICH DATA OF DRAWING 28F5411 ARE PRINTED.
-8 TO BE ASSEMBLED ON FACE OF -6 DIAL ON WHICH DATA OF DRAWING 28F6108 ARE PRINTED.

(2) DIALS -7 & -8 SHOULD TURN FREELY RELATIVE TO -6 DIAL

(3) IN PRINTING DATA ON VARIOUS DIALS, OUTERMOST CIRCUMFERENCE LINES MUST NOT BE REPRODUCED.

(4) DO NOT SCALE DRAWING.

PURCHASE TO DWG
FURNISHED WITH PURCHASED PART 28F5415

DETAIL ⑨ (.030 PYRALIN)

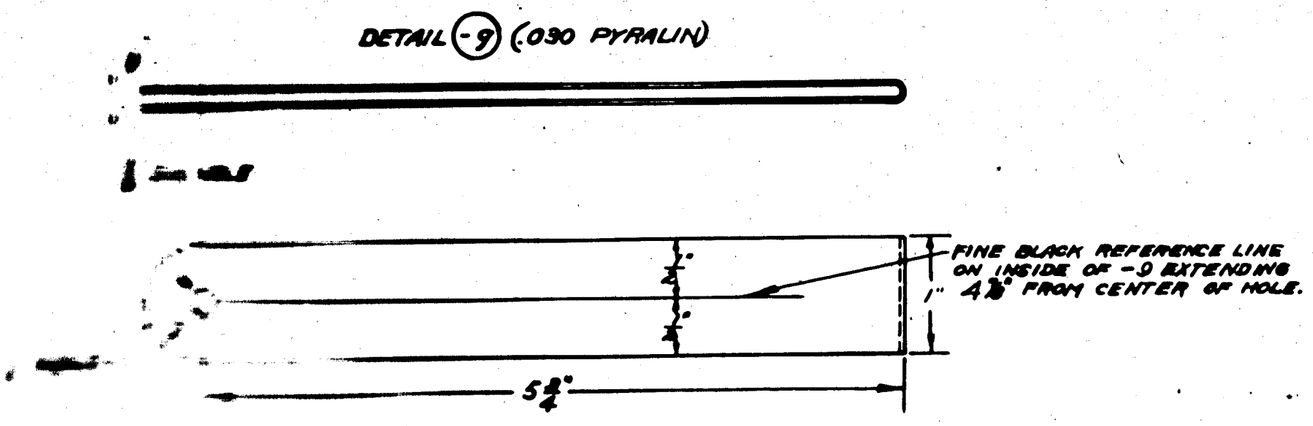

ASSY DASH NO.	MODEL	NEXT ASSY	REQ.
-0	PBY-5A	28F5416-5	
-0	PBY-5A	28F5416-3	
-0	PBY-5A	28F5416-2	
-0	PBY-5	28F5416-4	
-0	PBY-5	28F5416-1	

REQUIREMENTS PER AIRPLANE
REPLACES — CALC WT.
REPLACED BY — ACT WT.
SCALE 12"=1'-0"
STAMP PART NUMBER WHERE SHOWN

PART NO	STOCK	MATERIAL	SPEC.	LH REQ. -0	RH REQ. -2	LH REQ. -3	RH REQ. -4	LH REQ. -5	RH
-0		NOTED		1					
-2		"			1				
-3		"				1			
-4		"					1		
-5								-	

PARTS LIST PER ASSY.

A C		APPROVED	S.H.A.			PACIFIC ZUDE	
NAVY NONE	NONE	4-13-42	4-13-42		M.E.G.		Weld
HEAT TREAT	FINISH	DRAFT	CHECK	STRUCT	MAT	APPROV	ENG

NAME BAL-O-DIAL ASSEM. — OPP. HAND

CONSOLIDATED AIRCRAFT CORP. San Diego, Calif

SIZE D — 28F5416

LET	ALTERATION	DATE	BY

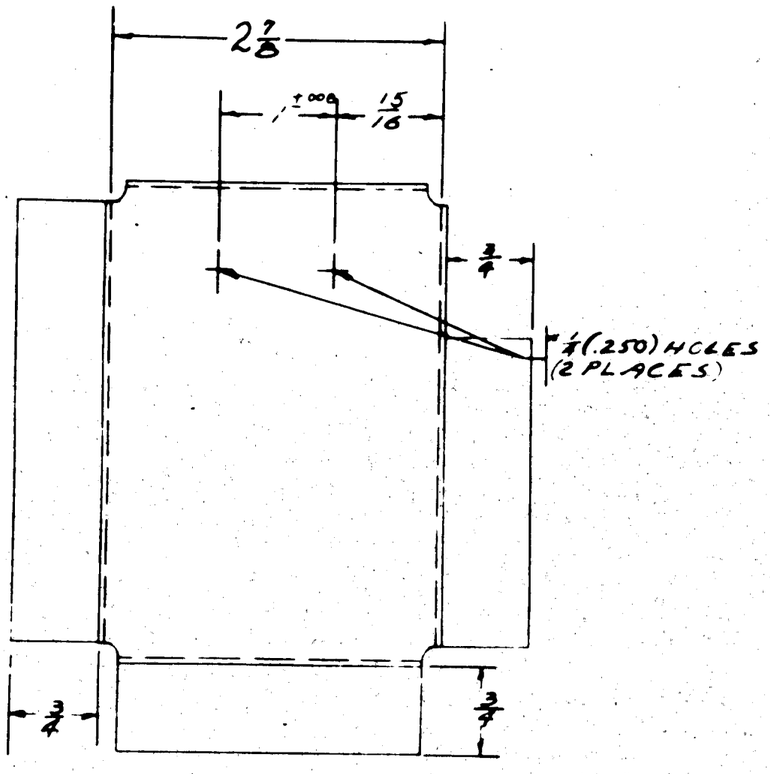

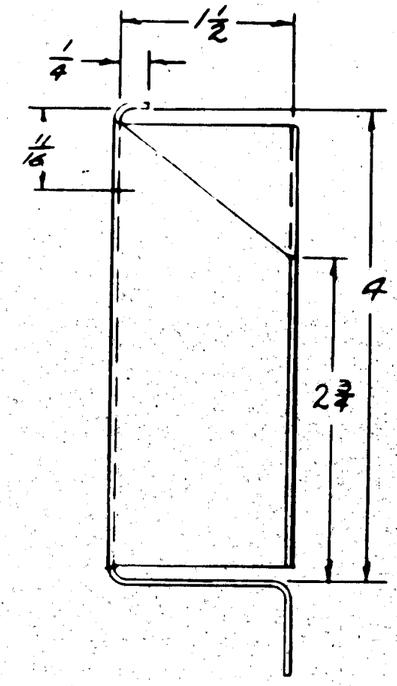

ALL BEND & RELEIF RADII 1/8

FINISH CO.	
Z	ANODIC TREATING
P	P-27 PRIMER
AP	ALUMINIZED PRIM.
C	CADMIUM PLATE

RELEASE AFTER RUSH RELEASE 12/23/41

#2456 TO #2988 INCL.
#7203 TO #7293 INCL.
C-77713 #1-3

ASSY DWGN NO.	MODEL	NEXT ASSY	REV
	PBY-5A 28F6211		1

REQUIREMENTS PER AIRPLANE

REPLACES — .139 CALC WT.

REPLACED BY — ACT WT

SCALE 12" = 1'0"

± 1/32 IF NOTED

STAMP PART NUMBER WHERE SHOWN

PART NO	STOCK	MATERIAL	SPEC	REQ -0	REQ -2	REQ -3	REQ -4	REQ -5
3	240 x 63 x T3/4	2450 ALC.	STAB-A	1				

PARTS LIST PER ASSY

AC —
NAVY SP-53 (SUB T)
HEAT TREAT

ZP-AP
FINISH

PACKER 12/9/41
DRAFT

GASKET LIST PER PLAN
1-3-4

NAME BRKT-FURNS-WIND-SHIELD ALCOHOL PUMP

CONSOLIDATED AIRCRAFT CORP. San Diego, Calif.

OPP HAND NONE

DWG D

28F6208

R

NOTE - ALL RELIEF & BEND RADII 1/16

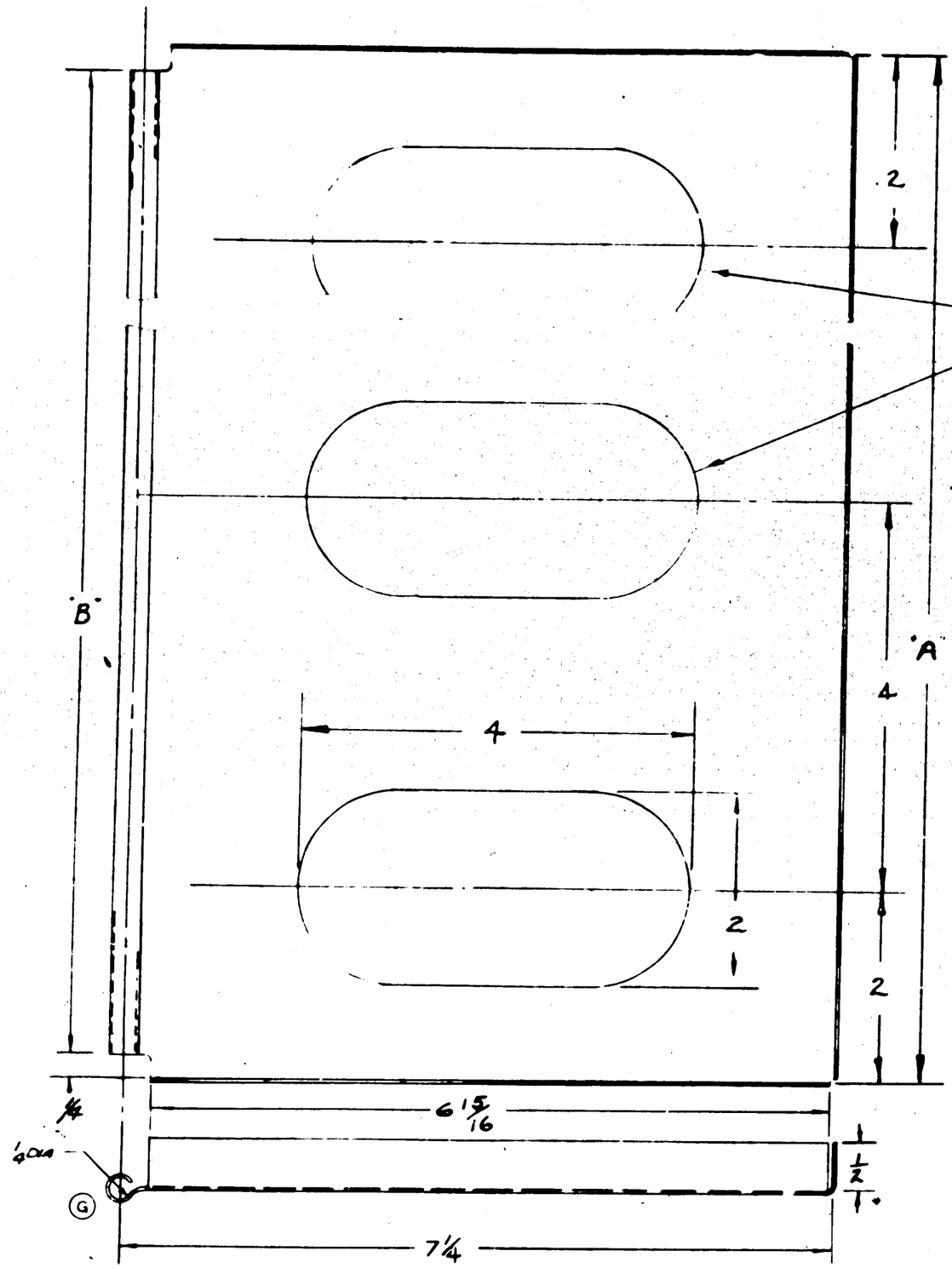

LET	ALTERATION	DATE	BY
A	"A" DIM WAS 72, "B" DIM WAS 71⅞, "C" WAS 18		
	ADDED TABULATION AND -4 & -5 ASSY WITH REQTS. FOR PBY-5		
B	ADDED -4 & -5 ASSY TO TABULATION & B/M. FOR PBY-5A.		
C	ADDED REQTS. OP-3 FOR PBY-5A.		
D	CHG'D MATERIAL FROM 61AR-A TO 61AR-T		
E	CREATED -6 & ADDED TO DETAIL		
F	MATL WAS ALCLAD - 61AR-T		
G	CHG'D BEND ON BEAD. NO WT. CHG.	4-21-42	
H	IN REQ/AIRPLANE BLOCK - NEXT ASSY 29F2202 WAS 29F6000 (NO WT CHG)	8-8-42	

E.O. # A48158

Ⓐ

ASSY	A	B	C
-0	72	71½	18
-2	71⅞	71⅞	2
-3	3 15/16	3 15/16	1
Ⓑ -4	11 13/16	11 7/16	3
-5	15 13/16	15 7/16	4
Ⓒ -6	60	59½	15

ASSY GROUP NO.	MODEL	NEXT ASSY	QTY
-6	PBY-5	29F2202	G
-3	PBY-5A	29F5203	5
-5	PBY-5A	29F5205	14
-4	PBY-5A	29F5204	3
-3	PBY-5	29F1441	2
-2	PBY-5	29F5124	5
-0	PBY-2	29F2202	7

REQUIREMENTS PER AIRPLANE

REPLACES — QTY REQ'D 1.000

REPLACED BY — ASSY QTY

SCALE FULL

STAMP PART NUMBER WHERE SHOWN

PART NO	STOCK	MATERIAL	SPEC	LH REQ. -0	RH REQ. -0	LH REQ. -2	RH REQ. -3	LH REQ. -4	RH REQ. -5
-6	.020 X 8¾ X 61½	ALCLAD 24ST	61AR COMOT						
-5	.020 X 8¾ X 15								
-4	.020 X 8¾ X 15								
-3	.020 X 8¾ X 5								
-2	.020 X 8¾ X 10								
-0	.020 X 8¾ X 73½	ALCLAD 24ST	61AR COMOT	1	1				

PARTS LIST PER ASSY.

FINISH CODE

Z	ANODIC TREATMENT
P	P-27 PRIMER
AP	ALUMINIZED PRIMER
C	CADMIUM PLATE

AC

NAVY NONE — HEAT TREAT

Z-P-2AP — FINISH

DRAFT — CHECK — STRUCT — WEIGHT 5.140 — DATE 2-11-42

NAME PARTITION - FURN'S - OXYGEN-CANISTER-STOWAGE

CONSOLIDATED AIRCRAFT CORP. San Diego, Calif.

OPP. HAND

SIZE D — 29F2204